HOW TO USE THIS MANUAL

0108G–01

GENERAL INFORMATION

1. GENERAL DESCRIPTION

(a) This manual is made in accordance with SAE J2008.

(b) Generally, repair operations can be separated in the following 3 main processes:
1. Diagnosis
2. Removing and Installing, Replacing, Disassembling, Installing and Checking, Adjusting
3. Final Inspection

(c) This manual explains the 1st process of ”Diagnosis” (placed in the ”Diagnostics” section), the 2nd process of ”Removing and Installing, Replacing, Disassembling, Installing and Checking, Adjusting”, but the 3rd process of ”Final Inspection” is omitted.

(d) The following essential operations are not written in this manual. However, these operations must be done in the practical situation.
(1) Operation with a jack or lift
(2) Cleaning of a removed part when necessary
(3) Visual check

2. INDEX

(a) An alphabetical INDEX is provided as a section on the end of the book to guide you to the item to be repaired.

3. PREPARATION

(a) Use of special service tools (SST) and special service materials (SSM) may be required, depending on the repairing condition. Be sure to use SST and SSM when they are required and follow the working procedure properly. A list of SST and SSM is in the Preparation section of this manual.

4. REPAIR PROCEDURES

(a) Component drawing is placed under the title when necessary.

(b) Illustrations are placed as ”disassembled parts drawing” so that it enables you to understand the fitting condition of the components.

(c) Non–reusable parts, grease applied parts, precoated parts and tightening torque are specified in the components drawing.

Example:

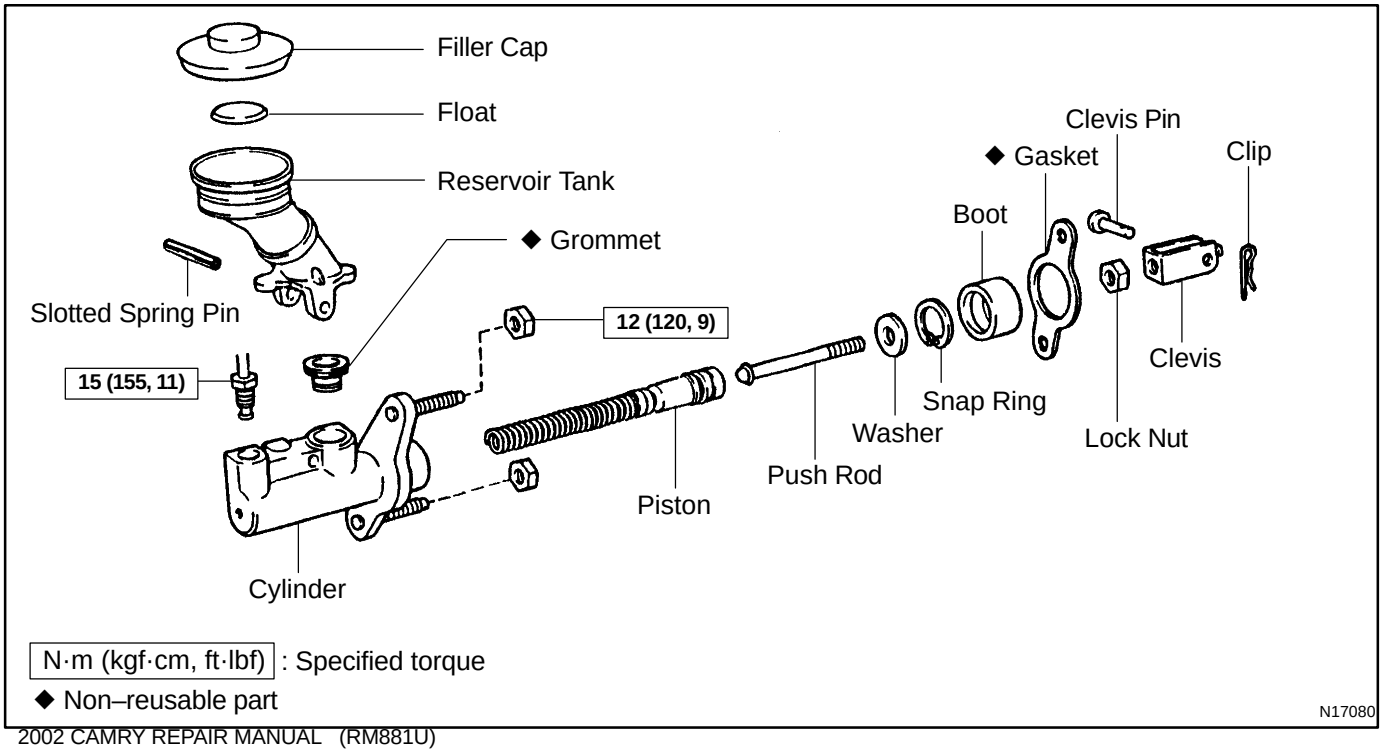

(d) Tightening torque, oil applying position, and non–reusable parts are described as important points in the procedure.

NOTICE:

There are cases where such information can only be indicated by an illustration. In that case, all the information such as torque, oil, etc. are described in the illustration.

(e) Installing procedure of operation items is performed in the reverse order of the removal, and only the important points are described.

(f) Only items with points are described in the procedure, and the operational portion and content are placed using an illustration. In the explanations, details of the operational method, standard value and notice are placed.

(g) There may be a case where the illustrations of the similar models are used. In that case the details may be different from the actual vehicle.

(h) The procedures are presented in a step–by–step format:

(1) The illustration shows what to do and where to do it.

(2) The task heading tells what to do.

(3) The detailed text tells how to perform the task and gives other information such as specifications and warnings.

Example:

Illustration:

what to do and where

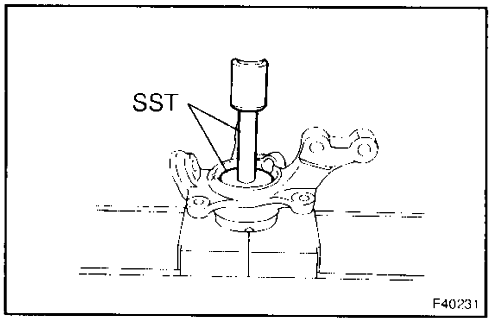

Task heading: what to do

14. INSTALL FRONT AXLE HUB LH BEARING

(a) Using SST and a press, install a new bearing to the steering knuckle. ← *Detailed test: how to perform task*

SST 09950–60020 (09951–00720), 09950–70010 (09951–07100)

Set part No.

Component part No.

D26745

HINT:

This format provides an experienced technician with a FAST TRACK to the necessary information. The task heading can be read at a glance when necessary, and the text below provides detailed information. Important specifications and warnings always stand out in bold type.

5. SERVICE SPECIFICATIONS

(a) Specifications are presented in bold type throughout the manual. You never have to leave the procedure to look up your specifications. The specifications are also found in the Service Specifications section for a quick reference.

6. TERMS DEFINITION

CAUTION	Indicate the possibility of injury to you or other people.
NOTICE	Indicate the possibility of damage to the components being repaired.
HINT	Provide additional information to help you to perform the repair efficiently.

7. SI UNIT

(a) The UNITS given in this manual are primarily expressed according to the SI UNIT (International System of Unit), and alternately expressed in the metric system and in the English System.

Example:

Torque: 30 N·m (310 kgf·cm, 22 ft·lbf)

IDENTIFICATION INFORMATION

VEHICLE IDENTIFICATION AND SERIAL NUMBERS

01041–02

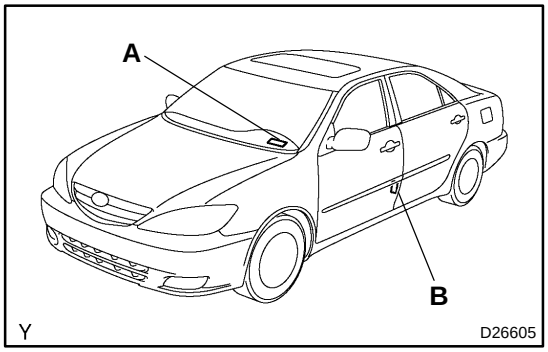

1. VEHICLE IDENTIFICATION NUMBER

(a) The vehicle identification number is stamped on the vehicle identification number plate and the certification label, as shown in the illustration.

A: Vehicle Identification Number Plate

B: Certification Label

2. FACTORY OF PRODUCTION

(a) World manufacture identifier is used to distinguish between TMC and TMMK made vehicles. The first 3 digits and letters of the vehicle identification number shows the world manufacturer identifier.

	WMI *
TMC made	JTD
TMMK made	4T1

*: World Manufacturer Identifier

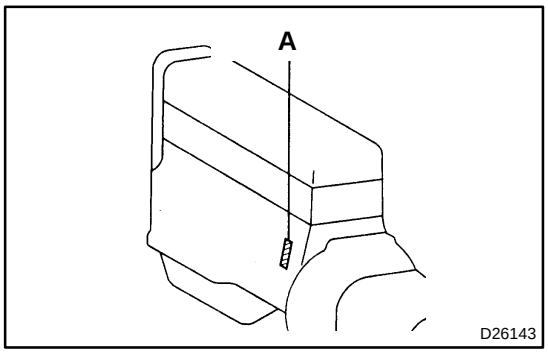

3. ENGINE SERIAL NUMBER AND TRANSAXLE SERIAL NUMBER

(a) The engine serial number is stamped on the cylinder block of the engine, and the transaxle serial number is stamped on the housing, as shown in the illustration.

A: Engine Serial Number

B: Transaxle Serial Number

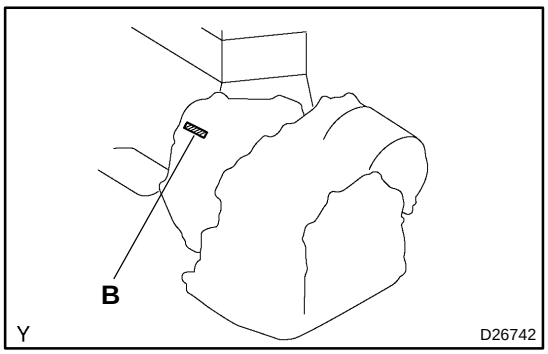

REPAIR INSTRUCTION

01042–02

PRECAUTION

1. BASIC REPAIR HINT

(a) HINTS ON OPERATIONS

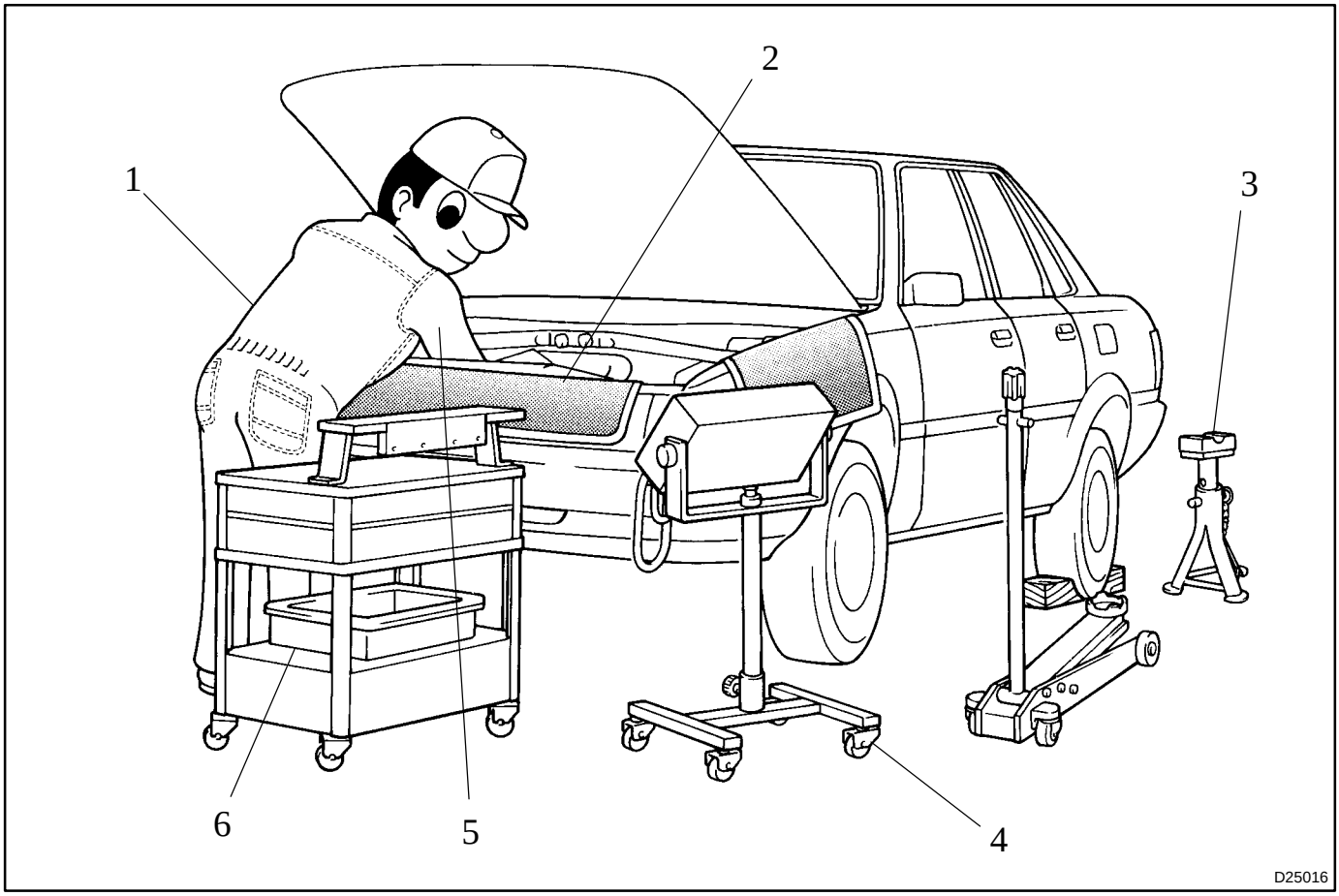

1	Looks	• Always wear a clean uniform. • Hat and safety shoes must be worn.
2	Vehicle protection	• Set a grill cover, fender cover, seat cover and floor mat before starting the operation.
3	Safe operation	• In case of working with 2 or more persons, be sure to check safety of one another. • When working with the engine running, pay attention to the ventilation of the workshop. • In case of operating on a high–temperature parts, rotating, moving and vibrating parts, pay attention to not burn or injure yourself. • When jacking up the vehicle, be sure to support the specified location with a safety stand. • When lifting up the vehicle, apply a safety equipment.
4	Preparation of tools and measuring gauge	• Before starting operation, prepare a tool stand, SST, gauge, oil, shop rag and parts for replacement.
5	Removal and installation, disassembly and assembly operations	• Diagnose with a thorough understanding of the trouble phenomenon and perform effective operations. • Before removing the parts, check the assembly for general condition, deformation and damage. • When the structure is complicated, take a note or put matchmarks so as not to make mistakes that affect the function of the parts. • Clean and wash the removed parts if necessary, and assemble them after a thorough check.
6	Removed parts	• Place the removed parts in the correct order to avoid mixing up or making them dirty. • As for non–reusable parts such as gasket, O–ring, and self lock nut, change them to new ones following the instruction of this manual. • Sort out the parts for replacement in a box and show them to the customer.

(b) JACKING UP AND SUPPORTING VEHICLE

(1) Care must be taken when jacking up and supporting the vehicle. Be sure to lift and support the vehicle at the proper locations (See page 01–18).

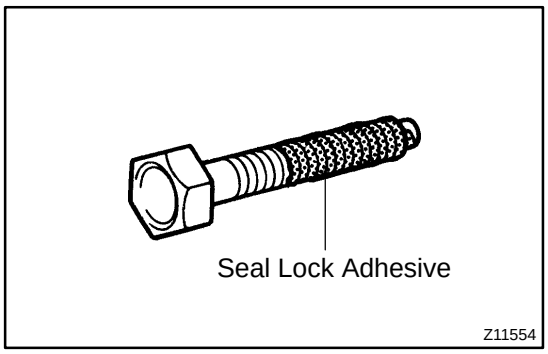

(c) PRECOATED PARTS

(1) Precoated parts are bolts, nuts, etc. that are coated with a seal lock adhesive at the factory.

(2) If a precoated part is retightened, loosened or caused to move in any way, it must be recoated with the specified adhesive.

(3) When reusing precoated parts, clean off the old adhesive and dry the part with compressed air. Then apply the specified seal lock adhesive to the bolt, nut or threads.

NOTICE:

Perform the torque checking with the lower limit value of the torque tolerance.

(4) Depending on the seal lock agent to apply, there may be a case where it is necessary to leave it for a specified time until it hardens.

(d) GASKETS

(1) When necessary, use a sealer on gaskets to prevent leaks.

(e) BOLTS, NUTS AND SCREWS

(1) Carefully observe all the specifications for tightening torques. Always use a torque wrench.

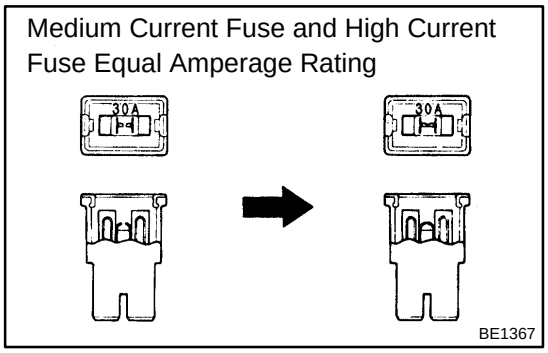

(f) FUSES

(1) When replacing fuses, be sure that a new fuse has the correct amperage rating. DO NOT exceed the rating, or use one with a lower rating.

Illustration	Symbol	Part Name	Abbreviation
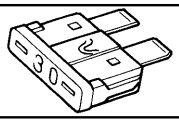 BE5594	 IN0365	FUSE	FUSE
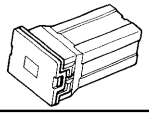 BE5595	 IN0366	MEDIUM CURRENT FUSE	M–FUSE
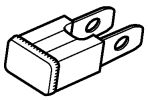 D27353	 IN0367	HIGH CURRENT FUSE	H–FUSE

V35001

(g) CLIPS

(1) The removal and installation methods of typical clips used in body parts are shown in the table below.

HINT:

If the clip is damaged during the operation, always replace it with a new clip.

Shape (Example)	Removal/Installation
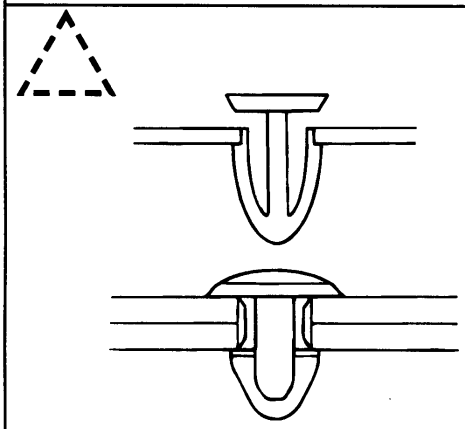	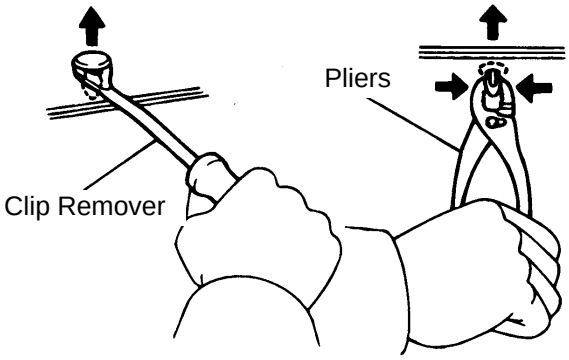
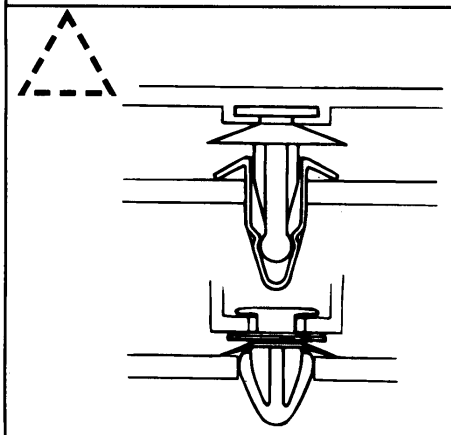	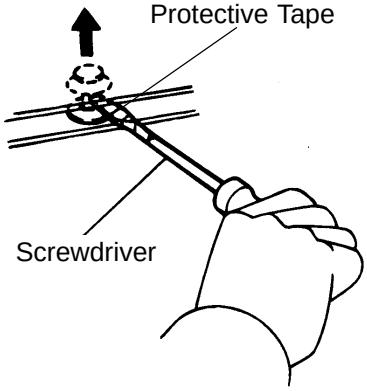
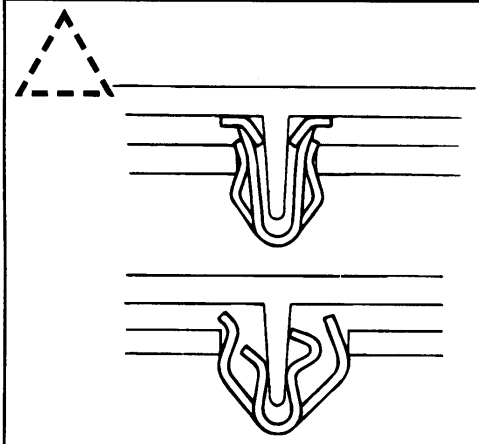	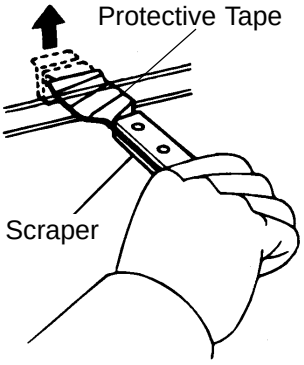

D25786

Shape (Example)	Removal/Installation
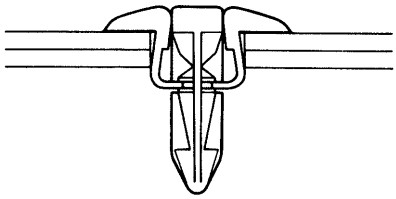	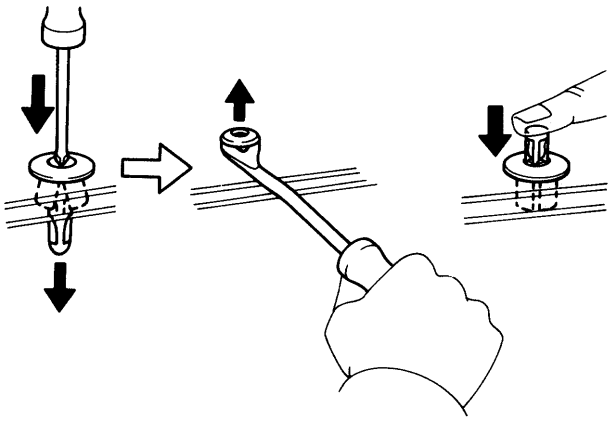
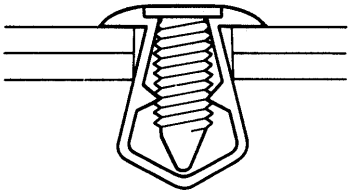	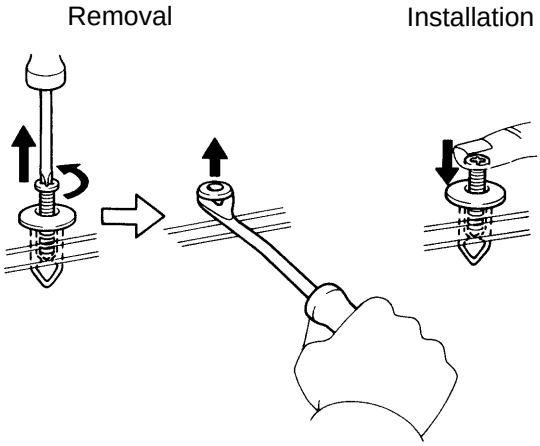

V00012

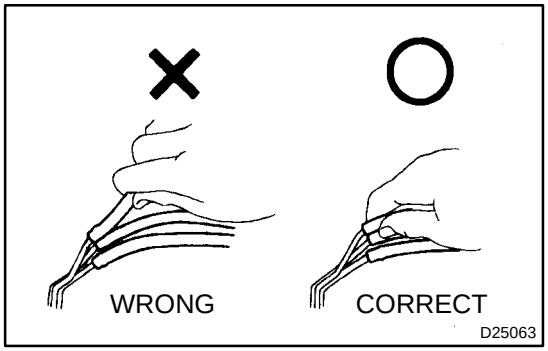

(h) REMOVAL AND INSTALLATION OF VACUUM HOSES

(1) To disconnect vacuum hoses, pull them by holding the end, not the middle of the hose.

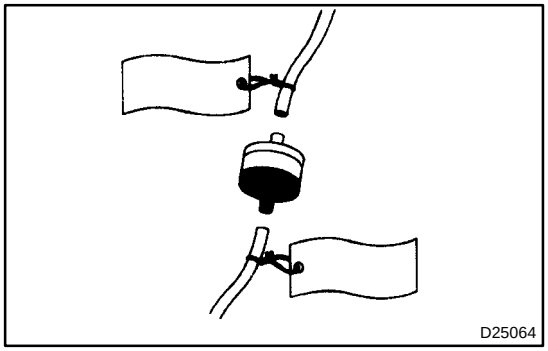

(2) When disconnecting vacuum hoses, use tags to identify where they should be reconnected.

(3) After completing the job, make a double check whether the vacuum hoses are properly connected. A label under the hood shows the proper layout.

(4) When using a vacuum gauge, never force the hose onto a connector that is too large. Use a step–down adapter for adjustment. Once the hose has been stretched, it may leak air.

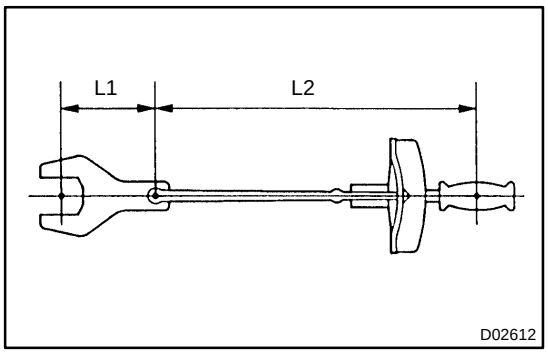

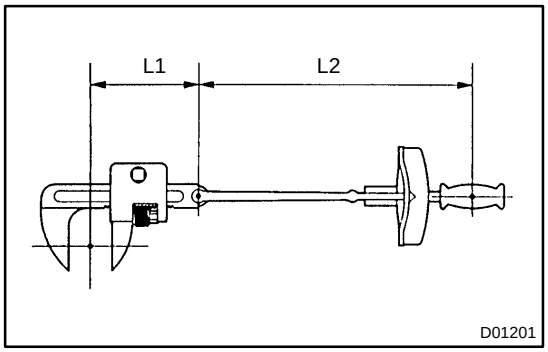

(i) TORQUE WHEN USING TORQUE WRENCH WITH EXTENSION TOOL

(1) When a SST or extension tool is combined with the torque wrench to extend its entire length, if you tighten until the reading of the torque wrench reaches the specified torque value, the actual torque becomes excessive.

(2) In this manual, only the specified torque is described. In case of using SST or extension tool, calculate the reading of the torque wrench by the following formula.

(3) Formula T'=T x L2/(L1 + L2)

T'	Reading of torque wrench {N·m (kgf·cm, ft·lbf)}
T	Torque {N·m (kgf·cm, ft·lbf)}
L1	Length of SST or extension tool (cm)
L2	Length of torque wrench (cm)

2. FOR VEHICLES EQUIPPED WITH SRS AIRBAG AND SEAT BELT PRETENSIONER

HINT:

CAMRY is equipped with an SRS (Supplemental Restraint System), such as the driver airbag, front passenger airbag, side airbag, curtain shield airbag and seat belt pretensioner.

Failure to carry out the service operations in the correct sequence could cause the supplemental restraint system to unexpectedly deploy during servicing. It may lead to a serious accident.

Furthermore, if a mistake is made in servicing the supplemental restraint system, it is possible that the SRS will fail to operate when required. Before servicing (including removal or installation of parts, inspection or replacement), be sure to read the following items carefully. Then follow the correct procedure described in this manual.

(a) GENERAL NOTICE

(1) Malfunction symptoms of the supplemental restraint system are difficult to confirm, so the diagnostic trouble codes become the most important source of information when troubleshooting. When troubleshooting the supplemental restraint system, always check the diagnostic trouble codes before disconnecting the battery (See page 05–690).

(2) Work must be started after 90 seconds from the time the ignition switch is turned to the "LOCK" position and the negative (–) terminal cable is disconnected from the battery.
(The supplemental restraint system is equipped with a back–up power source, so, if work is started within 90 seconds after disconnecting the negative (–) terminal cable from the battery, the SRS may deploy.)
When the negative (–) terminal cable is disconnected from the battery, memory of the clock and audio systems will be cancelled. So, before starting work, make a record of the memorized contents in each memory system. Then, when work is finished, reset the clock and audio systems as before. To avoid erasing the memory in each memory system, never use a back–up power supply from another battery.

(3) Even in case of a minor collision where the SRS does not deploy, the horn button assembly, instrument panel passenger airbag assembly, front seat airbag assembly, curtain shield airbag assembly and seat belt pretensioner should be inspected (See pages 60–17, 60–34, 60–44, 60–50 and 61–9).

(4) Never use SRS related parts from another vehicle. When replacing parts, replace them with new parts.
(5) Before repairs, remove the airbag sensor if shocks are likely to be applied to the sensor during repairs.
(6) Never disassemble and repair the airbag sensor assembly, horn button assembly, instrument panel passenger airbag assembly, front seat airbag assembly and the curtain shield airbag assembly or seat belt pretensioner.
(7) If the airbag sensor assembly, the side airbag sensor assembly, the horn button assembly, the instrument panel passenger airbag assembly, the front seat airbag assembly or the curtain shield airbag assembly have been dropped, or if there are cracks, dents or other defects in the case, bracket or connector, replace them with new ones.
(8) Do not directly expose the airbag sensor assembly, the horn button assembly, the instrument panel passenger airbag assembly, the front seat airbag assembly, the curtain shield airbag assembly or the seat belt pretensioner to hot air or flames.
(9) Use a volt/ohmmeter with high impedance (10 kΩ/V minimum) for troubleshooting of an electrical circuit.
(10) Information labels are attached to the SRS components. Follow the instructions on the notices.
(11) After work on the supplemental restraint system is completed, check the SRS warning light (See page 05–690).

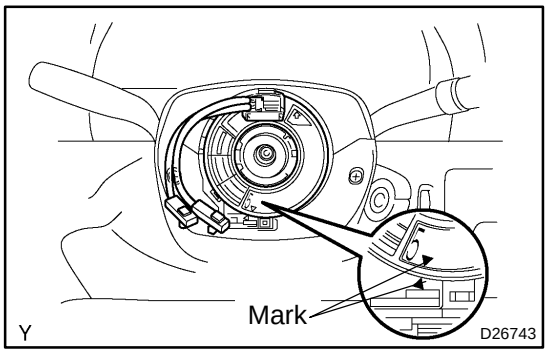

(b) SPIRAL CABLE (in Combination Switch)
(1) The steering wheel must be fitted correctly to the steering column with the spiral cable at the neutral position, otherwise cable disconnection and other troubles may occur. Refer to page 60–25 on this manual concerning the correct installation of the steering wheel.

(c) HORN BUTTON ASSEMBLY (with Airbag)
(1) When removing the horn button assembly or handling a new horn button, it should be placed with the pad top surface facing upward. Placing it with the pad surface facing downward may lead to a serious accident if the airbag accedentally inflates. Also, do not place the horn button on top of one another.
(2) Never measure the resistance of the airbag squib (This may cause the airbag to inflate, which is very dangerous).
(3) Grease should not be applied to the horn button assembly, and the pad should not be cleaned with detergents of any kinds.
(4) Store the horn button assembly where the ambient temperature remains below 93˚C (200˚F), without high humidity and away from electrical noise.
(5) When using electric welding, first disconnect the airbag connector (2 yellow pins) under the steering column near the combination switch connector before starting work.

(6) When disposing of the vehicle or the horn button assembly alone, the airbag should be deployed using an SST before disposal (See page 60–17).
Perform the operation in a safe place away from electrical noise.

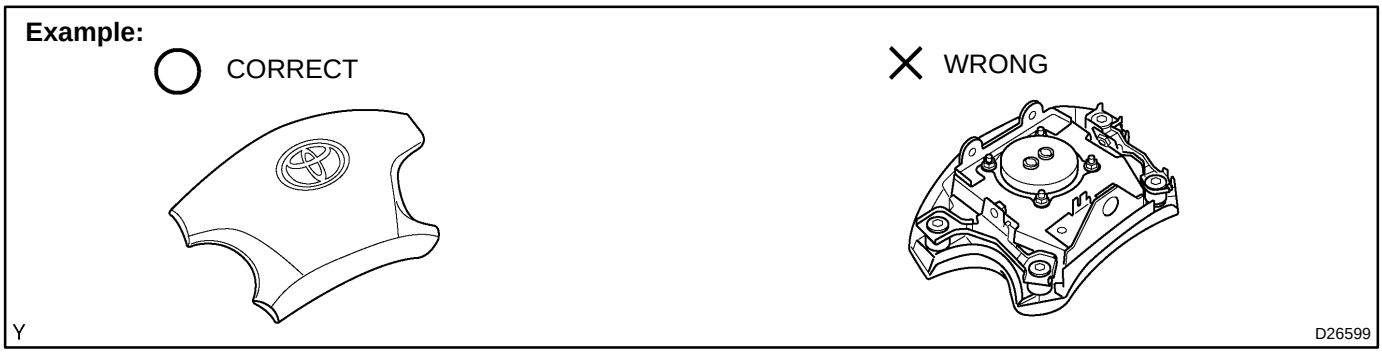

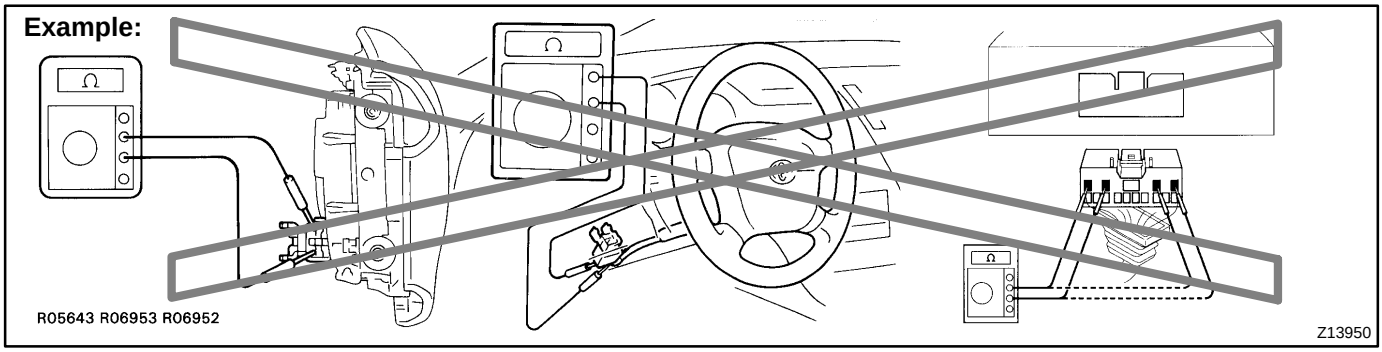

(d) INSTRUMENT PANEL PASSENGER AIRBAG ASSEMBLY

(1) Always store a removed or new instrument panel passenger airbag assembly with the airbag inflation direction facing upward. Placing the airbag assembly with the airbag inflation direction facing downward could cause a serious accident if the airbag inflates.

(2) Never measure the resistance of the airbag squib (This may cause the airbag to inflate, which is very dangerous).

(3) Grease should not be applied to the instrument panel passenger airbag assembly, and the airbag door should not be cleaned with detergents of any kind.

(4) Store the airbag assembly where the ambient temperature remains below 93˚C (200˚F), without high humidity and away from electrical noise.

(5) When using electric welding, first disconnect the airbag connector (2 yellow pins) installed on the assembly before starting work.

(6) When disposing of a vehicle or the airbag assembly alone, the airbag should be deployed using an SST before disposal (See page 60–34).
Perform the operation in a safe place away from electrical noise.

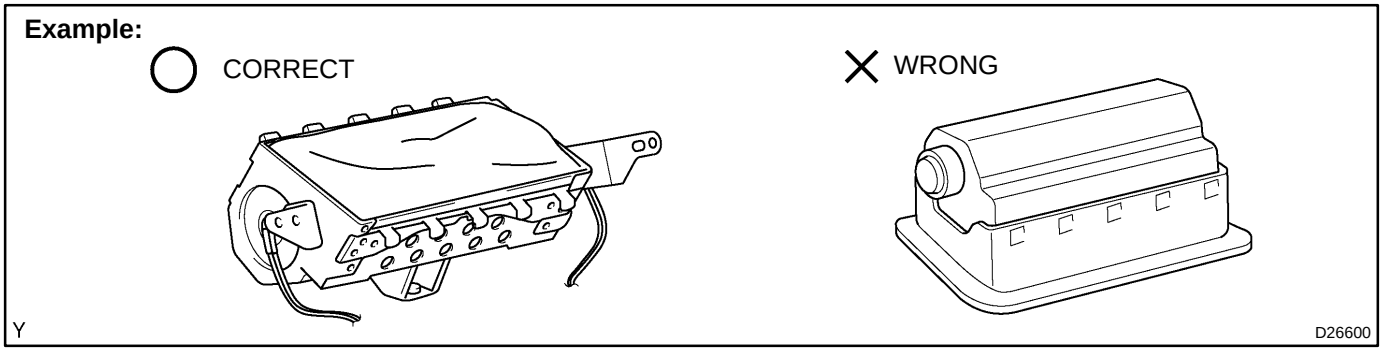

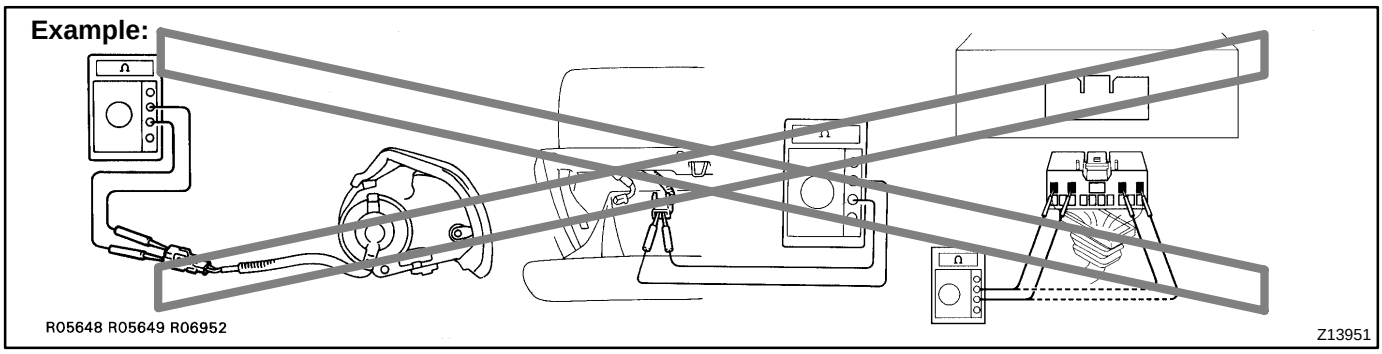

(e) FRONT SEAT AIRBAG ASSEMBLY

(1) Always store a removed or new front seat airbag assembly with the airbag inflation direction facing upward. Placing the airbag assembly with the airbag inflation direction facing downward could cause a serious accident if the airbag inflates.

(2) Never measure the resistance of the airbag squib (This may cause the airbag to inflate, which is very dangerous).

(3) Grease should not be applied to the front seat airbag assembly, and the airbag door should not be cleaned with detergents of any kind.

(4) Store the airbag assembly where the ambient temperature remains below 93˚C (200˚F), without high humidity and away from electrical noise.

(5) When using electric welding, first disconnect the airbag connector (2 yellow pins) installed on the assembly before starting work.

(6) When disposing of a vehicle or the side airbag assembly alone, the airbag should be deployed using an SST before disposal (See page 60–50).
Perform the operation in a safe place away from electrical noise.

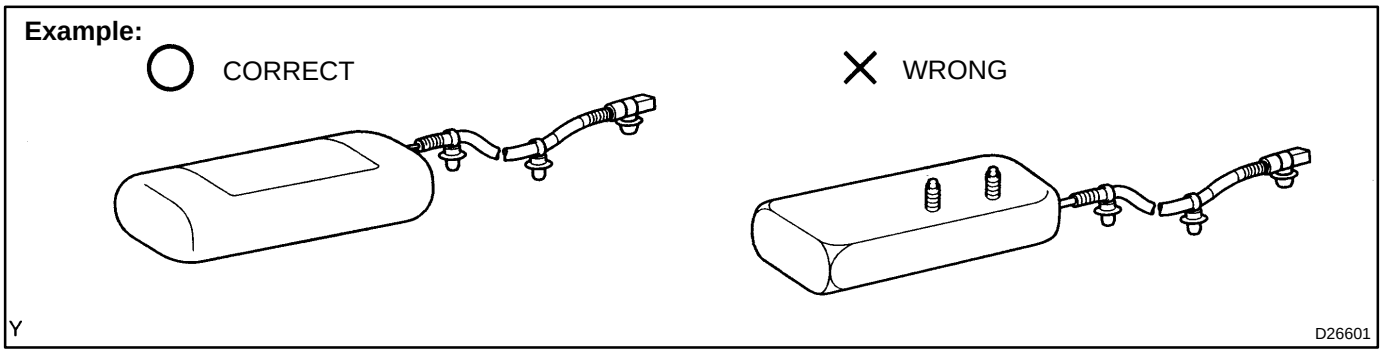

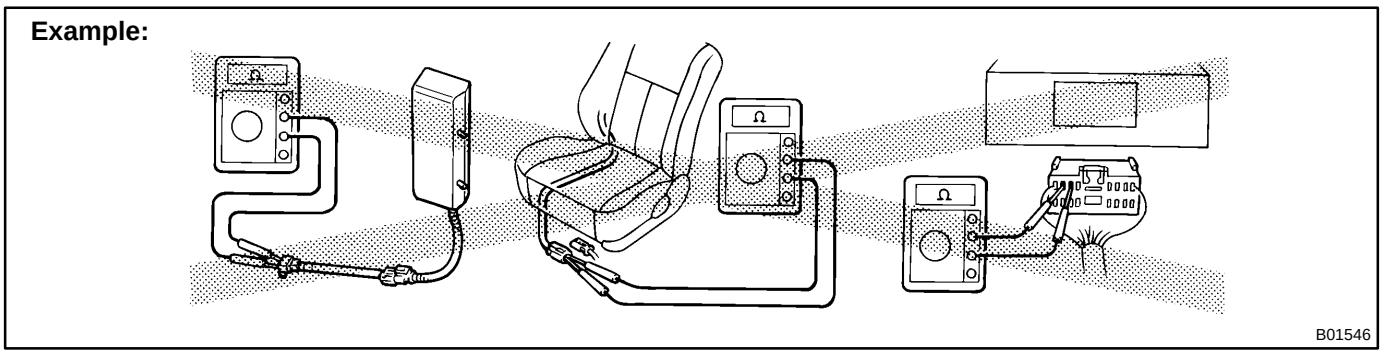

(f) CURTAIN SHIELD AIRBAG ASSEMBLY

(1) Always store the removed or new curtain shield airbag assembly in a clear plastic bag, and keep it in a safe place.

NOTICE:

Protection bag is not re–useable.

CAUTION:

Never disassemble the curtain shield airbag assembly.

(2) Never measure the resistance of the airbag squib (This may cause the airbag to inflate, which is very dangerous).

(3) Grease should not be attached to the curtain shield airbag assembly, and the surface should not be cleared with detergents of any kind.

(4) Store the airbag assembly where the ambient temperature remains below 93 °C (200 °F), without high humidity and away from electrical noise.

(5) When using electric welding, first disconnect the airbag connector (2 yellow 2 pins) into the instrument panel before starting work.

(6) When disposing of a vehicle or the curtain shield airbag assembly alone, the airbag should be deployed using an SST before disposal (See page 60–44). Perform the operation in a safe place away from electrical noise.

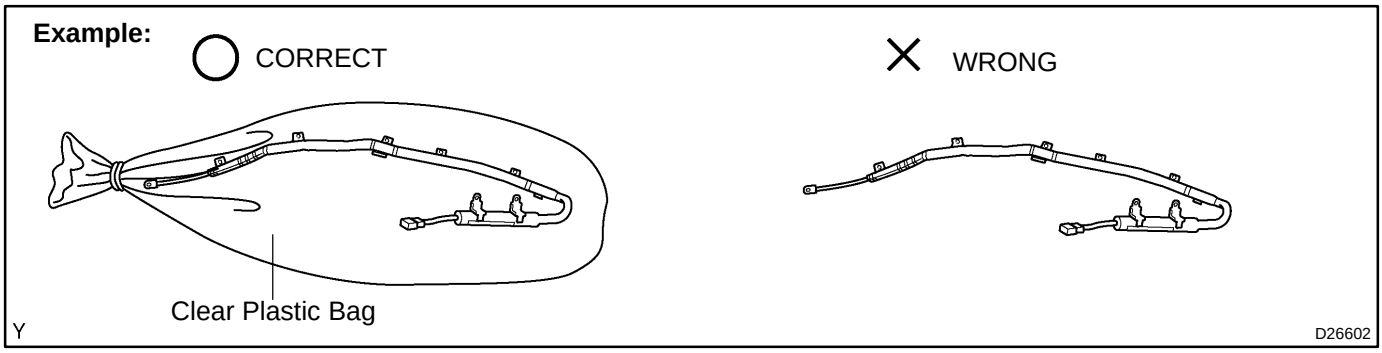

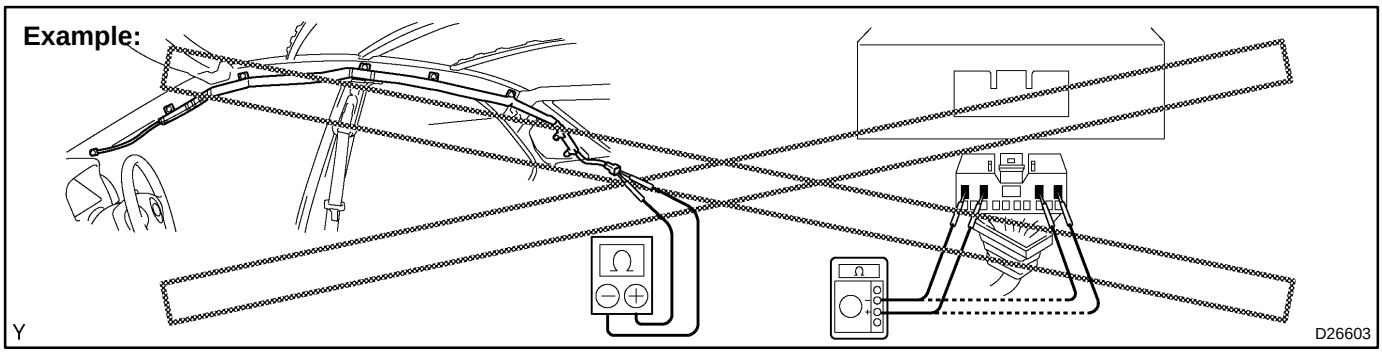

(g) SEAT BELT PRETENSIONER

(1) Never measure the resistance of the seat belt pretensioner (This may cause the seat belt pretensioner to activate, which is very dangerous).

(2) Never disassemble the seat belt pretensioner.

(3) Never install the seat belt pretensioner to another vehicle.

(4) Store the seat belt pretensioner where the ambient temperature remains below 80°C (176°F) without high humidity and away from electrical noise.

(5) When using electric welding, first disconnect the connector (2 yellow pins) before starting work.

(6) When disposing of a vehicle or the seat belt pretensioner alone, the seat belt pretensioner should be activated before disposal (See page 61–9). Perform the operation in a safe place away from electrical noise.

(7) The seat belt pretensioner is hot after activation, so let it cool down sufficiently before disposal. Never apply water to cool down the seat belt pretensioner.

(8) Oil or water should not be put on the front seat outer belt, and the front seat outer belt should not be cleaned with detergents of any kind.

Example:

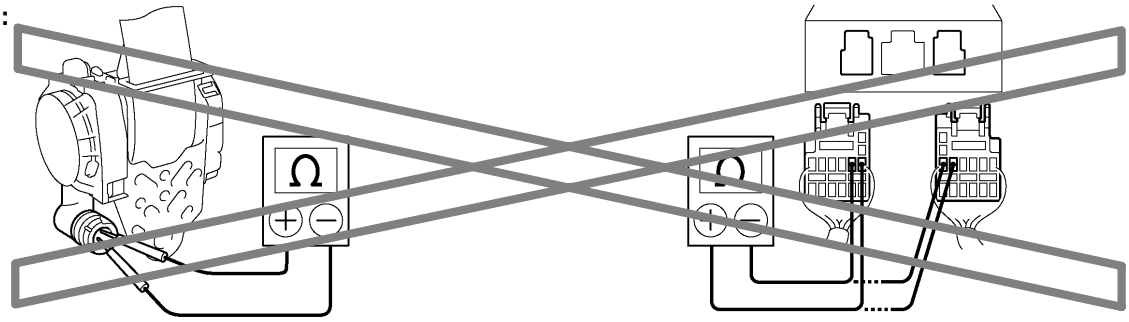

Y D26744

(h) AIRBAG SENSOR ASSEMBLY

(1) Never reuse the airbag sensor assembly involved in a collision where the SRS has deployed.

(2) The connectors to the airbag sensor assembly should be connected or disconnected with the sensor mounted on the floor. If the connectors are connected or disconnected while the airbag sensor assembly is not mounted to the floor, it could cause an undesired ignition of the supplemental restraint system.

(3) Work must be started after 90 seconds from the time the ignition switch is turned to the ”LOCK” position and the negative (–) terminal cable is disconnected from the battery, even if only loosening the set bolts of the airbag sensor assembly.

(i) WIRE HARNESS AND CONNECTOR

(1) The SRS wire harness is integrated with the instrument panel wire harness assembly. All the connectors in the system are in a standard yellow color. If the SRS wire harness becomes disconnected or the connector becomes broken due to an accident, etc., repair or replace it.

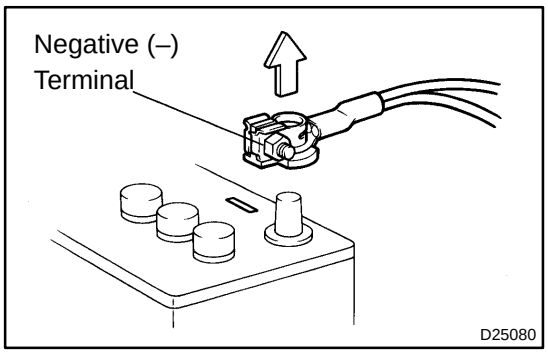

3. ELECTRONIC CONTROL

(a) REMOVAL AND INSTALLATION OF BATTERY TERMINAL

(1) Before performing electrical work, disconnect the battery negative (–) terminal cable beforehand so as to prevent burnt–out damage by short.

(2) When disconnecting and installing the terminal cable, turn the ignition switch and lighting switch OFF, and loosen the terminal nut completely. Perform these operations without twisting or prying the terminal.

(3) When the battery terminal is removed, all the memories of the clock, radio, DTCs, etc. will be erased. So before removing it, check them and note them down.

(4) When the battery terminal is disconnected, the sliding roof position memory is erased.
Make sure to reset the sliding roof zero pointSee page 74–7.

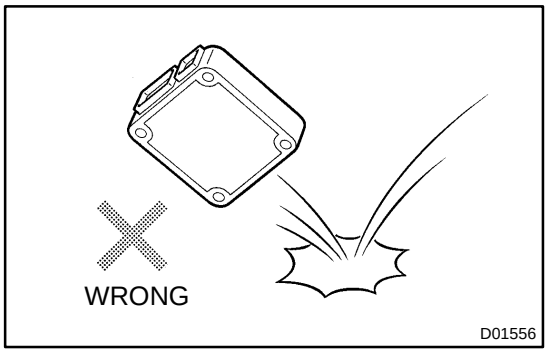

(b) HANDLING OF ELECTRONIC PARTS

(1) Do not open the cover or case of the ECU unless absolutely necessary (If the IC terminals are touched, the IC may be destroyed by static electricity).

(2) To disconnect electronic connectors, pull the connector itself, not the wires.

(3) Be careful not to drop electronic components, such as sensors or relays. If they are dropped on a hard floor, they should be replaced and not be reused.

(4) When cleaning the engine with steam, protect the electronic components, air filter and emission–related components from water.

(5) Never use an impact wrench to remove or install temperature switches or temperature sensors.

(6) When checking the continuity at the wire connector, insert the tester probe carefully to prevent terminals from bending.

4. REMOVAL AND INSTALLATION OF FUEL CONTROL PARTS

(a) PLACE FOR REMOVING AND INSTALLING OF FUEL SYSTEM PARTS

(1) Work in a place with good air ventilation and without anything flammable such as welder, grinder, drill, electric motor or stove in the surroundings.

(2) Never work in a place such as a pit or nearby a pit, as there is a possibility that vaporized fuel is filled in those places.

(b) REMOVING AND INSTALLING OF FUEL SYSTEM PARTS
  (1) Prepare a fire extinguisher before starting the operation.
  (2) For prevention of the static electricity, install a ground on the fuel changer, vehicle and fuel tank, and do not spray much water so as to prevent slipping.
  (3) Never use any electric equipment like an electric motor or a working light as they may cause sparks or high temperature.
  (4) Never use an iron hammer, as it may cause sparks.
  (5) Dispose of the shop rag separately from any fuel deposit.

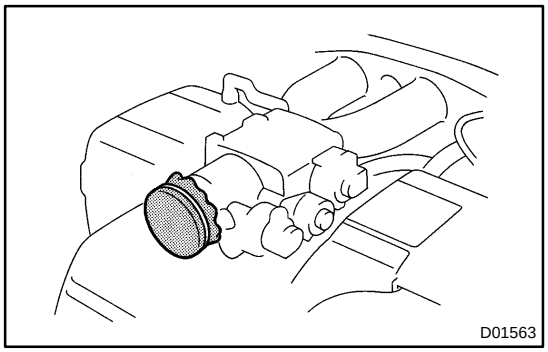
D01563

5. REMOVAL AND INSTALLATION OF ENGINE INTAKE PARTS

(a) If any metal tip is mixed in the inlet pass, that may give a bad effect to the engine and turbocharger.
(b) When removing and installing the inlet system parts, close the opening of the removed inlet system parts and the engine with a clean shop rag or gummed tape.
(c) When installing the inlet system parts, check that there is no mixing of a metal tip.

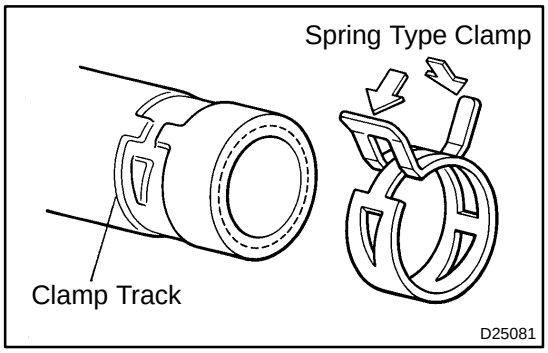

D25081

6. HANDLING OF HOSE CLAMPS

(a) Before removing the hose, check the clamp position to restore it securely.
(b) Change a deformed or dented clamp into a new one.
(c) In case of reusing the hose, install the clamp on the hose where it has a clamp track.
(d) For a spring type clamp, make adjustment by adding force to the arrow mark direction after the installation.

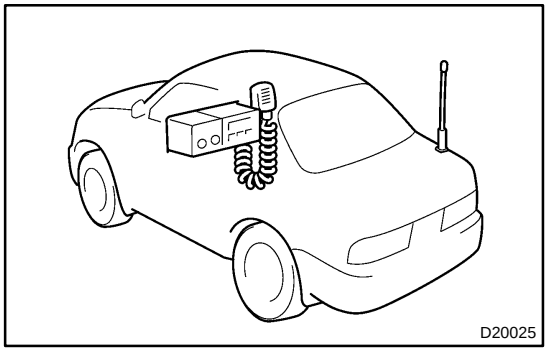
D20025

7. FOR VEHICLES EQUIPPED WITH MOBILE COMMUNICATION SYSTEM

(a) Install an antenna as far as possible away from the ECU and sensors of the vehicle's electronic systems.
(b) Install an antenna feeder at least 20 cm (7.87 in.) away from the ECU and sensors of the vehicle's electronic systems. For details of the ECU and sensors locations, refer to the section on the applicable component.
(c) Prevent the antenna feeder from getting entangled with the other wirings, and keep the antenna feeder separately from the other wirings as much as possible.
(d) Check that the antenna and feeder are correctly adjusted.
(e) Do not install any powerful mobile communication system.

8. FOR VEHICLES EQUIPPED WITH TRACTION CONTROL (TRAC) SYSTEM

(a) NOTICES WHEN USING 2–WHEEL DRUM TESTER

(1) When using a 2–wheel drum tester such as a speedometer tester, a combination tester of speedometer and brake, chassis dynamometer or else, always turn the TRAC system off via the TRAC OFF switch before measurement.

NOTICE:

TRAC system OFF condition can be confirmed by the indication, "TRAC OFF" of the warning light in the combination meter.

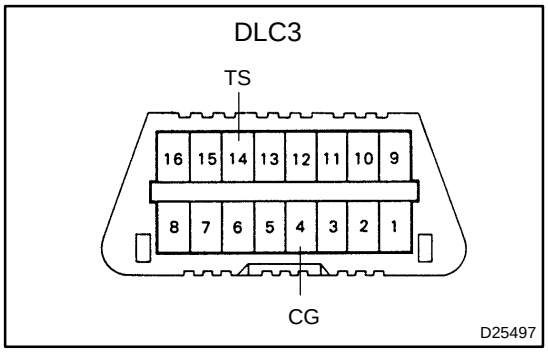

9. FOR VEHICLES EQUIPPED WITH VEHICLE SKID CONTROL (VSC) SYSTEM

(a) NOTICES WHEN USING DRUM TESTER

(1) When using a drum tester, be sure to start the engine with the ignition OFF, and connect SST to the terminals TS and CG of the DLC3 before measurement in order to prohibit the VSC operation.

SST 09843–18040

NOTICE:

- **Confirm that the VSC warning light blinks.**
- **VSC system will be reset when the engine is restarted.**
- **Fasten the vehicle with lock chains.**

(b) NOTICES OF RELATED OPERATIONS TO VSC

(1) Do not carry out unnecessary installation and removal, because it might disorder the adjustment of related parts to VSC.

(2) Be sure to carry out the preparation for operation and the confirmation of operation completion, in accordance with the instruction of the text, when the related operations to VSC are performed.

10. FOR VEHICLES EQUIPPED WITH CATALYTIC CONVERTER

CAUTION:

If large amount of unburned gasoline flows into the converter, it may cause overheating and a fire hazard. To prevent this, observe the following precautions.

(a) Use only unleaded gasoline.

(b) Avoid prolonged idling.
Avoid running the engine at idle speed for more than 20 minutes.

(c) Avoid a spark jump test.

(1) Perform a spark jump test only when absolutely necessary. Perform this test as rapidly as possible.

(2) While testing, never race the engine.

(d) Avoid a prolonged engine compression measurement.
Engine compression measurements must be performed as rapidly as possible.

(e) Do not run the engine when the fuel tank is nearly empty. This may cause the engine to misfire and create an extra load on the converter.

01043–02

VEHICLE LIFT AND SUPPORT LOCATIONS

1. NOTICE ABOUT VEHICLE CONDITION WHEN JACKING UP

(a) As a rule, the vehicle must be unloaded when jacking up. Never jack up or lift up the vehicle loaded with things of heavy weight.

(b) When removing any parts of heavy weight like the engine and transmission, the center of gravity of the vehicle moves. Place a balance weight so as to keep it from rolling, or hold the jacking support location using the mission jack.

2. NOTICE FOR USING 4 POST LIFT

(a) Follow the instruction manual for a safety operation.

(b) Do not damage tires or wheels with a free wheel beam.

(c) Using a wheel stopper, fix the vehicle.

3. NOTICE FOR USING JACK AND SAFETY STAND

(a) Work in the flat place using a wheel stopper at all times.

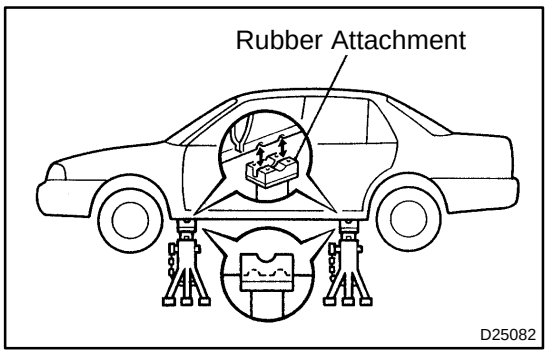

(b) Use a safety stand with a rubber attachment, as shown in the illustration.

(c) Support the specified location with the jack and safety stand accurately.

(d) When jacking up the front wheels, release the parking brake and place wheel stoppers only behind the rear wheels. When jacking up the rear wheels, place wheel stoppers only in front of the front wheels.

(e) Do not work or leave the vehicle supported only by a jack. Be sure to support the vehicle with a safety stand.

(f) When jacking up only the front wheels or only the rear wheels, place wheel stoppers to both sides of the wheels that contact ground.

(g) When jacking down the vehicle with its front wheels jacked up, release the parking brake and place wheel stoppers only in front of the rear wheels. When jacking down the vehicle with its rear wheels jacked up, place wheel stoppers only behind the front wheels.

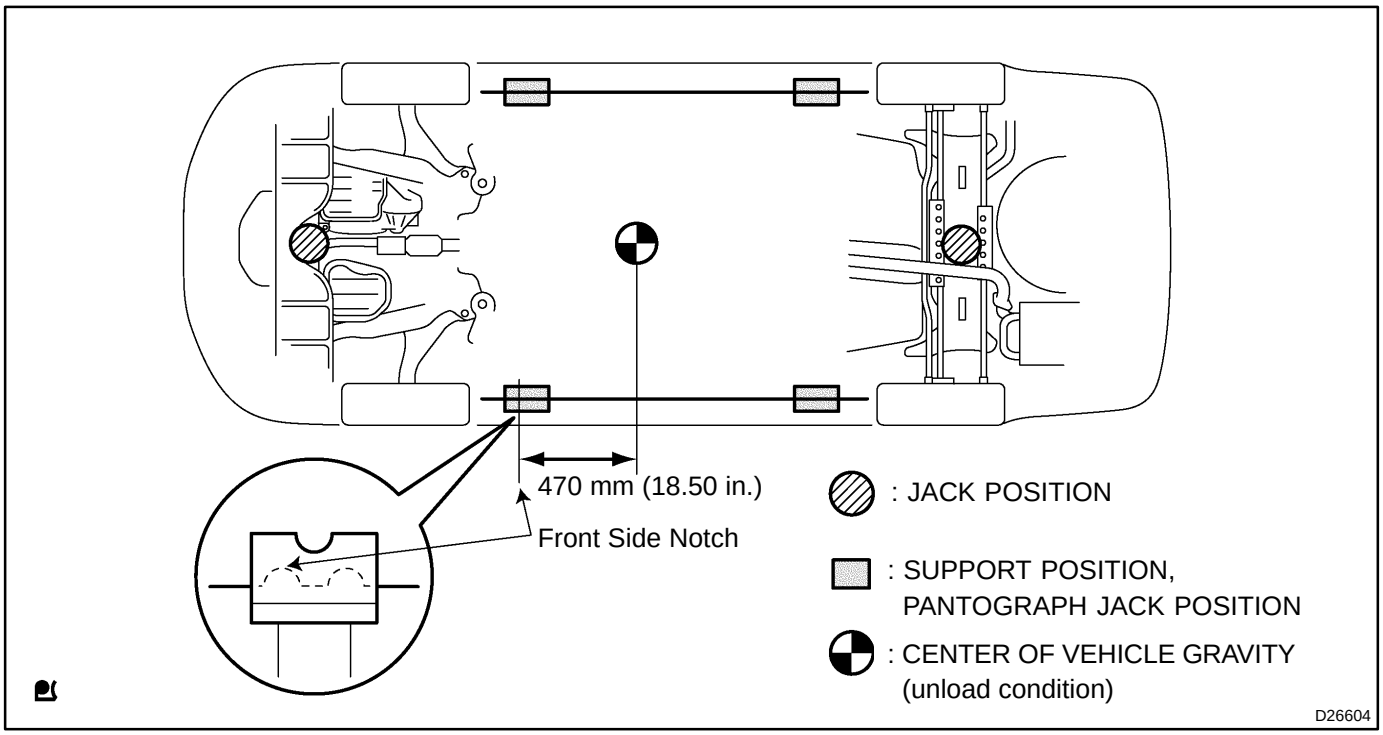

4. NOTICE FOR USING SWING ARM TYPE LIFT

(a) Follow the instruction manual of the lift for a safe operation.
(b) Use a cradle with a rubber attachment, as shown in the illustration.
(c) Set in the vehicle so as to make its center of gravity as close as possible to the center of the lift. (”L” becomes short.)
(d) place the vehicle horizontally by adjusting the height of the cradle, and match the groove of the cradle and the safety stand support location accurately.
(e) Be sure to lock the swing arm during the operation.
(f) Lift the vehicle up until the tires float, and shake the vehicle to make sure that the vehicle is stable.

5. NOTICE FOR USING PLATE TYPE LIFT

(a) Follow the instruction manual of the lift for a safe operation.
(b) Use a plate lift attachment.
(c) Be sure to set the vehicle to the specified position.

Right and left set position	• Place the vehicle over the center of the lift.
Front and rear set position	• Align the cushion gum ends of the plate with the attachment lower ends (A and C). • Align the attachment upper end (B) with the rocker flange front side notch.

(d) Lift the vehicle up until the tires float a bit, and shake the vehicle to make sure that the vehicle is stable.

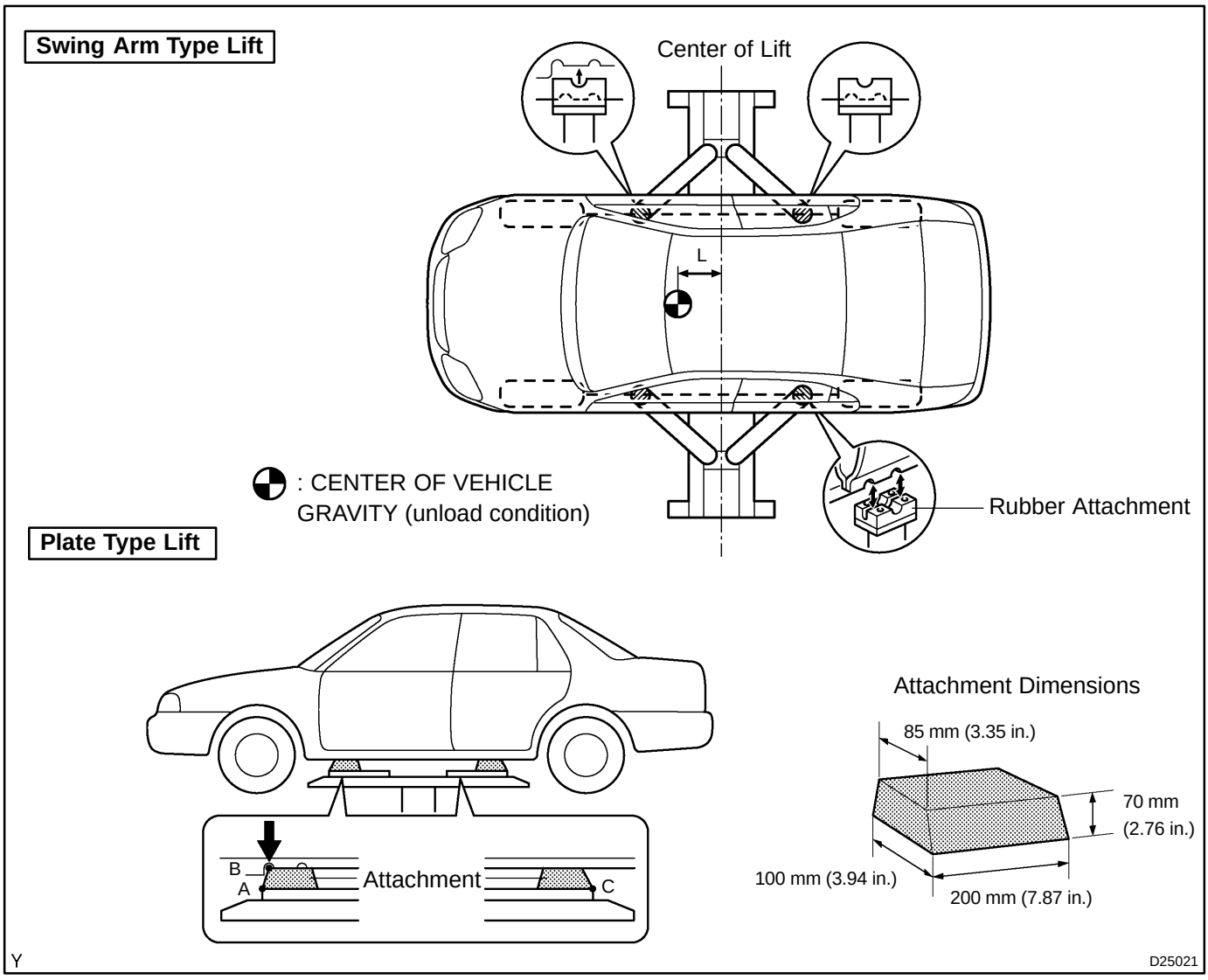

HOW TO TROUBLESHOOT ECU CONTROLLED SYSTEMS

01044–02

GENERAL INFORMATION

A large number of ECU controlled systems are used in CAMRY. In general, the ECU controlled system is considered to be a very intricate system requiring high level of technical knowledge and expert skill to troubleshoot. The fact is, however, that if you proceed to inspect the circuits one by one, troubleshooting of these systems is not complex. If you have adequate understanding of the system and basic knowledge of electricity, accurate diagnosis and necessary repair can be performed to locate and fix the problem. This manual is designed through emphasis of the above standpoint to help service technicians perform an accurate and effective troubleshooting, and is compiled for the following major ECU controlled systems.
The troubleshooting procedure and how to make use of it are described on the following pages.

System	Page
1. SFI System (2AZ–FE)	05–1
2. SFI System (1MZ–FE)	05–173
3. ABS with EBD System (BOSCH made)	05–360
4. ABS with EBD System (DENSO made)	05–401
5. ABS with EBD & BA & TRAC & VSC System	05–448
6. Electronic Controlled Automatic Transmission [ECT]	05–548
7. Air Conditioning System	05–616
8. Supplemental Restraint System	05–687
9. Lighting System	05–896
10.Audio System	05–928
11.Navigation System	05–991
12.Combination Meter	05–1070
13.Power Door Lock Control System	05–1132
14.Wireless Door Lock Control System	05–1148
15.Engine Immobiliser System	05–1165
16.Theft Deterrent System	05–1182
17.Body Multiplex Communication System	05–1196
18.Cruise Control System	05–1209
19.Power Window Control System	05–1239

FOR USING OBDII SCAN TOOL OR HAND–HELD TESTER

HINT:

- Before using the scan tool or tester, the scan tool's instruction book or tester's operator manual should be read thoroughly.
- If the scan tool or tester cannot communicate with the ECU controlled systems when you have connected the cable of the tester to the DLC3 with the ignition switch and tester turned ON, there is a problem on the vehicle side or tester side.
  (1) If the communication is normal when the tester is connected to another vehicle, inspect the diagnosis data link line (Bus⊕line) or ECU power circuit of the vehicle.
  (2) If the communication is still impossible when the tester is connected to another vehicle, the problem is probably in the tester itself, so perform the Self Test procedures outlined in the Tester Operator's Manual.

01045–02

HOW TO PROCEED WITH TROUBLESHOOTING

HINT:

Carry out a troubleshooting in accordance with the procedure on the following page. Here, only the basic procedure is shown. Details are provided in the Diagnostics section, showing the most effective methods for each circuit. Confirm the troubleshooting procedures first for the relevant circuit before beginning the troubleshooting of that circuit.

1	Vehicle brought to workshop

2	Customer problem analysis

(a) Ask the customer about the conditions and environment when the problem occurred.

3	Symptom confirmation and DTC (and freeze frame data) check

(a) Check the battery positive voltage.
Voltage: 10 – 14 V (Engine stopped)

(b) Visually check the wire harness, connectors and fuses for open and short, etc.

(c) Warm up the engine to the normal operating temperature.

(d) Confirm the problem symptoms and conditions, and check the DTCs according to the applicable chart.

OK → **Go to step 5**

NG

4	DTC chart

(a) Check the results obtained in step 3, then confirm the inspection procedure for the system or the part which should be checked using the DTC chart.

→ **Go to step 6**

5	Problem symptoms chart

(a) Check the results obtained in step 3, then confirm the inspection procedure for the system or the part which should be checked using the problem symptoms table.

6	Circuit inspection or parts inspection

(a) Confirm the circuit for the system or the part which should be checked using the problem symptoms table or the results obtained in step 4.

7	Repair

(a) Repair the affected system or part in accordance with the instructions in step 6.

8	Confirmation test

(a) After completing repairs, confirm that the problem has been solved.
(If the problem dose not reoccur, perform a confirmation test under the same conditions and in the same environment as when it occurred for the first time.)

END

CUSTOMER PROBLEM ANALYSIS

HINT:

- In troubleshooting, the problem symptoms must be confirmed accurately and all preconceptions must be cleared in order to give an accurate judgment. To ascertain what the problem symptoms are, it is extremely important to ask the customer about the problem and conditions when it occurred.
- The following 5 items are important points in the problem analysis. Past problems which are thought to be unrelated and the repair history, etc. may also help in some cases. So, as much information as possible should be gathered and its relationship with the problem symptoms should be correctly ascertained for a reference in troubleshooting. A customer problem analysis table is provided in Diagnostics section for each system for your use.

Important Points in the Customer Problem Analysis

- What ——— Vehicle model, system name
- When ——— Date, time, occurrence frequency
- Where ——— Road conditions
- Under what conditions? ——— Running conditions, driving conditions, weather conditions
- How did it happen? ——— Problem symptoms

(Sample) Supplemental restraint system check sheet.

CUSTOMER PROBLEM ANALYSIS CHECK

Supplemental Restraint System Check Sheet

Inspector's Name

Customer's Name		**Registration No.**	
		Registration Year	/ /
		Frame No.	
Date Vehicle Brought In	/ /	**Odometer Reading**	km miles

Date Problem First Occurred	/ /
Weather	☐ Fine ☐ Cloudy ☐ Rainy ☐ Snowy ☐ Other
Temperature	Approx.

Vehicle Operation	☐ Starting ☐ Idling ☐ Driving [☐ Constant speed ☐ Acceleration ☐ Deceleration ☐ Other]

SYMPTOM CONFIRMATION AND DIAGNOSTIC TROUBLE CODE

HINT:

- The diagnostic system in CAMRY has various functions. The first function is the Diagnostic Trouble Code (DTC) Check in which a malfunction in the signal circuits to the ECU is stored in code form in the ECU memory. Another function is the Input Signal Check which checks if the signals from various switches are sent to the ECU correctly. By using these check functions, possible areas of the problem can be narrowed down quickly and troubleshooting can be performed effectively. Diagnostic functions are incorporated in the following systems in CAMRY.

System	Diagnostic Trouble Code Check	Input Signal Check (Sensor Check)	Diagnostic Test Mode (Active Test)
SFI System	○ (with Check Mode)	○	○
ABS with EBD System	○	○	○
ABS with EBD & BA & TRAC & VSC System	○	○	○
Electronic Controlled Automatic Transmission [ECT]	○ (with Check Mode)	○	
Air Conditioning System	○	○	
Supplement Restraint System	○		
Power Door Lock Control System	○		
Wireless Door Lock Control System	○		
Engine Immobiliser System	○		
Body Multiplex Communication System	○		
Cruise Control System	○	○	

- In the DTC check, it is very important to determine whether the problem indicated by the DTC is still occurring or has occurred in the past but returned to normal at present. In addition, it must be checked in the problem symptom check whether the malfunction indicated by the DTC is directly related to the problem symptom or not. For this reason, the DTC should be checked before and after the symptom confirmation to determine the current conditions. If this is not done, it may, depending on the case, result in an unnecessary troubleshooting for normally operating systems, making it more difficult to detect the problem area, or trying to repair irrelevant areas. Therefore always follow the procedure in the correct order and perform the DTC check.
- A flow chart showing how to proceed with the troubleshooting using the diagnostic trouble code (DTC) check is shown below. This flow chart shows how to utilize the DTC check effectively Then, by carefully checking the results, indicates how to proceed either to the DTC troubleshooting or to the troubleshooting of problem symptoms table.

1 DTC check

2 Making a note and clearing of the DTCs displayed

3 Symptom confirmation

○	Problem symptoms exist
○	No problem symptoms exist

a → Go to step 5

b

4	Simulation test using the symptom simulation methods

5	DTC check

	DTC displayed
	Normal code displayed

a → **Troubleshooting of problem indicated by DTC**

b

6	Symptom confirmation

	No problem symptoms exist
	Problem symptoms exist

If a DTC is displayed in the initial DTC check, it indicates that a trouble may have occurred in a wire harness or connector in that circuit in the past, therefore check the wire harness and connectors (See page 01–31).

a → **System normal**

b

Troubleshooting of each problem symptom

The problem is still occurring in a place other than the diagnostic circuit (The DTC displayed first is either for a past problem or it is a secondary problem).

SYMPTOM SIMULATION

HINT:

The most difficult case in troubleshooting is when no problem symptoms occurs. In such cases, a thorough customer problem analysis must be carried out, Then simulate the same or similar conditions and environment in which the problem occurred in the customer's vehicle. No matter how much experience a technician has, or how skilled he may be, if he proceeds to troubleshoot without confirming the problem symptoms, he will tend to overlook something important in the repair operation and make a wrong guess somewhere, which will only lead to a standstill. For example, for a problem which only occurs when the engine is cold, or for a problem which occurs due to vibration caused by the road during driving, etc., the problem can never be determined with the engine hot condition or the vehicle at a standstill. Since vibration, heat or water penetration (moisture) is a likely cause for the problem which is difficult to reproduce, the symptom simulation tests introduced here are effective measures in a point that the external causes are applied to the vehicle in a stationary condition.

Important points in the symptom simulation test:

In the symptom simulation test, the problem symptoms should be confirmed, and the problem area or parts must also be found out. To do so, narrow down the possible problem circuits according to the symptoms before starting this test and have a hand–held tester connected beforehand. After that, carry out the symptom simulation test, judging whether the circuit being tested is defective or normal and also confirming the problem symptoms at the same time. Refer to the problem symptoms table of each system to narrow down the possible causes of the symptom.

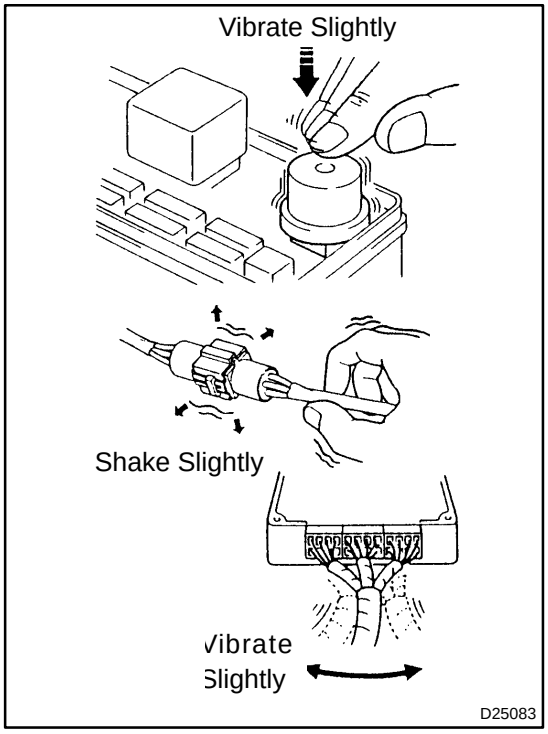

1. VIBRATION METHOD: When vibration seems to be the major cause.

(a) PART AND SENSOR

(1) Apply slight vibration with a finger to the part of the sensor considered to be the problem cause and check that the malfunction occurs.

HINT:

Applying strong vibration to relays may result in open relays.

(b) CONNECTORS

(1) Slightly shake the connector vertically and horizontally.

(c) WIRE HARNESS

(1) Slightly shake the wire harness vertically and horizontally.

The connector joint and fulcrum of the vibration are the major areas to be checked thoroughly.

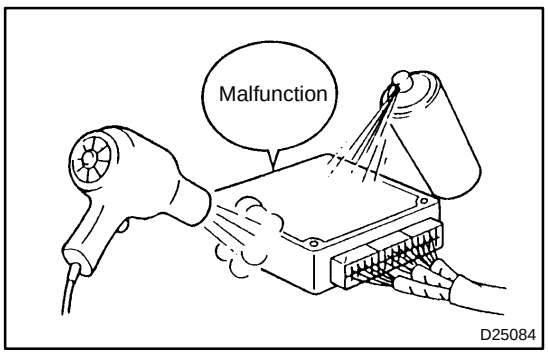

2. HEAT METHOD: When the problem seems to occur when the suspect area is heated.

(a) Heat the component that is the possible cause of the malfunction with a hair dryer or similar object. Check if the malfunction occurs.

NOTICE:

- **Do not heat to more than 60°C (140°F) (Temperature is limited so as not to damage the components).**
- **Do not apply heat directly to the parts in the ECU.**

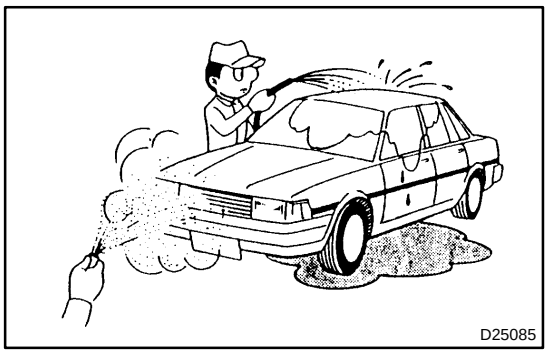

3. WATER SPRINKLING METHOD: When the malfunction seems to occur on a rainy day or in a high–humidity condition.

(a) Sprinkle water onto the vehicle and check if the malfunction occurs.

NOTICE:

- **Never sprinkle water directly onto the engine compartment, but indirectly change the temperature and humidity by applying water spray onto the radiator front surface.**
- **Never apply water directly onto the electronic components.**

HINT:

If a vehicle is subject to water leakage, the leaked water may contaminate the ECU. When testing a vehicle with a water leakage problem, special caution must be taken.

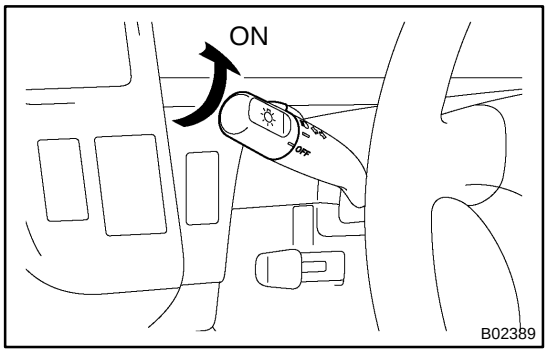

4. OTHERS: When the malfunction seems to occur when electrical load is excessive.

(a) Turn on all the electrical loads including the heater blower, headlights, rear window defogger, etc., and check if the malfunction occurs.

DIAGNOSTIC TROUBLE CODE CHART

The inspection procedure is shown in the table below. This table permits an efficient and accurate troubleshooting using the diagnostic trouble codes displayed in the diagnostic trouble code check. Proceed with troubleshooting in accordance with the inspection procedure given in the diagnostic chart corresponding to the diagnostic trouble codes displayed. The Supplemental Restraint System diagnostic trouble code chart is shown below as an example.

- DTC No.
  Indicates the diagnostic trouble code.
- Page or Instructions
  Indicates the page where the inspection procedure for each circuit is to be found, or gives instructions for checking and repairs.

- Trouble Area
  Indicates the suspect area of the problem.

- Detection Item
  Indicates the system of the problem or contents of the problem.

DIAGNOSTIC TROUBLE CODE CHART

If a malfunction code is displayed during the DTC check, check the circuit for that code listed in the table below (Proceed to the page given for that circuit).

DTC No. (See page)	Detection Item	Trouble Area	SRS Warming Light
B0100/13 (05–119)	● Short in D squib circuit	● Steering wheel pad (squib) ● Spiral cable ● Airbag sensor assembly ● Wire harness	ON
B0101/14 (05–124)	● Open in D squib circuit	● Steering wheel pad (squib) ● Spiral cable ● Airbag sensor assembly ● Wire harness	ON
B0102/11 (05–128)	● Short in D squib circuit (to ground)	● Steering wheel pad (squib) ● Spiral cable ● Airbag sensor assembly ● Wire harness	ON
B0103/12 (05–132)	● Short in D squib circuit (to B+)	● Steering wheel pad (squib) ● Spiral cable ● Airbag sensor assembly ● Wire harness	ON
B0105/53 (05–136)	● Short in P squib circuit	● Front passenger airbag assembly (squib) ● Airbag sensor assembly ● Wire harness	ON
B0106/54	● Open in P squib circuit	● Front passenger airbag assembly (squib) ● Airbag sensor assembly ● Wire harness	
	b circuit (to Ground)	● Front passenger airbag assembly (squib) ● Airbag sensor assembly ● Wire harness	

PROBLEM SYMPTOMS TABLE

The suspected circuits or parts for each problem symptom are shown in the table below. Use this table to troubleshoot the problem when a ”Normal” code is displayed in the diagnostic trouble code check but the problem is still occurring. Numbers in the table indicate the inspection order in which the circuits or parts should be checked.

HINT:

When the problem is not detected by the diagnostic system even though the problem symptom is present, it is considered that the problem is occurring outside the detection range of the diagnostic system, or that the problem is occurring in a system other than the diagnostic system.

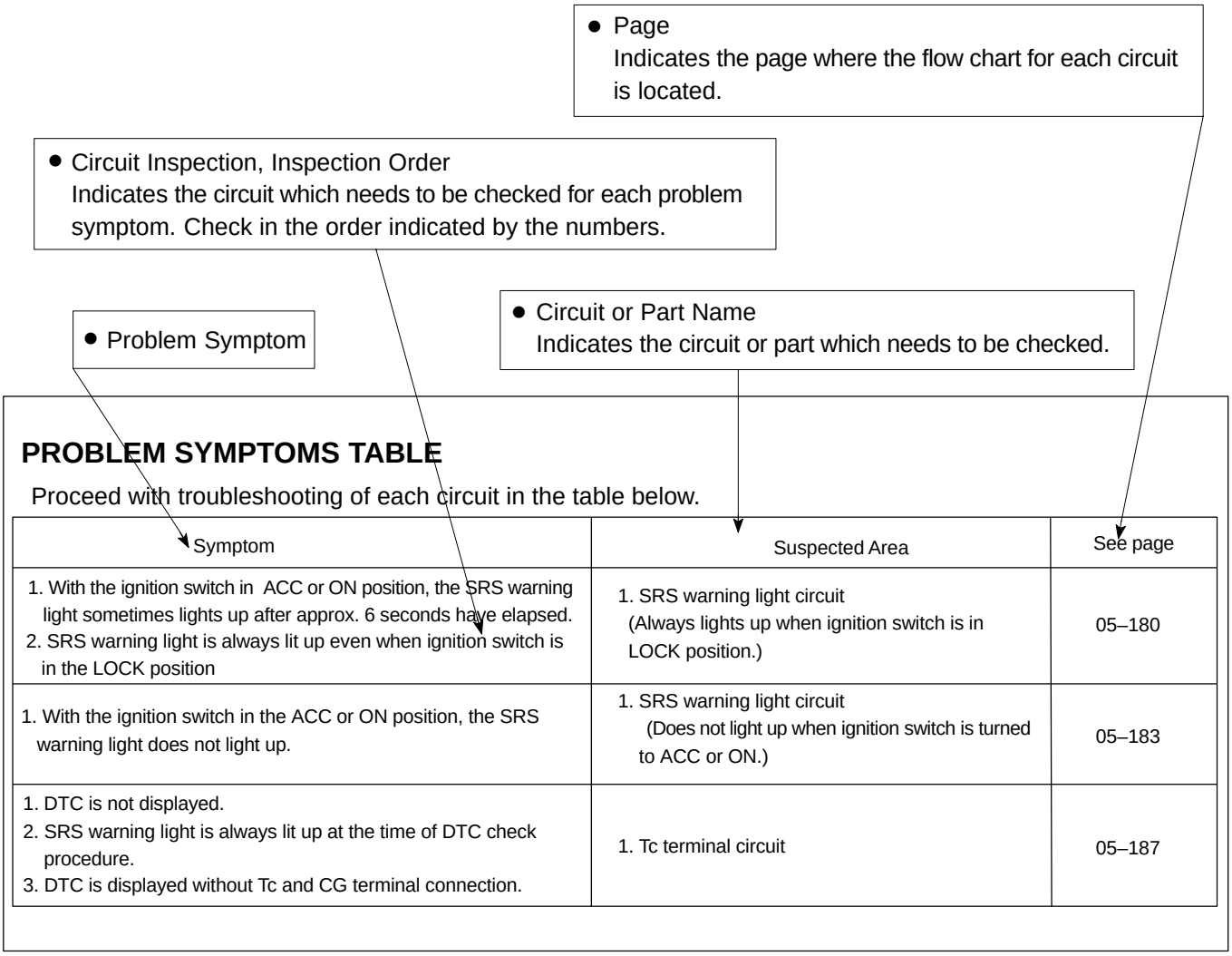

PROBLEM SYMPTOMS TABLE

Proceed with troubleshooting of each circuit in the table below.

Symptom	Suspected Area	See page
1. With the ignition switch in ACC or ON position, the SRS warning light sometimes lights up after approx. 6 seconds have elapsed. 2. SRS warning light is always lit up even when ignition switch is in the LOCK position	1. SRS warning light circuit (Always lights up when ignition switch is in LOCK position.)	05–180
1. With the ignition switch in the ACC or ON position, the SRS warning light does not light up.	1. SRS warning light circuit (Does not light up when ignition switch is turned to ACC or ON.)	05–183
1. DTC is not displayed. 2. SRS warning light is always lit up at the time of DTC check procedure. 3. DTC is displayed without Tc and CG terminal connection.	1. Tc terminal circuit	05–187

CIRCUIT INSPECTION

How to read and use each page is shown below.

● Circuit Description
The major role and operation, etc. of the circuit and its component parts are explained.

● Diagnostic Trouble Code No. and Detection Item

● Indicates the diagnostic trouble code, diagnostic trouble code set parameter and suspect area of the problem.

● Inspection Procedure
Use the inspection procedure to determine if the circuit is normal or abnormal, and if it is abnormal, use it to determine whether the problem is located in the sensors, actuators, wire harness or ECU.

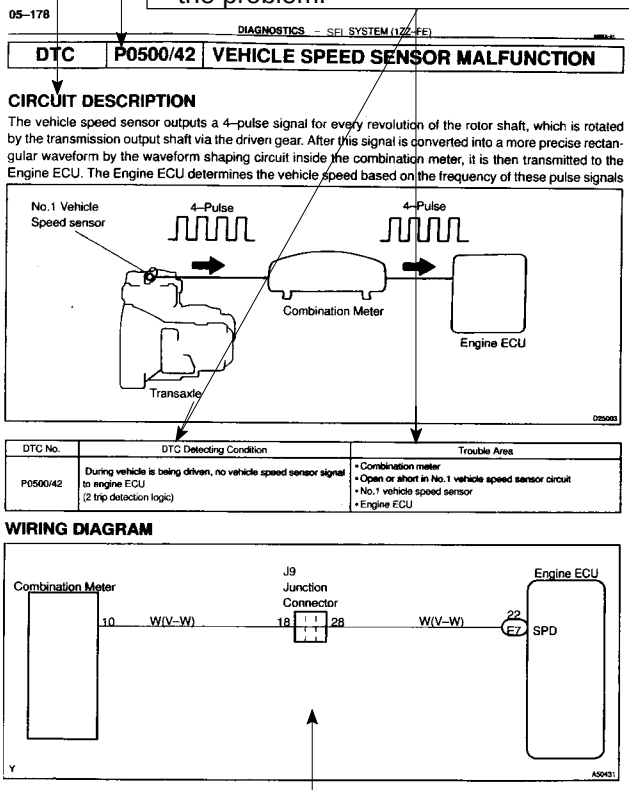

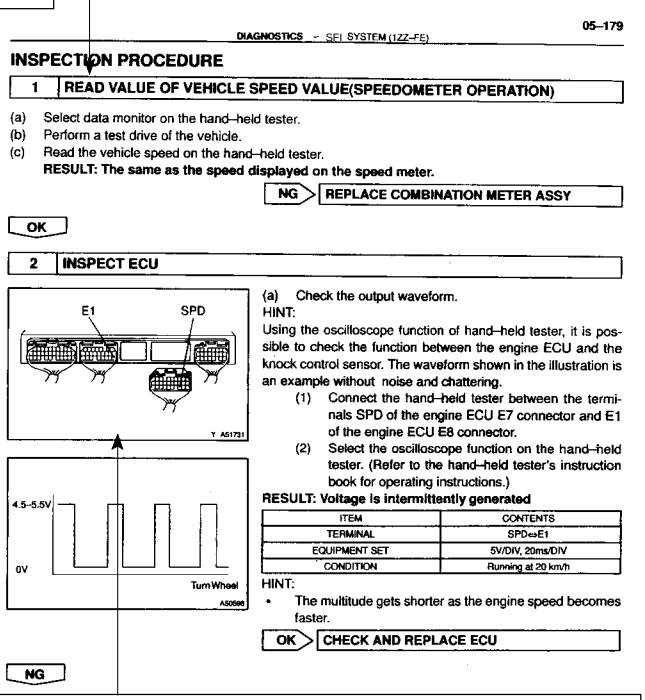

● Indicates the condition of the connector of ECU during the check.

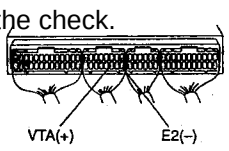

Connector being checked is connected.

Connections of tester are indicated by (+), (–) after terminals name.

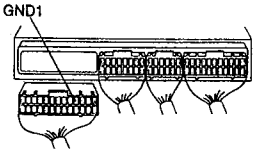

Connector being checked is disconnected.

On inspection with body ground side is not specified.

● Wiring Diagram
This shows a wiring diagram of the circuit.
Use this diagram together with ELECTRICAL WIRING DIAGRAM to thoroughly understand the circuit.
Wire colors are indicated by an alphabetical code.
B = Black, L = Blue, R = Red, BR = Brown,
LG = Light Green, V = Violet, G = Green,
O = Orange, W = White, GR = Gray, P = Pink,
Y = Yellow, SB = Sky Blue
The first letter indicates the basic wire color and the second letter indicates the color of the stripe.

D25842

01046–02

ELECTRONIC CIRCUIT INSPECTION PROCEDURE

1. BASIC INSPECTION

(a) RESISTANCE MEASURING CONDITION OF ELECTRONIC PARTS

(1) Unless stated, all resistance is measured at an ambient temperature of 20°C (68°F). Because the resistance may be outside the specifications if measured at high temperatures immediately after the vehicle has been running, measurements should be made when the engine has cooled down.

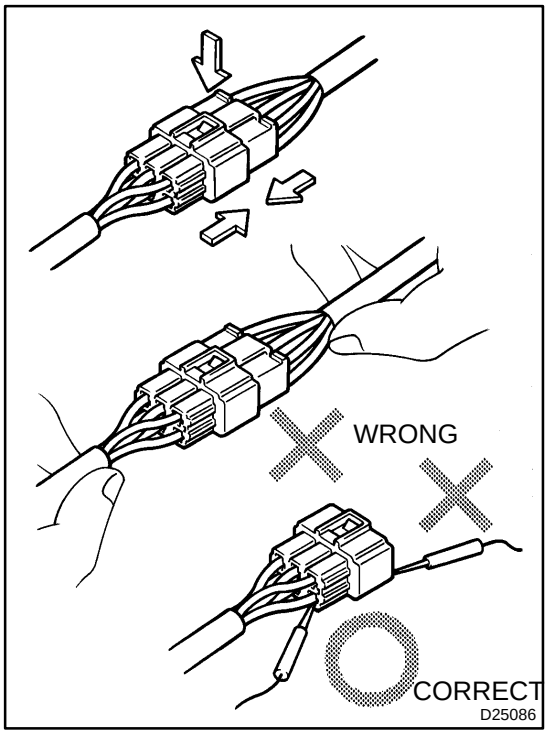

(b) HANDLING OF CONNECTOR

(1) When removing the connector with a lock, press the connector toward the engagement and remove the lock by making the lock claw movable easily.

(2) When removing the connector, do not hold the harness, but hold the connector.

(3) Before connecting the connector, check that there are no deformation, damage and missing of the terminals.

(4) Connection of the connector with a lock should be securely done until it makes a click sound.

(5) In case of checking the connector with a Toyota electrical tester, perform it at the back side (harness side) of the connector using a mini test lead.

NOTICE:

- **As a water proof connector cannot be checked from its back side, check by connecting the sub–harness.**
- **Do not damage the terminals by moving the inserted tester needle.**

(c) CONNECTOR CHECKING POINTS

(1) Checking when the connector is connected:
By holding the connector, check the inserted condition and locking efficiency (engaged condition).

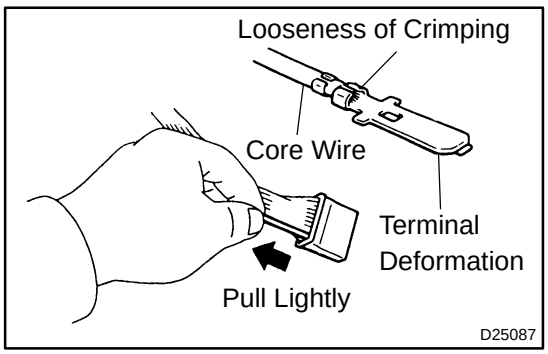

(2) Checking when the connector is removed:
Check by pulling the wire harness lightly (missing terminal, terminal crimping condition, core wire break).
Check visually if there is any rust, metal tip, water and bend of terminal (rust, mixing of foreign object, terminal deformation).

NOTICE:

When testing a gold–plated female terminal, always use a gold–plated male terminal.

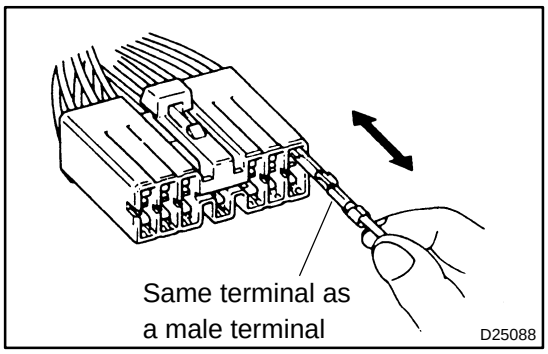

(3) Checking of the contact pressure of the terminal:
Prepare the same terminal as a male terminal.
By inserting it to a female terminal, check the engaged condition and sliding load.

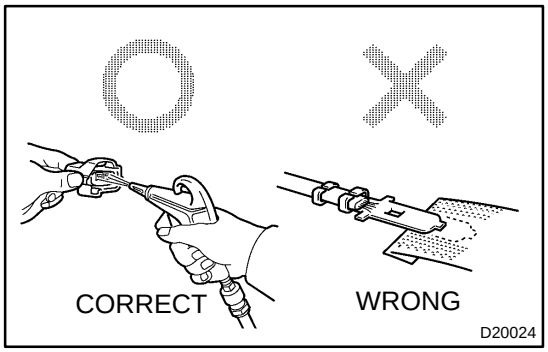

(d) REPAIR METHOD OF CONNECTOR TERMINAL

(1) In case that there is any soil at the contact point, clean the contact point using an air gun or shop rag. At this time, never polish the contact point using a sand paper as the platings may come off.

(2) In case of abnormal contact pressure, replace the female terminal. At this time, if a male terminal is gold–plated (gold color), use gold–plated female terminals and if it is silver–plated (silver color), use silver–plated female terminals.

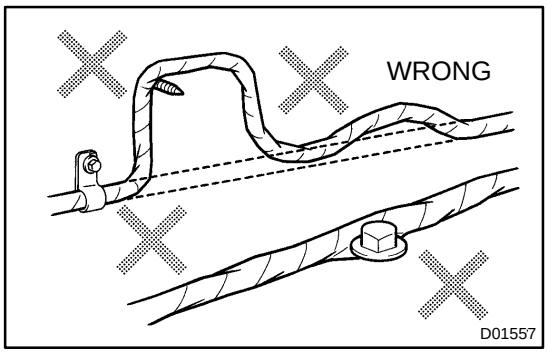

(e) HANDLING OF WIRE HARNESS

(1) In case of removing the wire harness, check the wiring and clamping condition before the work so as to is restore it correctly.

(2) Never twist, pull or slack off the wire harness more than necessary.

(3) Never make the wire harness come into contact with a high–temperature part, rotating, moving, vibrating or acute–angled part (edge of the panel, tip of the screw, etc.).

(4) When installing parts, never sandwich the wire harness between them.

(5) Never cut or break the cover of the wire harness. If it is cut or broken, replace it or securely repair it with a vinyl tape.

Fig. 1

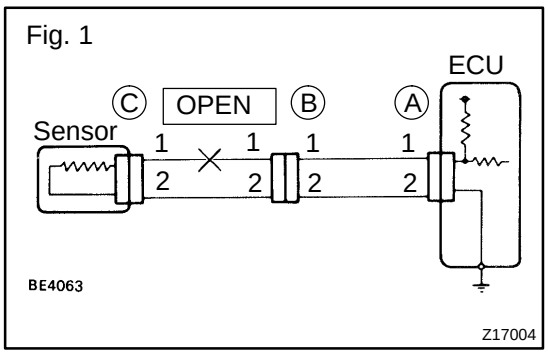

2. CHECK OPEN CIRCUIT

(a) For the open circuit in the wire harness in Fig. 1, perform ”(b) Check the continuity” or ”(c) Check the voltage” to locate the section.

Fig. 2

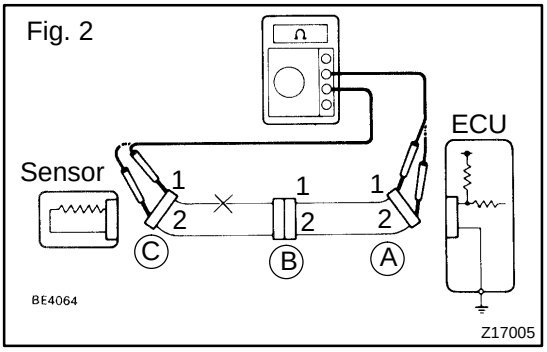

(b) Check the continuity.

(1) Disconnect connectors ”A” and ”C” and measure the resistance between them.

Resistance: 1 Ω or less

HINT:

Measure the resistance while lightly shaking the wire harness vertically and horizontally.

In the case of Fig. 2:

Between terminal 1 of connector ”A” and terminal 1 of connector ”C” → No continuity (open)

Between terminal 2 of connector ”A” and terminal 2 of connector ”C” → Continuity

Therefore, it is found out that there is an open circuit between terminal 1 of connector ”A” and terminal 1 of connector ”C”.

Fig. 3

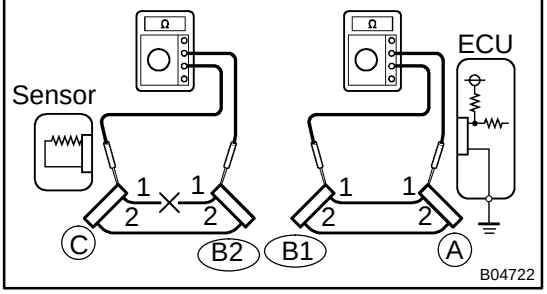

(2) Disconnect connector ”B” and measure the resistance between the connectors.

In the case of Fig. 3:

Between terminal 1 of connector ”A” and terminal 1 of connector ”B1” → Continuity

Between terminal 1 of connector ”B2” and terminal 1 of connector ”C” → No continuity (open)

Therefore, it is found out that there is an open circuit between terminal 1 of connector ”B2” and terminal 1 of connector ”C”.

Fig. 4

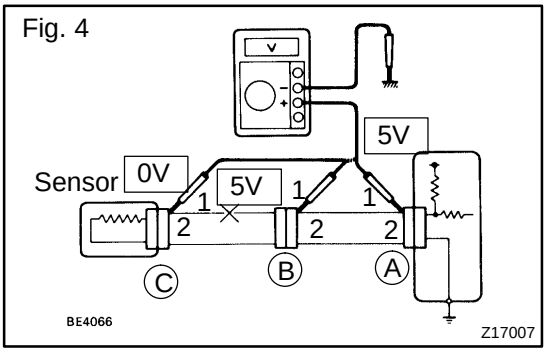

(c) Check the voltage.

(1) In a circuit in which voltage is applied (to the ECU connector terminal), an open circuit can be checked by conducting a voltage check.

As shown in Fig. 4, with each connector still connected, measure the voltage between the body ground and terminal 1 of connector ”A” at the ECU 5 V output terminal, terminal 1 of connector ”B”, and terminal 1 of connector ”C”, in that order.

(2) If the results are:

5 V: Between terminal 1 of connector ”a” and body ground

5 v: between terminal 1 of connector ”b” and body ground

0 v: between terminal 1 of connector ”c” and body ground

Then it is found out that there is an open circuit in the wire harness between terminal 1 of ”B” and terminal 1 of ”C”.

Fig. 5

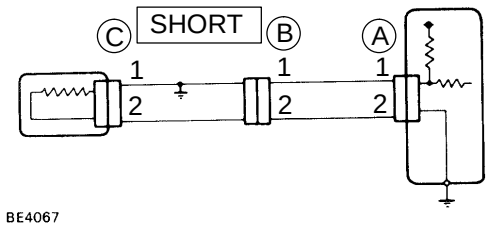

3. CHECK SHORT CIRCUIT

(a) If the wire harness is ground shorted as in Fig. 5, locate the section by conducting a ”continuity check with the body ground”.

Fig. 6

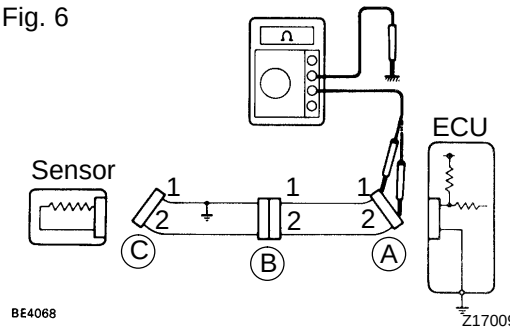

(b) Check the continuity with the body ground.

(1) Disconnect connectors ”A” and ”C” and measure the resistance between terminal 1 and 2 of connector ”A” and the body ground.

Resistance: 1 MΩ or higher

HINT:

Measure the resistance while lightly shaking the wire harness vertically and horizontally.

In the case of Fig. 6:

Between terminal 1 of connector ”A” and body ground → Continuity (short)

Between terminal 2 of connector ”A” and body ground → No continuity

Therefore, it is found out that there is a short circuit between terminal 1 of connector ”A” and terminal 1 of connector ”C”.

Fig. 7

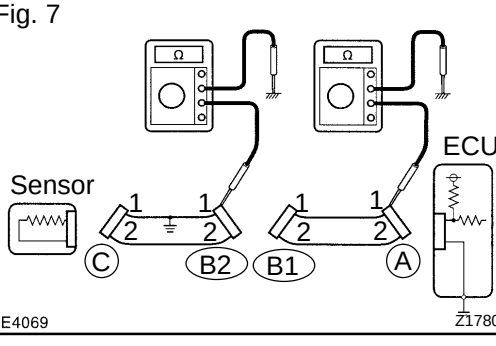

(2) Disconnect connector ”B” and measure the resistance between terminal 1 of connector ”A” and the body ground, and terminal 1 of connector ”B2” and the body ground.

In the case of Fig. 7:

Between terminal 1 of connector ”A” and body ground → No continuity

Between terminal 1 of connector ”B2” and body ground → Continuity (short)

Therefore, it is found out that there is a short circuit between terminal 1 of connector ”B2” and terminal 1 of connector ”C”.

4. CHECK AND REPLACE ECU

NOTICE:

- **Start an inspection of the connector from the backside of the connector at the wire harness side with the connector connected to the ECU.**
- **When no measuring condition is specified, perform the inspection with the engine stopped and also the ignition switched ON.**

(a) First check the ECU ground circuit. If it is faulty, repair it. If it is normal, the ECU could be faulty So, replace the ECU with a normal functioning one and check if the symptoms appear.

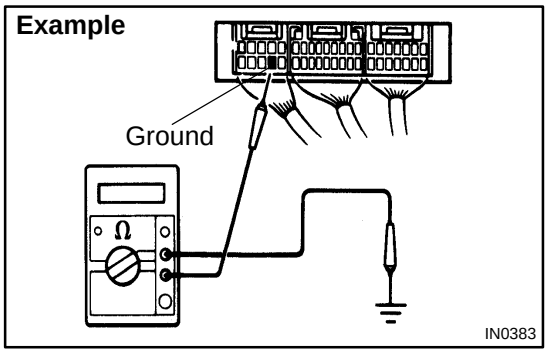

(1) Measure the resistance between the ECU ground terminal and body ground.

Resistance: 1 Ω or less

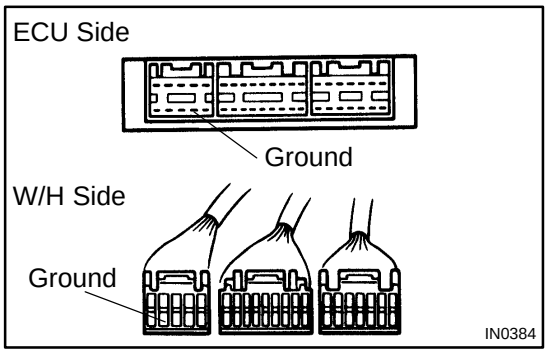

(2) Disconnect the ECU connector, check the ground terminals on the ECU side and wire harness side for bend and check the contact pressure.

TERMS

01047–02

ABBREVIATIONS USED IN THIS MANUAL

Abbreviations	Meaning
ABS	Anti–Lock Brake System
A/C	Air Conditioner
AC	Alternating Current
ACC	Accessory
ACIS	Acoustic Control Induction System
ACSD	Automatic Cold Start Device
A.D.D.	Automatic Disconnecting Differential
A/F	Air–Fuel Ratio
AHC	Active Height Control Suspension
ALR	Automatic Locking Retractor
ALT	Alternator
AMP	Amplifier
ANT	Antenna
APPROX.	Approximately
ASSY	Assembly
A/T, ATM	Automatic Transmission (Transaxle)
ATF	Automatic Transmission Fluid
AUTO	Automatic
AUX	Auxiliary
AVG	Average
AVS	Adaptive Variable Suspension
B+	Battery Voltage
BA	Brake Assist
BACS	Boost Altitude Compensation System
BAT	Battery
BDC	Bottom Dead Center
B/L	Bi–Level
B/S	Bore–Stroke Ratio
BTDC	Before Top Dead Center
BVSV	Bimetallic Vacuum Switching Valve
Calif.	California
CB	Circuit Breaker
CCo	Catalytic Converter For Oxidation
CD	Compact Disc
CF	Cornering Force
CG	Center Of Gravity
CH	Channel
CKD	Complete Knock Down
COMB.	Combination
CPE	Coupe
CPS	Combustion Pressure Sensor
CPU	Central Processing Unit
CRS	Child Restraint System
CTR	Center
C/V	Check Valve
CV	Control Valve
CW	Curb Weight
DC	Direct Current

Abbreviations	Meaning
DEF	Defogger
DFL	Deflector
DIFF.	Differential
DIFF. LOCK	Differential Lock
D/INJ	Direct Injection
DLC	Data Link Connector
DLI	Distributorless Ignition
DOHC	Double Overhead Cam shaft
DP	Dash Pot
DS	Dead Soak
DSP	Digital Signal Processor
DTC	Diagnostic Trouble Code
DVD	Digital Versatible Disc
EBD	Electric Brake Force Distribution
ECAM	Engine Control And Measurement System
ECD	Electronic Controlled Diesel
ECDY	Eddy Current Dynamometer
ECT	Electronic Control Transmission
ECU	Electronic Control Unit
ED	Electro–Deposited Coating
EDU	Electronic Driving Unit
EDIC	Electric Diesel Injection Control
EFI	Electronic Fuel Injection
E/G	Engine
EGR	Exhaust Gas Recirculation
EGR–VM	EGR–Vacuum Modulator
ELR	Emergency Locking Retractor
EMPS	Electric Motor Power Steering
ENG	Engine
ESA	Electronic Spark Advance
ETCS–i	Electronic Throttle Control System–intelligent
EVAP	Evaporative Emission Control
EVP	Evaporator
E–VRV	Electric Vacuum Regulating Valve
EX	Exhaust
FE	Fuel Economy
FF	Front–Engine Front–Wheel–Drive
F/G	Fuel Gauge
FIPG	Formed In Place Gasket
FL	Fusible Link
F/P	Fuel Pump
FPU	Fuel Pressure Up
Fr	Front
FR	Front–Engine Rear–Wheel–Drive
F/W	Flywheel
FW/D	Flywheel Damper
FWD	Front–Wheel–Drive
GAS	Gasoline
GND	Ground
GPS	Global Positioning System
HAC	High Altitude Compensator

Abbreviations	Meaning
H/B	Hatchback
H–FUSE	High Current Fuse
HI	High
HID	High Intensity Discharge (Head Lamp)
HSG	Housing
HT	Hard Top
HWS	Heated Windshield System
IC	Integrated Circuit
IDI	Indirect Diesel Injection
IFS	Independent Front Suspension
IG	Ignition
IIA	Integrated Ignition Assembly
IN	Intake (Manifold, Valve)
INT	Intermittent
I/P	Instrument Panel
IRS	Independent Rear Suspension
ISC	Idle Speed Control
J/B	Junction Block
J/C	Junction Connector
KD	Kick–Down
LAN	Local Area Network
LB	Liftback
LCD	Liquid Crystal Display
LED	Light Emitting Diode
LH	Left–Hand
LHD	Left–Hand Drive
L/H/W	Length, Height, Width
LLC	Long–Life Coolant
LNG	Liquified Natural Gas
LO	Low
LPG	Liquified Petroleum Gas
LSD	Limited Slip Differential
LSP & PV	Load Sensing Proportioning And Bypass Valve
LSPV	Load Sensing Proportioning Valve
MAP	Manifold Absolute Pressure
MAX.	Maximum
MIC	Microphone
MIL	Malfunction Indicator Lamp
MIN.	Minimum
MG1	Motor Generator No.1
MG2	Motor Generator No.2
MP	Multipurpose
MPI	Multipoint Electronic Injection
MPX	Multiplex Communication System
M/T, MTM	Manual Transmission (Transaxle)
MT	Mount
MTG	Mounting
N	Neutral
NA	Natural Aspiration
NO.	Number
O2S	Oxygen Sensor

Abbreviations	Meaning
O/D	Overdrive
OEM	Original Equipment Manufacturing
OHC	Overhead Camshaft
OHV	Overhead Valve
OPT	Option
ORVR	On–board Refilling Vapor Recovery
O/S	Oversize
P & BV	Proportioning And Bypass Valve
PCS	Power Control System
PCV	Positive Crankcase Ventilation
PKB	Parking Brake
PPS	Progressive Power Steering
PS	Power Steering
PTO	Power Take–Off
P/W	Power Window
R & P	Rack And Pinion
RAM	Random Access Memory
R/B	Relay Block
RBS	Recirculating Ball Type Steering
R/F	Reinforcement
RFS	Rigid Front Suspension
RH	Right–Hand
RHD	Right–Hand Drive
RLY	Relay
ROM	Read Only Memory
Rr	Rear
RR	Rear–Engine Rear–Wheel–Drive
RRS	Rigid Rear Suspension
RWD	Rear–Wheel–Drive
SDN	Sedan
SEN	Sensor
SICS	Starting Injection Control System
SOC	State Of Charge
SOHC	Single Overhead Camshaft
SPEC	Specification
SPI	Single Point Injection
SRS	Supplemental Restraint System
SSM	Special Service Materials
SST	Special Service Tools
STD	Standard
STJ	Cold–Start Fuel Injection
SW	Switch
SYS	System
T/A	Transaxle
TACH	Tachometer
TBI	Throttle Body Electronic Fuel Injection
TC	Turbocharger
TCCS	TOYOTA Computer–Controlled System
TCV	Timing Control Valve
TDC	Top Dead Center
TEMP.	Temperature

Abbreviations	Meaning
TEMS	TOYOTA Electronic Modulated Suspension
TFT	Toyota Free–Tronic
TIS	Total Information System For Vehicle Development
T/M	Transmission
TMC	TOYOTA Motor Corporation
TMMK	TOYOTA Motor Manufacturing Kentucky, Inc.
TRAC	Traction Control System
TURBO	Turbocharge
TWC	Three–Way Catalyst
U/D	Underdrive
U/S	Undersize
VCV	Vacuum Control Valve
VENT	Ventilator
VIN	Vehicle Identification Number
VPS	Variable Power Steering
VSC	Vehicle Stability Control
VSV	Vacuum Switching Valve
VTV	Vacuum Transmitting Valve
VVT–i	Variable Valve Timing–intelligent
W/	With
WGN	Wagon
W/H	Wire Harness
W/O	Without
WU–TWC	Warm Up Three–way Catalytic Converter
WU–OC	Warm Up Oxidation Catalytic Converter
1ST	First
2ND	Second
2WD	Two Wheel Drive Vehicle (4 x 2)
3RD	Third
4TH	Fourth
4WD	Four Wheel Drive Vehicle (4 x 4)
4WS	Four Wheel Steering System
5TH	Fifth

01048–02

GLOSSARY OF SAE AND TOYOTA TERMS

This glossary lists all SAE–J1930 terms and abbreviations used in this manual in compliance with SAE recommendations, as well as their TOYOTA equivalents.

SAE ABBREVIATIONS	SAE TERMS	TOYOTA TERMS ( )—ABBREVIATIONS
A/C	Air Conditioning	Air Conditioner
ACL	Air Cleaner	Air Cleaner, A/CL
AIR	Secondary Air Injection	Air Injection (AI)
AP	Accelerator Pedal	–
B+	Battery Positive Voltage	+B, Battery Voltage
BARO	Barometric Pressure	HAC
CAC	Charge Air Cooler	Intercooler
CARB	Carburetor	Carburetor
CFI	Continuous Fuel Injection	–
CKP	Crankshaft Position	Crank Angle
CL	Closed Loop	Closed Loop
CMP	Camshaft Position	Cam Angle
CPP	Clutch Pedal Position	–
CTOX	Continuous Trap Oxidizer	–
CTP	Closed Throttle Position	LL ON, Idle ON
DFI	Direct Fuel Injection (Diesel)	Direct Injection (DI)
DI	Distributor Ignition	–
DLC1 DLC2 DLC3	Data Link Connector 1 Data Link Connector 2 Data Link Connector 3	1: Check Connector 2: Total Diagnosis Communication Link (TDCL) 3: OBD II Diagnostic Connector
DTC	Diagnostic Trouble Code	Diagnostic Trouble Code
DTM	Diagnostic Test Mode	–
ECL	Engine Control Level	–
ECM	Engine Control Module	Engine ECU (Electronic Control Unit)
ECT	Engine Coolant Temperature	Coolant Temperature, Water Temperature (THW)
EEPROM	Electrically Erasable Programmable Read Only Memory	Electrically Erasable Programmable Read Only Memory (EEPROM), Erasable Programmable Read Only Memory (EPROM)
EFE	Early Fuel Evaporation	Cold Mixture Heater (CMH), Heat Control Valve (HCV)
EGR	Exhaust Gas Recirculation	Exhaust Gas Recirculation (EGR)
EI	Electronic Ignition	TOYOTA Distributorless Ignition (TDI)
EM	Engine Modification	Engine Modification (EM)
EPROM	Erasable Programmable Read Only Memory	Programmable Read Only Memory (PROM)
EVAP	Evaporative Emission	Evaporative Emission Control (EVAP)
FC	Fan Control	–
FEEPROM	Flash Electrically Erasable Programmable Read Only Memory	–
FEPROM	Flash Erasable Programmable Read Only Memory	–
FF	Flexible Fuel	–
FP	Fuel Pump	Fuel Pump
GEN	Generator	Alternator
GND	Ground	Ground (GND)

HO2S	Heated Oxygen Sensor	Heated Oxygen Sensor (HO_2S)
IAC	Idle Air Control	Idle Speed Control (ISC)
IAT	Intake Air Temperature	Intake or Inlet Air Temperature
ICM	Ignition Control Module	–
IFI	Indirect Fuel Injection	Indirect Injection (IDL)
IFS	Inertia Fuel–Shutoff	–
ISC	Idle Speed Control	–
KS	Knock Sensor	Knock Sensor
MAF	Mass Air Flow	Air Flow Meter
MAP	Manifold Absolute Pressure	Manifold Pressure Intake Vacuum
MC	Mixture Control	Electric Bleed Air Control Valve (EBCV) Mixture Control Valve (MCV) Electric Air Control Valve (EACV)
MDP	Manifold Differential Pressure	–
MFI	Multiport Fuel Injection	Electronic Fuel Injection (EFI)
MIL	Malfunction Indicator Lamp	Check Engine Lamp
MST	Manifold Surface Temperature	–
MVZ	Manifold Vacuum Zone	–
NVRAM	Non–Volatile Random Access Memory	–
O2S	Oxygen Sensor	Oxygen Sensor, O_2 Sensor (O_2S)
OBD	On–Board Diagnostic	On–Board Diagnostic System (OBD)
OC	Oxidation Catalytic Converter	Oxidation Catalyst Convert (OC), CCo
OP	Open Loop	Open Loop
PAIR	Pulsed Secondary Air Injection	Air Suction (AS)
PCM	Powertrain Control Module	–
PNP	Park/Neutral Position	–
PROM	Programmable Read Only Memory	–
PSP	Power Steering Pressure	–
PTOX	Periodic Trap Oxidizer	Diesel Particulate Filter (DPF) Diesel Particulate Trap (DPT)
RAM	Random Access Memory	Random Access Memory (RAM)
RM	Relay Module	–
ROM	Read Only Memory	Read Only Memory (ROM)
RPM	Engine Speed	Engine Speed
SC	Supercharger	Supercharger
SCB	Supercharger Bypass	E–ABV
SFI	Sequential Multiport Fuel Injection	Electronic Fuel Injection (EFI), Sequential Injection
SPL	Smoke Puff Limiter	–
SRI	Service Reminder Indicator	–
SRT	System Readiness Test	–
ST	Scan Tool	–
TB	Throttle Body	Throttle Body
TBI	Throttle Body Fuel Injection	Single Point Injection Central Fuel Injection (Ci)
TC	Turbocharger	Turbocharger
TCC	Torque Converter Clutch	Torque Converter

TCM	Transmission Control Module	Transmission ECU, ECT ECU
TP	Throttle Position	Throttle Position
TR	Transmission Range	–
TVV	Thermal Vacuum Valve	Bimetallic Vacuum Switching Valve (BVSV) Thermostatic Vacuum Switching Valve (TVSV)
TWC	Three–Way Catalytic Converter	Three–Way Catalytic (TWC) Manifold Converter CC_{RO}
TWC+OC	Three–Way + Oxidation Catalytic Converter	CC_R + CCo
VAF	Volume Air Flow	Air Flow Meter
VR	Voltage Regulator	Voltage Regulator
VSS	Vehicle Speed Sensor	Vehicle Speed Sensor
WOT	Wide Open Throttle	Full Throttle
WU–OC	Warm Up Oxidation Catalytic Converter	–
WU–TWC	Warm Up Three–Way Catalytic Converter	–
3GR	Third Gear	–
4GR	Fourth Gear	–

DIAGNOSTICS

020W2–01

PREPARATION

SST

	09816–30010	Oil Pressure Switch Socket	SFI SYSTEM(2AZ–FE)
	09843–18040	Diagnosis Check Wire No.2	AIR CONDITIONING SYSTEM ABS WITH EBD SYSTEM (BOSCH MADE) SUPPLEMENTAL RESTRAINT SYSTEM ABS WITH EBD & BA & TRAC & VSC SYSTEM COMBINATION METER ABS WITH EBD SYSTEM (DENSO MADE) SFI SYSTEM(1MZ–FE)

Recomended Tools

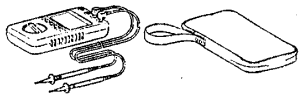	09082–00040	TOYOTA Electrical Tester	ELECTRONIC CONTROLLED AUTOMATIC TRANSAXLE[ECT] SUPPLEMENTAL RESTRAINT SYSTEM LIGHTING SYSTEM SFI SYSTEM(1MZ–FE) SFI SYSTEM(2AZ–FE)
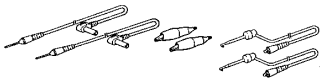	(09083–00150)	Test Lead Set	AIR CONDITIONING SYSTEM ELECTRONIC CONTROLLED AUTOMATIC TRANSAXLE[ECT] SUPPLEMENTAL RESTRAINT SYSTEM LIGHTING SYSTEM AUDIO SYSTEM ABS WITH EBD & BA & TRAC & VSC SYSTEM NAVIGATION SYSTEM POWER DOOR LOCK CONTROL SYSTEM WIRELESS DOOR LOCK CONTROL SYSTEM ENGINE IMMOBILISER SYSTEM BODY MULTIPLEX COMMUNICATION SYSTEM CRUISE CONTROL SYSTEM COMBINATION METER ABS WITH EBD SYSTEM (DENSO MADE) SFI SYSTEM(1MZ–FE) SFI SYSTEM(2AZ–FE)

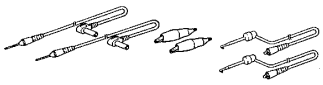 (09083–00150) Test Lead Set	AIR CONDITIONING SYSTEM ELECTRONIC CONTROLLED AUTOMATIC TRANSAXLE[ECT] SUPPLEMENTAL RESTRAINT SYSTEM LIGHTING SYSTEM AUDIO SYSTEM ABS WITH EBD & BA & TRAC & VSC SYSTEM NAVIGATION SYSTEM POWER DOOR LOCK CONTROL SYSTEM WIRELESS DOOR LOCK CONTROL SYSTEM ENGINE IMMOBILISER SYSTEM BODY MULTIPLEX COMMUNICATION SYSTEM CRUISE CONTROL SYSTEM COMBINATION METER ABS WITH EBD SYSTEM (DENSO MADE) SFI SYSTEM(1MZ–FE) SFI SYSTEM(2AZ–FE)

ENGINE CONTROL SYSTEM

020TK–01

PREPARATION

Equipment

Radiator cap tester	
Torque wrench	
Ohmmeter	

FUEL

PREPARATION

020TL–01

SST

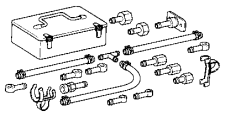	09268–41047	Injection Measuring Tool Set	FUEL SYSTEM(1MZ–FE) FUEL SYSTEM(2AZ–FE)
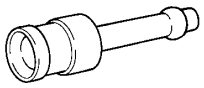	(09268–41110)	Adaptor	FUEL SYSTEM(1MZ–FE) FUEL SYSTEM(2AZ–FE)
	(09268–41300)	Clamp	FUEL SYSTEM(1MZ–FE) FUEL SYSTEM(2AZ–FE)
	(95336–08070)	Hose	FUEL SYSTEM(1MZ–FE) FUEL SYSTEM(2AZ–FE)
	09842–30070	Wire ”F” EFI Inspection	FUEL SYSTEM(1MZ–FE)
	(95333–06030)	Hose	FUEL SYSTEM(1MZ–FE) FUEL SYSTEM(2AZ–FE)
	09842–30080	Wire ”H” EFI Inspection	FUEL SYSTEM(2AZ–FE)
	(95333–06030)	Hose	FUEL SYSTEM(1MZ–FE) FUEL SYSTEM(2AZ–FE)
	(90467–13001)	Clip	FUEL SYSTEM(1MZ–FE) FUEL SYSTEM(2AZ–FE)

Recomended Tools

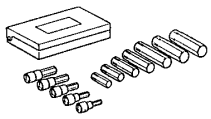	09040–00011	Hexagon Wrench Set	FUEL INJECTOR ASSY(1MZ–FE)
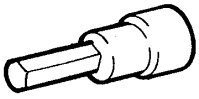	(09043–20050)	Socket Hexagon Wrench 5	FUEL INJECTOR ASSY(1MZ–FE)
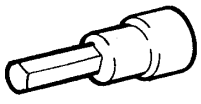	(09043–20080)	Socket Hexagon Wrench 8	FUEL INJECTOR ASSY(1MZ–FE)

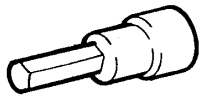	(09043–20050) Socket Hexagon Wrench 5	FUEL INJECTOR ASSY(1MZ–FE)
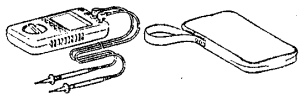	09082–00040 TOYOTA Electrical Tester	FUEL SYSTEM(1MZ–FE)
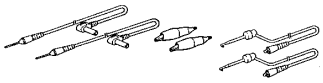	(09083–00150) Test Lead Set	FUEL SYSTEM(1MZ–FE) FUEL SYSTEM(2AZ–FE)

Equipment

Service Wire Harness	
Stopwatch	
Measuring Flask	
Ohmmeter	
Radiator cap tester	
Torque wrench	

SSM

	08850–00065 Butyl Tape Set	FUEL PUMP ASSY(1MZ–FE) FUEL TANK ASSY(1MZ–FE) FUEL PUMP ASSY(2AZ–FE) FUEL TANK ASSY(2AZ–FE)

EMISSION CONTROL

020TM–01

PREPARATION

SST

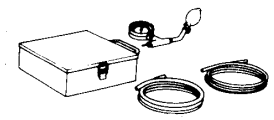	09992–00242 Turbocharger Pressure Gauge	EMISSION CONTROL SYSTEM(1MZ–FE) EMISSION CONTROL SYSTEM(2AZ–FE)

Equipment

Service Wire Harness	
Ohmmeter	
Torque wrench	
Vacuum gauge	
Hand–held vacuum pump	

INTAKE

020TN–01

PREPARATION

Recomended Tools

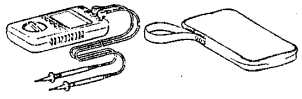	09082–00040	TOYOTA Electrical Tester	INTAKE AIR CONTROL SYSTEM(1MZ–FE)
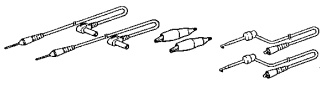	(09083–00150)	Test Lead Set	INTAKE AIR CONTROL SYSTEM(1MZ–FE)

Equipment

Service Wire Harness	
Torque wrench	
Hand–held vacuum pump	

SSM

	08826–00080	Seal Packing Black or equivalent (FIPG)	INTAKE AIR CONTROL VALVE ASSY(1MZ–FE)

ENGINE MECHANICAL

020TS–01

PREPARATION

SST

	09032–00100	Oil Pan Seal Cutter	PARTIAL ENGINE ASSY(1MZ–FE) PARTIAL ENGINE ASSY(2AZ–FE) CHAIN(2AZ–FE) CYLINDER HEAD GASKET(2AZ–FE)
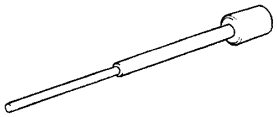	09201–01055	Valve Guide Bushing Remover & Replacer 5.5	CYLINDER HEAD ASSY(1MZ–FE)
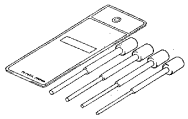	09201–10000	Valve Guide Bushing Remover & Replacer Set	CYLINDER HEAD ASSY(1MZ–FE) CYLINDER HEAD ASSY(2AZ–FE)
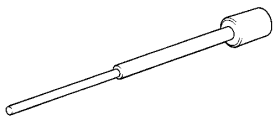	(09201–01050)	Valve Guide Bushing Remover & Replacer 5	CYLINDER HEAD ASSY(2AZ–FE)
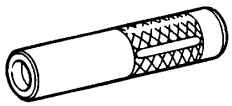	09201–41020	Valve Stem Oil Seal Replacer	CYLINDER HEAD ASSY(1MZ–FE) CYLINDER HEAD ASSY(2AZ–FE)
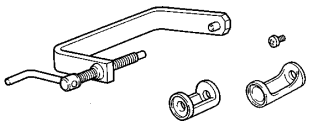	09202–70020	Valve Spring Compressor	CYLINDER HEAD ASSY(1MZ–FE) CYLINDER HEAD ASSY(2AZ–FE)
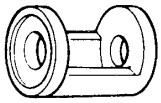	(09202–00010)	Attachment	CYLINDER HEAD ASSY(1MZ–FE) CYLINDER HEAD ASSY(2AZ–FE)
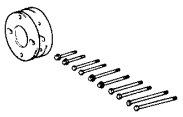	09213–54015	Crankshaft Pulley Holding Tool	PARTIAL ENGINE ASSY(1MZ–FE) CAMSHAFT(RH BANK)(1MZ–FE) OIL PUMP SEAL(1MZ–FE) ENGINE REAR OIL SEAL(1MZ–FE) CYLINDER HEAD GASKET(1MZ–FE) CYLINDER HEAD GASKET NO.2(1MZ–FE) TIMING BELT(1MZ–FE) CAMSHAFT(LH BANK)(1MZ–FE) PARTIAL ENGINE ASSY(2AZ–FE) CHAIN(2AZ–FE) TIMING GEAR CASE OR TIMING CHAIN CASE OIL SEAL(2AZ–FE) ENGINE REAR OIL SEAL(2AZ–FE) CYLINDER HEAD GASKET(2AZ–FE)

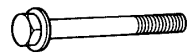	(91651–60855)	Bolt	PARTIAL ENGINE ASSY(1MZ–FE) CAMSHAFT(RH BANK)(1MZ–FE) OIL PUMP SEAL(1MZ–FE) ENGINE REAR OIL SEAL(1MZ–FE) CYLINDER HEAD GASKET(1MZ–FE) CYLINDER HEAD GASKET NO.2(1MZ–FE) TIMING BELT(1MZ–FE) CAMSHAFT(LH BANK)(1MZ–FE) PARTIAL ENGINE ASSY(2AZ–FE) CHAIN(2AZ–FE) TIMING GEAR CASE OR TIMING CHAIN CASE OIL SEAL(2AZ–FE) ENGINE REAR OIL SEAL(2AZ–FE) CYLINDER HEAD GASKET(2AZ–FE)
	09222–30010	Connecting Rod Bushing Remover & Replacer	CYLINDER BLOCK(1MZ–FE)
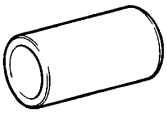	09223–00010	Cover & Seal Replacer	PARTIAL ENGINE ASSY(1MZ–FE) OIL PUMP SEAL(1MZ–FE)
	09223–15030	Oil Seal & Bearing Replacer	PARTIAL ENGINE ASSY(1MZ–FE) ENGINE REAR OIL SEAL(1MZ–FE) PARTIAL ENGINE ASSY(2AZ–FE) ENGINE REAR OIL SEAL(2AZ–FE)
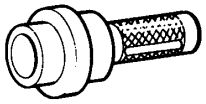	09223–22010	Crankshaft Front Oil Seal Replacer	PARTIAL ENGINE ASSY(2AZ–FE) TIMING GEAR CASE OR TIMING CHAIN CASE OIL SEAL(2AZ–FE)
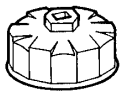	09228–06501	Oil Filter Wrench	PARTIAL ENGINE ASSY(2AZ–FE)
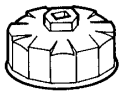	09228–07501	Oil Filter Wrench	PARTIAL ENGINE ASSY(1MZ–FE)
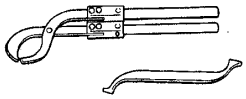	09248–55040	Valve Clearance Adjust Tool Set	PARTIAL ENGINE ASSY(1MZ–FE) CAMSHAFT(RH BANK)(1MZ–FE) VALVE CLEARANCE(1MZ–FE) CAMSHAFT(LH BANK)(1MZ–FE)
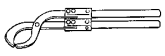	(09248–05410)	Valve Lifter Press	PARTIAL ENGINE ASSY(1MZ–FE) CAMSHAFT(RH BANK)(1MZ–FE) VALVE CLEARANCE(1MZ–FE) CAMSHAFT(LH BANK)(1MZ–FE)
	(09248–05420)	Valve Lifter Stopper	PARTIAL ENGINE ASSY(1MZ–FE) CAMSHAFT(RH BANK)(1MZ–FE) VALVE CLEARANCE(1MZ–FE) CAMSHAFT(LH BANK)(1MZ–FE)

	09249–63010	Torque Wrench Adaptor	CAMSHAFT(RH BANK)(1MZ–FE) CYLINDER HEAD GASKET(1MZ–FE) CYLINDER HEAD GASKET NO.2(1MZ–FE) CAMSHAFT(LH BANK)(1MZ–FE) PARTIAL ENGINE ASSY(2AZ–FE) TIMING GEAR CASE OR TIMING CHAIN CASE OIL SEAL(2AZ–FE) CYLINDER HEAD GASKET(2AZ–FE) FAN AND GENERATOR V BELT(2AZ–FE)
	09309–37010	Transmission Bearing Replacer	PARTIAL ENGINE ASSY(2AZ–FE) CHAIN(2AZ–FE) CYLINDER HEAD GASKET(2AZ–FE)
	09330–00021	Companion Flange Holding Tool	PARTIAL ENGINE ASSY(1MZ–FE) CAMSHAFT(RH BANK)(1MZ–FE) OIL PUMP SEAL(1MZ–FE) ENGINE REAR OIL SEAL(1MZ–FE) CYLINDER HEAD GASKET(1MZ–FE) CYLINDER HEAD GASKET NO.2(1MZ–FE) TIMING BELT(1MZ–FE) CAMSHAFT(LH BANK)(1MZ–FE) PARTIAL ENGINE ASSY(2AZ–FE) CHAIN(2AZ–FE) TIMING GEAR CASE OR TIMING CHAIN CASE OIL SEAL(2AZ–FE) ENGINE REAR OIL SEAL(2AZ–FE) CYLINDER HEAD GASKET(2AZ–FE)
	09520–01010	Drive Shaft Remover Attachment	PARTIAL ENGINE ASSY(1MZ–FE) CYLINDER HEAD GASKET(2AZ–FE)
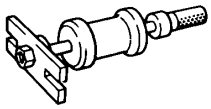	09520–24010	Differential Side Gear Shaft Puller	PARTIAL ENGINE ASSY(1MZ–FE) CYLINDER HEAD GASKET(2AZ–FE)
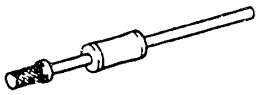	(09520–32040)	Shocker Set	PARTIAL ENGINE ASSY(1MZ–FE) CYLINDER HEAD GASKET(2AZ–FE)
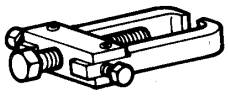	09628–62011	Boll Joint Puller	PARTIAL ENGINE ASSY(1MZ–FE) PARTIAL ENGINE ASSY(2AZ–FE)
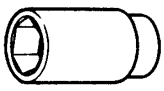	09816–30010	Oil Pressure Switch Socket	PARTIAL ENGINE ASSY(1MZ–FE) PARTIAL ENGINE ASSY(2AZ–FE)
	09843–18020	Diagnosis Check Wire	PARTIAL ENGINE ASSY(1MZ–FE) CYLINDER HEAD GASKET(1MZ–FE) CYLINDER HEAD GASKET NO.2(1MZ–FE) ENGINE ASSEMBLY(2AZ–FE)

	09843–18030	Tacho–pulse Pickup Wire No.2	ENGINE ASSEMBLY(1MZ–FE) PARTIAL ENGINE ASSY(1MZ–FE) CYLINDER HEAD GASKET(1MZ–FE) CYLINDER HEAD GASKET NO.2(1MZ–FE) ENGINE ASSEMBLY(2AZ–FE)
	09843–18040	Diagnosis Check Wire No.2	ENGINE ASSEMBLY(1MZ–FE) PARTIAL ENGINE ASSY(1MZ–FE) CYLINDER HEAD GASKET(1MZ–FE) CYLINDER HEAD GASKET NO.2(1MZ–FE) ENGINE ASSEMBLY(2AZ–FE)
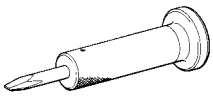	09930–00010	Drive Shaft Nut Chisel	PARTIAL ENGINE ASSY(1MZ–FE) PARTIAL ENGINE ASSY(2AZ–FE)
	09950–40011	Puller B Set	PARTIAL ENGINE ASSY(2AZ–FE) CHAIN(2AZ–FE) TIMING GEAR CASE OR TIMING CHAIN CASE OIL SEAL(2AZ–FE)
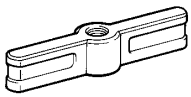	(09951–04010)	Hanger 150	PARTIAL ENGINE ASSY(2AZ–FE) CHAIN(2AZ–FE) TIMING GEAR CASE OR TIMING CHAIN CASE OIL SEAL(2AZ–FE)
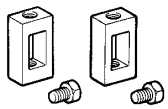	(09952–04010)	Slide Arm	PARTIAL ENGINE ASSY(2AZ–FE) CHAIN(2AZ–FE) TIMING GEAR CASE OR TIMING CHAIN CASE OIL SEAL(2AZ–FE)
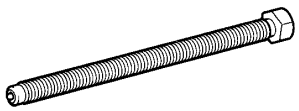	(09953–04030)	Center Bolt 200	PARTIAL ENGINE ASSY(2AZ–FE) CHAIN(2AZ–FE) TIMING GEAR CASE OR TIMING CHAIN CASE OIL SEAL(2AZ–FE)
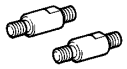	(09954–04010)	Arm 25	PARTIAL ENGINE ASSY(2AZ–FE) CHAIN(2AZ–FE) TIMING GEAR CASE OR TIMING CHAIN CASE OIL SEAL(2AZ–FE)
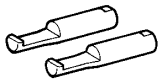	(09955–04041)	Claw No.4	PARTIAL ENGINE ASSY(2AZ–FE) CHAIN(2AZ–FE) TIMING GEAR CASE OR TIMING CHAIN CASE OIL SEAL(2AZ–FE)
	(09957–04010)	Attachment	PARTIAL ENGINE ASSY(2AZ–FE) CHAIN(2AZ–FE) TIMING GEAR CASE OR TIMING CHAIN CASE OIL SEAL(2AZ–FE) CYLINDER HEAD GASKET(2AZ–FE)
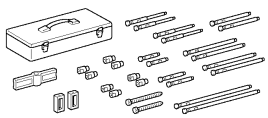	09950–50013	Puller C Set	PARTIAL ENGINE ASSY(1MZ–FE) CAMSHAFT(RH BANK)(1MZ–FE) OIL PUMP SEAL(1MZ–FE) CYLINDER HEAD GASKET(1MZ–FE) CYLINDER HEAD GASKET NO.2(1MZ–FE) TIMING BELT(1MZ–FE) CAMSHAFT(LH BANK)(1MZ–FE) PARTIAL ENGINE ASSY(2AZ–FE) CHAIN(2AZ–FE) TIMING GEAR CASE OR TIMING CHAIN CASE OIL SEAL(2AZ–FE)

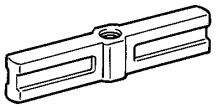	(09951–05010) Hanger 150	PARTIAL ENGINE ASSY(1MZ–FE) CAMSHAFT(RH BANK)(1MZ–FE) OIL PUMP SEAL(1MZ–FE) CYLINDER HEAD GASKET(1MZ–FE) CYLINDER HEAD GASKET NO.2(1MZ–FE) TIMING BELT(1MZ–FE) CAMSHAFT(LH BANK)(1MZ–FE) PARTIAL ENGINE ASSY(2AZ–FE) CHAIN(2AZ–FE) TIMING GEAR CASE OR TIMING CHAIN CASE OIL SEAL(2AZ–FE) CYLINDER HEAD GASKET(2AZ–FE)
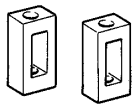	(09952–05010) Slide Arm	PARTIAL ENGINE ASSY(1MZ–FE) CAMSHAFT(RH BANK)(1MZ–FE) OIL PUMP SEAL(1MZ–FE) CYLINDER HEAD GASKET(1MZ–FE) CYLINDER HEAD GASKET NO.2(1MZ–FE) TIMING BELT(1MZ–FE) CAMSHAFT(LH BANK)(1MZ–FE) PARTIAL ENGINE ASSY(2AZ–FE) CHAIN(2AZ–FE) TIMING GEAR CASE OR TIMING CHAIN CASE OIL SEAL(2AZ–FE) CYLINDER HEAD GASKET(2AZ–FE)
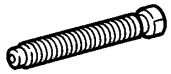	(09953–05010) Center Bolt 100	PARTIAL ENGINE ASSY(1MZ–FE) CAMSHAFT(RH BANK)(1MZ–FE) OIL PUMP SEAL(1MZ–FE) CYLINDER HEAD GASKET(1MZ–FE) CYLINDER HEAD GASKET NO.2(1MZ–FE) TIMING BELT(1MZ–FE) CAMSHAFT(LH BANK)(1MZ–FE)
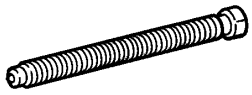	(09953–05020) Center Bolt 150	PARTIAL ENGINE ASSY(1MZ–FE) OIL PUMP SEAL(1MZ–FE) PARTIAL ENGINE ASSY(2AZ–FE) CHAIN(2AZ–FE) TIMING GEAR CASE OR TIMING CHAIN CASE OIL SEAL(2AZ–FE) CYLINDER HEAD GASKET(2AZ–FE)
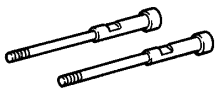	(09954–05010) Claw No.1	PARTIAL ENGINE ASSY(1MZ–FE) OIL PUMP SEAL(1MZ–FE)
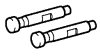	(09954–05021) Claw No.2	PARTIAL ENGINE ASSY(2AZ–FE) CHAIN(2AZ–FE) TIMING GEAR CASE OR TIMING CHAIN CASE OIL SEAL(2AZ–FE)
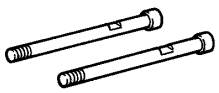	(09954–05030) Claw No.3	PARTIAL ENGINE ASSY(1MZ–FE) CAMSHAFT(RH BANK)(1MZ–FE) OIL PUMP SEAL(1MZ–FE) CYLINDER HEAD GASKET(1MZ–FE) CYLINDER HEAD GASKET NO.2(1MZ–FE) TIMING BELT(1MZ–FE) CAMSHAFT(LH BANK)(1MZ–FE)

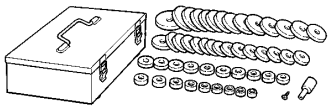	09950–60010	Replacer Set	PARTIAL ENGINE ASSY(1MZ–FE) CYLINDER BLOCK(2AZ–FE)
	(09951–00200)	Replacer 20	CYLINDER BLOCK(2AZ–FE)
	(09951–00430)	Replacer 43	PARTIAL ENGINE ASSY(1MZ–FE)
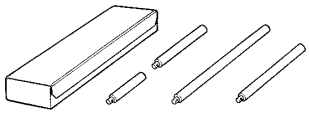	09950–70010	Handle Set	PARTIAL ENGINE ASSY(1MZ–FE) CYLINDER HEAD ASSY(1MZ–FE) ENGINE REAR OIL SEAL(1MZ–FE) PARTIAL ENGINE ASSY(2AZ–FE) CYLINDER HEAD ASSY(2AZ–FE) CYLINDER BLOCK(2AZ–FE) ENGINE REAR OIL SEAL(2AZ–FE)
	(09951–07100)	Handle 100	PARTIAL ENGINE ASSY(1MZ–FE) CYLINDER HEAD ASSY(1MZ–FE) ENGINE REAR OIL SEAL(1MZ–FE) PARTIAL ENGINE ASSY(2AZ–FE) CYLINDER HEAD ASSY(2AZ–FE) CYLINDER BLOCK(2AZ–FE) ENGINE REAR OIL SEAL(2AZ–FE)
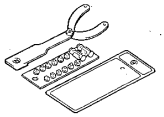	09960–10010	Variable Pin Wrench Set	PARTIAL ENGINE ASSY(1MZ–FE) CAMSHAFT(RH BANK)(1MZ–FE) OIL PUMP SEAL(1MZ–FE) CYLINDER HEAD GASKET(1MZ–FE) CYLINDER HEAD GASKET NO.2(1MZ–FE) TIMING BELT(1MZ–FE) CAMSHAFT(LH BANK)(1MZ–FE) PARTIAL ENGINE ASSY(2AZ–FE) CHAIN(2AZ–FE) TIMING GEAR CASE OR TIMING CHAIN CASE OIL SEAL(2AZ–FE) ENGINE REAR OIL SEAL(2AZ–FE)
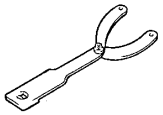	(09962–01000)	Variable Pin Wrench Arm Assy	PARTIAL ENGINE ASSY(1MZ–FE) CAMSHAFT(RH BANK)(1MZ–FE) OIL PUMP SEAL(1MZ–FE) CYLINDER HEAD GASKET(1MZ–FE) CYLINDER HEAD GASKET NO.2(1MZ–FE) TIMING BELT(1MZ–FE) CAMSHAFT(LH BANK)(1MZ–FE) PARTIAL ENGINE ASSY(2AZ–FE) CHAIN(2AZ–FE) TIMING GEAR CASE OR TIMING CHAIN CASE OIL SEAL(2AZ–FE) ENGINE REAR OIL SEAL(2AZ–FE)
	(09963–00500)	Pin 5	PARTIAL ENGINE ASSY(1MZ–FE) CAMSHAFT(RH BANK)(1MZ–FE) CAMSHAFT(LH BANK)(1MZ–FE)

	(09963–00700)	Pin 7	PARTIAL ENGINE ASSY(2AZ–FE)
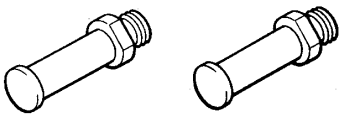	(09963–01000)	Pin 10	PARTIAL ENGINE ASSY(1MZ–FE) CAMSHAFT(RH BANK)(1MZ–FE) OIL PUMP SEAL(1MZ–FE) CYLINDER HEAD GASKET(1MZ–FE) CYLINDER HEAD GASKET NO.2(1MZ–FE) TIMING BELT(1MZ–FE) CAMSHAFT(LH BANK)(1MZ–FE) PARTIAL ENGINE ASSY(2AZ–FE) CHAIN(2AZ–FE) TIMING GEAR CASE OR TIMING CHAIN CASE OIL SEAL(2AZ–FE) ENGINE REAR OIL SEAL(2AZ–FE)
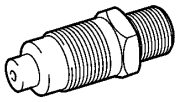	09992–00500	Compression Gauge Attachment	ENGINE ASSEMBLY(1MZ–FE) CYLINDER HEAD GASKET(1MZ–FE) CYLINDER HEAD GASKET NO.2(1MZ–FE)

Recomended Tools

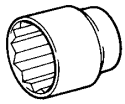	09011–12301	Socket Wrench 30 mm	PARTIAL ENGINE ASSY(1MZ–FE) PARTIAL ENGINE ASSY(2AZ–FE)
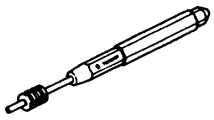	09031–00040	Pin Punch .	CYLINDER HEAD ASSY(2AZ–FE)
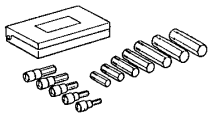	09040–00011	Hexagon Wrench Set	PARTIAL ENGINE ASSY(1MZ–FE) CYLINDER HEAD ASSY(1MZ–FE) CYLINDER BLOCK(1MZ–FE) CAMSHAFT(RH BANK)(1MZ–FE) CYLINDER HEAD GASKET(1MZ–FE) CYLINDER HEAD GASKET NO.2(1MZ–FE) VALVE CLEARANCE(1MZ–FE) CAMSHAFT(LH BANK)(1MZ–FE) PARTIAL ENGINE ASSY(2AZ–FE)
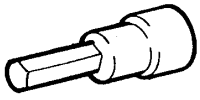	(09043–20050)	Socket Hexagon Wrench 5	PARTIAL ENGINE ASSY(1MZ–FE) CAMSHAFT(RH BANK)(1MZ–FE) CYLINDER HEAD GASKET(1MZ–FE) CYLINDER HEAD GASKET NO.2(1MZ–FE) VALVE CLEARANCE(1MZ–FE) CAMSHAFT(LH BANK)(1MZ–FE)
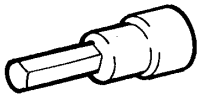	(09043–20060)	Socket Hexagon Wrench 6	PARTIAL ENGINE ASSY(1MZ–FE) PARTIAL ENGINE ASSY(2AZ–FE)
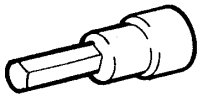	(09043–20080)	Socket Hexagon Wrench 8	PARTIAL ENGINE ASSY(1MZ–FE) CAMSHAFT(RH BANK)(1MZ–FE) CYLINDER HEAD GASKET(1MZ–FE) CYLINDER HEAD GASKET NO.2(1MZ–FE) VALVE CLEARANCE(1MZ–FE)

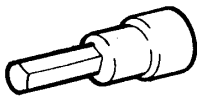	(09043–20100) Socket Hexagon Wrench 10	PARTIAL ENGINE ASSY(1MZ–FE) CYLINDER BLOCK(1MZ–FE) PARTIAL ENGINE ASSY(2AZ–FE)
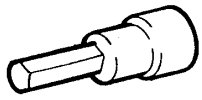	(09043–20050) Socket Hexagon Wrench 5	PARTIAL ENGINE ASSY(1MZ–FE) CAMSHAFT(RH BANK)(1MZ–FE) CYLINDER HEAD GASKET(1MZ–FE) CYLINDER HEAD GASKET NO.2(1MZ–FE) VALVE CLEARANCE(1MZ–FE) CAMSHAFT(LH BANK)(1MZ–FE)
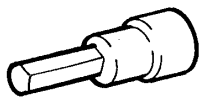	(09043–20060) Socket Hexagon Wrench 6	PARTIAL ENGINE ASSY(1MZ–FE) PARTIAL ENGINE ASSY(2AZ–FE)
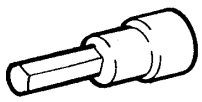	(09043–20080) Socket Hexagon Wrench 8	PARTIAL ENGINE ASSY(1MZ–FE) CAMSHAFT(RH BANK)(1MZ–FE) CYLINDER HEAD GASKET(1MZ–FE) CYLINDER HEAD GASKET NO.2(1MZ–FE) VALVE CLEARANCE(1MZ–FE)
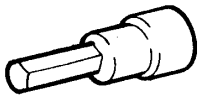	(09043–20100) Socket Hexagon Wrench 10	PARTIAL ENGINE ASSY(1MZ–FE) CYLINDER BLOCK(1MZ–FE) PARTIAL ENGINE ASSY(2AZ–FE)
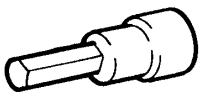	(09043–20120) Socket Hexagon Wrench 12	PARTIAL ENGINE ASSY(1MZ–FE) PARTIAL ENGINE ASSY(2AZ–FE)
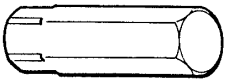	(09043–30140) Straight Hexagon Wrench 14	CYLINDER HEAD ASSY(1MZ–FE)
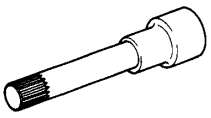	09043–50100 Bi–hexagon Wrench 10 mm	PARTIAL ENGINE ASSY(2AZ–FE) CYLINDER HEAD GASKET(2AZ–FE)
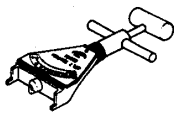	09216–00021 Belt Tension Gauge	ENGINE ASSEMBLY(1MZ–FE) PARTIAL ENGINE ASSY(1MZ–FE) CAMSHAFT(RH BANK)(1MZ–FE) OIL PUMP SEAL(1MZ–FE) CYLINDER HEAD GASKET(1MZ–FE) CYLINDER HEAD GASKET NO.2(1MZ–FE) DRIVE BELT(1MZ–FE) TIMING BELT(1MZ–FE) CAMSHAFT(LH BANK)(1MZ–FE)
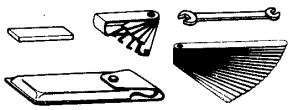	09200–00010 Engine Adjust Kit .	IGNITION SYSTEM(1MZ–FE) IGNITION SYSTEM(2AZ–FE)
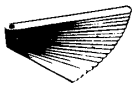	(09203–00010) Thickness Gauge	PARTIAL ENGINE ASSY(2AZ–FE)

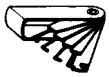 (09857–00031)	Spark Plug Gap Gauge	ENGINE ASSEMBLY(1MZ–FE) ENGINE ASSEMBLY(2AZ–FE)
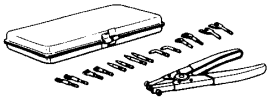 09904–00010	Expander Set	PARTIAL ENGINE ASSY(1MZ–FE) CAMSHAFT(RH BANK)(1MZ–FE) CAMSHAFT(LH BANK)(1MZ–FE)
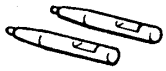 (09904–00040)	No. 3 Claw	PARTIAL ENGINE ASSY(1MZ–FE) CAMSHAFT(RH BANK)(1MZ–FE) CAMSHAFT(LH BANK)(1MZ–FE)

Equipment

12 mm Socket Wrench for 12 Pointed Head	
Reamer	
V–block	
Piston ring compressor	
Piston ring expander	
Valve seat cutter	
CO/HC meter	
Compression gauge	
Connecting rod aligner	
Cylinder gauge	
Feeler gauge	
Micrometer	
Precision straight edge	
Radiator cap tester	
Steel square	
Tachometer	
Torque wrench	
Hexagon Wrench Set	
Vernier calipers	
Dial indicator with magneticbase	
Tire pressure gauge	
Alignment tester	
Toe–in gauge	
Spring tension gauge	
OBD II scan tool	
Engine Sling Device	
Chain Block	
Spark plug cleaner	
Spring tester	
Plastigage	
Angle gauge	
Heater	
Universal engine lifter	
Plastic Hammer	
Chisel	

SSM

08826–00080	Seal Packing Black or equivalent (FIPG)	PARTIAL ENGINE ASSY(1MZ–FE) CYLINDER HEAD ASSY(1MZ–FE) CAMSHAFT(RH BANK)(1MZ–FE) CYLINDER HEAD GASKET(1MZ–FE) CYLINDER HEAD GASKET NO.2(1MZ–FE) VALVE CLEARANCE(1MZ–FE) CAMSHAFT(LH BANK)(1MZ–FE) PARTIAL ENGINE ASSY(2AZ–FE) CHAIN(2AZ–FE) CAMSHAFT(2AZ–FE) CYLINDER HEAD GASKET(2AZ–FE) VALVE CLEARANCE(2AZ–FE)
08826–00100	”Seal Packing 1282B,” THREE BOND 1282B or equivalent (FIPG)	PARTIAL ENGINE ASSY(1MZ–FE) CYLINDER BLOCK(1MZ–FE) PARTIAL ENGINE ASSY(2AZ–FE)
08833–00070	”Adhesive 1324,” THREE BOND 1324 or equivalent	PARTIAL ENGINE ASSY(1MZ–FE) CYLINDER HEAD ASSY(1MZ–FE) CYLINDER BLOCK(1MZ–FE) ENGINE REAR OIL SEAL(1MZ–FE) PARTIAL ENGINE ASSY(2AZ–FE) CYLINDER BLOCK(2AZ–FE) ENGINE REAR OIL SEAL(2AZ–FE)

EXHAUST

020TO–01

PREPARATION

Equipment

Torque wrench	

COOLING

PREPARATION

020TP–01

SST

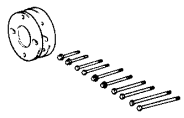	09213–54015	Crankshaft Pulley Holding Tool	WATER PUMP ASSY(1MZ–FE)
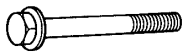	(91651–60855)	Bolt	WATER PUMP ASSY(1MZ–FE)
	09249–63010	Torque Wrench Adaptor	WATER PUMP ASSY(1MZ–FE) WATER PUMP ASSY(2AZ–FE)
	09330–00021	Companion Flange Holding Tool	WATER PUMP ASSY(1MZ–FE)
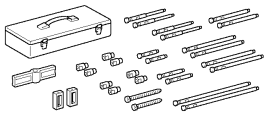	09950–50013	Puller C Set	WATER PUMP ASSY(1MZ–FE)
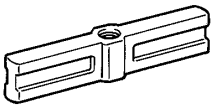	(09951–05010)	Hanger 150	WATER PUMP ASSY(1MZ–FE)
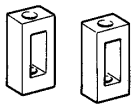	(09952–05010)	Slide Arm	WATER PUMP ASSY(1MZ–FE)
	(09953–05010)	Center Bolt 100	WATER PUMP ASSY(1MZ–FE)
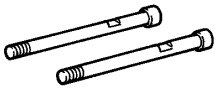	(09954–05030)	Claw No.3	WATER PUMP ASSY(1MZ–FE)
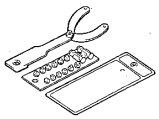	09960–10010	Variable Pin Wrench Set	WATER PUMP ASSY(1MZ–FE) WATER PUMP ASSY(2AZ–FE)
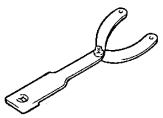	(09962–01000)	Variable Pin Wrench Arm Assy	WATER PUMP ASSY(1MZ–FE) WATER PUMP ASSY(2AZ–FE)
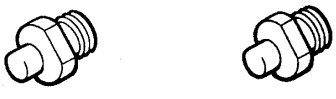	(09963–00700)	Pin 7	WATER PUMP ASSY(2AZ–FE)

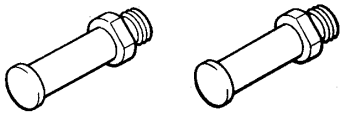	(09963–01000)	Pin 10	WATER PUMP ASSY(1MZ–FE)
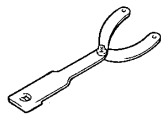	(09962–01000)	Variable Pin Wrench Arm Assy	WATER PUMP ASSY(1MZ–FE) WATER PUMP ASSY(2AZ–FE)
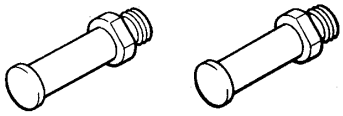	(09963–01000)	Pin 10	WATER PUMP ASSY(1MZ–FE)

Recomended Tools

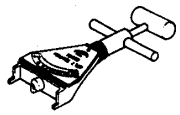	09216–00021	Belt Tension Gauge	WATER PUMP ASSY(1MZ–FE)

Equipment

Ohmmeter	
Radiator cap tester	
Thermomete	
Torque wrench	
Vernier calipers	
Heater	

SSM

	08826–00080	Seal Packing Black or equivalent (FIPG)	WATER PUMP ASSY(1MZ–FE) WATER PUMP ASSY(2AZ–FE)

LUBRICATION

PREPARATION

020TT–01

SST

	09032–00100	Oil Pan Seal Cutter	OIL PUMP ASSY(1MZ–FE) OIL PUMP ASSY(2AZ–FE)
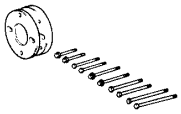	09213–54015	Crankshaft Pulley Holding Tool	OIL PUMP ASSY(1MZ–FE) OIL PUMP ASSY(2AZ–FE)
	(91651–60855)	Bolt	OIL PUMP ASSY(1MZ–FE) OIL PUMP ASSY(2AZ–FE)
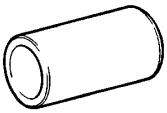	09223–00010	Cover & Seal Replacer	OIL PUMP ASSY(1MZ–FE)
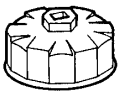	09228–06501	Oil Filter Wrench	OIL FILTER SUB–ASSY(2AZ–FE)
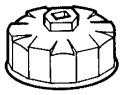	09228–07501	Oil Filter Wrench	OIL FILTER SUB–ASSY(1MZ–FE)
	09249–63010	Torque Wrench Adaptor	OIL PUMP ASSY(1MZ–FE) OIL PUMP ASSY(2AZ–FE)
	09309–37010	Transmission Bearing Replacer	OIL PUMP ASSY(2AZ–FE)
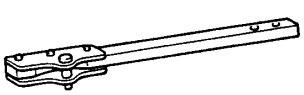	09330–00021	Companion Flange Holding Tool	OIL PUMP ASSY(1MZ–FE) OIL PUMP ASSY(2AZ–FE)
	09950–40011	Puller B Set	OIL PUMP ASSY(2AZ–FE)
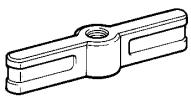	(09951–04010)	Hanger 150	OIL PUMP ASSY(2AZ–FE)
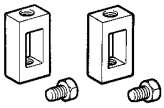	(09952–04010)	Slide Arm	OIL PUMP ASSY(2AZ–FE)

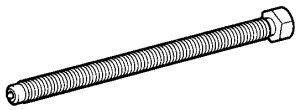	(09953–04030)	Center Bolt 200	OIL PUMP ASSY(2AZ–FE)
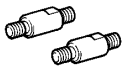	(09954–04010)	Arm 25	OIL PUMP ASSY(2AZ–FE)
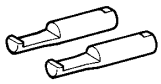	(09955–04041)	Claw No.4	OIL PUMP ASSY(2AZ–FE)
	(09957–04010)	Attachment	OIL PUMP ASSY(2AZ–FE)
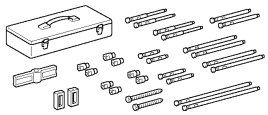	09950–50013	Puller C Set	OIL PUMP ASSY(1MZ–FE) OIL PUMP ASSY(2AZ–FE)
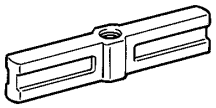	(09951–05010)	Hanger 150	OIL PUMP ASSY(1MZ–FE) OIL PUMP ASSY(2AZ–FE)
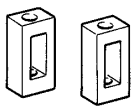	(09952–05010)	Slide Arm	OIL PUMP ASSY(1MZ–FE) OIL PUMP ASSY(2AZ–FE)
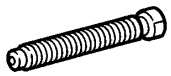	(09953–05010)	Center Bolt 100	OIL PUMP ASSY(1MZ–FE)
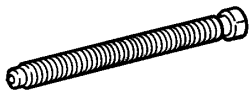	(09953–05020)	Center Bolt 150	OIL PUMP ASSY(1MZ–FE) OIL PUMP ASSY(2AZ–FE)
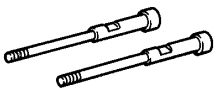	(09954–05010)	Claw No.1	OIL PUMP ASSY(1MZ–FE)
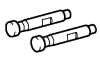	(09954–05021)	Claw No.2	OIL PUMP ASSY(2AZ–FE)
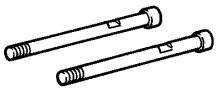	(09954–05030)	Claw No.3	OIL PUMP ASSY(1MZ–FE)
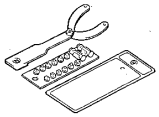	09960–10010	Variable Pin Wrench Set	OIL PUMP ASSY(1MZ–FE) OIL PUMP ASSY(2AZ–FE)

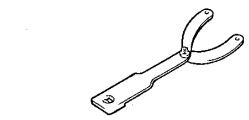	(09962–01000)	Variable Pin Wrench Arm Assy	OIL PUMP ASSY(1MZ–FE) OIL PUMP ASSY(2AZ–FE)
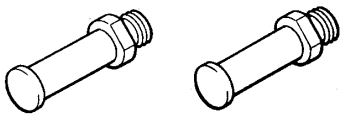	(09963–01000)	Pin 10	OIL PUMP ASSY(1MZ–FE) OIL PUMP ASSY(2AZ–FE)

Recomended Tools

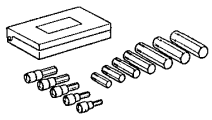	09040–00011	Hexagon Wrench Set	OIL PUMP ASSY(1MZ–FE)
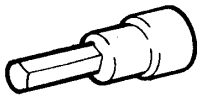	(09043–20100)	Socket Hexagon Wrench 10	OIL PUMP ASSY(1MZ–FE)
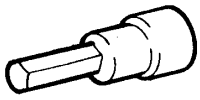	(09043–20100)	Socket Hexagon Wrench 10	OIL PUMP ASSY(1MZ–FE)
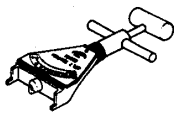	09216–00021	Belt Tension Gauge	OIL PUMP ASSY(1MZ–FE)

Equipment

Feeler gauge	
Precision straight edge	
Radiator cap tester	
Torque wrench	

SSM

	08826–00080	Seal Packing Black or equivalent (FIPG)	OIL PUMP ASSY(1MZ–FE) OIL PUMP ASSY(2AZ–FE)

IGNITION

020TQ–01

PREPARATION

Recomended Tools

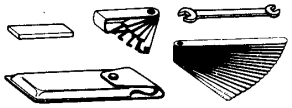	09200–00010	Engine Adjust Kit .	IGNITION SYSTEM(1MZ–FE) IGNITION SYSTEM(2AZ–FE)
	(09857–00031)	Spark Plug Gap Gauge	IGNITION SYSTEM(1MZ–FE) IGNITION SYSTEM(2AZ–FE)

Equipment

Spark plug cleaner	
Torque wrench	

STARTING & CHARGING

020TR–01

PREPARATION

SST

	09249–63010	Torque Wrench Adaptor	GENERATOR ASSY(2AZ–FE)
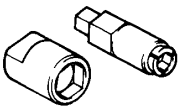	09820–63010	Alternator Pulley Set Nut Wrench Set	GENERATOR ASSY(1MZ–FE) GENERATOR ASSY(2AZ–FE)
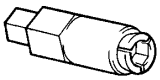	(09820–06010)	Alternator Rotor Shaft Wrench	GENERATOR ASSY(1MZ–FE) GENERATOR ASSY(2AZ–FE)
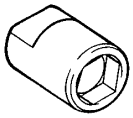	(09820–06020)	Alternator Pulley Set Nut 22 mm Wrench	GENERATOR ASSY(1MZ–FE) GENERATOR ASSY(2AZ–FE)

Recomended Tools

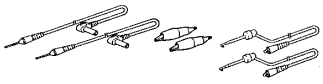	(09083–00150)	Test Lead Set	STARTING SYSTEM(1MZ–FE) GENERATOR ASSY(1MZ–FE) STARTER ASSY(1MZ–FE) GENERATOR ASSY(2AZ–FE) STARTER ASSY(2AZ–FE) STARTING SYSTEM(2AZ–FE)
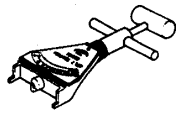	09216–00021	Belt Tension Gauge	GENERATOR ASSY(1MZ–FE)
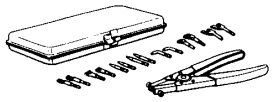	09904–00010	Expander Set	STARTER ASSY(1MZ–FE) STARTER ASSY(2AZ–FE)

Equipment

Dial indicator	
Ammmeter(A)	
Ohmmeter	
Torque wrench	
V–block	
Vernier calipers	
Dial indicator with magnetic base	
Press	

FRONT SUSPENSION

020TC–01

PREPARATION

SST

	09023–00100	Union Nut Wrench 10 mm	STABILIZER BAR FRONT
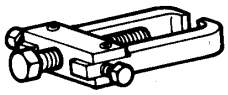	09628–62011	Boll Joint Puller	LOWER BALL JOINT ASSY FRONT LH STABILIZER BAR FRONT
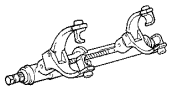	09727–30021	Coil Spring Compressor	FRONT SHOCK ABSORBER WITH COIL SPRING
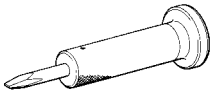	09930–00010	Drive Shaft Nut Chisel	LOWER BALL JOINT ASSY FRONT LH

Recomended Tools

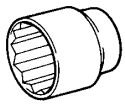	09011–12301	Socket Wrench 30 mm	LOWER BALL JOINT ASSY FRONT LH
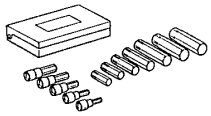	09040–00011	Hexagon Wrench Set	FRONT SHOCK ABSORBER WITH COIL SPRING STABILIZER BAR FRONT
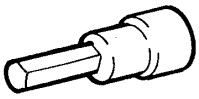	(09043–20060)	Socket Hexagon Wrench 6	FRONT SHOCK ABSORBER WITH COIL SPRING STABILIZER BAR FRONT

Equipment

Torque wrench	
Dial indicator with magnetic base	
Tire pressure gauge	
Alignment tester	
Toe–in gauge	
Angle gauge	
Plastic hammer	
Engine Sling Device	
Universal Engine Lifter	
Chain Block	

REAR SUSPENSION

PREPARATION

020U5–01

SST

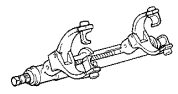	09727–30021	Coil Spring Compressor	SHOCK ABSORBER ASSY REAR LH

Recomended Tools

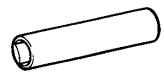	09017–38120	Deep Socket Wrench 12 mm	SHOCK ABSORBER ASSY REAR LH
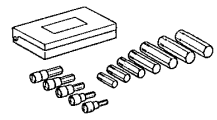	09040–00011	Hexagon Wrench Set	SHOCK ABSORBER ASSY REAR LH REAR SUSPENSION ARM ASSY NO.1 LH REAR SUSPENSION ARM ASSY NO.2 LH STABILIZER BAR REAR
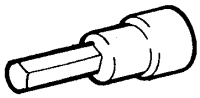	(09043–20050)	Socket Hexagon Wrench 5	SHOCK ABSORBER ASSY REAR LH REAR SUSPENSION ARM ASSY NO.1 LH REAR SUSPENSION ARM ASSY NO.2 LH STABILIZER BAR REAR
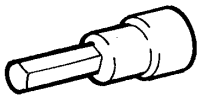	(09043–20060)	Socket Hexagon Wrench 6	SHOCK ABSORBER ASSY REAR LH

Equipment

Torque wrench	
Dial indicator with magnetic base	
Wheel balancer	
Tire pressure gauge	
Alignment tester	
Toe–in gauge	
Camber–caster–kingpin gauge	
Drill	

TIRE & WHEEL

020T4–01

PREPARATION

Equipment

Tire pressure gauge	
Dial indicator with magnetic base	
Wheel balancer	

DRIVE SHAFT / PROPELLER SHAFT

020TJ–01

PREPARATION

SST

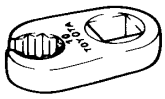	09023–00100	Union Nut Wrench 10 mm	REAR AXLE CARRIER SUB–ASSY LH
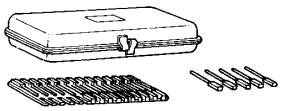	09240–00020	Wire Gauge Set	FRONT DRIVE SHAFT
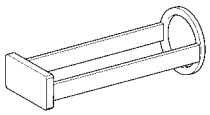	09387–00020	Direct Clutch Wrench	FRONT DRIVE SHAFT
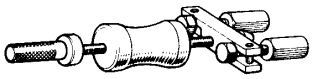	09520–00031	Rear Axle Shaft Puller	FRONT AXLE HUB SUB–ASSY LH
	09520–01010	Drive Shaft Remover Attachment	FRONT DRIVE SHAFT
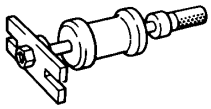	09520–24010	Differential Side Gear Shaft Puller	FRONT DRIVE SHAFT
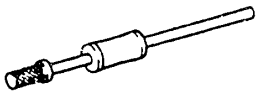	(09520–32040)	Shocker Set	FRONT DRIVE SHAFT
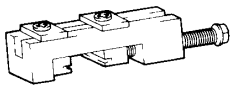	09521–24010	Rear Axle Shaft Puller	FRONT DRIVE SHAFT
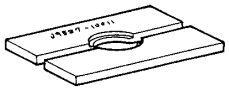	09527–10011	Rear Axle Shaft Bearing Remover	FRONT DRIVE SHAFT
	09527–17011	Rear Axle Shaft Bearing Remover	FRONT AXLE HUB SUB–ASSY LH
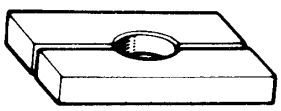	09527–30010	Rear Axle Shaft Bearing Remover	FRONT DRIVE SHAFT
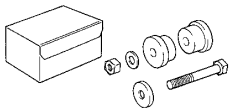	09608–16042	Front Hub Bearing Adjusting Tool	FRONT DRIVE SHAFT

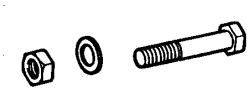	(09608–02021)	Bolt & Nut	FRONT DRIVE SHAFT
	(09608–02041)	Retainer	FRONT DRIVE SHAFT
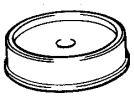	09608–32010	Steering Knuckle Oil Seal Replacer	FRONT AXLE HUB SUB–ASSY LH
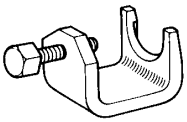	09628–10011	Ball Joint Puller	FRONT AXLE LH HUB BOLT REAR AXLE LH HUB BOLT
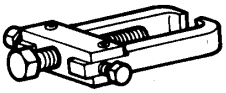	09628–62011	Boll Joint Puller	FRONT AXLE HUB SUB–ASSY LH FRONT DRIVE SHAFT
	09726–40010	Lower Control Shaft Bearing Replacer	FRONT DRIVE SHAFT
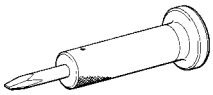	09930–00010	Drive Shaft Nut Chisel	FRONT AXLE HUB SUB–ASSY LH FRONT DRIVE SHAFT
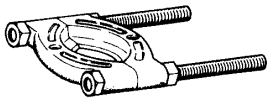	09950–00020	Bearing Remover	FRONT AXLE HUB SUB–ASSY LH FRONT DRIVE SHAFT
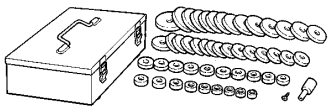	09950–60010	Replacer Set	FRONT AXLE HUB SUB–ASSY LH
	(09951–00410)	Replacer 41	FRONT AXLE HUB SUB–ASSY LH
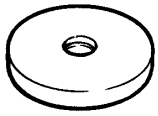	(09951–00600)	Replacer 60	FRONT AXLE HUB SUB–ASSY LH
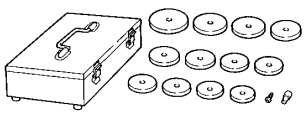	09950–60020	Replacer Set No.2	FRONT AXLE HUB SUB–ASSY LH
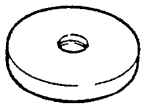	(09951–00790)	Replacer 79	FRONT AXLE HUB SUB–ASSY LH

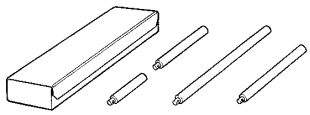	09950–70010	Handle Set	FRONT AXLE HUB SUB–ASSY LH
	(09951–07100)	Handle 100	FRONT AXLE HUB SUB–ASSY LH

Recomended Tools

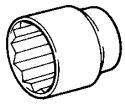	09011–12301	Socket Wrench 30 mm	FRONT AXLE HUB SUB–ASSY LH FRONT DRIVE SHAFT
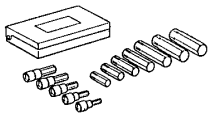	09040–00011	Hexagon Wrench Set	FRONT DRIVE SHAFT
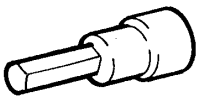	(09043–20060)	Socket Hexagon Wrench 6	FRONT DRIVE SHAFT
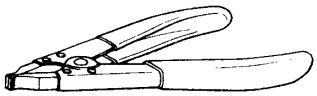	09905–00012	Snap Ring No.1 Expander	FRONT DRIVE SHAFT
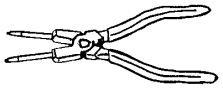	09905–00013	Snap Ring Pliers	FRONT AXLE HUB SUB–ASSY LH

Equipment

Torque wrench	
Dial indicator with magnetic base	
Alingment tester	
Toe–in gauge	
Angle gauge	

Lubricant

Item		Capacity
Front drive shaft		
1MZ–FE/2AZ–FE (MT)	Outboard joint grease	105 – 125 g (3.7 – 4.4 oz.)
2AZ–FE (AT)	Outboard joint grease	100 – 120 g (3.5 – 4.2 oz.)
	Inboard joint grease	185 – 195 g (6.5 – 6.9 oz.)

BRAKE

PREPARATION

020UN–01

SST

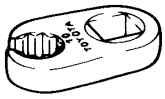	09023–00100	Union Nut Wrench 10 mm	BRAKE FLUID BRAKE BOOSTER ASSY FRONT BRAKE BRAKE ACTUATOR ASSY ABS & TRACTION ACTUATOR ASSY BRAKE MASTER CYLINDER SUB–ASSY REAR DRUM BRAKE REAR DISC BRAKE PROPORTIONING VALVE ASSY
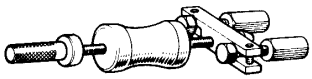	09520–00031	Rear Axle Shaft Puller	SKID CONTROL SENSOR
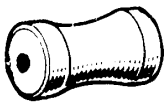	(09520–00040)	Shocker	SKID CONTROL SENSOR
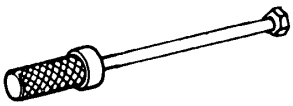	09521–00020	Drive Shaft Boot Clamping Tool	SKID CONTROL SENSOR
	09703–30010	Brake Shoe Return Spring Tool	REAR DRUM BRAKE
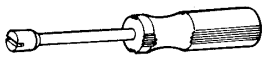	09718–00010	Shoe Hold Down Spring Driver	REAR DRUM BRAKE
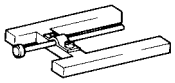	09737–00011	Brake Booster Push Rod Gauge	BRAKE BOOSTER ASSY BRAKE MASTER CYLINDER SUB–ASSY
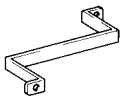	09737–00020	Brake Booster Push Rod Wrench	BRAKE BOOSTER ASSY BRAKE MASTER CYLINDER SUB–ASSY
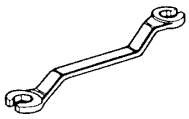	09751–36011	Brake Line Union Nut 10 x 12 mm Wrench	REAR DRUM BRAKE
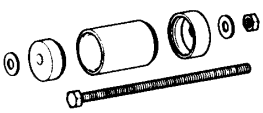	09830–36010	Front Mounting Cushion Remover & Replacer	SKID CONTROL SENSOR
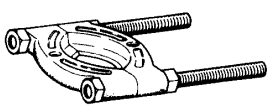	09950–00020	Bearing Remover	SKID CONTROL SENSOR

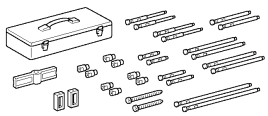	09950–50013	Puller C Set	STEERING SENSOR BRAKE PEDAL SUPPORT ASSY
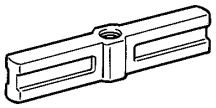	(09951–05010)	Hanger 150	STEERING SENSOR BRAKE PEDAL SUPPORT ASSY
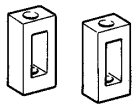	(09952–05010)	Slide Arm	STEERING SENSOR BRAKE PEDAL SUPPORT ASSY
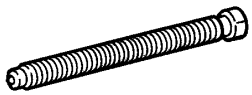	(09953–05020)	Center Bolt 150	STEERING SENSOR BRAKE PEDAL SUPPORT ASSY
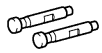	(09954–05021)	Claw No.2	STEERING SENSOR BRAKE PEDAL SUPPORT ASSY
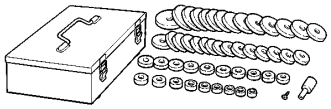	09950–60010	Replacer Set	SKID CONTROL SENSOR
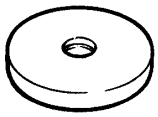	(09951–00650)	Replacer 65	SKID CONTROL SENSOR
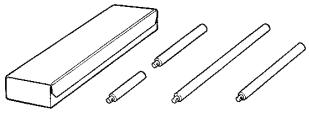	09950–70010	Handle Set	SKID CONTROL SENSOR
	(09951–07100)	Handle 100	SKID CONTROL SENSOR
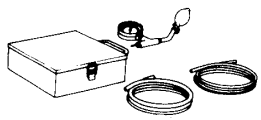	09992–00242	Turbocharger Pressure Gauge	BRAKE FLUID
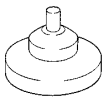	09992–00350	Brake Reservoir Pressure Adapter	BRAKE FLUID

Recomended Tools

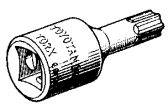	09042–00010	Torx Socket T30	STEERING SENSOR BRAKE PEDAL SUPPORT ASSY
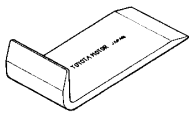	09070–20010	Moulding Remover	BRAKE PEDAL SUPPORT ASSY

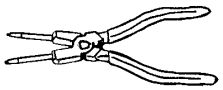	09905–00013 Snap Ring Pliers	BRAKE MASTER CYLINDER SUB–ASSY

Equipment

Vernier calipers	
Dial indicator	
Torque wrench	
Brake drum gauge	

Lubricant

Item	Capacity	Classification
Brake fluid	–	SAE J1703 or FMVSS No. 116 DOT3

PARKING BRAKE

020UQ–01

PREPARATION

Recomended Tools

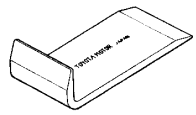	09070–20010 Moulding Remover	PARKING BRAKE CONTROL PEDAL ASSY PARKING BRAKE CABLE ASSY NO.1

Equipment

Brake drum gauge	
Torque wrench	

AUTOMATIC TRANSMISSION / TRANS

020U2–01

PREPARATION

SST

	09023–12700	Union Nut Wrench 17mm	AUTOMATIC TRANSAXLE ASSY(1MZ–FE) AUTOMATIC TRANSAXLE ASSY(2AZ–FE)
	09223–15020	Oil Seal & Bearing Replacer	FRONT DIFFERENTIAL OIL SEAL(U140E)
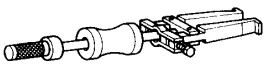	09308–00010	Oil Seal Puller	FRONT DIFFERENTIAL OIL SEAL(U140E) FRONT DIFFERENTIAL OIL SEAL(U241E)
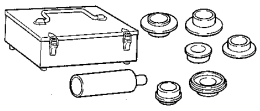	09316–60011	Transmission & Transfer Bearing Replacer	FRONT DIFFERENTIAL OIL SEAL(U140E) FRONT DIFFERENTIAL OIL SEAL(U241E)
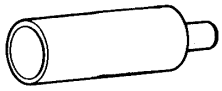	(09316–00011)	Replacer Pipe	FRONT DIFFERENTIAL OIL SEAL(U140E) FRONT DIFFERENTIAL OIL SEAL(U241E)
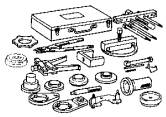	09350–32014	TOYOTA Automatic Transmission Tool Set	TORQUE CONVERTER CLUTCH AND DRIVE PLATE AUTOMATIC TRANSAXLE ASSY(1MZ–FE) AUTOMATIC TRANSAXLE ASSY(2AZ–FE)
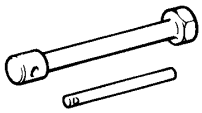	(09351–32010)	One–way Clutch Test Tool	TORQUE CONVERTER CLUTCH AND DRIVE PLATE AUTOMATIC TRANSAXLE ASSY(1MZ–FE) AUTOMATIC TRANSAXLE ASSY(2AZ–FE)
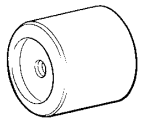	09649–17010	Steering Knuckle Tool	FRONT DIFFERENTIAL OIL SEAL(U241E)
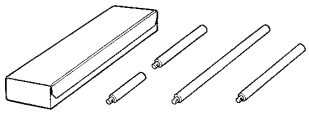	09950–70010	Handle Set	FRONT DIFFERENTIAL OIL SEAL(U140E) FRONT DIFFERENTIAL OIL SEAL(U241E)
	(09951–07150)	Handle 150	FRONT DIFFERENTIAL OIL SEAL(U140E) FRONT DIFFERENTIAL OIL SEAL(U241E)

Equipment

Straight edge	Torque converter
Vernier calipers	Torque converter
Dial indicator or dial indicator with magnetic base	Drive plate
Punch	
Torque wrench	

Lubricant

Item	Capacity	Classification
U140E: Automatic transaxle fluid Dry fill Drain and refill	 8.60 liters (9.1 US qts, 7.6 lmp.qts) 3.50 liters (3.7 US qts, 3.1 lmp.qts)	ATF Type T–IV
U241E: Automatic transaxle fluid Dry fill Drain and refill	 8.20 liters (8.7 US qts, 7.2 lmp.qts) 3.90 liters (4.1 US qts, 3.4 lmp.qts)	ATF Type T–IV

SSM (Special Service Materials)

08833–00070	”Adhesive 1324,” THREE BOND 1324 or equivalent	
08833–00080	Adhesive 1344 THREE BOND 1344 LOCTITE 242 or equivalent	

MANUAL TRANSMISSION/TRANSAXLE

020UF–01

PREPARATION

SST

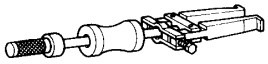	09308–00010	Oil Seal Puller	FRONT DIFFERENTIAL OIL SEAL MANUAL TRANSAXLE ASSY(E351)
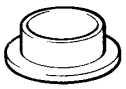	09316–20011	Transfer Bearing Replacer	MANUAL TRANSAXLE ASSY(E351)
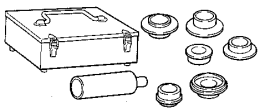	09316–60011	Transmission & Transfer Bearing Replacer	INPUT SHAFT ASSY(E351) OUTPUT SHAFT ASSY(E351)
	(09316–00031)	Replacer ”B”	OUTPUT SHAFT ASSY(E351)
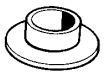	(09316–00041)	Replacer ”C”	INPUT SHAFT ASSY(E351)
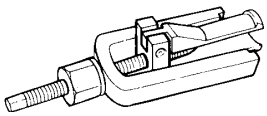	09319–60020	Output Shaft Needle Roller Bearing Remover	MANUAL TRANSAXLE ASSY(E351) SHIFT & SELECT LEVER SHAFT ASSY(E351)
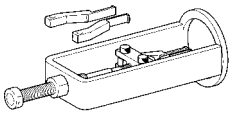	09387–00041	Bearing Puller Assembly	MANUAL TRANSAXLE ASSY(E351)
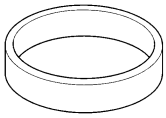	(09387–02010)	Oil Seal Replacer	MANUAL TRANSAXLE ASSY(E351)
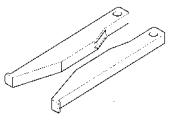	(09387–02020)	One–way Clutch Test Tool Set	MANUAL TRANSAXLE ASSY(E351)
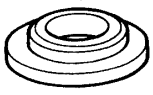	09506–30012	Differential Drive Pinion Rear Bearing Cone Replacer	OUTPUT SHAFT ASSY(E351)
	09520–01010	Drive Shaft Remover Attachment	FRONT DIFFERENTIAL OIL SEAL
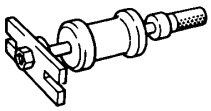	09520–24010	Differential Side Gear Shaft Puller	FRONT DIFFERENTIAL OIL SEAL

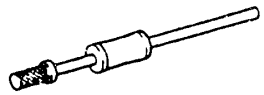	(09520–32040)	Shocker Set	FRONT DIFFERENTIAL OIL SEAL
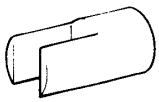	09564–32011	Differential Preload Adaptor	MANUAL TRANSAXLE ASSY(E351)
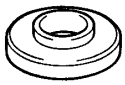	09608–00071	Drive Pinion Rear Bearing Cone Replacer	INPUT SHAFT ASSY(E351) OUTPUT SHAFT ASSY(E351)
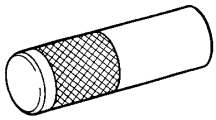	09608–06041	Front Hub Inner Bearing Cone Replacer	INPUT SHAFT ASSY(E351)
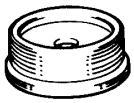	09608–10010	Steering Knuckle Oil Seal Replacer	FRONT DIFFERENTIAL OIL SEAL MANUAL TRANSAXLE ASSY(E351)
	09608–32010	Steering Knuckle Oil Seal Replacer	FRONT DIFFERENTIAL OIL SEAL MANUAL TRANSAXLE ASSY(E351)
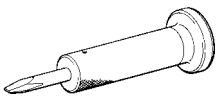	09930–00010	Drive Shaft Nut Chisel	MANUAL TRANSAXLE ASSY MANUAL TRANSAXLE ASSY(E351) DIFFERENTIAL CASE ASSY(E351)
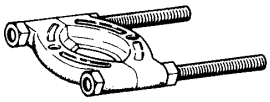	09950–00020	Bearing Remover	MANUAL TRANSAXLE ASSY(E351) INPUT SHAFT ASSY(E351) OUTPUT SHAFT ASSY(E351)
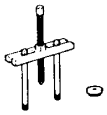	09950–00030	Bearing Remover Attachment	MANUAL TRANSAXLE ASSY(E351)
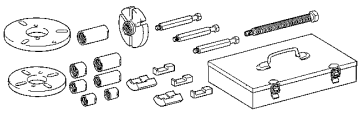	09950–30012	Puller A Set	MANUAL TRANSAXLE ASSY(E351)
	(09951–03010)	Upper Plate	MANUAL TRANSAXLE ASSY(E351)
	(09953–03010)	Center Bolt	MANUAL TRANSAXLE ASSY(E351)
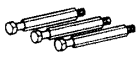	(09954–03010)	Arm	MANUAL TRANSAXLE ASSY(E351)

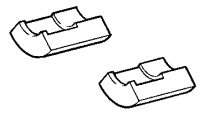	(09955–03011)	Claw No.1	MANUAL TRANSAXLE ASSY(E351)
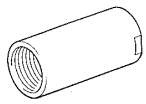	(09956–03030)	Adaptor 20	MANUAL TRANSAXLE ASSY(E351)
	(09957–04010)	Attachment	MANUAL TRANSAXLE ASSY(E351)
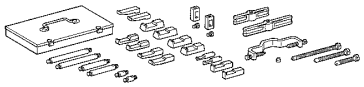	09950–40011	Puller B Set	MANUAL TRANSAXLE ASSY(E351)
	(09957–04010)	Attachment	MANUAL TRANSAXLE ASSY(E351)
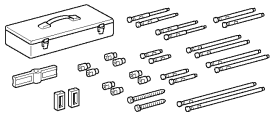	09950–50013	Puller C Set	MANUAL TRANSAXLE ASSY(E351)
	(09957–04010)	Attachment	MANUAL TRANSAXLE ASSY(E351)
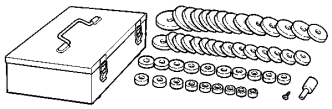	09950–60010	Replacer Set	MANUAL TRANSAXLE ASSY(E351) OUTPUT SHAFT ASSY(E351) SHIFT & SELECT LEVER SHAFT ASSY(E351)
	(09951–00180)	Replacer 18	MANUAL TRANSAXLE ASSY(E351)
	(09951–00210)	Replacer 21	SHIFT & SELECT LEVER SHAFT ASSY(E351)
	(09951–00280)	Replacer 28	MANUAL TRANSAXLE ASSY(E351) SHIFT & SELECT LEVER SHAFT ASSY(E351)
	(09951–00320)	Replacer 32	OUTPUT SHAFT ASSY(E351)
	(09951–00420)	Replacer 42	MANUAL TRANSAXLE ASSY(E351)

	(09951–00430) Replacer 43	OUTPUT SHAFT ASSY(E351)
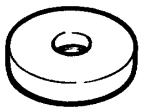	(09951–00490) Replacer 49	MANUAL TRANSAXLE ASSY(E351)
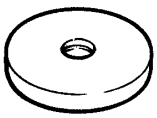	(09951–00560) Replacer 56	MANUAL TRANSAXLE ASSY(E351)
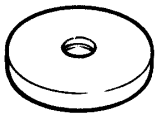	(09951–00570) Replacer 57	MANUAL TRANSAXLE ASSY(E351)
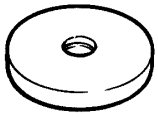	(09951–00600) Replacer 60	MANUAL TRANSAXLE ASSY(E351)
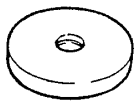	(09951–00680) Replacer 68	MANUAL TRANSAXLE ASSY(E351)
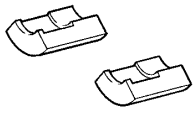	(09955–03011) Claw No.1	MANUAL TRANSAXLE ASSY(E351)
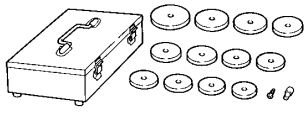	09950–60020 Replacer Set No.2	MANUAL TRANSAXLE ASSY(E351)
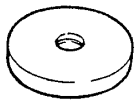	(09951–00680) Replacer 68	MANUAL TRANSAXLE ASSY(E351)
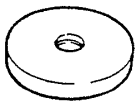	(09951–00730) Replacer 73	MANUAL TRANSAXLE ASSY(E351)
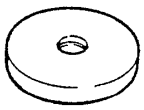	(09951–00790) Replacer 79	MANUAL TRANSAXLE ASSY(E351)
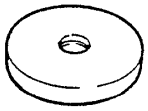	(09951–00890) Replacer 89	MANUAL TRANSAXLE ASSY(E351)
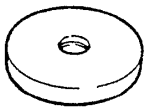	(09951–00910) Replacer 91	MANUAL TRANSAXLE ASSY(E351)

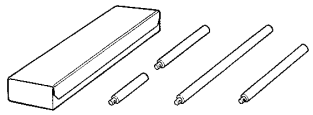	09950–70010	Handle Set	FRONT DIFFERENTIAL OIL SEAL MANUAL TRANSAXLE ASSY(E351) OUTPUT SHAFT ASSY(E351) SHIFT & SELECT LEVER SHAFT ASSY(E351)
	(09951–07100)	Handle 100	MANUAL TRANSAXLE ASSY(E351) OUTPUT SHAFT ASSY(E351) SHIFT & SELECT LEVER SHAFT ASSY(E351)
	(09951–07150)	Handle 150	MANUAL TRANSAXLE ASSY(E351) OUTPUT SHAFT ASSY(E351)
	(09951–07200)	Handle 200	FRONT DIFFERENTIAL OIL SEAL

Recomended Tools

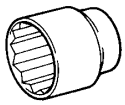	09011–12301	Socket Wrench 30 mm	MANUAL TRANSAXLE ASSY MANUAL TRANSAXLE ASSY(E351)
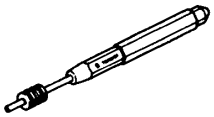	09031–00040	Pin Punch .	MANUAL TRANSAXLE ASSY(E351) SHIFT & SELECT LEVER SHAFT ASSY(E351) DIFFERENTIAL CASE ASSY(E351)
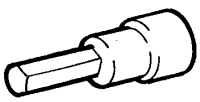	(09043–20060)	Socket Hexagon Wrench 6	MANUAL TRANSAXLE ASSY MANUAL TRANSAXLE ASSY(E351)
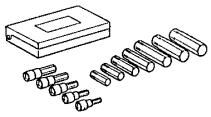	09040–00011	Hexagon Wrench Set	MANUAL TRANSAXLE ASSY MANUAL TRANSAXLE ASSY(E351)
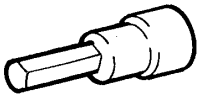	(09043–20060)	Socket Hexagon Wrench 6	MANUAL TRANSAXLE ASSY MANUAL TRANSAXLE ASSY(E351)
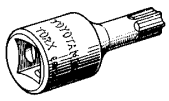	09042–00050	Torx Socket T45	MANUAL TRANSAXLE ASSY(E351)
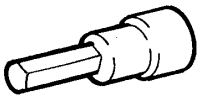	(09043–20060)	Socket Hexagon Wrench 6	MANUAL TRANSAXLE ASSY MANUAL TRANSAXLE ASSY(E351)
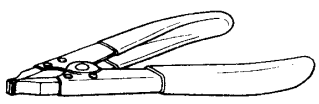	09905–00012	Snap Ring No.1 Expander	MANUAL TRANSAXLE ASSY(E351)
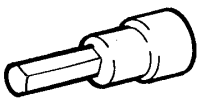	(09043–20060)	Socket Hexagon Wrench 6	MANUAL TRANSAXLE ASSY MANUAL TRANSAXLE ASSY(E351)

Equipment

Dial indicator with magnetic base	
Torque wrench	
Slide calipers	
V–block	
Micrometer	
Dial indicator	
Cylinder gauge	
Feeler gauge	
Precision straight edge	

Lubricant

Item	Capacity	Classification
Manual transaxle oil (w/ Differential oil)	2.5 liters (2.6 US qts, 2.2 Imp. qts)	API GL–4 or GL–5 SAE 75W–90

CLUTCH

PREPARATION

020TG–01

SST

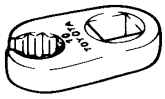	09023–00100	Union Nut Wrench 10 mm	CLUTCH MASTER CYLINDER ASSY CLUTCH RELEASE CYLINDER ASSY
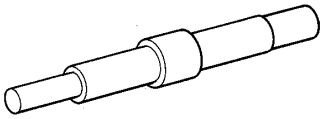	09301–00220	Clutch Guide Tool	CLUTCH UNIT
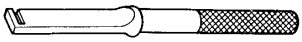	09333–00013	Universal Joint Bearing Remover & Replacer	CLUTCH UNIT

Recomended Tools

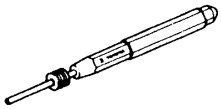	09031–00030	Pin Punch	CLUTCH MASTER CYLINDER ASSY
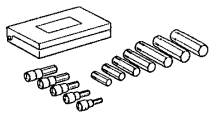	09040–00011	Hexagon Wrench Set	CLUTCH MASTER CYLINDER ASSY CLUTCH PEDAL SUB–ASSY
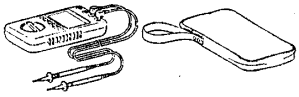	09082–00040	TOYOTA Electrical Tester	CLUTCH START SWITCH ASSY
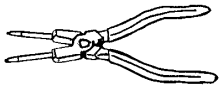	09905–00013	Snap Ring Pliers	CLUTCH MASTER CYLINDER ASSY

Equipment

Vernier calipers	
Dial indicator with magnetic base	
Torque wrench	

Lubricant

Item	Capacity	Classification
Brake fluid	–	SAE J1703 or FMVSS No. 116 DOT3

STEERING COLUMN

020TY–01

PREPARATION

SST

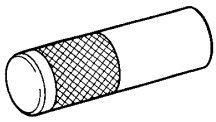	09608–06041	Front Hub Inner Bearing Cone Replacer	STEERING COLUMN ASSY(TMC MADE)
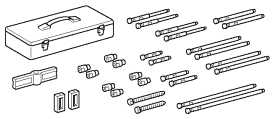	09950–50013	Puller C Set	STEERING COLUMN ASSY(TMC MADE) STEERING COLUMN ASSY(TMMK MADE)
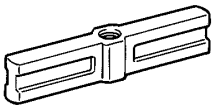	(09951–05010)	Hanger 150	STEERING COLUMN ASSY(TMC MADE) STEERING COLUMN ASSY(TMMK MADE)
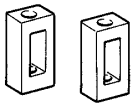	(09952–05010)	Slide Arm	STEERING COLUMN ASSY(TMC MADE) STEERING COLUMN ASSY(TMMK MADE)
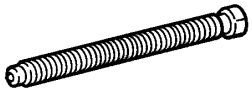	(09953–05020)	Center Bolt 150	STEERING COLUMN ASSY(TMC MADE) STEERING COLUMN ASSY(TMMK MADE)
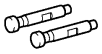	(09954–05021)	Claw No.2	STEERING COLUMN ASSY(TMC MADE) STEERING COLUMN ASSY(TMMK MADE)

Recomended Tools

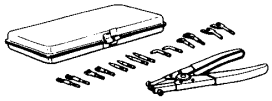	09904–00010	Expander Set	STEERING COLUMN ASSY(TMC MADE)
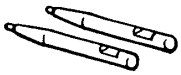	(09904–00050)	No. 4 Claw	STEERING COLUMN ASSY(TMC MADE)
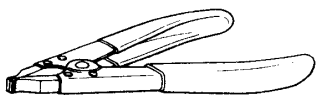	09905–00012	Snap Ring No.1 Expander	STEERING COLUMN ASSY(TMC MADE)

Equipment

Torque wrench	

POWER STEERING

020TH–01

PREPARATION

SST

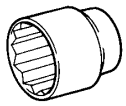	09011–12271	Socket Wrench for 27 mm	RACK & PINION POWER STEERING GEAR ASSY
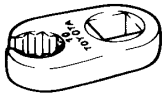	09023–12700	Union Nut Wrench 17mm	RACK & PINION POWER STEERING GEAR ASSY
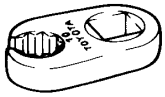	09023–38200	Union Nut Wrench 12mm	RACK & PINION POWER STEERING GEAR ASSY
	09249–63010	Torque Wrench Adaptor	VANE PUMP ASSY(2AZ–FE)
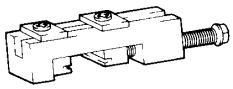	09521–24010	Rear Axle Shaft Puller	RACK & PINION POWER STEERING GEAR ASSY
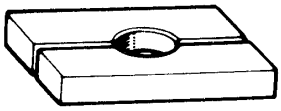	09527–21011	Rear Axle Shaft Bearing Remover	RACK & PINION POWER STEERING GEAR ASSY
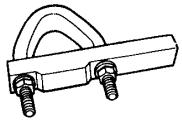	09612–00012	Rack & Pinion Steering Rack Housing Stand	RACK & PINION POWER STEERING GEAR ASSY
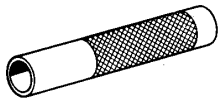	09612–22011	Tilt Handle Bearing Replacer	RACK & PINION POWER STEERING GEAR ASSY
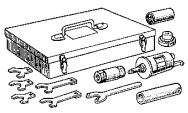	09612–24014	Steering Gear Housing Overhaul Tool Set	RACK & PINION POWER STEERING GEAR ASSY
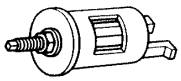	(09613–22011)	Steering Rack Shaft Bushing Puller	RACK & PINION POWER STEERING GEAR ASSY
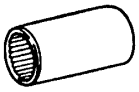	09616–00011	Steering Worm Bearing Adjusting Socket	RACK & PINION POWER STEERING GEAR ASSY
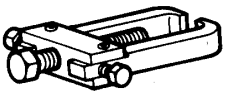	09628–62011	Boll Joint Puller	RACK & PINION POWER STEERING GEAR ASSY

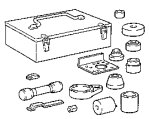	09630–00014	Power Steering Gear Housing Overhaul Tool Set	VANE PUMP ASSY(2AZ–FE)
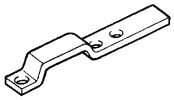	(09631–00132)	Vane Pump Bracket	VANE PUMP ASSY(2AZ–FE)
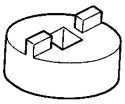	09631–10021	Rack Stopper Wrench	RACK & PINION POWER STEERING GEAR ASSY
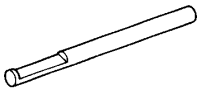	09631–10030	Oil Seal Remover	VANE PUMP ASSY(1MZ–FE) VANE PUMP ASSY(2AZ–FE)
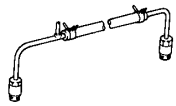	09631–12071	Steering Rack Oil Seal Test Tool	RACK & PINION POWER STEERING GEAR ASSY
	(09633–00010)	Packing	RACK & PINION POWER STEERING GEAR ASSY
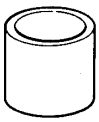	09631–20081	Seal Ring Tool	RACK & PINION POWER STEERING GEAR ASSY
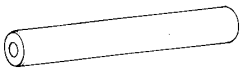	09631–33010	Steering Rack Cover ”I”	RACK & PINION POWER STEERING GEAR ASSY
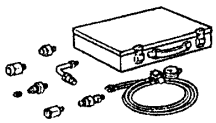	09640–10010	Power Steering Pressure Gauge Set	POWER STEERING SYSTEM
	(09641–01010)	Gauge Assy	POWER STEERING SYSTEM
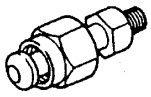	(09641–01020)	Attachment A	POWER STEERING SYSTEM
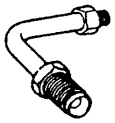	(09641–01030)	Attachment B	POWER STEERING SYSTEM
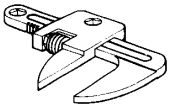	09922–10010	Variable Open Wrench	RACK & PINION POWER STEERING GEAR ASSY

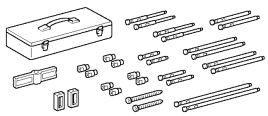	09950–50013	Puller C Set	RACK & PINION POWER STEERING GEAR ASSY
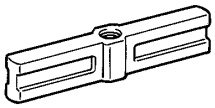	(09951–05010)	Hanger 150	RACK & PINION POWER STEERING GEAR ASSY
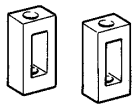	(09952–05010)	Slide Arm	RACK & PINION POWER STEERING GEAR ASSY
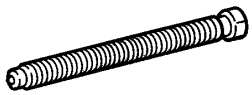	(09953–05020)	Center Bolt 150	RACK & PINION POWER STEERING GEAR ASSY
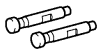	(09954–05021)	Claw No.2	RACK & PINION POWER STEERING GEAR ASSY
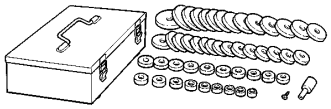	09950–60010	Replacer Set	RACK & PINION POWER STEERING GEAR ASSY VANE PUMP ASSY(1MZ–FE) VANE PUMP ASSY(2AZ–FE)
	(09951–00180)	Replacer 18	RACK & PINION POWER STEERING GEAR ASSY
	(09951–00250)	Replacer 25	RACK & PINION POWER STEERING GEAR ASSY
	(09951–00280)	Replacer 28	VANE PUMP ASSY(2AZ–FE)
	(09951–00290)	Replacer 29	RACK & PINION POWER STEERING GEAR ASSY
	(09951–00320)	Replacer 32	RACK & PINION POWER STEERING GEAR ASSY
	(09951–00330)	Replacer 33	VANE PUMP ASSY(1MZ–FE)
	(09951–00340)	Replacer 34	RACK & PINION POWER STEERING GEAR ASSY

	(09951–00400)	Replacer 40	RACK & PINION POWER STEERING GEAR ASSY
	(09951–00420)	Replacer 42	RACK & PINION POWER STEERING GEAR ASSY
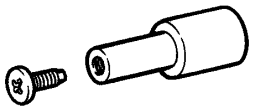	(09952–06010)	Adapter	RACK & PINION POWER STEERING GEAR ASSY
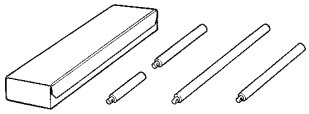	09950–70010	Handle Set	RACK & PINION POWER STEERING GEAR ASSY VANE PUMP ASSY(1MZ–FE) VANE PUMP ASSY(2AZ–FE)
	(09951–07100)	Handle 100	RACK & PINION POWER STEERING GEAR ASSY VANE PUMP ASSY(1MZ–FE) VANE PUMP ASSY(2AZ–FE)
	(09951–07150)	Handle 150	RACK & PINION POWER STEERING GEAR ASSY
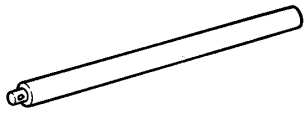	(09951–07360)	Handle 360	RACK & PINION POWER STEERING GEAR ASSY
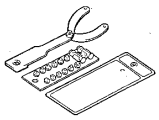	09960–10010	Variable Pin Wrench Set	VANE PUMP ASSY(1MZ–FE)
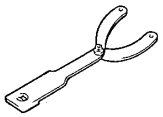	(09962–01000)	Variable Pin Wrench Arm Assy	VANE PUMP ASSY(1MZ–FE)
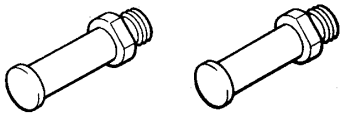	(09963–01000)	Pin 10	VANE PUMP ASSY(1MZ–FE)

Recomended Tools

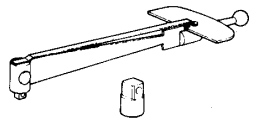	09025–00010	Torque Wrench (30 kgf–cm)	RACK & PINION POWER STEERING GEAR ASSY
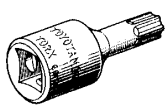	09042–00010	Torx Socket T30	RACK & PINION POWER STEERING GEAR ASSY
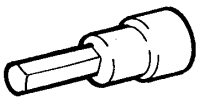	(09043–20060)	Socket Hexagon Wrench 6	RACK & PINION POWER STEERING GEAR ASSY

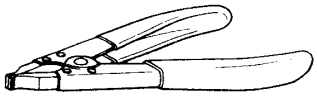	09905–00012	Snap Ring No.1 Expander	VANE PUMP ASSY(1MZ–FE) VANE PUMP ASSY(2AZ–FE)

Equipment

Caliper gauge	Vane pump assy
Belt tension gauge	Vane pump assy
Vernier calipers	Vane pump assy
Dial indicator	Steering gear assy
Feeler gauge	Vane pump assy
Micrometer	Vane pump assy
Torque wrench	

Lubricant

Item	Capacity	Classification
Power steering fluid (Total) 2AZ–FE 1MZ–FE	1.0 liters (1.1 US qts, 0.9 lmp.qts)	ATF DEXRON® II or III

SSM

	08833–00080	Adhesive 1344 THREE BOND 1344 LOCTITE 242 or equivalent	RACK & PINION POWER STEERING GEAR ASSY

HEATER & AIR CONDITIONER

020UA–01

PREPARATION

SST

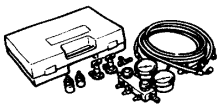	07110–58060	Air Conditioner Service Tool Set	REFRIGERANT AIR CONDITIONING RADIATOR ASSY COOLER CONDENSER ASSY COOLER COMPRESSOR ASSY(1MZ–FE) COOLER COMPRESSOR ASSY(2AZ–FE)
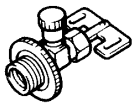	(07117–58060)	Refrigerant Drain Service Valve	REFRIGERANT AIR CONDITIONING RADIATOR ASSY COOLER CONDENSER ASSY COOLER COMPRESSOR ASSY(1MZ–FE) COOLER COMPRESSOR ASSY(2AZ–FE)
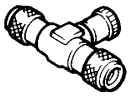	(07117–58070)	T–Joint	REFRIGERANT AIR CONDITIONING RADIATOR ASSY COOLER CONDENSER ASSY COOLER COMPRESSOR ASSY(1MZ–FE) COOLER COMPRESSOR ASSY(2AZ–FE)
	(07117–58080)	Quick Disconnect Adapter	REFRIGERANT AIR CONDITIONING RADIATOR ASSY COOLER CONDENSER ASSY COOLER COMPRESSOR ASSY(1MZ–FE) COOLER COMPRESSOR ASSY(2AZ–FE)
	(07117–58090)	Quick Disconnect Adapter	REFRIGERANT AIR CONDITIONING RADIATOR ASSY COOLER CONDENSER ASSY COOLER COMPRESSOR ASSY(1MZ–FE) COOLER COMPRESSOR ASSY(2AZ–FE)
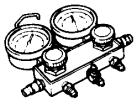	(07117–78050)	Refrigerant Charging Gauge	REFRIGERANT AIR CONDITIONING RADIATOR ASSY COOLER CONDENSER ASSY COOLER COMPRESSOR ASSY(1MZ–FE) COOLER COMPRESSOR ASSY(2AZ–FE)

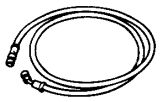	(07117–88060)	Refrigerant Charging Hose	REFRIGERANT AIR CONDITIONING RADIATOR ASSY COOLER CONDENSER ASSY COOLER COMPRESSOR ASSY(1MZ–FE) COOLER COMPRESSOR ASSY(2AZ–FE)
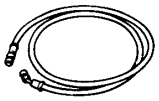	(07117–88070)	Refrigerant Charging Hose	REFRIGERANT AIR CONDITIONING RADIATOR ASSY COOLER CONDENSER ASSY COOLER COMPRESSOR ASSY(1MZ–FE) COOLER COMPRESSOR ASSY(2AZ–FE)
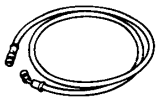	(07117–88080)	Refrigerant Charging Hose	REFRIGERANT AIR CONDITIONING RADIATOR ASSY COOLER CONDENSER ASSY COOLER COMPRESSOR ASSY(1MZ–FE) COOLER COMPRESSOR ASSY(2AZ–FE)
	09249–63010	Torque Wrench Adaptor	COOLER COMPRESSOR ASSY(2AZ–FE)
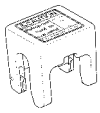	09870–00015	A/C Quick Joint Puller No.1	AIR CONDITIONING RADIATOR ASSY
	09870–00025	A/C Quick Joint Puller No.2	AIR CONDITIONING RADIATOR ASSY
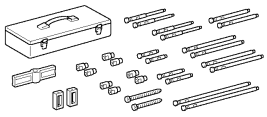	09950–50013	Puller C Set	AIR CONDITIONING RADIATOR ASSY BLOWER ASSY
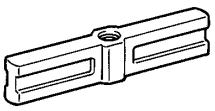	(09951–05010)	Hanger 150	AIR CONDITIONING RADIATOR ASSY BLOWER ASSY
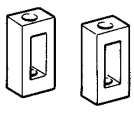	(09952–05010)	Slide Arm	AIR CONDITIONING RADIATOR ASSY BLOWER ASSY
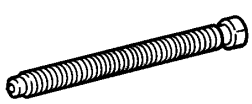	(09953–05020)	Center Bolt 150	AIR CONDITIONING RADIATOR ASSY BLOWER ASSY
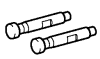	(09954–05021)	Claw No.2	AIR CONDITIONING RADIATOR ASSY BLOWER ASSY

Recomended Tools

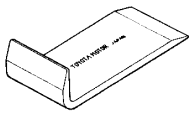	09070–20010	Moulding Remover	AIR CONDITIONING RADIATOR ASSY BLOWER ASSY
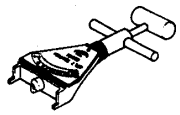	09216–00021	Belt Tension Gauge	V (COOLER COMPRESSOR TO CRANKSHAFT PULLEY) BELT NO.1
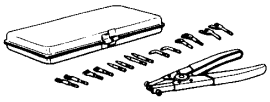	09904–00010	Expander Set	COOLER COMPRESSOR ASSY(1MZ–FE) COOLER COMPRESSOR ASSY(2AZ–FE)
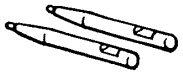	(09904–00050)	No. 4 Claw	COOLER COMPRESSOR ASSY(1MZ–FE) COOLER COMPRESSOR ASSY(2AZ–FE)
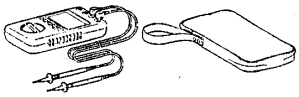	09082–00040	TOYOTA Electrical Tester	

Equipment

Voltmeter	
Anmeter	
Ohmmeter	
Vinyl tape	
Hexagon wrench (10 mm)	
Hexagon wrench (4 mm)	
Torque socket wrench (E 8)	
Vise pliers	
Gas leak detector	
Belt tension gauge	
Dial indicator	
Torque wrench	

Lubricant

Item	Capacity	Classification
Compressor oil	–	ND–OIL 8 or equivalent

SUPPLEMENTAL RESTRAINT SYSTEM

020UG–01

PREPARATION

SST

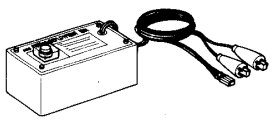	09082–00700	SRS Airbag Deployment Tool	HORN BUTTON ASSY INSTR PNL PASS L/DOOR AIR BAG ASSY CURTAIN SHIELD AIR BAG ASSY LH FRONT SEAT AIRBAG ASSY RH
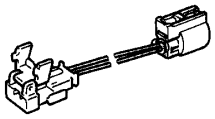	09082–00750	Airbag Deployment Wire Sub–harness No.3	FRONT SEAT AIRBAG ASSY RH
	09082–00780	Airbag Deployment Wire Sub–harness No.6	HORN BUTTON ASSY
	09082–00801	Airbag Deployment Wire Sub–Harness No. 8	HORN BUTTON ASSY INSTR PNL PASS L/DOOR AIR BAG ASSY CURTAIN SHIELD AIR BAG ASSY LH
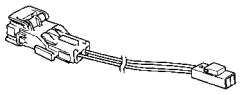	(09082–10801)	Wire A	HORN BUTTON ASSY INSTR PNL PASS L/DOOR AIR BAG ASSY CURTAIN SHIELD AIR BAG ASSY LH
	(09082–20801)	Wire B	CURTAIN SHIELD AIR BAG ASSY LH
	(09082–30801)	Wire C	HORN BUTTON ASSY INSTR PNL PASS L/DOOR AIR BAG ASSY
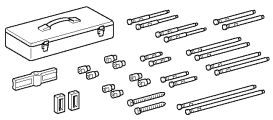	09950–50013	Puller C Set	SPIRAL CABLE SUB–ASSY
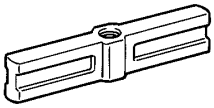	(09951–05010)	Hanger 150	SPIRAL CABLE SUB–ASSY INSTR PNL PASS L/DOOR AIR BAG ASSY
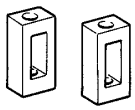	(09952–05010)	Slide Arm	SPIRAL CABLE SUB–ASSY INSTR PNL PASS L/DOOR AIR BAG ASSY
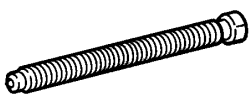	(09953–05020)	Center Bolt 150	SPIRAL CABLE SUB–ASSY INSTR PNL PASS L/DOOR AIR BAG ASSY
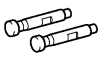	(09954–05021)	Claw No.2	SPIRAL CABLE SUB–ASSY

Recomended Tools

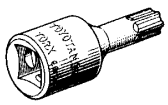	09042–00010 Torx Socket T30	HORN BUTTON ASSY SPIRAL CABLE SUB–ASSY INSTR PNL PASS L/DOOR AIR BAG ASSY

Equipment

Torque wrench	
Bolt Length: 35.0 mm (1.387 in.) Pitch: 1.0 mm (0.039 in.) Diam.: 6.0 mm (0.236 in.)	Airbag disposal
Tire Width: 185 mm (7.28 in.) Inner diam.: 360 mm (14.17 in.)	Airbag disposal
Tire with disc wheel Width: 185 mm (7.28 in.) Inner diam.: 360 mm (14.17 in.)	Airbag disposal
Vinyl bag	Airbag disposal

SEAT BELT

020V6–01

PREPARATION

SST

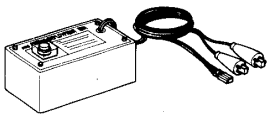	09082–00700	SRS Airbag Deployment Tool	FRONT SEAT BELT
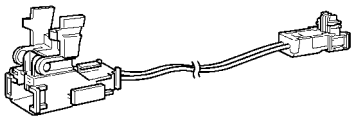	09082–00770	Airbag Deployment Wire Sub–harness No.5	FRONT SEAT BELT

Equipment

Torque wrench	

LIGHTING

020UL–01

PREPARATION

Recomended Tools

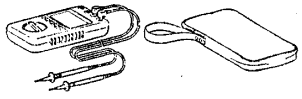	09082–00040	TOYOTA Electrical Tester	LIGHTING SYSTEM
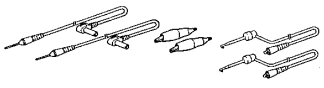	(09083–00150)	Test Lead Set	LIGHTING SYSTEM

Equipment

Torque wrench	
Voltmeter	

WIPER & WASHER

020UM–01

PREPARATION

SST

	09843–18040	Diagnosis Check Wire No.2	WIPER AND WASHER SYSTEM

Recomended Tools

	09082–00040	TOYOTA Electrical Tester	WIPER AND WASHER SYSTEM
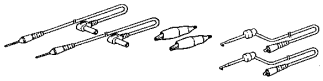	(09083–00150)	Test Lead Set	WIPER AND WASHER SYSTEM

AUDIO & VISUAL SYSTEM

020TI–01

PREPARATION

Recomended Tools

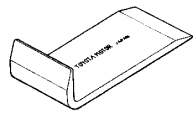	09070–20010 Moulding Remover	REAR SPEAKER ASSY ANTENNA CORD SUB–ASSY NAVIGATION ANTENNA ASSY POWER POINT SOCKET ASSY POWER POINT SOCKET ASSY RR CIGARETTE LIGHTER ASSY

Equipment

Torque wrench	

COMMUNICATION SYSTEM

020UC–01

PREPARATION

Recomended Tools

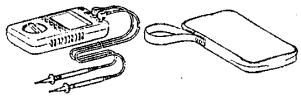	09082–00040	TOYOTA Electrical Tester	HORN SYSTEM

WINDSHIELD/WINDOWGLASS/MIRROR

020U8–01

PREPARATION

Recomended Tools

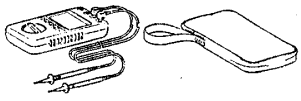	09082–00040	TOYOTA Electrical Tester	POWER WINDOW CONTROL SYSTEM WINDOW DEFOGGER SYSTEM POWER MIRROR CONTROL SYSTEM
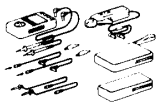	09082–00050	TOYOTA Electrical Tester Set	POWER WINDOW CONTROL SYSTEM WINDOW DEFOGGER SYSTEM POWER MIRROR CONTROL SYSTEM
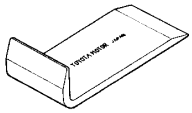	09070–20010	Moulding Remover	OUTER REAR VIEW MIRROR SUB–ASSY LH

Equipment

Adhesive	
Hand riveter	
Torque wrench	
Knife	
Sealer gun	
Tape	To avoid surface damage.
Piano wire	Windshield
Plastic sheet	To avoid surface damage.
Wooden block or similar object	For tying both piano wire ends

SSM

	08833–00030	Three cement black or equivalent	WINDSHIELD GLASS BACK WINDOW GLASS
	08850–00801	Windshield Glass Adhesive Set or equivalent	WINDSHIELD GLASS BACK WINDOW GLASS

INSTRUMENT PANEL/METER

020U6–01

PREPARATION

SST

	09843–18020	Diagnosis Check Wire	
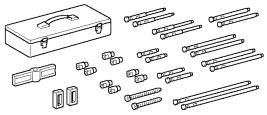	09950–50013	Puller C Set	INSTRUMENT PANEL SAFETY PAD SUB–ASSY
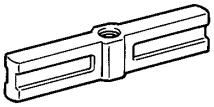	(09951–05010)	Hanger 150	INSTRUMENT PANEL SAFETY PAD SUB–ASSY
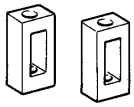	(09952–05010)	Slide Arm	INSTRUMENT PANEL SAFETY PAD SUB–ASSY
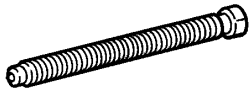	(09953–05020)	Center Bolt 150	INSTRUMENT PANEL SAFETY PAD SUB–ASSY
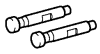	(09954–05021)	Claw No.2	INSTRUMENT PANEL SAFETY PAD SUB–ASSY

Recomended Tools

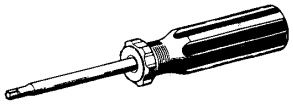	09041–00030	Torx Driver T30	INSTRUMENT PANEL SAFETY PAD SUB–ASSY
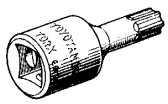	09042–00010	Torx Socket T30	INSTRUMENT PANEL SAFETY PAD SUB–ASSY
	09070–20010	Moulding Remover	INSTRUMENT PANEL SAFETY PAD SUB–ASSY

Equipment

Voltmeter	
Ohmmeter	
Torque wrench	
Adhesive Tape	

SEAT

020V8–01

PREPARATION

Equipment

Hog ring pliers	
Hog ring	
Torque wrench	
Tape	To avoid surface damage
Ohmmeter	

SLIDING ROOF/CONVERTIBLE

020UD–01

PREPARATION

Recomended Tools

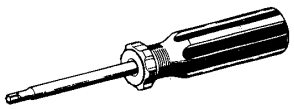	09041–00020	Torx Driver T25	SLIDING ROOF (TMMK Made) SLIDING ROOF (TMC Made)
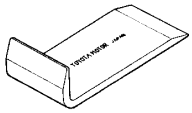	09070–20010	Moulding Remover	SLIDING ROOF (TMC Made)

Equipment

Torque wrench	

ENGINE HOOD/DOOR

020UB–01

PREPARATION

SST

	09812–00010	Door Hinge Set Bolt Wrench	FRONT DOOR REAR DOOR

Recomended Tools

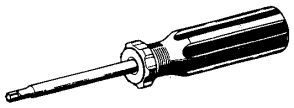	09041–00020	Torx Driver T25	FRONT DOOR REAR DOOR
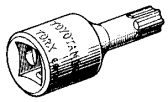	09042–00010	Torx Socket T30	FRONT DOOR REAR DOOR
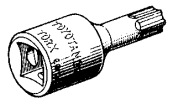	09042–00020	Torx Socket T40	REAR DOOR
	09070–20010	Moulding Remover	FRONT DOOR REAR DOOR

Equipment

Clip remover	
Tape	To avoid surface damage
Torque wrench	

EXTERIOR/INTERIOR TRIM

020UE–01

PREPARATION

Recomended Tools

	09070–20010 Moulding Remover	FRONT DOOR BELT MOULDING ASSY LH REAR DOOR BELT MOULDING ASSY LH ROOF HEADLINING ASSY ROOF DRIP SIDE FINISH MOULDING CENTER LH

Equipment

Adhesive tape	To avoid surface damage.
Torque wrench	
Clip remover	
Cleaner	
Heat light	Moulding
Piano wire	Moulding
Tape	To avoid surface damage.
Wooden block or similar object	For tying both piano wire ends

VEHICLE CONTROL SYSTEM

020UH–01

PREPARATION

Recomended Tools

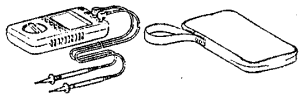	09082–00040	TOYOTA Electrical Tester	IGNITION OR STARTER SWITCH ASSY
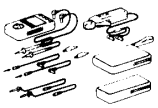	09082–00050	TOYOTA Electrical Tester Set	IGNITION OR STARTER SWITCH ASSY

CRUISE CONTROL

020U7–01

PREPARATION

SST

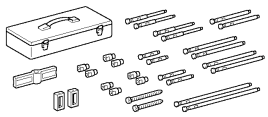	09950–50013	Puller C Set	CRUISE CONTROL MAIN SWITCH ASSY
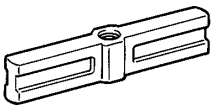	(09951–05010)	Hanger 150	CRUISE CONTROL MAIN SWITCH ASSY
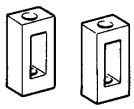	(09952–05010)	Slide Arm	CRUISE CONTROL MAIN SWITCH ASSY
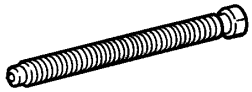	(09953–05020)	Center Bolt 150	CRUISE CONTROL MAIN SWITCH ASSY
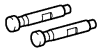	(09954–05021)	Claw No.2	CRUISE CONTROL MAIN SWITCH ASSY

Recomended Tools

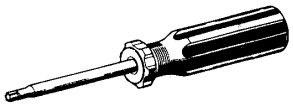	09041–00030	Torx Driver T30	INSTRUMENT PANEL SAFETY PAD SUB–ASSY
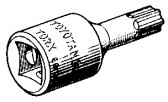	09042–00010	Torx Socket T30	INSTRUMENT PANEL SAFETY PAD SUB–ASSY

Equipment

Torque wrench	
Adhesive Tape	

STANDARD BOLT

HOW TO DETERMINE BOLT STRENGTH

0307K–02

Bolt Type				Class
Hexagon Head Bolt		Stud Bolt	Weld Bolt	
Normal Recess Bolt	Deep Recess Bolt			
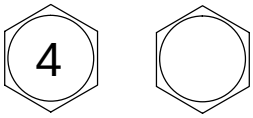 No Mark	 No Mark	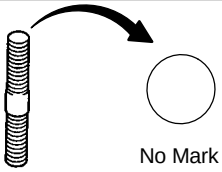 No Mark	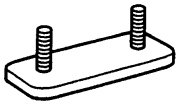	4T
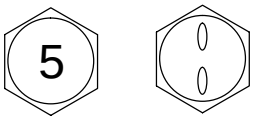	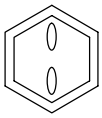			5T
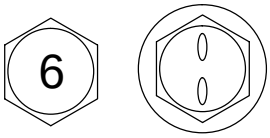 w/ Washer	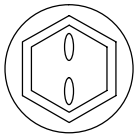 w/ Washer			6T
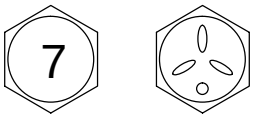	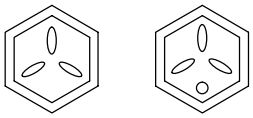			7T
				8T
				9T
	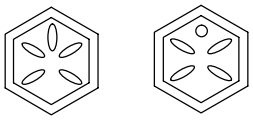			10T
	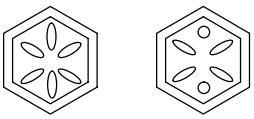			11T

B06431

0307L–02

SPECIFIED TORQUE FOR STANDARD BOLTS

Class	Diameter mm	Pitch mm	Specified torque					
			Hexagon head bolt			Hexagon flange bolt		
			N·m	kgf·cm	ft·lbf	N·m	kgf·cm	ft·lbf
4T	6	1	5	55	48 in.·lbf	6	60	52 in.·lbf
	8	1.25	12.5	130	9	14	145	10
	10	1.25	26	260	19	29	290	21
	12	1.25	47	480	35	53	540	39
	14	1.5	74	760	55	84	850	61
	16	1.5	115	1,150	83	–	–	–
5T	6	1	6.5	65	56 in.·lbf	7.5	75	65 in.·lbf
	8	1.25	15.5	160	12	17.5	175	13
	10	1.25	32	330	24	36	360	26
	12	1.25	59	600	43	65	670	48
	14	1.5	91	930	67	100	1,050	76
	16	1.5	140	1,400	101	–	–	–
6T	6	1	8	80	69 in.·lbf	9	90	78 in.·lbf
	8	1.25	19	195	14	21	210	15
	10	1.25	39	400	29	44	440	32
	12	1.25	71	730	53	80	810	59
	14	1.5	110	1,100	80	125	1,250	90
	16	1.5	170	1,750	127	–	–	–
7T	6	1	10.5	110	8	12	120	9
	8	1.25	25	260	19	28	290	21
	10	1.25	52	530	38	58	590	43
	12	1.25	95	970	70	105	1,050	76
	14	1.5	145	1,500	108	165	1,700	123
	16	1.5	230	2,300	166	–	–	–
8T	8	1.25	29	300	22	33	330	24
	10	1.25	61	620	45	68	690	50
	12	1.25	110	1,100	80	120	1,250	90
9T	8	1.25	34	340	25	37	380	27
	10	1.25	70	710	51	78	790	57
	12	1.25	125	1,300	94	140	1,450	105
10T	8	1.25	38	390	28	42	430	31
	10	1.25	78	800	58	88	890	64
	12	1.25	140	1,450	105	155	1,600	116
11T	8	1.25	42	430	31	47	480	35
	10	1.25	87	890	64	97	990	72
	12	1.25	155	1,600	116	175	1,800	130

0307M–02

HOW TO DETERMINE NUT STRENGTH

Nut Type			Class
Present Standard Hexagon Nut	Old Standard Hexagon Nut		
	Cold Forging Nut	Cutting Processed Nut	
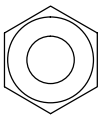 No Mark			4N
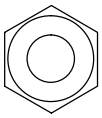 No Mark (w/ Washer)	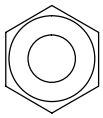 No Mark (w/ Washer)	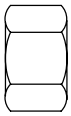 No Mark	5N (4T)
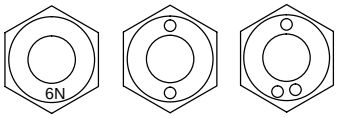 6N			6N
	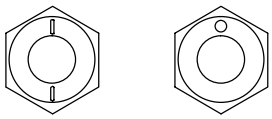	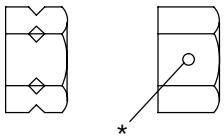 *	7N (5T)
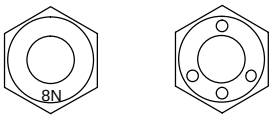 8N			8N
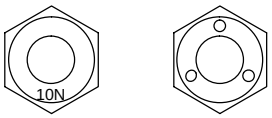 10N	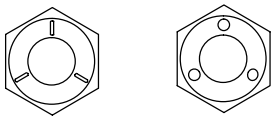	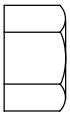 No Mark	10N (7T)
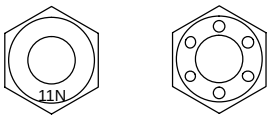 11N			11N
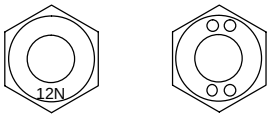 12N			12N

*: Nut with 1 or more marks on one side surface of the nut.

B06432

HINT:

Use the nut with the same number of the nut strength classification or the greater than the bolt strength classification number when tightening parts with a bolt and nut.

Example: Bolt = 4T

Nut = 4N or more

ENGINE CONTROL SYSTEM

030EL–01

SERVICE DATA

2AZ–FE

Throttle body		
Standard throttle valve opening percentage		60 % or more
Accelerator pedal position sensor		
Standard voltage		0.6 – 1.0 V
Camshaft timing oil control valve assy		
Standard	VVT system is OFF (OCV is OFF)	Normal engine speed
	VVT system is ON (OCV is ON)	Rough idle or engine stalled
Intake air flow meter sub–assy		
Resistance	at –20°C(–4°F)	13.6 – 18.4 kΩ
	at 20°C(68°F)	2.21 – 2.69 kΩ
	at 60°C(140°F)	0.493 – 0.667 kΩ
Camshaft timing oil control valve assy		
Resistance	at 20 °C (68 °F)	6.9 – 7.9 Ω
Accelerator pedal assy		
Resistance	2 (VPA2) – 3 (EP1)	5.0 kΩ or less
	5 (VPA1) – 1 (EP2)	5.0 kΩ or less
	6 (VCP1) – 3 (EP1)	2.25 – 4.75 kΩ
	4 (VCP2) – 1 (EP2)	2.25 – 4.75 kΩ
Throttle body assy		
	3 (VC) – 6 (GND)	1.2 – 3.2 kΩ at 20 °C (68 °F)
	2 (M+) – 1 (M–)	0.3 – 100 kΩ at 20 °C (68 °F)
E.F.I. Engine coolant temperature sensor		
Resistance	Approx. 20°C (68°F)	2.29 – 2.6 kΩ
	Approx. 80°C (176°F)	0.300 – 0.327 kΩ
E.F.I. Circuit opening relay assy		
Specified condition	1 – 2	Continuity
	3 – 5	No continuity

1MZ–FE

Throttle body		
Standard throttle valve opening percentage		60 % or more
Accelerator pedal position sensor		
Standard voltage		0.6 – 1.0 V
Intake air flow meter assy		
Resistance	at –20°C(–4°F)	13.6 – 18.4 kΩ
	at 20°C(68°F)	2.21 – 2.69 kΩ
	at 60°C(140°F)	0.493 – 0.667 kΩ
Accelerator pedal assy		
Resistance	2 (VPA2) – 3 (EP1)	5.0 kΩ or less
	5 (VPA1) – 1 (EP2)	5.0 kΩ or less
	6 (VCP1) – 3 (EP1)	2.25 – 4.75 kΩ
	4 (VCP2) – 1 (EP2)	2.25 – 4.75 kΩ
Throttle body assy		
	M+ – M–	0.3 – 100 kΩ at 20 °C (68 °F)
Throttle position sensor		
Resistance	VC – E2	1.2 – 3.2 kΩ
Coolant temperature sensor		
Resistance	Approx. 20°C (68°F)	2.32 – 2.59 kΩ
	Approx. 80°C (176°F)	0.310 – 0.326 kΩ

030EM–01

TORQUE SPECIFICATION

2AZ–FE

Part Tightened	N·m	kgf·cm	ft·lbf
Throttle body assy x Intake manifold	30	305	22

1MZ–FE

Part Tightened	N·m	kgf·cm	ft·lbf
Throttle position sensor x Throttle body	2.0	20	17 in.·lbf
Throttle body assy x Intake air surge tank	20	199	14

FUEL

030EN–01

SERVICE DATA

2AZ–FE

Fuel pressure		304 – 343 kPa (3.1 – 3.5 kgf/cm2, 44 – 50 psi)
Fuel pressure		147 kPa (1.5 kgf/cm2, 21 psi) or more
Fuel injector		
Resistance	at 20°C (68°F)	13.4 – 14.2Ω
Injection volume		68 – 82 cm^2 (4.1 – 4.9 cu in.) per 15 seconds
Difference between each cylinder		14 cm^3 (0.9 cu in.) or less
Fuel leakage		1 drop or less per 12 minutes
Fuel pump		
Resistance	at 20°C (68°F)	0.2 – 3.0 Ω

1MZ–FE

Fuel pressure		304 – 343 kPa (3.1 – 3.5 kgf/cm2, 44 – 50 psi)
Fuel pressure		147 kPa (1.5 kgf/cm2, 21 psi) or more
Fuel injector		
Resistance	at 20°C (68°F)	13.4 – 14.2Ω
Injection volume		60 – 73 cm^2 (3.7 – 4.5 cu in.) per 15 seconds
Difference between each cylinder		13 cm^3 (0.8 cu in.) or less
Fuel leakage		1 drop or less per 12 minutes
Fuel pump		
Resistance	at 20°C (68°F)	0.2 – 3.0 Ω

030EO–01

TORQUE SPECIFICATION

2AZ–FE

Part Tightened	N·m	kgf·cm	ft·lbf
Delivery pipe x Cylinder head	20	204	15
Fuel tank vent tube set plate x Fuel tank	3.5	36	31
Fuel main tube support x Fuel tank assy	5.4	55	48 in.·lbf
Fuel tank assy x Boby	39	400	29
Fuel tank protector lower center x Fuel tank assy	5.4	55	48 in.·lbf
Parking brake cable assy No. 3 x Body	5.4	55	48 in.·lbf
Parking brake cable assy No. 2 x Body	5.4	55	48 in.·lbf

1MZ–FE

Part Tightened	N·m	kgf·cm	ft·lbf
Delivery pipe x Cylinder head	10	102	7
Pulsation damper x Delivery pipe	33	336	24
Fuel pipe x Delivery pipe	33	336	24
Fuel pipe x Intake manifold	20	204	15
Front suspension brace sub–assy upper center x Body	80	816	59
Fuel tank vent tube set plate x Fuel tank	3.5	36	31 in.·lbf
Fuel main tube support x Fuel tank	5.4	55	48 in.·lbf
Fuel tank x Body	39	400	29
Fuel tank protector lower center x Fuel tank	5.4	55	48 in.·lbf
Parking brake cable assy No.2 x Body	5.4	55	48 in.·lbf
Parking brake cable assy No.3 x Body	5.4	55	48 in.·lbf

EMISSION CONTROL

030EP–01

SERVICE DATA

2AZ–FE

VSV for Pressure switching valve		
Resistance	at 20°C (68°F)	30 – 36 Ω
Vacuum switching valve assy No. 1		
Resistance	at 20°C (68°F)	30 – 34 Ω
VSV for Canister closed valve		
Resistance	at 20°C (68°F)	24 – 30 Ω
Oxygen sensor		
Resistance	1 (HT) – 2 (+B)	11 – 16 Ω at 20°C (68°F)
Resistance	1 (HT) – 4 (E1)	No continuity
Air fuel ratio sensor		
Resistance	1 (HT) – 2 (+B)	1.8 – 3.4 Ω at 20°C (68°F)
	1 (HT) – 2 (+B)	5.0 – 7.5 Ω at 500°C (932°F)
	1 (HT) – 4 (E1)	No continuity

1MZ–FE

VSV for pressure switching valve		
Resistance	at 20 °C (68 °F)	37 – 44 Ω
	at 120 °C (248 °F)	51 – 62 Ω
VSV for EVAP		
Resistance	at 20 °C (68 °F)	27 – 33 Ω
VSV for canister closed valve		
Resistance	at 20 °C (68 °F)	25 – 30 Ω
Oxygen sensor		
Resistance	at 20 °C (68 °F)	11 – 16 Ω
A/F sensor		
Resistance	at 20 °C (68 °F)	0.8 – 1.4 Ω
	at 800 °C (1,472 °F)	1.8 – 3.2 Ω
EGR valve position sensor		
Resisrance	VC – E2	1.5 – 4.3 kΩ
Power source voltage	VC – E2	4.5 – 5.5 V
Power output voltage	EGLS – E2	
	at vacuum (17.3 kPa, 130 mmHg, 5.1 in.Hg)	3.2 – 5.1 V
	at no vacuum	0.4 – 1.6 V
EGR gas temperature sensor		
Resistance	at 20 °C (68 °F)	69.4 – 88.5 Ω
	at 100 °C (212 °F)	11.89 – 14.37 Ω
	at 150 °C (302 °F)	2.79 – 3.59 Ω
Vacuum switching valve No.1		
Resistance	at 20 °C (68 °F)	27 – 33 Ω

030EQ–01

TORQUE SPECIFICATION

1MZ–FE

Part Tightened	N·m	kgf·cm	ft·lbf
EGR gas temperature sensor x EGR valve	20	200	14
EGR valve x Intake air surge tank	12	120	9
EGR pipe No.2 x EGR valve	12	120	9
EGR pipe No.2 x EGR cooler	12	120	9

INTAKE

030ER–01

SERVICE DATA

1MZ–FE

Intake air control valve No.3 (VSV) Resistance	at 20°C (68°F)	37 – 44 Ω
Vacuum switching valve assy No.1 Resistance	at 20°C (68°F)	33 – 39 Ω

030ES–01

TORQUE SPECIFICATION

1MZ–FE

Part Tightened	N·m	kgf·cm	ft·lbf
Intake air control valve assy x Intake air surge tank	15	153	11

ENGINE MECHANICAL

030ET–01

SERVICE DATA

2AZ–FE

Battery specific gravity	at 20°C (68°F)	1.25–1.29
Ignition timing	w/ Terminals TC and CG of DLC3 connected	8 – 12° BTDC
	w/ Terminals TC and CG of DLC3 disconnected	5 – 15° BTDC
Idle speed	A/T	610 – 710 r/min.
	M/T	650 – 750 r/min.
Compression		
	Compression pressure	1.360 MPa (13.9 kgf/cm^2, 198 psi)
	Minimum pressure	0.98 MPa (10 kgf/cm^2, 142 psi)
	Difference between each cylinder	100 kPa (1.0 kgf/cm^2, 14 psi)
Balance shaft		
Thrust clearance	Standard	0.050 – 0.090 mm (0.0020 – 0.0035 in.)
	Maximum	0.090 mm (0.0035 in.)
Oil clearance	Standard	0.004 – 0.031 mm (0.0002 – 0.0012 in.)
	Maximum	0.031 mm (0.0012 in.)
Housing journal bore diameter	Mark 1	26.000 – 26.006 mm (1.0236 –1.0239 in.)
	Mark 2	26.007 – 26.012 mm (1.0239 –1.0241 in.)
	Mark 3	26.013 – 26.018 mm (1.0241 –1.0243 in.)
Journal diameter		22.985 – 23.000 mm (0.9049 – 0.9055 in.)
Bearing center wall thickness	Mark 1	1.486 – 1.489 mm (0.0585 – 0.0586 in)
	Mark 2	1.489 – 1.492 mm (0.0586 – 0.0587 in)
	Mark 3	1.492 – 1.495 mm (0.0587 – 0.0589 in)
Oil pump drive gear		
Gear diameter (w/chain)	Minimum	48.2 mm (1.898 in.)
Oil pump drive shaft gear		
Gear diameter (w/chain)	Minimum	48.2 mm (1.898 in.)
Crankshaft timing gear or sprocket		
Gear diameter (w/chain)	Minimum	51.6 mm (2.031 in.)
Chain tensioner slipper		
Wear	Maximum	1.0 mm (0.039 in.)
Chain vibration damper No.1		
Wear	Maximum	1.0 mm (0.039 in.)
Cylinder head set bolt		
Bolt length	Standard	161.3 – 162.7 mm (6.350 – 6.406 in.)
	Maximum	164.2 mm (6.465 in.)
Chain sub–assy		
Elongation	Maximum	115.4 mm (4.543 in.)
Camshaft timing gear or sprocket		
Sprocket diameter (w/chain)	Minimum	97.3 mm (3.831 in.)

Camshaft		
Circle runout	Maximum	0.03 mm (0.0012 in.)
Cam lobe height	Standard	46.495 – 46.595 mm (1.8305 – 1.8345 in.)
	Minimum	46.385 mm (1.8262 in.)
Camshaft No.2		
Circle runout	Maximum	0.03 mm (0.0012 in.)
Cam lobe height	Standard	45.983 – 46.083 mm (1.8104 – 1.8143 in.)
	Minimum	45.873 mm (1.8060 in.)
No. 1 journal diameter		35.971 – 35.985 mm (1.4165 – 1.4167 in.)
Other journal diameter		22.959 – 22.975 mm (0.9039 – 0.9045 in.)
Thrust clearance		
Intake	Standard	0.040 – 0.095 mm (0.0016 – 0.0037 in.)
	Maximum	0.11 mm (0.0043 in.)
Exhaust	Standard	0.080 – 0.135 mm (0.0032 – 0.0053 in.)
	Maximum	0.15 mm (0.0059 in.)
Oil clearance		
Intake No. 1 journal bearing mark 1	Standard	0.007 – 0.038 mm (0.0028 – 0.00150 in.)
Intake No. 1 journal bearing mark 2	Standard	0.008 – 0.038 mm (0.0031 – 0.00150 in.)
Intake No. 1 journal bearing mark 3	Standard	0.008 – 0.038 mm (0.0031 – 0.00150 in.)
Exhaust No. 1 journal	Standard	0.040 – 0.079 mm (0.00157 – 0.00311 in.)
Other journals	Standard	0.025 – 0.062 mm (0.00098 – 0.00244 in.)
Intake No. 1 journal	Maximum	0.07 mm (0.0028 in.)
Other journals	Maximum	0.10 mm (0.0039 in.)
Valve clearance		
Intake	(cold)	0.19 – 0.29 mm (0.0075 – 0.0114 in.)
Exhaust		0.30 – 0.40 mm (0.0118 – 0.0157 in.)
Cylinder head		
Warpage	Maximum	
Cylinder block side		0.05 mm (0.0020 in.)
Intake manifold side		0.08 mm (0.0031 in.)
Exhaust manifold side		0.08 mm (0.0031 in.)
Inner compression spring		
Free length		45.7 mm (1.799 in.)
Deviation	Maximum	1.6 mm (0.063 in.)
Angle (reference)	Maximum	2°
Intake valve		
Overall length	Standard	101.71 mm (4.0043in.)
	Minimum	101.21 mm (3.9846in.)
Valve stem diameter		5.470 – 5.485 mm (0.2154 – 0.2159 in.)
Margin thickness	Standard	1.05 – 1.45 mm (0.041 – 0.057 in.)
	Minimum	0.5 mm (0.020 in.)
Exhaust valve		
Overall length	Standard	101.15 mm (3.9823in.)
	Minimum	100.70 mm (3.9646 in.)
Valve stem diameter		5.465 – 5.480 mm (0.2152 – 0.2157 in.)
Margin thickness	Standard	1.2 – 1.6 mm (0.047 – 0.063 in.)
	Minimum	0.5 mm (0.020 in.)
Intake valve guide bush		
Bushing inside diameter		5.510 – 5.530 mm (0.2169 – 0.2177 in.)
Oil clearance	Standard	0.025 – 0.060 mm (0.0098 – 0.00236 in.)
	Maximum	0.08 mm (0.0031 in.)
Diameter		10.285 – 10.306 mm (0.4049 – 0.4057 in.)
Protrusion height		9.6 – 10.0 mm (0.3779 – 0.3937 in.)
Exhaust valve guide bush		
Bushing inside diameter		5.510 – 5.530 mm (0.2169 – 0.2177 in.)
Oil clearance	Standard	0.030 – 0.065 mm (0.0012 – 0.0026 in.)
	Maximum	0.10 mm (0.0039 in.)
Diameter		10.285 – 10.306 mm (0.4049 – 0.4057 in.)
Protrusion height		9.6 – 10.0 mm (0.3779 – 0.3937 in.)

Valve lifter		
Lifter diameter		30.966 – 30.976 mm (1.2191 – 1.2195 in.)
Lifter bore diameter		31.009 – 31.025 mm (1.2208 – 1.2215 in.)
Oil clearance	Standard	0.033 – 0.059 mm (0.0013 – 0.0023 in.)
	Maximum	0.07 mm (0.0028 in.)
Ring w/head pin		
Protrusion height		3 mm (0.12 in.)
Connecting rod		
Thrust clearance	Standard	0.160 – 0.362 mm (0.0063 – 0.0143 in.)
	Maximum	0.362 mm (0.0143 in.)
Oil clearance	Standard	0.024 – 0.048 mm (0.0009 – 0.0019 in.)
	Maximum	0.08 mm (0.0031 in.)
Bushing inside diameter		22.005 – 22.014 mm (0.8663 – 0.8667 in.)
Oil clearance	Standard	0.001 – 0.007 mm (0.00004 – 0.00028 in.)
	Maximum	0.010 mm (0.0020 in.)
Out–of–alignment	Maximum per 100 mm (3.94 in.)	0.05 mm (0.0020 in.)
Rod twist	Maximum per 100 mm (3.94 in.)	0.15 mm (0.0059 in.)
Cylinder block		
Warpage	Maximum	0.05 mm (0.0020 in.)
Bore diameter	Standard	88.500 – 88.513 mm (3.4843 – 3.4848 in.)
Piston		
Piston diameter		88.439 – 88.449 mm (3.4818 – 3.4822 in.)
Piston oil clearance	Standard	0.051 – 0.074 mm (0.0020 – 0.0029 in.)
	Maximum	0.1 mm (0.0039 in.)
Piston ring		
Ring groove clearance		0.030 – 0.070 mm (0.0012 – 0.0028 in.)
End gap	Standard No. 1	0.22 – 0.32 mm (0.0087 – 0.0126 in.)
	No. 2	0.50 – 0.60 mm (0.0197 – 0.0236 in.)
	Oil (side rail)	0.10 – 0.35 mm (0.0039 – 0.0138 in.)
	Maximum No. 1	0.89 mm (0.0350 in.)
	No. 2	1.35 mm (0.0531 in.)
	Oil (side rail)	0.73 mm (0.0287 in.)
Piston pin		
Bushing inside diameter		22.001 – 22.010 mm (0.8662 – 0.8665 in.)
Piston pin diameter		21.997 – 22.006 mm (0.8660 – 0.8664 in.)
Oil clearance	Standard	0.005 – 0.011 mm (0.0002 – 0.0004 in.)
	Maximum	0.010 mm (0.0020 in.)
Connecting rod bolt		
Diameter	Standard	7.2 – 7.3 mm (0.283 – 0.287 in.)
	Minimum	7.0 mm (0.276 in.)
Crankshaft		
Thrust clearance	Standard	0.040 – 0.240 mm (0.0016 – 0.0094 in.)
	Maximum	0.30 mm (0.0118 in.)
Thrust washer thickness		1.930 – 1.980 mm (0.0760 – 0.0780 in.)
Circle runout	Maximum	0.03 mm (0.0012 in.)
Main journal diameter		54.988 – 55.000 (2.1648 – 2.06535 in.)
Oil clearance	Standard	0.017 – 0.040 mm (0.0007 – 0.0016 in.)
	Maximum	0.07 mm (0.0028 in.)
Crank pin taper and out– of –round	Maximum	0.003 mm (0.0001 in.)
Crank pin diameter		47.990 – 48.000 mm (1.8894 – 1.8898 in.)
Crankshaft bearing cap set bolt		
Diameter	Standard	7.5 – 7.6 mm (0.295 – 0.299 in.)
	Minimum	7.2 mm (0.283 in.)

1MZ–FE

Battery specific gravity	at 20°C (68°F)	1.25□1.29
New drive belt deflection	Pressing force: 98 N (10 kgf, 22 lbf)	
	For fan and generator	9.1 – 10.5 mm (0.358 – 0.413 in.)
	For vane pump	7.0 – 9.0 mm (0.276 – 0.354 in.)
Used drive belt deflection	Pressing force: 98 N (10 kgf, 22 lbf)	
	For fan and generator	11.0 – 13.5 mm (0.433 – 0.531 in.)
	For vane pump	10.0 – 12.0 mm (0.394 – 0.472 in.)
New drive belt tension		
	For fan and generator	617 – 853 N (63 – 87 kgf, 139 – 192 lbf)
	For vane pump	647 – 843 N (66 – 86 kgf, 146 – 190 lbf)
Used drive belt tension		
	For fan and generator	294 – 490 N (30 – 50 kgf, 66 – 110 lbf)
	For vane pump	323 – 519 N (33 – 53 kgf, 73 – 117 lbf)
Ignition timing	w/ Terminals TC and CG of DLC3 connected	8 – 12° BTDC
	w/ Terminals TC and CG of DLC3 disconnected	7 – 25° BTDC
Idle speed		550 – 650 r/min.
Compression pressure		1.47 MPa (15 kgf/cm^2, 213 psi)
Minimum pressure		0.98 MPa (10 kgf/cm^2, 142 psi)
Difference between each cylinder		100 kPa (1.0 kgf/cm^2, 14 psi)
Camshaft circle runout	Maximum	0.06 mm (0.0024 in.)
Camshaft cam lobe height	Standard Intake	42.11 – 42.21 mm (1.6579 – 1.6618 in.)
	Exhaust	41.96 – 42.06 mm (1.6520 – 1.6559 in.)
	Minimum Intake	41.96 mm (1.6520 in.)
	Exhaust	41.81 mm (1.6461 in.)
Camshaft Journal diameter		26.959 – 26.975 mm (1.0614 – 1.0620 in.)
12 pointed head cylinder head set bolt diameter at tension portion		
	Standard	8.95 – 9.05 mm (0.3524 – 0.3563 in.)
	Minimum	8.75 mm (0.3775 in.)
Valve clearance at cold	Intake	0.15 – 0.25 mm (0.006 – 0.010 in.)
	Exhaust	0.25 – 0.35 mm (0.010 – 0.014 in.)
Cylinder head warpage	Maximum Cylinder block side	0.05 mm (0.0020 in.)
	Intake manifold side	0.10 mm (0.0039 in.)
	Exhaust manifold side	0.10 mm (0.0039 in.)
Intake valve overall length	Standard	95.45 mm (3.7579 in.)
	Minimum	94.95 mm (3.7382 in.)
Intake valve stem diameter	Standard	5.470 – 5.485 mm (0.2154 – 0.2159 in.)
Intake valve margin thickness	Standard	1.0 mm (0.039 in.)
	Minimum	0.5 mm (0.020 in.)
Exhaust valve overall length	Standard	95.40 mm (3.7559 in.)
	Minimum	94.90 mm (3.7362 in.)
Exhaust valve stem diameter	Standard	5.465 – 5.480 mm (0.2152 – 0.2157 in.)
Exhaust valve margin thickness	Standard	1.0 mm (0.039 in.)
	Minimum	0.5 mm (0.020 in.)
Valve spring free length		45.50 mm (1.7913 in.)
Valve spring deviation	Maximum	2.0 mm (0.079 in.)
Valve spring installed tension at 33.8 mm (1.331 in.)		186 – 206 N (19.0 – 21.0 kgf, 41.9 – 46.3 lbf)

Bushing inside diameter		5.510 – 5.530 mm (0.2169 – 0.2177 in.)
Valve guide bushing oil clearance	Standard Intake	0.025 – 0.060 mm (0.0010 – 0.0024 in.)
	Exhaust	0.030 – 0.065 mm (0.0012 – 0.0026 in.)
	Maximum Intake	0.08 mm (0.0031 in.)
	Exhaust	0.10 mm (0.0039 in.)
Cylinder head valve guide bushing bore diameter	STD	10.295 – 10.313 mm (0.4053 – 0.4060 in.)
	O/S 0.05	10.345 – 10.363 mm (0.4073 – 0.4080 in.)
Bushing diameter	STD	10.333 – 10.344 mm (0.4068 – 0.4072 in.)
	O/S 0.05	10.383 – 10.394 mm (0.4088 – 0.4092 in.)
Bushing length	Intake	34.5 mm (1.358 in.)
	Exhaust	40.5 mm (1.594 in.)
Bushing protrusion height	Intake	11.1 – 11.5 mm (0.437 – 0.453 in.)
	Exhaust	8.9 – 9.3 mm (0.350 – 0.366 in.)
Lifter diameter		30.966 – 30.976 mm (1.2191 – 1.2195 in.)
Lifter bore diameter		31.000 – 31. 016 mm (1.2205 – 1.2211 in.)
Oil clearance	Standard	0.024 – 0.050 mm (0.0009 – 0.0021 in.)
	Maximum	0.07 mm (0.0028 in.)
Camshaft gear backlash	Standard	0.020 – 0.200 mm (0.0008 – 0.0079 in.)
	Maximum	0.30 mm (0.0118 in.)
Camshaft thrust clearance	Standard	0.040 – 0.090 mm (0.0016 – 0.0035 in.)
	Maximum	0.12 mm (0.0047 in.)
Camshaft oil clearance	Standard Intake #4, #5 journals	0.025 – 0.057 mm (0.0010 – 0.0022 in.)
	Other journals	0.025 – 0.062 mm (0.0010 – 0.0024 in.)
	Maximum	0.10 mm (0.0039 in.)
Connecting rod thrust clearance	Standard	0.15 – 0.30 mm (0.0059 – 0.0118 in.)
	Maximum	0.35 mm (0.0138 in.)
Connecting rod oil clearance	Standard	0.038 – 0.066 mm (0.0015 – 0.0026 in.)
	Maximum	0.08 mm (0.0031 in.)
Crankshaft thrust clearance	Standard	0.04 – 0.24 mm (0.0016 – 0.0094 in.)
	Maximum	0.30 mm (0.0118 in.)
Cylinder block warpage	Maximum	0.05 mm (0.0020 in.)
Cylinder bore diameter	Standard	87.500 – 87.512 mm (3.4449 – 3.4453 in.)
	Maximum	87.52 mm (3.4457 in.)
Piston diameter		87.406 – 87.416 mm (3.4412 – 3.4416 in.)
Oil clearance	Standard	0.084 – 0.106 mm (0.0033 – 0.0042 in.)
	Maximum	0.13 mm (0.0051 in.)
Connecting rod out–of alignment	Maximum	0.05 mm (0.0020 in.) per 100 mm (3.94 in.)
Connecting rod twist	Maximum	0.15 mm (0.0059 in.) per 100 mm (3.94 in.)
Connecting rod bushing inside diameter		22.005 – 22.014 mm (0.8663 – 0.8667 in.)
Piston pin diameter		21.997 – 22.006 mm (0.8660 – 0.8664 in.)
Oil clearance	Standard	0.005 – 0.011 mm (0.0002 – 0.0004 in.)
	Maximum	0.05 mm (0.0020 in.)
Piston ring groove clearance	No.1	0.02 – 0.07 mm (0.0008 – 0.0028 in.)
	No.2	0.02 – 0.06 mm (0.0008 – 0.0024 in.)
	Oil	0.03 – 0.11 mm (0.0011 – 0.0043 in.)
Piston ring end gap	Standard No.1	0.25 – 0.35 mm (0.0098 – 0.0138 in.)
	No.2	0.35 – 0.45 mm (0.0138 – 0.0177 in.)
	Oil (Side rail)	0.15 – 0.40 mm (0.0059 – 0.0157 in.)
	Maximum No. 1	0.95 mm (0.0374 in.)
	No.2	1.05 mm (0.0413 in.)
	Oil (Side rail)	1.00 mm (0.0394 in.)
Connecting rod bolt diameter	Standard	7.2 – 7.3 mm (0.283 – 0.287 in.)
	Minimum	7.0 mm (0.276 in.)
Crankshaft bearing cap set bolt diameter	Standard	7.5 – 7.6 mm (0.295 – 0.299 in.)
	Minimum	7.2 mm (0.283 in.)

Crankshaft circle runout	Maximum	0.06 mm (0.0024 in.)
Main journal diameter		60.988 – 61.000 mm (2.4011 – 2.4016 in.)
Main journal taper and out–of–round	Maximum	0.02 mm (0.0008 in.)
Crank pin diameter		52.992 – 53.000 mm (2.0863 – 2.0866 in.)
Crank pin taper and out–of–round	Maximum	0.02 mm (0.0008 in.)
Crankshaft oil clearance	Standard No. 1 and No. 4 journals	0.014 – 0.034 mm (0.0006 – 0.0013 in.)
	No. 2 and No. 3 journals	0.026 – 0.046 mm (0.0010 – 0.0018 in.)
	Maximum No. 1 and No. 4 journals	0.05 mm (0.0020 in.)
	No. 2 and No. 3 journals	0.06 mm (0.0024 in.)

030EU–01

TORQUE SPECIFICATION

2AZ–FE

Part Tightened	N·m	kgf·cm	ft·lbf
Engine mounting bracket No.2 RH x Timing chain cover	52	531	38
Engine moving control rod w/ bracket x Engine mounting bracket No.2 RH	64	653	47
Engine moving control rod w/ bracket x Fender apron RH	64	653	47
Engine mounting stay No.2 RH x Cylinder head	64	653	47
Engine mounting stay No.2 RH x Engine mounting bracket No.2 RH	64	653	47
Front wheel RH	103	1,050	76
Drain plug (Automatic transaxle)	49	500	36
Drain plug (Manual transaxle)	49	500	36
Engine hanger No.1 x Cylinder head	38	387	28
Engine hanger No.2 x Cylinder head	38	387	28
E.F.I. Engine coolant temperature sensor x Cylinder head	20	208	15
Knock control sensor x Cylinder block	39	398	29
Engine oil pressure switch assy x Cylinder head	15	153	11
Water by–pass pipe No.1 x Cylinder block	9.0	92	80 in.·lbf
Transverse engine engine mounting bracket x Cylinder block	54	551	40
Drive shaft bearing bracket x Cylinder block	64	653	47
V–ribbed belt tensioner assy x Timing chain cover	59.5	607	44
Ignition coil assy x Cylinder head	9.0	92	80 in.·lbf
Water inlet x Cylinder block	9.0	92	80 in.·lbf
Exhaust manifold converter x Cylinder head	37	378	27
Exhaust manifold stay x Exhaust manifold converter	44	449	32
Manifold converter insulator No. 1 x Exhaust manifold converter	12	122	9
Oil level gauge guide x Water by–pass pipe No. 1	9.0	92	80 in.·lbf
Intake manifold x Cylinder head	30	306	22
Drive plate & ring gear (Automatic transaxle) x Crankshaft	98	1,000	72
Flywheel sub–assy (Manual transaxle) x Crankshaft	130	1,330	96
Starter assy x Automatic transaxle assy	39	398	29
Starter assy x Manual transaxle assy	39	398	29
Engine mounting insulator LH x Automatic transaxle assy	95	969	70
Engine mounting insulator LH x Manual transaxle assy	143	1,459	106
Engine mounting insulator RH x Transverse engine engine mounting bracket	95	969	70
Engine mounting insulator FR x Engine mounting bracket FR	87	888	64
Engine mounting bracket rear No. 2 x Engine lateral control rod(Manual transaxle)	89	910	69
Vane pump assy x Timing chain cover	43	439	31
Frame side plate x Front frame assy Bolt A	85	867	63
Frame side plate x Body Bolt B	32	326	24
Front suspension member brace rear x Front frame assy Bolt C	85	867	63
Front suspension member brace rear x Body Bolt D	32	326	24
Steering intermediate shaft	35	357	26
Drive plate & ring gear x Torque converter	41	418	30
Front suspension arm sub–assy lower No. 1 x Lower ball joint	127	1,296	94
Tie rod assy x Steering knuckle	49	500	36
Speed sensor front LH (w/ ABS) x Steering knuckle	8.0	82	71 in.·lbf
Speed sensor front RH (w/ ABS) x Steering knuckle	8.0	82	71 in.·lbf
Front axle hub LH nut x Front drive shaft	294	3,000	217
Front stabilizer link assy x Front suspension	74	755	55
Air cleaner assy x Body	5.0	51	44 in.·lbf

Part Tightened		N·m	kgf·cm	ft·lbf
Balance shaft housing x Stiffening crankcase assy	1st 2nd	22 Turn 90°	220 Turn 90°	16 Turn 90°
Stiffening crankcase assy x Cylinder block		33	332	24
w/ head taper screw plug No. 1 x Cylinder block		26	265	19
Oil control valve filter x Cylinder block		30	306	22
Cylinder block water drain cock x Stiffening crankcase assy		25	255	18
Cylinder head x Cylinder block	1st 2nd	79 Turn 90°	806 Turn 90°	58 Turn 90°
Camshaft timing gear assy x Camshaft		54	551	40
Camshaft timing sprocket x Camshaft		54	551	40
Camshaft bearing cap No. 1 x Cylinder head		30	301	22
Camshaft bearing cap No. 2 x Cylinder head		30	301	22
Camshaft bearing cap No. 3 x Cylinder head		9.0	92	80 in.·lbf
Oil pump assy x Stiffening crankcase assy		19	194	14
Chain tensioner plate x Stiffening crankcase assy		12	122	9
Oil pump drive sprocket x Oil pump		30	301	22
Chain vibration damper No. 1 x Cylinder head		9.0	92	80 in.·lbf
Chain vibration damper No. 1 x Cylinder block		9.0	92	80 in.·lbf
Chain tensioner slipper x Cylinder block		19	194	14
Timing chain guide x Crankshaft bearing cap No. 1		9.0	92	80 in.·lbf
Timing chain cover (See page14–41)	Bolt A Bolt B Bolt C Nut	9.0 21 43 9.0	92 214 438 92	80 in.·lbf 15 32 80 in.·lbf
Oil pan x Stiffening crankcase assy		9.0	92	80 in.·lbf
Oil pan drain plug x Oil pan		25	250	18
Water pump assy x Cylinder block		9.0	92	80 in.·lbf
Water pump pulley x Water pump assy		26	265	19
Crank position sensor x Timing chain cover		9.0	92	80 in.·lbf
Crankshaft pulley x Crankshaft		170	1,733	125
Chain tensioner assy No. 1 x Timing chain cover		9.0	92	80 in.·lbf
Camshaft position sensor x Cylinder head		9.0	92	80 in.·lbf
Cylinder head cover x Cylinder head		11	110	8
Oil filter union x Stiffening crankcase assy		30	306	22
Spark plug x Cylinder head		19	194	14
Ventilation valve x Cylinder head cover		19	194	14
Stud bolt (See page14–107)	Bolt A Bolt B Bolt C Bolt D	5 5 10 10	51 51 97 97	44 in.·lbf 44 in.·lbf 84 in.·lbf 84 in.·lbf
Front suspension brace x Body		80	816	59
Connecting rod cap x Connecting rod	1st 2nd	25 Turn 90°	250 Turn 90°	18 Turn 90°
Crankshaft bearing cap x Cylinder block	1st 2nd	20 40	204 408	15 29
Stud bolt (See page14–119)	Stud bolt A Stud bolt B Stud bolt C	5.0 10 5.0	51 97 51	44 in.·lbf 84 in.·lbf 44 in.·lbf

1MZ–FE

Part Tightened	N·m	kgf·cm	ft·lbf
Engine hanger No. 2 x Cylinder head	20	199	14
Knock control sensor x Cylinder block	39	398	29
Oil pressure switch assy x Cylinder block	15	152	11

Part Tightened		N·m	kgf·cm	ft·lbf
Compressor mounting bracket No.1 x Cylinder block		25	255	18
Generator bracket No.1 x Cylinder block		58	591	43
Pump bracket x Cylinder head		32	326	24
Drive shaft bearing bracket x Cylinder block		64	653	47
Exhaust manifold LH x Cylinder head		49	500	36
Exhaust manifold RH x Cylinder head		49	500	36
Ignition coil assy x Cylinder head cover		8.0	82	71 in.·lbf
Surge tank stay No.1 x Cylinder head		20	199	14
Surge tank stay No.1 x Intake air surge tank		20	199	14
Engine hanger No. 1 x Cylinder head		39	398	29
Engine hanger No. 1 x Intake air surge tank		39	398	29
Manifold stay No. 2 x Exhaust manifold LH		34	347	25
Manifold stay No. 2 x Automatic transaxle assy		34	347	25
Engine mounting insulator RH x Engine mounting bracket		95	969	70
Engine mounting insulator LH x Automatic transaxle assy		95	969	70
Engine mounting insulator FR x Automatic transaxle assy		87	887	64
Vane pump assy x Pump bracket		43	439	32
Vane pump assy x Engine mounting bracket		43	439	32
Frame side rail plate sub–assembly x Front frame assy (See page 14–155)	Bolt A	85	867	63
	Bolt B	32	326	24
	Nut	32	326	24
Front suspension member brace rear x Front frame assy (See page 14–155)	Bolt C	85	867	63
	Bolt D	32	326	24
	Nut	32	326	24
Compressor and magnetic clutch x Compressor mounting bracket No.1 (See page 14–155)	Bolt	25	250	18
	Nut	26	260	19
Generator belt adjusting bar x Cylinder block (See page 14–155)	Nut A	43	438	32
	Bolt B	18	184	13
	Bolt C	8.0	82	71 in.·lbf
Generator bracket No. 2 x Transverse engine engine mounting bracket		28	286	21
Intermediate shaft sub–assy		35	357	26
Drive plate & ring gear x Torque converter		41	418	30
Flywheel housing under cover x Automatic transaxle assy		7.8	80	69 in.·lbf
Front suspension arm x Lower ball joint		127	1,295	94
Tie rod end x Steering knuckle		49	500	36
Front axle hub nut x Front drive shaft		294	2,998	217
Front stabilizer link assy x Front suspension		74	755	55
V–bank cover x Cylinder head cover		7.9	81	70 in.·lbf
Engine mounting stay No. 2 RH x Transverse engine engine mounting bracket		64	653	47
Engine moving control rod (See page 14–155)	Bolt A	64	653	47
	Bolt B	23	235	17
Front wheel		103	1,050	76
Camshaft sub–gear x Main gear		5.4	55	48 in.·lbf
Engine rear oil seal retainer x Cylinder block		8.0	82	71 in.·lbf
Oil pump assy x Cylinder block (See page 14–173)	10 mm head	8.0	82	71 in.·lbf
	12 mm head	20	199	14
	14 mm head	43	439	32
Crank position sensor x Oil pump assy		8.0	82	71 in.·lbf
Oil pan baffle plate x Oil pan sub–assy		8.0	82	71 in.·lbf

Part Tightened		N·m	kgf·cm	ft·lbf
Oil pan sub–assy x Cylinder block (See page 14–173)	10 mm head	8.0	82	71 in.·lbf
	12 mm head	20	199	14
Oil strainer sub–assy x Oil pan sub–assy		8.0	82	71 in.·lbf
Oil pan sub–assy No. 2 x Oil pan sub–assy		8.0	82	71 in.·lbf
Oil pan drain plug x Oil pan sub–assy No. 2		45	459	33
Water inlet housing x Cylinder block		8.0	82	71 in.·lbf
Cylinder head x Cylinder block	12 pointed head 1st	54	551	40
	2nd	Turn 90°	Turn 90°	Turn 90°
	Recessed head	19	189	14
Camshaft bearing cap x Cylinder head		16	163	12
Timing belt plate x Oil pump assy		8.0	82	71 in.·lbf
Water pump assy x Cylinder block		8.0	82	71 in.·lbf
Oil level gage guide x Cylinder block		8.0	82	71 in.·lbf
Oil filter union x Cylinder block		30	306	22
Timing belt idler bracket x Cylinder block		28	286	21
Timing belt No. 3 cover x Cylinder head		8.5	87	76 in.·lbf
Camshaft timing pulley x Camshaft		125	1,275	92
Timing belt idler sub–assy No. 2 x Timing belt idler bracket		43	438	32
Timing belt idler sub–assy No. 1 x Cylinder block		34	347	25
Chain tensioner assy No. 1 x Oil pump assy		27	280	20
Transverse engine engine mounting bracket x Cylinder block		28	286	21
Timing belt No. 2 cover x Timing belt No. 3 cover		8.5	87	76 in.·lbf
Timing belt No. 1 cover x OIl pump assy		8.5	87	76 in.·lbf
Crankshaft pulley x Crankshaft		215	2,192	159
Camshaft position sensor x Cylinder head		8.0	82	71 in.·lbf
Cylinder head cover x Cylinder head		8.0	82	71 in.·lbf
Spark plug x Cylinder head		18	184	13
W/head straight screw plug No. 1 x Cylinder head		44	449	32
W/head straight screw plug No. 2 x Cylinder head		44	449	32
Connecting rod cap x Connecting rod	1st	25	250	18
	2nd	Turn 90°	Turn 90°	Turn 90°
Main bearing cap x Cylinder block	12 pointed head 1st	22	224	16
	2nd	Turn 90°	Turn 90°	Turn 90°
	6 pointed head	27	275	20
Cylinder block w/head straight screw No. 1 plug x Cylinder block		30	306	22
Cylinder block w/head straight screw No. 2 plug x Cylinder block		50	510	37
Cylinder block w/head straight screw No. 3 plug x Cylinder block		30	306	22
Water seal plate x Cylinder block		18	184	13
Cylinder block water drain cock sub–assy x Cylinder block		39	398	29
Vane pump assy x Adjusting strut		43	439	32
Generator x Generator bracket		58	591	43
Generator x Adjusting bar		18	184	13
Intake air surge tank x Intake manifold		43	438	32
Front suspension brace upper x Body		80	816	59
Drive plate & ring gear sub–assy x Crankshaft		83	846	61
Water outlet x Cylinder head		15	153	11
Intake manifold x Cylinder head		15	153	11
EGR pipe No.2 x EGR valve		12	120	9
EGR pipe No.2 x EGR cooler No.1		12	120	9
Exhaust manifold heat insulator No.2 x Exhaust manifold LH		8.5	87	55 in.·lbf
EGR cooler No.1 x Cylinder block		9.0	92	80 in.·lbf
EGR pipe No.1 x EGR cooler No.1		12	120	9

Part Tightened	N·m	kgf·cm	ft·lbf
EGR pipe No.1 x Exhaust manifold LH	12	120	9
Exhaust pipe support bracket No.1 x Automatic transaxle assy	21	214	15

EXHAUST

030EV–01

TORQUE SPECIFICATION

2AZ–FE

Part Tightened	N·m	kgf·cm	ft·lbf
Exhaust pipe damper (A/T) x Exhaust pipe assy center	19	194	14
Exhaust pipe assy center x Tail pipe assy	56	571	41
Floor panel brace rear x Body	19.5	199	14
Exhaust pipe assy front x Exhaust pipe assy center	56	571	41
Exhaust pipe assy front x Exhaust manifold converter sub–assy	62	633	46
Exhaust pipe No. 1 support bracket x Exhaust pipe assy front	33	337	24
Exhaust pipe No. 1 support bracket x Exhaust pipe assy front	33	337	24
Oxygen sensor x Exhaust pipe assy front	44	450	33

1MZ–FE

Part Tightened	N·m	kgf·cm	ft·lbf
Exhaust pipe assy center x Tail pipe assy	56	571	41
Exhaust pipe assy front x Exhaust manifold RH	62	633	47
Exhaust pipe assy front x Exhaust manifold converter No.2	62	633	47
Exhaust pipe assy front x Exhaust pipe assy center	56	571	41
Exhaust pipe No.1 support bracket x Body	33	337	24
Floor panel brace rear x Body	20	199	14
Exhaust pipe No.1 support bracket x Exhaust pipe support bracket No.1	33	337	24
Oxygen sensor x Exhaust pipe assy front	44	449	32

COOLING

030EW–01

SERVICE DATA

2AZ–FE

Thermostat		
Valve opening temperature		80 – 84°C (176 – 183°F)
Valve lift	at 95°C (203°F)	10 mm (0.394 in.) or more
Radiator cap sub–assy		
Standard opening pressure		93 – 122 kPa (0.95 – 1.25 kgf/cm^2, 13.4 – 17.6 psi)
Minimum opening pressure		78 kPa (0.8 kgf/cm^2, 11.2 psi)
Cooling fan		
Standard amperage	at 20°C (68°F)	4.9 – 8.5 A
Coolant		
Capacity		6.2 liters (6.6 US qts, 5.4 lmp. qts)

1MZ–FE

Thermostat		
Valve opening temperature		80 – 84°C (176 – 183°F)
Valve lift	at 95°C (203°F)	10 mm (0.394 in.) or more
Radiator cap sub–assy		
Standard opening pressure		83.4 – 112.8 kPa (0.85 – 1.15 kgf/cm^2, 12.1 – 16.4 psi)
Minimum opening pressure		69 kPa (0.7 kgf/cm^2, 10.0 psi)
Cooling fan		
Standard amperage	at 20°C (68°F)	8.0 – 12.0 A
Coolant		
Capacity		9.2 liters (9.7 US qts, 8.1 lmp. qts)

030EX–01

TORQUE SPECIFICATION

2AZ–FE

Part Tightened	N·m	kgf·cm	ft·lbf
Water pump x Cylinder block	9.0	92	80 in.·lbf
Water pump x Water pump pulley	26	265	19
Water inlet x Cylinder block	9.0	92	80 in.·lbf
Fan assy, w/ motor x Radiator assy	5.0	51	44 in.·lbf
Radiator support upper x body	14	142	10

1MZ–FE

Part Tightened	N·m	kgf·cm	ft·lbf
Water pump assy x Cylinder block	8	82	71 in.·lbf
Idler sub–assy No.2 x Cylinder block	43	438	32
Transverse engine engine mounting bracket x Cylinder block	28	286	21
Generator bracket No.2 x Cylinder block	28	286	21
Front wheel	103	1051	76
Water inlet x Cylinder block	8	82	71 in.·lbf
Water inlet pipe x Water inlet	20	204	15
Fan assy, w/ motor x Radiator assy	5.0	51	44 in.·lbf
Radiator support upper x body	14	142	10

LUBRICATION

030EY–01

SERVICE DATA

2AZ–FE

Oil pressure	at idle speed	29 kPa (0.3 kgf·cm^2, 4.3 psi) or more
	at 3,000 rpm	245 – 539 kPa (2.5 – 5.5 kgf·cm^2, 36 – 78 psi) or more
Oil pump		
Side clearance	Standard	0.030–0.085 mm (0.0012–0.0033 in.)
	Maximum	0.16 mm (0.0063 in.)
Tip clearance	Standard	0.080–0.160 mm (0.0031–0.0063 in.)
	Maximum	0.35 mm (0.0138 in.)
Body clearance	Standard	0.100–0.170 mm (0.00394–0.00669 in.)
	Maximum	0.325 mm (0.01280 in.)
Engine oil		
Oil capacity	Drain and refill w/ oil filter change	3.8 liters (4.0 US qts, 3.3 lmp. qts)
	Drain and refill w/o oil filter change	3.6 liters (3.8 US qts, 3.2 lmp. qts)
	Dry fill	4.5 liters (4.8 US qts, 4.0 lmp. qts)

1MZ–FE

Oil pressure	at idle speed	29 kPa (0.3 kgf·cm^2, 4.3 psi) or more
	at 3,000 rpm	294 – 539 kPa (3.0 – 5.5 kgf·cm^2, 43 – 78 psi)
Oil pump		
Side clearance	Standard	0.03 – 0.09 mm (0.0012 – 0.0035 in.)
	Maximum	0.15 mm (0.0059 in.)
Tip clearance	Standard	0.11 – 0.24 mm (0.0043 – 0.0094 in.)
	Maximum	0.35 mm (0.0138 in.)
Body clearance	Standard	0.125 – 0.162 mm (0.0050 – 0.0064 in.)
	Maximum	0.30 mm (0.0118 in.)
Engine oil		
Oil capacity	Drain and refill w/ oil filter change	4.7 liters (5.0 US qts, 4.1 lmp. qts)
	Drain and refill w/o oil filter change	4.5 liters (4.8 US qts, 4.0 lmp. qts)
	Dry fill	5.5 liters (5.8 US qts, 4.8 lmp. qts)

030EZ–01

TORQUE SPECIFICATION

2AZ–FE

Part Tightened	N·m	kgf·cm	ft·lbf
Oil pressure switch x Cylinder head	15	152	11
Oil pump x Cylinder block	19	194	14
Oil pump x Oil pump cover	8.8	90	78 in.·lbf
Oil pump x Oil pump strainer	8.8	90	78 in.·lbf
Oil drain plug x Oil pan sub–assy	25	255	18

1MZ–FE

Part Tightened		N·m	kgf·cm	ft·lbf
Oil pressure switch x Cylinder block		15	152	11
Oil pump rotor set x Oil pump assembly		10	105	8
Oil pump relief valve x Oil pump assembly		24	245	18
Drain plug x Oil pump sub–assembly No.2		45	459	33
Oil pump assembly x Cylinder block (See page 17–10)	10 mm head 12 mm head 14 mm head	8 20 43	82 199 439	71 in.·lbf 14 32
Crank position sensor x Oil pump assembly		8	82	71 in.·lbf
Oil pan sub–assembly x Cylinder block (See page 17–10)	10 mm head 12 mm head	8 20	82 199	71 in.·lbf 14
Oil strainer x Main bearing cap		8	82	71 in.·lbf
Oil pan sub–assembly No.2 x Oil pan sub–assembly No.1		8	82	71 in.·lbf
Transverse engine engine mounting bracket x Cylinder block (See page 17–10)	Bolt A Nut B	54 54	550 550	40 40
Transverse engine engine mounting bracket x PS pump bracket		43	439	32
Engine mounting insulator RH x Engine mounting bracket		95	969	70
Engine mounting insulator RH x Front frame		87	887	64
Engine mounting insulator FR x Cylinder block		87	887	64
Engine mounting insulator FR x Front frame		52	531	38
Oil level gage guide x Cylinder block		8	82	71 in.·lbf
Compressor mounting bracket No.1 x Cylinder block		25	250	18
Generator bracket No.2 x Transverse engine engine mounting bracket		28	286	21
Timing belt idler sub–assembly No.1 x Cylinder block		34	347	25
Compressor and magnetic clutch x Compressor mounting bracket		25	250	18
Front suspension brace sub–assembly upper center x Body		80	816	59
Front wheel		103	1051	76

IGNITION

030F0–01

SERVICE DATA

2AZ–FE

Spark plug		
Recommended spark plug	DENSO	SK20R11
	NGK	IFR6A11
Electrode gap	Standard	1.0 – 1.1mm (0.039 – 0.043 in.)
	Maximum	1.3 mm (0.051 in.)
Camshaft position sensor		
Resistance	at cold	835 – 1,400Ω
	at hot	1,060 – 1,645Ω
Crank position sensor		
Resistance	at cold	985 – 1,600Ω
	at hot	1,265 – 1,890Ω

1MZ–FE

Spark plug		
Recommended spark plug	DENSO	SK20R11
	NGK	IFR6A11
Electrode gap	Standard	1.0–1.1mm (0.039–0.043 in.)
	Maximum	1.2mm (0.047 in.)
Camshaft position sensor		
Resistance	at cold	835–1400Ω
	at hot	1060–1645Ω
Crank position sensor		
Resistance	at cold	1630–2740Ω
	at hot	2065–3225Ω

030F1–01

TORQUE SPECIFICATION

2AZ–FE

Part Tightened	N·m	kgf·cm	ft·lbf
Spark plug x Cylinder head cover	19	194	14
Ignition coil x Cylinder head cover	9.0	92	80 in.·lbf

1MZ–FE

Part Tightened	N·m	kgf·cm	ft·lbf
Spark plug x Cylinder head cover	18	184	13
Ignition coil x Cylinder head cover	8.0	82	71 in.·lbf

STARTING & CHARGING

030F2–01

SERVICE DATA

2AZ–FE

Starter assy		
Specified current		90 A or less at 11.5 V
Circle runout	Standard	0.02 mm (0.0008 in.)
	Maximum	0.05 mm (0.0020 in.)
Commutator length	Standard	3.3 mm (0.1299 in.)
	Minimum	4.0 mm (0.1575 in.)
Brush holder length	Standard	9.0 mm (0.3543 in.)
	Minimum	4.0 mm (0.1575 in.)
Snap ring length	Maximum	5.0 mm (0.1969 in.)
Battery		
Voltage	Standard	12.5 – 12.9 V at 20°C (68°F)
Generator assy		
Rotor coil resistance	at 20°C (68°F)	2.7 – 3.1 Ω
Slip ring diameter	Standard	14.2 – 14.4 mm (0.559 – 0.567 in.)
	Minimum	12.8 mm (0.504 in.)
Brush exposed length	Standard	9.5 – 11.5 mm (0.374 – 0.453 in.)
	Minimum	1.5 mm (0.059 in.)

1MZ–FE

Starter assy		
Specified current		90 A or less at 11.5 V
Circle runout	Standard	0.02 mm (0.0008 in.)
	Maximum	0.05 mm (0.0020 in.)
Commutator length	Standard	3.3 mm (0.1299 in.)
	Maximum	4.0 mm (0.1575 in.)
Brush holder length	Standard	9.0 mm (0.3543 in.)
	Maximum	4.0 mm (0.1575 in.)
Snap ring length		5.0 mm (0.1969 in.)
Battery		
Voltage	Standard	12.5 – 12.9 V at 20°C (68°F)
Generator assy		
Rotor coil resistance	at 20°C (68°F)	2.7 – 3.1 Ω
Slip ring diameter	Standard	14.2 – 14.4 mm (0.559 – 0.567 in.)
	Minimum	12.8 mm (0.504 in.)
Brush exposed length	Standard	9.5 – 11.5 mm (0.374 – 0.453 in.)
	Minimum	1.5 mm (0.059 in.)

030F3–01

TORQUE SPECIFICATION

2AZ–FE

Part Tightened		N·m	kgf·cm	ft·lbf
Lead wire of field frame x Magnetic switch		5.9	60	52 in.·lbf
Starter x Engine	Bolt	39	398	29
	Terminal 30	13	130	9
Starter Assy				
Commutator end frame assy x Motor terminal starter kit		6.0	61	53 in.·lbf
Repair service starter kit x Motor terminal starter kit		7.5	77	66 in.·lbf
Lead wire x Terminal C of starter		6.5	66	58 in.·lbf
Generator assy x Engine	M8	21	214	15
	M10	52	530	38
Wiring harness clamp		8.4	85	74 in.·lbf
Alternator wire		9.8	100	7
Generator assy				
Rectifire end frame x Drive end frame (See page 19–15)				
	Nut A	4.5	46	39 in.·lbf
	Nut B	5.4	55	47 in.·lbf
Recrifire holder x Coil lead on rectifire end frame		2.9	30	26 in.·lbf
Voitage regulator x Rectifire end frame		2.0	20	18 in.·lbf
Brush holder x Rectifire end frame		2.0	20	18 in.·lbf
Rear end cover x Rectifire holder		4.4	45	39 in.·lbf
Plate terminal x Rectifire holder		3.9	39	35 in.·lbf
Terminal insulator x Rectifire holder		4.1	42	36 in.·lbf
Generator pulley x Rotor		111	1,125	81

1MZ–FE

Part Tightened		N·m	kgf·cm	ft·lbf
Lead wire of field frame x Magnetic switch		5.9	60	52 in.·lbf
Starter x Engine	Bolt	42	429	31
	Nut	9.8	100	7
Starter Assy				
Commutator end frame assy x Motor terminal starter kit		6.0	61	53 in.·lbf
Repair service starter kit x Motor terminal starter kit		7.5	77	66 in.·lbf
Lead wire x Terminal C of starter		6.5	66	58 in.·lbf
Generator x Engine	Bolt A	58	592	43
(see page 19–33)	Bolt B	18	184	13
Alternator wire		9.8	100	7
Generator assy				
Rectifire end frame x Drive end frame				
	For without cord clip	4.5	46	39 in.·lbf
	For with cord clip	5.4	55	47 in.·lbf
Recrifire holder x Coil lead on rectifire end frame		2.9	30	26 in.·lbf
Voitage regulator x Rectifire end frame		2.0	20	18 in.·lbf
Brush holder x Rectifire end frame		2.0	20	18 in.·lbf
Rear end cover x Rectifire holder		4.4	45	39 in.·lbf
Plate terminal x Rectifire holder		3.9	39	35 in.·lbf
Terminal insulator x Rectifire holder		4.1	42	36 in.·lbf
Generator pulley x Rotor		111	1,125	81

FRONT SUSPENSION

SERVICE DATA

030E9–01

Cold tire inflation pressure	Tire size: P205/65R15 92T Tire size: P205/65R15 92H Tire size: 205/65R15 94V Tire size: P215/60R16 94V	Front, Rear Front, Rear Front, Rear Front, Rear	220 kPa (2.0 kgf/cm^2, 29 psi)
Front wheel alignment	Vehicle height		
	1MZ–FE COMFORT	Front: A *1 – B *2	120 mm (4.72 in.)
		Rear: D *4 – C *3	46 mm (1.81 in.)
	1MZ–FE PREMIUM (USA, Canada)	Front: A *1 – B *2	119 mm (4.69 in.)
		Rear: D *4 – C *3	47 mm (1.85 in.)
	1MZ–FE PREMIUM (Mexico)	Front: A *1 – B *2	106 mm (4.17 in.)
		Rear: D *4 – C *3	33 mm (1.30 in.)
	1MZ–FE SPORT	Front: A *1 – B *2	120 mm (4.72 in.)
		Rear: D *4 – C *3	48 mm (1.89 in.)
	2AZ–FE COMFORT (USA, Canada)	Front: A *1 – B *2	119 mm (4.69 in.)
		Rear: D *4 – C *3	45 mm (1.77 in.)
	2AZ–FE COMFORT (Mexico)	Front: A *1 – B *2	106 mm (4.17 in.)
		Rear: D *4 – C *3	33 mm (1.30 in.)
	2AZ–FE PREMIUM	Front: A *1 – B *2	120 mm (4.72 in.)
		Rear: D *4 – C *3	45 mm (1.77 in.)
	2AZ–FE SPORT	Front: A *1 – B *2	120 mm (4.72 in.)
		Rear: D *4 – C *3	48 mm (1.89 in.)
	Toe–in (total)		0° ± 12' (0° ± 0.2°, 0 ± 2 mm, 0 ± 0.08 in.)
		Rack end length difference	1.5 mm (0.059 in.) or less
	Wheel angle		
	15 inch (USA, Canada)	Inside wheel	39°04' ± 2° (39.07° ± 2°)
		Outside wheel: Reference	33°44' (33.73°)
	15 inch (Mexico)	Inside wheel	39°30' ± 2° (39.50° ± 2°)
		Outside wheel: Reference	34°02' (34.03°)
	16 inch (USA, Canada)	Inside wheel	36°39' ± 2° (36.65° ± 2°)
		Outside wheel: Reference	32°11' (32.18°)
	16 inch (Mexico)	Inside wheel	37°00' ± 2° (37.00° ± 2°)
		Outside wheel: Reference	32°28' (32.47°)
	Camber	USA, Canada:	–0°43' ± 45' (–0.72° ± 0.75°)
		Mexico:	–0°33' ± 45' (–0.55° ± 0.75°)
		Right–left error	45' (0.75°) or less
	Caster		
	1MZ–FE SPORT		2°39' ± 45' (2.65° ± 0.75°)
	1MZ–FE Except SPORT (USA, Canada)		2°37' ± 45' (2.62° ± 0.75°)
	1MZ–FE Except SPORT (Mexico)		2°33' ± 45' (2.55° ± 0.75°)
	2AZ–FE SPORT		2°43' ± 45' (2.72° ± 0.75°)
	2AZ–FE Except SPORT (USA, Canada)		2°39' ± 45' (2.65° ± 0.75°)
	2AZ–FE Except SPORT (Mexico)		2°36' ± 45' (2.60° ± 0.75°)
		Right–left error	45' (0.75°) or less
	Steering axis inclination	USA, Canada:	11°27' ± 45' (11.45° ± 0.75°)
		Mexico:	11°05' ± 45' (11.08° ± 0.75°)
		Right–left error	45' (0.75°) or less
Front suspension	Lower ball joint turning torque		0.98 – 3.43 N·m (10 – 35 kgf·cm, 8.7 – 30 in.·lbf)
	Stabilizer bar link ball joint turning torque		0.05 – 1.96 N·m (0.5 – 20 kgf·cm, 0.4 – 17.4 in.·lbf)

***1: Ground clearance of front wheel center**
***2: Ground clearance of lower suspension arm No. 2 set bolt center**
***3: Ground clearance of strut rod set bolt center**
***4: Ground clearance of rear wheel center**

030EA–01

TORQUE SPECIFICATION

Part Tightened		N·m	kgf·cm	ft·lbf
Tie rod end lock nut		74	755	55
Steering knuckle x Shock absorber		210	2,141	155
Hub nut		103	1,050	76
Suspension support x Body		80	816	59
Suspension support x Piston rod		49	500	36
Speed sensor wire harness bracket set bolt (w/ ABS)		18.8	192	14
Flexible hose x Shock absorber (w/o ABS)		18.8	192	14
Lower suspension arm set bolt	Front side:	200	2,039	148
	Rear side:	206	2,101	152
Transverse engine engine mounting insulator set nut		87	887	64
Transverse engine engine mounting insulator x Bracket (MT)		64	653	47
Stabilizer bar bracket x Suspension member		19	194	14
Front suspension member dynamic damper x Front frame assy		29	296	21
Stabilizer bar link set nut		74	755	55

REAR SUSPENSION

030FH–01

SERVICE DATA

Rear wheel alignment	Toe–in (total)	0°22’ ± 11’ (0.3° ± 0.2°, 4 ± 2 mm, 0.16 ± 0.08 in.)
	No.2 lower suspension arm length difference	1.0 mm (0.039 in.) or less
	Camber USA, Canada:	–1°16’ ± 45’ (–1.27° ± 0.75°)
	Mexico:	–1°09’ ± 45’ (–1.15° ± 0.75°)
	Right–left error	45’ (0.75°) or less
Rear suspension	Stabilizer bar link ball joint turning torque	0.05 – 1.0 N·m (0.5 – 10 kgf·cm, 0.4 – 8.7 in.·lbf)

030FG–01

TORQUE SPECIFICATION

Part Tightened		N·m	kgf·cm	ft·lbf
Shock absorber x Body		39	400	29
Shock absorber x Rear axle carrier		255	2,600	188
Flexible hose x Shock absorber		19	194	14
ABS speed sensor wire harness x Shock absorber		5.5	56	49 in·lbf
Piston rod set nut		49	500	36
Shock absorber x Stabilizer bar link		39	400	29
Rear suspension member x Rear suspensio arm assy No. 1 LH		100	1,020	74
Rear suspension member x Body	A, B	55	561	41
	C	38	387	28
Rear suspension arm assy No. 1 x Rear axle carrier		100	1,020	74
Rear suspension arm assy No. 2 x Rear axle carrier		100	1,020	74
Stabilizer bar bracket		19	195	14
Stabilizer bar x Stabilizer bar link		39	400	29
Strut rod x Body		113	1,150	83
Strut rod x Rear axle carrier		113	1,152	83
Parking brake cable x Body		5.4	55	48 in.·lbf
Hub nut		103	1,050	76

TIRE & WHEEL

SERVICE DATA

030E6–01

Tire runout	1.0 mm (0.039 in.) or less
Imbalance after adjustment	8.0 g (0.018 lb) or less

DRIVE SHAFT / PROPELLER SHAFT / AXLE

030EJ–01

SERVICE DATA

Front axle hub bearing	Backlash	Maximum: 0.05 mm (0.0020 in.)
Front axle hub bearing	Deviation	Maximum: 0.05 mm (0.0020 in.)
Rear axle hub bearing	Backlash	Maximum: 0.05 mm (0.0020 in.)
Rear axle hub bearing	Deviation	Maximum: 0.07 mm (0.0027 in.)

030EK–01

TORQUE SPECIFICATION

Part Tightened	N·m	kgf·cm	ft·lbf
Front wheel set nut	103	1,050	76
Lower ball joint x Lower suspension arm	127	1,295	94
Tie rod end x Steering knuckle	49	500	36
Axle hub x Front drive shaft	294	2,998	217
Front drive shaft center bearing set bolt	32.4	330	24
Front speed sensor set bolt (w/ ABS)	8.0	82	71
Front flexible hose and speed sensor wire harness x Shock absorber (w/ ABS)	18.8	192	14
Front flexible hose x Shock absorber (w/o ABS)	18.8	192	14
Rear wheel set nut	103	1,050	76
Rear flexible hose x Shock absorber	18.8	192	14
Shock absorber x Rear axle carrier	255	2,600	188
Rear axle hub set bolt	80	816	59
Rear axle carrier x Brake caliper (Rear disc brake)	61.8	630	46
Rear wheel brake cylinder x Brake tube (Rear drum brake)	15.2	155	11

BRAKE

SERVICE DATA

030FQ–01

Brake pedal height (from asphalt sheet)		144.1 – 154.1 mm (5.673 – 6.067 in.)
Brake pedal freeplay	Pedal free play:	1 – 6 mm (0.04 – 0.24 in.)
Stop lamp switch clearance		0.5 – 2.5 mm (0.020 – 0.098 in.)
Pedal reserve distance from asphalt sheet at 490 N (50 kgf, 110.2 lbf)		More than 63 mm (2.48 in.)
Brake booster push rod to piston clearance (w/ SST)	Clearance:	0 mm (0 in.)
Front brake pad thickness	Standard thickness: Minimum thickness:	12.0 mm (0.472 in.) 1.0 mm (0.039 in.)
Front brake disc thickness	Standard thickness: Minimum thickness:	28.0 mm (0.433 in.) 26.0 mm (0.039 in.)
Front brake disc runout	Maximum disc runout:	0.05 mm (0.0020 in.)
Rear brake pad thickness	Standard thickness: Minimum thickness:	10.0 mm (0.472 in.) 1.0 mm (0.039 in.)
Rear disc brake thickness	Standard thickness: Minimum thickness:	12.0 mm (0.472 in.) 10.5 mm (0.413 in.)
Rear brake disc runout	Maximum disc runout:	0.15 mm (0.0059 in.)
Rear brake drum inside diameter	Standard inside diameter: Minimum inside diameter:	228.0 mm (8.976 in.) 230.6 mm (9.079 in.)
Rear drum brake shoe lining thickness	Standard thickness: Minimum thickness:	5.0 mm (0.197 in.) 1.0 mm (0.039 in.)

030FR–01

TORQUE SPECIFICATION

Part Tightened		N·m	kgf·cm	ft·lbf
Bleeder plug		8.3	85	74 in.·lbf
Brake booster clevis lock nut		26	265	19
Brake pedal sub–assy set bolt	Normal type brake pedal:	37	375	27
Stop lamp lock nut		26	265	19
Brake pedal support assy x Reinforcement		20	204	15
Brake pedal support assy x Body		13	130	9
Master cylinder piston stopper bolt	w/o VSC:	10	100	7
Brake master cylinder x Brake booster		13	130	9
Brake line union nut		15	155	11
Vacuum hose bracket set bolt		5.4	55	48 in.·lbf
Charcoal canister bracket set bolt		43	440	32
Wheel nut		103	1,050	76
Front brake cylinder mounting x Steering knuckle		107	1,090	79
Front brake cylinder x Front brake cylinder mounting		34	350	25
Front brake cylinder x Flexible hose		29.4	300	22
Rear disc brake cylinder mounting set bolt	TMC made: TMMK made:	61.8 47	630 475	46 34
Rear disc brake cylinder slide pin x Rear disc brake cylinder mounting				
	TMC made (Upper side): TMC made (Lower side): TMMK made:	34.3 39.2 43	350 400 440	25 29 32
Rear disc brake cylinder x Flexible hose		29.4	300	22
Rear drum brake wheel cylinder x Backing plate		10	100	7
Brake actuator assy x Actuator bracket		5.4	55	48 in.·lbf
Brake actuator bracket x Body		19	194	14
ABS & TRAC actuator assy x Actuator bracket		5.4	55	48 in.·lbf
ABS & TRACTION actuator bracket x Body		19	194	14
Proportioning valve assy x Body		5.4	55	48 in.·lbf
Proportioning valve assy x Brake line		15.2	155	11
Front speed sensor x Steering knuckle		8.0	82	71 in.·lbf
Front speed sensor wire harness clamp x shock absorber	Bolt A: Bolt B:	5.0 18.8	51 192	44 in.·lbf 14
Rear axle hub set bolt		80	816	59
Yawrate sensor x Body		12.5	127	9
Skid control ECU x Body		5.5	56	49 in.·lbf

PARKING BRAKE

030FS–01

SERVICE DATA

Parking brake pedal travel at 300 N (31 kgf, 68.3 lbf):		3 – 6 clicks
Parking brake lever travel at 200 N (20 kgf, 44.1 lbf):		6 – 9 clicks
Rear brake disc inside diameter	Standard inside diameter: Maximum inside diameter:	170 mm (6.69 in.) 171 mm (6.73 in.)
Parking brake shoe lining thickness	Standard thickness: Minimum thickness:	2.0 mm (0.079 in.) 1.0 mm (0.039 in.)
Parking brake shoe clearance between rear shoe and lever		Less than 0.35 mm (0.0138 in.)

030FT–01

TORQUE SPECIFICATION

Part Tightened		N·m	kgf·cm	ft·lbf
Wheel nut		103	1,050	76
Parking brake cable lock nut	Parking pedal type:	5.4	55	48 in.·lbf
	Parking lever type:	5.0	51	44 in.·lbf
Parking brake lever set bolt		12.5	128	9
Parking brake control pedal set bolt		39	398	29
Console box mounting set bolt		12.5	128	9
Parking brake cable No. 1 x Turn buckle		5.4	55	48 in.·lbf
Parking brake cable No. 3 x Backing plate		7.8	80	69 in.·lbf
Parking brake cable heart insulator set nut		5.4	55	48 in.·lbf
Parking brake cable No. 4 x Body		12.5	128	9

AUTOMATIC TRANSMISSION / TRANSAXLE

0305K–02

SERVICE DATA

U241E (2AZ–FE)		
Line pressure (Wheel locked)		
	Engine idling	
	D position	373 – 412 kPa (3.8 – 4.2 kgf·cm^2, 54 – 60 psi)
	R position	673 – 742 kPa (7.6 – 7.8 kgf·cm^2, 97 – 111 psi)
	AT stall (Throttle valve fully opened)	
	D position	931 – 1,031kPa (9.5 – 10.5 kgf·cm^2, 135 – 150 psi)
	R position	1,768 – 1,968 kPa (18.0 – 20.0 kgf·cm^2, 256 – 285 psi)
Engine stall revolution	D and R positions	2,550 ± 150 rpm
Time lag	N → D position	Less than 1.2 seconds
	N → R position	Less than 1.5 seconds
Engine idle speed (A/C OFF)	N position	650 ± 50 rpm
Drive plate runout	Max.	0.20 mm (0.0079 in.)
Torque converter runout	Max.	0.30 mm (0.0118 in.)
Differential oil seal drive in depth	LH side	0 ± 0.5 mm (0 ± 0.020 in.)
	RH side	0 ± 0.5 mm (0 ± 0.020 in.)
Shift schedule		
D position		
(Throttle valve fully opened)	1 → 2	57 – 66 km/h (35 – 41 mph)
	2 → 3	107 – 117 km/h (66 – 73 mph)
	3 → 4	171 – 188 km/h (106 – 117 mph)
	4 → 3	163 – 180 km/h (101 – 112 mph)
	3 → 2	98 – 108 km/h (61 – 67 mph)
	2 → 1	47 – 55 km/h (29 – 34 mph)
(Throttle valve fully closed)	3 → 4	40 – 47 km/h (25 – 29 mph)
	4 → 3	18 – 24 km/h (11 – 15 mph)
2 position		
(Throttle valve fully opened)	1 → 2	57 – 66 km/h (35 – 41 mph)
	3 → 2	107 – 117 km/h (66 – 73 mph)
	2 → 1	47 – 55 km/h (29 – 34 mph)
L position		
(Throttle valve fully opened)	3 → 2	107 – 117 km/h (66 – 73 mph)
	2 → 1	53 – 60 km/h (33 – 37 mph)
Lock–up point	Throttle valve opening 5 %	
O/D gear	Lock–up ON	64 – 72 km/h (40 – 45 mph)
	Lock–up OFF	62 – 70 km/h (39 – 43 mph)
U140E (1MZ–FE)		
Line pressure (Wheel locked)		
	Engine idling	
	D position	373 – 412 kPa (3.8 – 4.2 kgf·cm^2, 54 – 60 psi)
	R position	673 – 742 kPa (7.6 – 7.8 kgf·cm^2, 97 – 111 psi)
	AT stall (Throttle valve fully opened)	
	D position	931 – 1,031kPa (9.5 – 10.5 kgf·cm^2, 135 – 150 psi)
	R position	1,768 – 1,968 kPa (18.0 – 20.0 kgf·cm^2, 256 – 285 psi)
Engine stall revolution	D and R position	2,680 ± 150 rpm
Time lag	N → D position	Less than 1.2 seconds
	N → R position	Less than 1.5 seconds
Engine idle speed (A/C OFF)	N position	700 ± 50 rpm
Drive plate runout	Max.	0.20 mm (0.0079 in.)
Torque converter runout	Max.	0.30 mm (0.0118 in.)
Differential oil seal drive in depth	LH side	0 ± 0.5 mm (0 ± 0.020 in.)
	RH side	0 ± 0.5 mm (0 ± 0.020 in.)

U140E (1MZ–FE)		
Shift schedule		
D position		
(Throttle valve fully opened)	1 → 2	57 – 66 km/h (35 – 41 mph)
	2 → 3	108 – 118 km/h (67 – 73 mph)
	3 → 4	165 – 181 km/h (103 – 112 mph)
	4 → 3	154 – 171 km/h (96 – 106 mph)
	3 → 2	101 – 110km/h (63 – 68 mph)
	2 → 1	43 – 50 km/h (27 – 31 mph)
(Throttle valve fully closed)	3 → 4	38 – 45 km/h (24 – 28 mph)
	4 → 3	18 – 24 km/h (11 – 15 mph)
2 position		
(Throttle valve fully opened)	1 → 2	57 – 66 km/h (35 – 41 mph)
	3 → 2	111 – 121 km/h (69 – 75 mph)
	2 → 1	43 – 50 km/h (27 – 31 mph)
L position		
(Throttle valve fully opened)	3 → 2	111 – 121 km/h (69 – 75 mph)
	2 → 1	50 – 58 km/h (31 – 36 mph)
Lock–up point	Throttle valve opening 5 %	
O/D gear	Lock–up ON	55 – 63 km/h (34 – 39 mph)
	Lock–up OFF	49 – 56 km/h (30 – 35 mph)

0305L–02

TORQUE SPECIFICATION

Part Tightened		N·m	kgf·cm	ft·lbf
Park/neutral position switch	Bolt	6.9	70	61 in.·lbf
	Nut	5.4	55	48 in.·lbf
Control shaft lever x Control shaft		12.7	130	9
Shift control cable x Control shaft lever		14.7	150	10
1MZ–FE:				
Transaxle housing x Engine block	A bolt	64	650	47
	B bolt	44	449	32
2AZ–FE:				
Transaxle housing x Engine block	A bolt	64	650	47
	B bolt	46	470	34
	C bolt	44	449	32
Torque converter clutch x Drive plate		41	418	30
Engine mounting bracket FR x Transaxle		64	653	47
Oil filler tube x Transaxle		5.5	56	49 in.·lbf
Control cable bracket x Transaxle		11.8	122	9
Oil cooler tube clamp x Control cable bracket		5.4	55	48 in.·lbf
Oil cooler inlet tube x Transaxle		34.3	350	25
Oil cooler outlet tube x Transaxle		34.3	350	25
Starter x Transaxle		37	377	27
Wire harness x Transaxle		25.5	260	19
Control cable clamp x Transaxle		11.8	122	9
Wire harness clamp x Transaxle		8.4	86	74 in.·lbf
Speed sensor x Transaxle		11.3	115	8
Revolution sensor x Transaxle		11.3	115	8
Drain plug x Oil pan		49	500	36
Transmission wire x Transaxle		5.4	55	48 in.·lbf
ATF temperature sensor x Valve body		6.6	67	58 in.·lbf
Oil pan x Transaxle		7.8	80	69 in.·lbf
Solenoid valve x Valve body	A bolt	6.6	67	58 in.·lbf
	B bolt	10.8	110	8
Valve body x transaxle		10.8	110	8
Oil strainer x Valve body		10.8	110	8
Floor shift assy x Body		11.8	122	9
Control cable x Body		4.9	50	43 in.·lbf

MANUAL TRANSMISSION / TRANSAXLE

030FO–01

SERVICE DATA

Transmission case oil seal drive in depth		3.5 ± 0.5 mm (0.138 ± 0.020 in.)
Front transaxle case cover oil seal drive in depth		0 ± 0.5 mm (0 ± 0.020 in.)
Manual transaxle assy		
5th gear thrust clearance	Standard clearance	0.10 – 0.65 mm (0.0039 – 0.0256 in.)
5th gear radial clearance	Standard clearance	0.009 – 0.050 mm (0.0004 – 0.0020 in.)
Reverse idler gear sub–assy inside diameter	Standard inside diameter Maximum inside diameter	20.056 – 20.074 mm (0.7896 – 0.7903 in.) 20.074 mm (0.7903 in.)
Reverse idler gear shaft outer diameter	Standard outer diameter Minimum outer diameter	19.984 – 20.000 mm (0.7868 – 0.7874 in.) 19.984 mm (0.7868 in.)
Transmission hub sleeve No.3 groove – thickness of the claw part on gear shift fork No.3	Standard clearance	0.15–0.35 mm (0.0059 – 0.0138 in.)
5th gear inside diameter	Standard inside diameter Maximum inside diameter	34.981 – 34.997 mm (1.3772 – 1.3778 in.) 34.997 mm (1.3778 in.)
Control shaft cover bimetal formed bush clearance		0.081 – 0.149 mm (0.0032 – 0.0059 in.)
Front transaxle case cover oil seal driven in depth		0 ± 0.5 mm (0 ± 0.020 in.)
Transmission case oil seal driven in depth		3.5 ± 0.5 mm (0.138 ± 0.020 in.)
Output shaft rear bearing clearance		3.8 – 4.4 mm (0.150 – 0.173 in.)
Output shaft bearing preload	New bearing Used bearing	0.8 – 1.6 N·m (8.16 – 16.32 kgf·cm, 7.1 – 14.2 in.·lbf) 0.5 – 1.0 N·m (5.10 – 10.20 kgf·cm, 4.4 – 8.9 in.·lbf)
Output shaft rear bearing shim thickness	0 1 2 3 4 5 6 7 8 9 A B C D E F G H J K L M N P Q	1.30 mm (0.0512 in.) 1.35 mm (0.0531 in.) 1.40 mm (0.0551 in.) 1.45 mm (0.0571 in.) 1.50 mm (0.0591 in.) 1.55 mm (0.0610 in.) 1.60 mm (0.0630 in.) 1.65 mm (0.0650 in.) 1.70 mm (0.0669 in.) 1.75 mm (0.0689 in.) 1.80 mm (0.0709 in.) 1.85 mm (0.0728 in.) 1.90 mm (0.0748 in.) 1.95 mm (0.0768 in.) 2.00 mm (0.0787 in.) 2.05 mm (0.0807 in.) 2.10 mm (0.0827 in.) 2.15 mm (0.0846 in.) 2.20 mm (0.0866 in.) 2.25 mm (0.0886 in.) 2.30 mm (0.0906 in.) 2.35 mm (0.0925 in.) 2.40 mm (0.0945 in.) 2.45 mm (0.0965 in.) 2.50 mm (0.0984 in.)
Front differential case tapered roller bearing preload	New bearing Used bearing	0.8 – 1.6 N·m (8.16 – 16.32 kgf·cm, 7.1 – 14.2 in.·lbf) 0.5 – 1.0 N·m (5.10 – 10.20 kgf·cm, 4.4 – 8.9 in.·lbf)

Transmission case oil seal drive in depth		3.5 ± 0.5 mm (0.138 ± 0.020 in.)
Front differential case shim RR thickness	0	2.00 mm (0.0787 in.)
	1	2.05 mm (0.0807 in.)
	2	2.10 mm (0.0827 in.)
	3	2.15 mm (0.0846 in.)
	4	2.20 mm (0.0866 in.)
	5	2.25 mm (0.0886 in.)
	6	2.30 mm (0.0906 in.)
	7	2.35 mm (0.0925 in.)
	8	2.40 mm (0.0945 in.)
	9	2.45 mm (0.0965 in.)
	A	2.50 mm (0.0984 in.)
	B	2.55 mm (0.1004 in.)
	C	2.60 mm (0.1024 in.)
	D	2.65 mm (0.1043 in.)
	E	2.70 mm (0.1063 in.)
	F	2.75 mm (0.1083 in.)
	G	2.80 mm (0.1102 in.)
	H	2.85 mm (0.1122 in.)
Front differential case oil seal clearance		1 – 2 mm (0.0394 –0.0787 in.)
Input shaft front bearing clearance		4.28 – 4.60 mm (0.1685 – 0.1811 in.)
Reverse restrict pin clearance		12.5 – 13.5 mm (0.492 – 0.531 in.)
Transmission clutch hub No.3 snap ring clearance		0.1 mm or less (0.0039 in. or less)
Transmission clutch hub No.3 snap ring thickness	a	1.75 – 1.80 mm (0.0689 – 0.0709 in.)
	b	1.80 – 1.85 mm (0.0709 – 0.0728 in.)
	c	1.85 – 1.90 mm (0.0728 – 0.0748 in.)
	d	1.90 – 1.95 mm (0.0748 – 0.0768 in.)
	e	1.95 – 2.00 mm (0.0768 – 0.0787 in.)
	f	2.00 – 2.05 mm (0.0787 – 0.0807 in.)
	g	2.05 – 2.10 mm (0.0807 – 0.0827 in.)
	h	2.10 – 2.15 mm (0.0827 – 0.0846 in.)
	j	2.15 – 2.20 mm (0.0846 – 0.0866 in.)
5th gear radial clearance	Standard clearance	0.009 – 0.050 mm (0.0004 – 0.0020 in.)
5th gear thrust clearance	Standard clearance	0.10 – 0.65 mm (0.0039 – 0.0260 in.)
Input shaft assy		
4th gear thrust clearance	Standard clearance	0.10 – 0.57 mm (0.0039– 0.0224 in.)
3rd gear thrust clearance	Standard clearance	0.10 – 0.35 mm (0.0039 – 0.0138 in.)
4th gear radial clearance	KOYO made	0.009 – 0.053 mm (0.0004 – 0.0021 in.)
	NSK made	0.009 – 0.051 mm (0.0004 – 0.0020 in.)
3rd gear radial clearance	KOYO made	0.009 – 0.053 mm (0.0004 – 0.0021 in.)
	NSK made	0.009 – 0.051 mm (0.0004 – 0.0020 in.)
Input shaft run out	Maximum run out:	0.03 mm (0.0012 in.)
Input shaft standard outer diameter	A	35.984 – 36.000 mm (1.4167 – 1.4173 in.)
	B	35.984 – 36.000 mm (1.4167 – 1.4173 in.)
	C	27.957 – 27.972 mm (1.1007 – 1.1013 in.)
Input shaft minimum outer diameter	A	35.984 mm (1.4167 in.)
	B	35.984 mm (1.4167 in.)
	C	27.957 mm (1.1007 in.)
4th gear inside diameter	Standard inside diameter	42.09 – 42.025 mm (1.6539 – 1.6545 in.)
	Maximum inside diameter	42.025 mm (1.6545 in.)
3rd gear inside diameter	Standard inside diameter	43.009 – 43.025 mm (1.6933 – 1.6939 in.)
	Maximum inside diameter	43.025 mm (1.6939 in.)
Between the 4th gear spline end and synchronizer outer ring back clearance		0.75 – 1.65 mm (0.0295 – 0.0650 in.)
Between the 3rd gear spline end and synchronizer outer ring back clearance		0.65 – 1.75 mm (0.0256 – 0.0689 in.)
Transmission hub sleeve No.3 groove – thickness of the claw part on gear shift fork No.1	Standard clearance	0.15 – 0.35 mm (0.0059 – 0.0138 in.)
Transmission clutch hub No.2 snap ring clearance	Standard clearance	0.1 mm or less (0.0039 in. or less)

Transmission case oil seal drive in depth		3.5 ± 0.5 mm (0.138 ± 0.020 in.)
Transmission clutch hub No.2 snap ring thickness	H	2.30 – 2.35 mm (0.0906 – 0.0925 in.)
	J	2.35 – 2.40 mm (0.0925 – 0.0945 in.)
	K	2.40 – 2.45 mm (0.0945 – 0.0965 in.)
	L	2.45 – 2.50 mm (0.0965 – 0.0984 in.)
	M	2.50 – 2.55 mm (0.0984 – 0.1004 in.)
	N	2.55 – 2.60 mm (0.1004 – 0.1024 in.)
	P	2.60 – 2.65 mm (0.1024 – 0.1043 in.)
Input shaft rear radial ball bearing snap ring clearance	Standard clearance	0.1 mm or less (0.0039 in. or less)
Input shaft rear radial ball bearing snap ring thickness	1	2.35 – 2.40 mm (0.0925 – 0.0945 in.)
	2	2.40 – 2.45 mm (0.0945 – 0.0965 in.)
	3	2.45 – 2.50 mm (0.0965 – 0.0984 in.)
	4	2.50 – 2.55 mm (0.0984 – 0.1004 in.)
	5	2.55 – 2.60 mm (0.1004 – 0.1024 in.)
	6	2.60 – 2.65 mm (0.1024 – 0.1043 in.)
	7	2.65 – 2.70 mm (0.1043 – 0.1063 in.)
	8	2.70 – 2.75 mm (0.1063 – 0.1083 in.)
3rd gear radial clearance	KOYO made	0.009 – 0.053 mm (0.0004 – 0.0021 in.)
	NSK made	0.009 – 0.051 mm (0.0004 – 0.0020 in.)
4th gear radial clearance	KOYO made	0.009 – 0.053 mm (0.0004 – 0.0021 in.)
	NSK made	0.009 – 0.051 mm (0.0004 – 0.0020 in.)
3rd gear thrust clearance	Standard clearance	0.10 – 0.35 mm (0.0039 – 0.0138 in.)
4th gear thrust clearance	Standard clearance	0.10 – 0.57 mm (0.0039– 0.0224 in.)
Output shaft assy		
1st gear thrust clearance	Standard clearance	0.25 – 0.40 mm (0.0098 – 0.0157 in.)
2nd gear thrust clearance	Standard clearance	0.10 – 0.35 mm (0.0039 – 0.0138 in.)
1st gear radial clearance	KOYO made	0.009 – 0.053 mm (0.0004 – 0.0021 in.)
	NSK made	0.009 – 0.051 mm (0.0004 – 0.0020 in.)
2nd gear radial clearance	KOYO made	0.009 – 0.053 mm (0.0004 – 0.0021 in.)
	NSK made	0.009 – 0.051 mm (0.0004 – 0.0020 in.)
Output shaft run out	Maximum run out	0.03 mm (0.0012 in.)
Output shaft standard outer diameter	A	37.610 – 37.626 mm (1.4807 – 1.4813 in.)
	B	34.802 – 34.512 mm (1.3702 – 1.3587 in.)
Output shaft minimum outer diameter	A	37.610 mm (1.4807 in.)
	B	34.802 mm (1.3702 in.)
2nd gear inside diameter	Standard inside diameter	50.009 – 50.025 mm (1.9689 – 1.9695 in.)
	Maximum inside diameter	50.025 mm (1.9695 in.)
1st gear inside diameter	Standard inside diameter	51.009 – 51.025 (2.0082 – 2.0089 in.)
	Maximum inside diameter	51.025 mm (2.0089 in.)
Between the 2nd gear while and synchronizer ring No.2 back clearance		0.70 – 1.45 mm (0.0276 – 0.0571 in.)
Between the 1st gear while and synchronizer ring set No.1 back clearance		0.70 – 1.45 mm (0.0276 – 0.0571 in.)
Reverse gear groove – thickness of the claw part on gear shift fork No.1 clearance	Standard clearance	0.15 – 0.35 mm (0.0059 – 0.0138 in.)
2nd gear radial clearance	KOYO made	0.009 – 0.053 mm (0.0004 – 0.0021 in.)
	NSK made	0.009 – 0.051 mm (0.0004 – 0.0020 in.)
1st gear radial clearance	KOYO made	0.009 – 0.053 mm (0.0004 – 0.0021 in.)
	NSK made	0.009 – 0.051 mm (0.0004 – 0.0020 in.)
2nd gear thrust clearance	Standard clearance	0.10 – 0.35 mm (0.0039 – 0.0138 in.)
1st gear thrust clearance	Standard clearance	0.25 – 0.40 mm (0.0098 – 0.0157 in.)
Differential case assy		
Front differential side gear backlash	Standard backlash	0.05 – 0.20 mm (0.0020 – 0.0079 in.)
Front differential pinion thrust washer thickness	Minimum thickness	0.9 mm (0.035 in.)
Front differential pinion shaft No.1 thickness	Minimum thickness	17.975 mm (0.70768 in.)
Front differential side gear backlash	Standard backlash	0.05 – 0.20 mm (0.0020 – 0.0079 in.)

Transmission case oil seal drive in depth		3.5 ± 0.5 mm (0.138 ± 0.020 in.)
Front differential side gear thrust washer thickness	1 2 3 4	1.00 mm (0.0394 in.) 1.10 mm (0.0433 in.) 1.20 mm (0.0472 in.) 1.30 mm (0.0512 in.)
Shift & select lever shaft assy		
Control shaft cover bimetal formed bush drive in depth		0 ± 0.25 mm (0 ± 0. 010 in.)
Control shaft cover oil seal drive in depth		28.5 ± 0.50 mm (1.122 ± 0. 020 in.)
Shift lever slotted pin clearance to the shift lever inner assy		–0.5 – 0.5 mm (– 0.0197 – 0.0197 in.)
Shift lever slotted pin clearance to the shift lever inner No.2		5.8 – 6.8 mm (0.228 – 0.268 in.)

030FP–01

TORQUE SPECIFICATION

Part Tightened		N·m	kgf·cm	ft·lbf
Hub nut		103	1,050	76
Floor shift lever assembly x Body		12	122	9
Floor shift cable transmission control shift clamp x Body		5.0	51	44 in.·lbf
Floor shift cable transmission control shift retainer x Body		5.0	51	44 in.·lbf
Gear shift fork No. 1 set bolt		24	240	17
Reverse shift arm bracket assy x Manual transaxle case		17	175	13
Reverse restrict pin plug		13	133	9.6
Oil receiver pipe No. 1 x Manual transmission case		17	175	13
Clutch tube bracket set bolt		17	173	13
Reverse idler gear shaft bolt		30	306	22
Gear shift fork No. 3 shift fork bolt		24	244	17
Manual transmission output shaft rear set nut		123	1,250	90
Drain plug sub–assy		49	500	36
Manual transmission filler plug		49	500	36
Back up lamp switch assy x Manual transmission case		40	410	30
Manual transmission breather plug x Manual transmission case		49	500	36
Lock ball assy No. 1 x Manual transmission case		29	300	22
Control shaft cover set bolt		20	200	14
Control shift lever x Shift & select lever shaft		6.4	65	57 in.·lbf
Selecting ballcrank assy x Manual transmission case		20	200	14
Release fork support x Manual transaxle case		47.1	480	35
Manual transaxle x Engine	Bolt A	64	650	47
	Bolt B	46	470	34
	Bolt C	44	449	32
Transverse engine engine mounting insulator x Manual transaxle		64	653	47
Exhaust pipe support bracket No. 1 x Manual transaxle		8.0	82	71 in.·lbf
Manual transmission case protector x Manual transaxle		18	184	13
Transverse engine engine mounting bracket x Manual transaxle		64	653	47
Starter assy x Manual transaxle		37	377	27
Wire harness clamp x Manual transaxle		8.0	82	71 in.·lbf
Engine wire No. 3 x Manual transaxle		25.5	260	19
Transmission case x Manual transaxle case		29	296	21
Manual transaxle case x Transmission case		30	306	22
Bearing retainer RR x Transmission case		42	428	31
Manual transaxle case receiver x Manual transaxle case		7	71	62 in.·lbf
Gear shift head No.1 x Gear shift fork shaft No.2		24	245	18
Gear shift fork No.1 x Gear shift fork shaft No.1		24	245	18
Reverse shift arm bracket x Manual transaxle case		17	173	13
Reverse restrict pin plug x Transmission case		13	133	9.6
Oil receiver pipe No.1 x Transmission case		17	173	13
Oil receiver pipe No.2 x Transmission case		17	173	13
Clutch tube bracket x Transmission case		17	173	13
Reverse idler gear shaft bolt x Transmission case		30	306	22
Transmission clutch hub No.3 gear shift fork shaft x input shaft		24	245	18
Manual transmission output rear set nat. x Output shaft		123	1,254	91
Drain (MTM) plug sub–assy x Transmission case		49	500	36
Manual transmission filler plug x Transmission case		49	500	36
Back up lamp switch assy x Transmission case		40	408	30
Manual transmission breather plug x Transmission case		49	500	36
Lock ball assy No.1 x Transmission case		29	296	21

Part Tightened	N·m	kgf·cm	ft·lbf
Control shift cover x Transmission case	20	204	15
Control shift lever x Shift & select lever assy	6.4	65	57 in.·lbf
Selecting bell crank assy x Transmission case	20	204	15
Selecting bellcrank support x Selecting bellcrank No.2 plate washer	12	122	9
Release fork support x Manual transaxle case	47.1	480	35
Front differential ring gear x Front differential case	106	1,081	78

CLUTCH

030EF–01

SERVICE DATA

Pedal height from asphalt sheet		159.0 – 169.0 mm (6.260 – 6.654 in.)
Clutch pedal free play		5.0 – 15.0 mm (0.197 – 0591 in.)
Clutch pedal push rod play at pedal top		1.0 – 5.0 mm (0.039 – 0.197 in.)
Slotted spring pin protrusion	Maximum	1.5 – 3.5 mm (0.059 – 0.138 in.)
Disc rivet head depth	Maximum	0.3 mm (0.012 in.)
Disc runout	Minimum	0.8 mm (0.031 in.)
Diaphragm spring finger wear	Maximum depth: Maximum width:	0.5 mm (0.020 in.) 6.0 mm (0.236 in.)
Flywheel runout	Maximum	0.1 mm (0.004 in.)
Diaphragm spring finger wear	Maximum depth	0.5 mm (0.020 in.)
Clutch release point from pedal full stroke end position		25 mm (0.98 in.) or more

030EG–01

TORQUE SPECIFICATION

Part Tightened	N·m	kgf·cm	ft·lbf
Clutch pedal sub–assy x Clutch pedal support	36.8	375	27
Clutch pedal support set bolt x Body	19.1	195	14
Cylinder push rod clevis lock nut	25.5	260	19
Clutch master cylinder assy x Clutch pedal support	11.8	120	9
Clutch master cylinder assy x Flexible hose tube	15.2	155	11
Master cylinder bleeder plug	8.3	85	73 in.·lbf
Release cylinder bleeder plug	8.3	85	73 in.·lbf
Clutch release cylinder assy x Transaxle housing	11.8	120	9
Clutch release cylinder assy x flexible hose tube	15.2	155	11
Clutch cover assy x Flywheel	19.1	195	14
Release fork support x Transaxle assy	47.1	480	35
Clutch start switch assy set nut	15.68	160	12

STEERING COLUMN

0304Y–02

SERVICE DATA

Steering wheel freeplay	Maximum	30 mm (1.18 in.)
Steering main shaft length	Standard length	474.5 ± 1 mm (18.681 ± 0.039 in.)

0304Z–02

TORQUE SPECIFICATION

Part tightened	N·m	kgf·cm	ft·lbf
Tie rod end lock nut	74	750	54
Universal joint assy x Main shaft assy	35.3	360	26
Steering column assembly set bolt and nut	20.6	210	15
Intermediate shaft sub–assy x Universal joint assembly	35.3	360	26
Intermediate shaft sub–assy x Control valve shaft	35.3	360	26
Steering wheel set nut	50	510	37
Steering wheel pad set screw (Torx screw)	8.8	90	78 in.·lbf

POWER STEERING

030EH–01

SERVICE DATA

POWER STEERING FLUID		
Fluid level rise	Maximum	5 mm (0.20 in.)
Fluid pressure at idle speed with valve closed		7,800 – 8,300 kPa (80 – 85 kgf/cm^2, 1,138 – 1,209 psi)
STEERING WHEEL		
Steering effort at idle speed	(Reference)	6 N·m (60 kgf·cm, 53 in.·lbf)
POWER STEERING VANE PUMP (2AZ–FE)		
Vane pump rotating torque		0.27 N·m (2.8 kgf·cm, 2.4 in.·lbf) or less
Vane pump shaft and vane pump housing seal clearance	STD Maximum	0.009 – 0.031 mm (0.00035 – 0.00122 in.) 0.07 mm (0.0028 in.)
Vane plate height	Minimum	7.7 mm (0.303 in.)
Vane plate thickness	Minimum	1.408 mm (0.05543 in.)
Vane plate length	Minimum	11.993 mm (0.47216 in.)
Vane plate and vane rotor groove clearance	Maximum	0.03 mm (0.0012 in.)
Spring free length	Minimum	35.8 mm (1.409 in.)
POWER STEERING VANE PUMP (1MZ–FE)		
Vane pump rotating torque		0.27 N·m (2.8 kgf·cm, 2.4 in.·lbf) or less
Vane pump shaft and vane pump housing oil clearance	STD Maximum	0.027 – 0.054 mm (0.00106 – 0.00213 in.) 0.07 mm (0.0028 in.)
Vane plate height	Minimum	8.7 mm (0.343 in.)
Vane plate thickness	Minimum	1.4 mm (0.055 in.)
Vane plate length	Minimum	14.991 mm (0.59020 in.)
Clearance between the rotor groove and plate	Maximum	0.03 mm (0.0012 in.)
Spring free length	Minimum	32.24 mm (1.2693 in.)
POWER STEERING GEAR		
Steering rack runout	Maximum	0.3 mm (0.012 in.)
Total preload (Tie rod rotating torque)	(Turning)	0.83 – 3.43 N·m (7.3 – 30.4 kgf·cm, 7.3 – 30.4 in.·lbf)
Total preload (Control valve rotating torque)	(Turning)	1.2 – 1.5 N·m (12.2 – 15.3 kgf·cm, 10.6 – 13.3 in.·lbf)

030EI–01

TORQUE SPECIFICATION

Part tightened		N·m	kgf·cm	ft·lbf
POWER STEERING VANE PUMP (2AZ–FE)				
Vane pump housing rear x Vane pump housing front		22	224	16
Pressure port union		69	704	51
Power steering suction port union set bolt		12	122	9
Power steering oil pressure switch		21	214	15
Pressure feed tube assy x Vane pump assy		51.5	525	38
Vane pump assy set bolt	Bolt A Bolt B	30 (43) 43	306 (440) 440	22 (32) 32
POWER STEERING VANE PUMP (1MZ–FE)				
Vane pump housing rear x Vane pump housing front		24	245	18
Pressure port union		83	846	61
Power steering suction port union set bolt		13	133	10
Pump bracket front x Vane pump bracket rear	(TYPE A VANE PUMP) (TYPE B VANE PUMP)	43 44	438 449	32 32
Vane pump pulley set nut	(TYPE A VANE PUMP)	44	449	32
Vane pump assy set bolt		43	438	32
Pressure feed tube assy x Vane pump assy		51.5	525	38
Power steering oil pressure switch		21	214	15
POWER STEERING GEAR				
Control valve housing set bolt		21	214	15
Control valve shaft lock nut		24.5	250	18
Rack housing cap		58.5	597	43
Rack guide spring cap nut		48 (68.5)	489 (699)	35 (51)
Power steering rack x Steering rack end sub–assy		58.5 (83.5)	597 (851)	43 (62)
Tie rod assy lock nut		74	755	55
Turn pressure tube union nut		11.5 (12.5)	117 (127)	8 (9)
Rack & pinion power steering gear assy set bolt and nut		70	714	52
Pressure feed and return tubes x Control valve housing		22.5 (24.5)	229 (250)	17 (18)
Pressure feed tube clamp set bolt		9.8	100	86 in.·lbf
Return tube assy clamp set nut		9.8	100	86 in.·lbf
Front stabilizer bracket		19	194	14
Stabilizer link assy set nut		74	755	55
Tie rod assy set nut		49	500	36
Intermediate shaft sub–assy x Control valve		35.3	360	26
Hub nut		103	1,050	76

( ): For use without SST

HEATER & AIR CONDITIONER

030FJ–01

SERVICE DATA

Refrigerant charge volume		Standard: 550 ± 50 g (19.37 ± 1. 76 oz.)
V (cooler compressor to crankshaft pulley)belt No. 1 tension	New belt: Used belt:	165 ± 27 lbf 88 ± 22 lbf
Magnetic clutch clearance (1MZ–FE)		0.35 – 0.60 mm (0.014 – 0.024 in.)
Magnetic clutch clearance (2AZ–FE)		0.35 – 0.60 mm (0.014 – 0.024 in.)

030FK–01

TORQUE SPECIFICATION

Part Tightened	N·m	kgf·cm	ft·lbf
V (COOLER COMPRESSOR TO CRANKSHAFT PULLEY) BELT NO.1			
Generator installation bolt Bolt A	17.5	178	12
Generator installation bolt Bolt C	58	591	43
AIR CONDITIONING RADIATOR ASSY			
Air conditioning tube assy x Cooler evaporator sub–assy No. 1	3.5	35	30 in.·lbf
Air conditioning radiator assy x Body	1.5	15	12 in.·lbf
Blower assy x Body	1.5	15	12 in.·lbf
Junction block x Instrument panel reinforcement	8.4	85	73 in.·lbf
Instrument panel brace sub–assy No. 1 x Instrument panel reinforcement Screw	9.8	100	87 in.·lbf
COOLER COMPRESSOR ASSY (1MZ–FE)			
Magnet clutch hub x Cooler compressor assy	18	184	13
Compressor and magnet clutch x Engine Bolt A, B, C, F Nut D	25	250	18
Compressor and magnet clutch x Engine Bolt E	18	184	13
Cooler refrigerant suction hose No.1 x Compressor and magnet clutch	9.8	100	87 in.·lbf
Cooler refrigerant discharge hose No.1 x Compressor and magnet clutch	9.8	100	87 in.·lbf
COOLER COMPRESSOR ASSY (2AZ–FE)			
Magnet clutch hub x Cooler compressor assy	18	184	13
Compressor and magnet clutch x Engine	25	250	18
Cooler refrigerant suction hose No.1 x Compressor and magnet clutch	9.8	100	87 in.·lbf
Cooler refrigerant discharge hose No.1 x Compressor and magnet clutch	9.8	100	87 in.·lbf
COOLER CONDENSER ASSY			
Cap x Cooler condenser assy	12	125	9
Cooler condenser assy x Body	9.8	100	85 in.·lbf
Cooler refrigerant liquid pipe A x Cooler condenser assy	5.4	55	47 in.·lbf
Cooler refrigerant discharge hose No. 1 x Cooler condenser assy	5.4	55	47 in.·lbf

SUPPLEMENTAL RESTRAINT SYSTEM

030FN–01

TORQUE SPECIFICATION

Part Tightened		N·m	kgf·cm	ft·lbf
Horn button assy x Steering wheel assy		8.8	90	78 in.·lbf
Steering wheel assy x Steering column assy		50	510	37
Instr pnl pass l/door airbag assy x Instrument panel reinforcement		20	200	14
Curtain shield airbag assy x Body		9.8	100	87 in.·lbf
Airbag sensor assy center x Body		17.5	178	13
Airbag front sensor set bolt		17.5	178	13
Side airbag sensor assy LH x Body		20	200	14
Airbag sensor rear LH x Body	Property class 8T: Property class 6T:	20 17.5	200 178	14 13
Seat position airbag sensor x Front seat		8.0	82	71 in.·lbf

WIPER & WASHER

TORQUE SPECIFICATION

030FM–01

Part Tightened	N·m	kgf·cm	ft·lbf
Wind shield wiper motor assy × Wiper link assy	5.4	55	48 in.·lbf
Wiper link assy × Body	7.0	71	62 in.·lbf
FR Wiper arm RH × Wiper link	20.1	205	15
FR Wiper arm LH × Wiper link	20.1	205	15

INSTRUMENT PANEL/METER

030FF–01

TORQUE SPECIFICATION

Part Tightened	N·m	kgf·cm	ft·lbf
Instrument panel reinforce × Body Bolt <E>	20	200	14
Front pillar garnish × Body	7.5 – 20	76 – 204	66 – 117 in.·lbf

ENGINE HOOD/DOOR

TORQUE SPECIFICATION

030FL–01

Part Tightened	N·m	kgf·cm	ft·lbf
HOOD	–	–	–
Hood x Hood hinge	26	265	19
FRONT DOOR	–	–	–
Door hinge x Body	26	265	19
Door hinge x Door panel	26	265	19
Door lock striker x Body	23	235	17
REAR DOOR	–	–	–
Door hinge x Body	26	265	19
Door hinge x Door panel	26	265	19
Door lock striker x Body	23	235	17

SFI SYSTEM (2AZ–FE)

10068–01

ON–VEHICLE INSPECTION

1. INSPECTION THROTTLE BODY

(a) Inspect the throttle control motor for operating sound.
  (1) Turn the ignition switch ON.
  (2) When turning the accelerator pedal position sensor lever, check the running sound of the motor. Also, check that there is no friction sound.

(b) Inspect the throttle position sensor.
  (1) Connect the hand–held tester or OBD II scan tool to the DLC3.
  (2) Turn the ignition switch ON.
  (3) Check that the check engine warning light does not light up.
  (4) Check that the throttle valve opening percentage (THROTTLE POS) of the CURRENT DATA shown the standard value.

  Standard throttle valve opening percentage:
  60 % or more

2. INSPECT ACCELERATOR PEDAL POSITION SENSOR

(a) When turning ignition switch ON, check that the voltage of the throttle position sensor of the CURRENT DATA shown the standard value.

  Standard voltage: 0.6 – 1.0 V

3. INSPECT CAMSHAFT TIMING OIL CONTROL VALVE ASSY

(a) Connect the hand–held tester or OBD II scan tool to the DLC3.
(b) Turn the ignition switch ON.
(c) Start the engine and warmed it up.
(d) Connect the hand–held tester and select the VVT from the ACTIVE TEST menu.
(e) Check the engine speed when the OCV is operated by the hand–held tester.

  Standard:
  VVT system is OFF (OCV is OFF): Normal engine speed
  VVT system is ON (OCV is ON): Rough idle or engine stalled

10069–01

INSPECTION

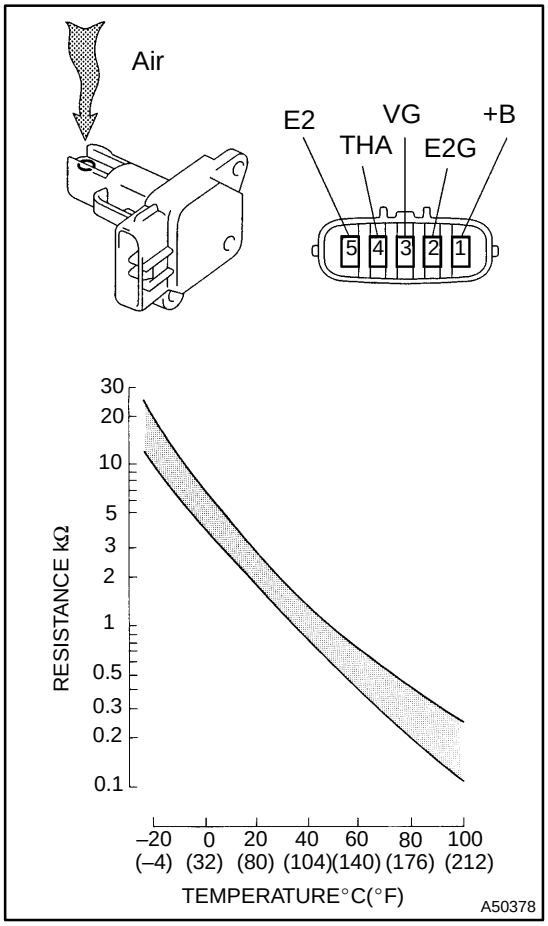

1. INTAKE AIR FLOW METER SUB–ASSY

(a) Output voltage inspection.
  (1) Apply battery voltage across terminals 1 (+B) and 2 (E2G).
  (2) Using a voltmeter, connect the positive (+) tester probe to terminal VG, and negative (–) tester probe to terminal E2G.
  (3) Blow air into the MAF meter, and check that the voltage fluctuates.

(b) Resistance inspection.
  (1) Using an ohmmeter, measure the resistance between terminals 4 (THA) and 5 (E2).

Resistance:
–20°C (–4°F) 13.6 – 18.4 kΩ
20°C (68°F) 2.21 – 2.69 kΩ
60°C (140°F) 0.493 – 0.667 kΩ

2. CAMSHAFT TIMING OIL CONTROL VALVE ASSY

(a) Resistance inspection.
  (1) Using an ohmmeter, measure the resistance between the terminals.

Resistance: 6.9 – 7.9 Ω at 20 °C (68 °F)

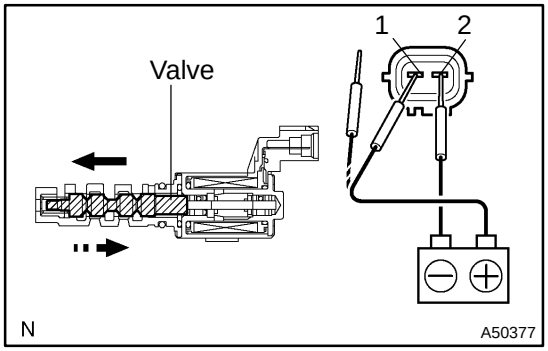

(b) Movement inspection.
  (1) Connect the positive (+) lead from the battery to terminal 1 and negative (–) lead to terminal 2, and check the movement of the valve.

NOTICE:
Confirm the valve does not adhere.
HINT:
Bad returning of the valve by entrance of foreign objects causes subtle pressure leak to the advanced direction. Then, DTC can be detected.

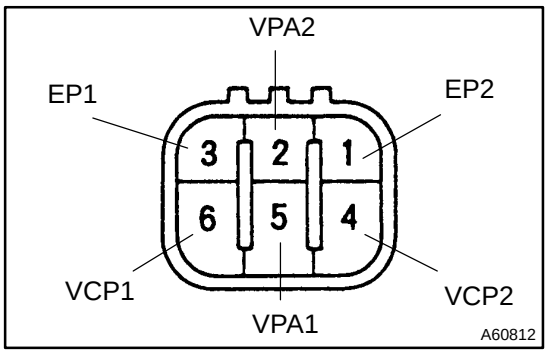

3. ACCELERATOR PEDAL ASSY

(a) Resistance inspection
(1) Using an ohmmeter, measure the resistance between the terminals.

Resistance:

Terminal No.	Resistance
2 (VPA2) ⇔ 3 (EP1)	5.0 kΩ or less
5 (VPA1) ⇔ 1 (EP2)	5.0 kΩ or less
6 (VCP1) ⇔ 3 (EP1)	2.25 – 4.75 kΩ
4 (VCP2) ⇔ 1 (EP2)	2.25 – 4.75 kΩ

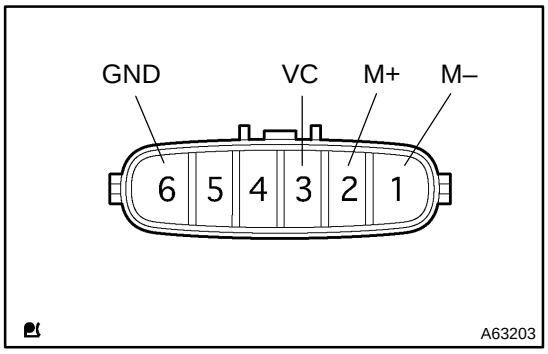

4. THROTTLE BODY ASSY

(a) Using an ohmmeter, measure the resistance between the terminals.

Resistance:

Terminal No.	Resistance
3 (VC) ⇔ 6 (GND)	1.2 – 3.2 kΩ (20°C)
2 (M+) ⇔ 1 (M–)	0.3 – 100 kΩ (20°C)

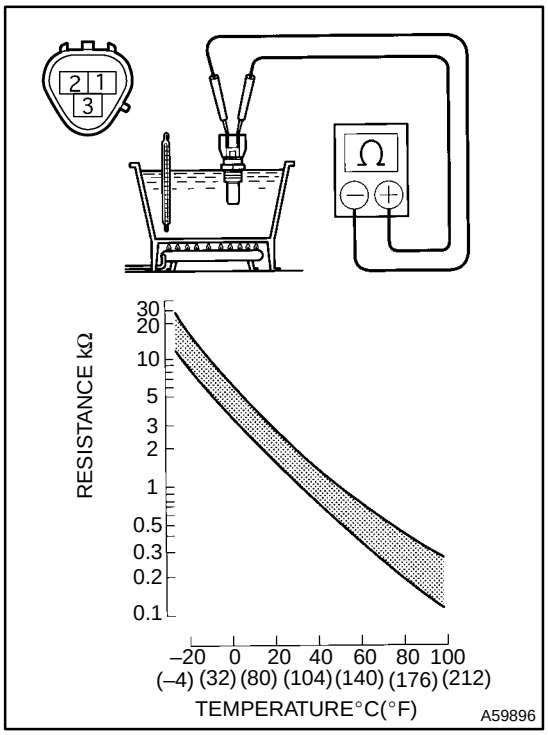

5. E.F.I. ENGINE COOLANT TEMPERATURE SENSOR

(a) Resistance inspection.
(1) Using an ohmmeter, measure the resistance between terminal 1 and 2.

Resistance:
Approx. 20°C (68°F) 2.29 – 2.6 kΩ
Approx. 80°C (176°F) 0.300 – 0.327 kΩ

NOTICE:
In case of checking the water temperature sensor in the water, be careful not to allow water to go into the terminals, and after checking, wipe out the sensor.

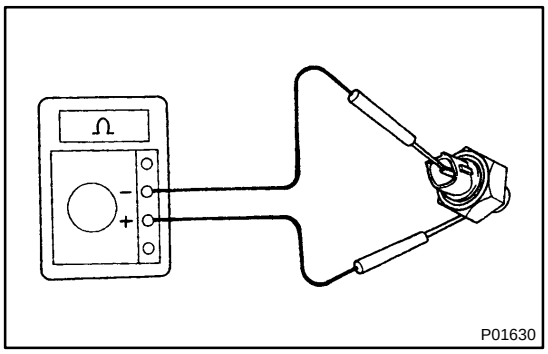

6. KNOCK CONTROL SENSOR

(a) Continuity inspection.
(1) Using an ohmmeter, check that no continuity exists between the terminal and body.

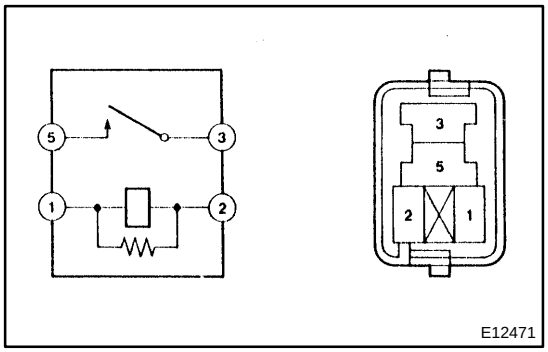

7. E.F.I. CIRCUIT OPENING RELAY ASSY
E.F.I ECU RELAY

(a) Continuity inspection.
(1) Using an ohmmeter, check that continuity exists between each terminal.

Specified condition:
Between terminal 1 and 2 Continuity
Between terminal 3 and 5 No continuity

(2) Using an ohmmeter, check that continuity exists between terminals 3 and 5 when the battery voltage is applied across terminals 1 and 2.

THROTTLE BODY ASSY (2AZ–FE)

COMPONENTS

1006A–01

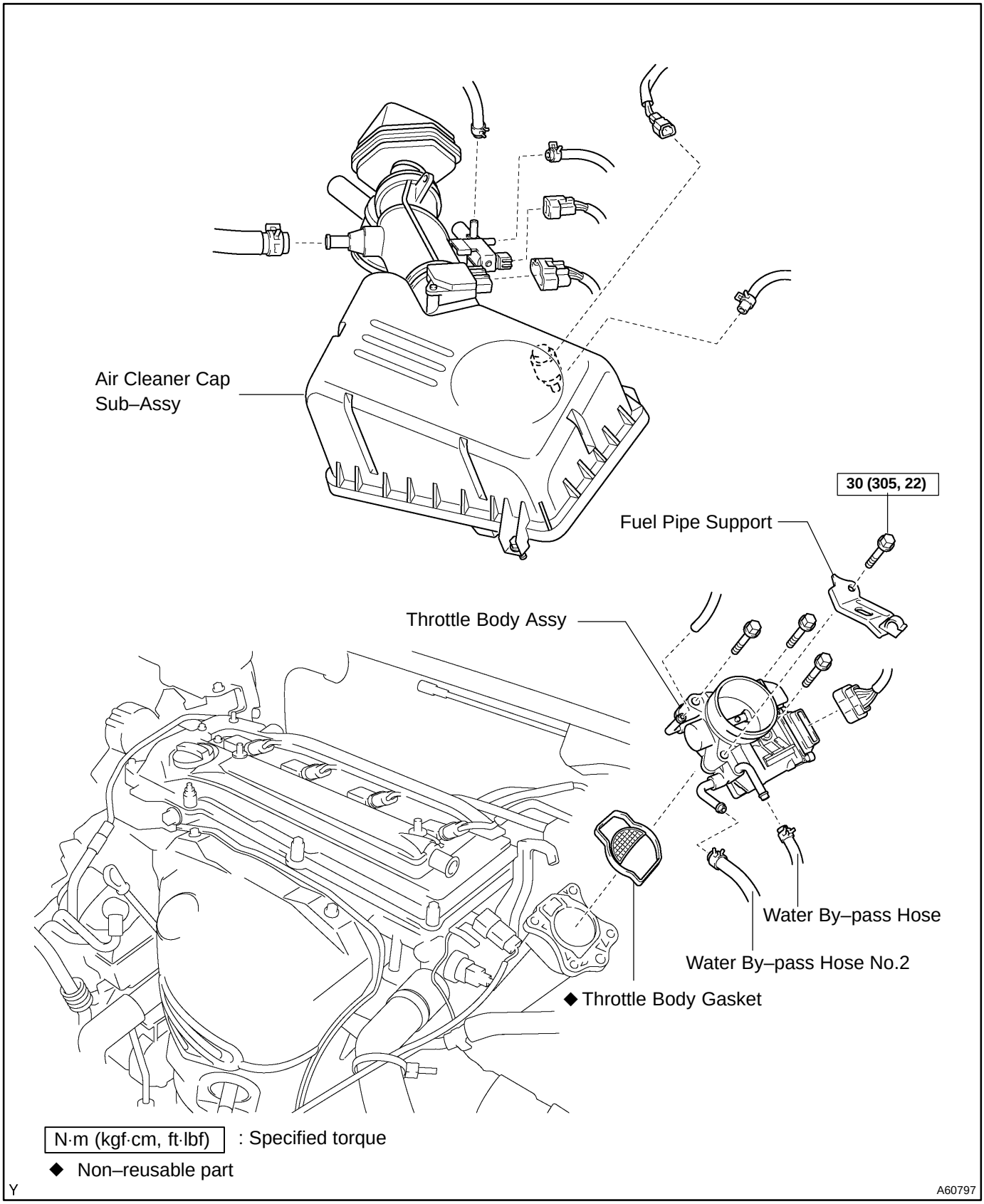

1006B–01

Removal & Installation and Disassembly & Reassembly

1. DRAIN COOLANT(See page 16–6)

2. REMOVE AIR CLEANER CAP WITH AIR CLEANER HOSE

3. REMOVE THROTTLE BODY ASSY

(a) Disconnect the throttle body assy connector.
(b) Disconnect the vacuum hose from the throttle body.
(c) Disconnect 2 water by–pass hoses.

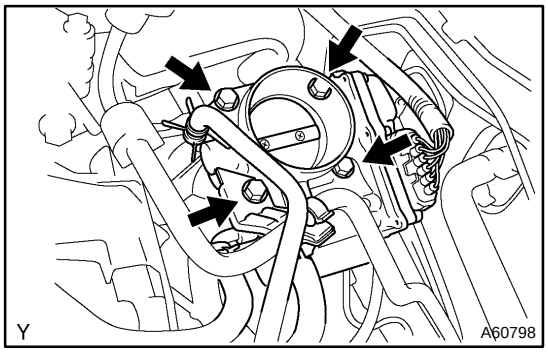

(d) Remove 4 bolts and throttle body assy from intake manifold.
(e) Remove the throttle body gasket.

4. INSTALL THROTTLE BODY ASSY

(a) Install a new gasket on the intake manifold, as shown in the illustration.

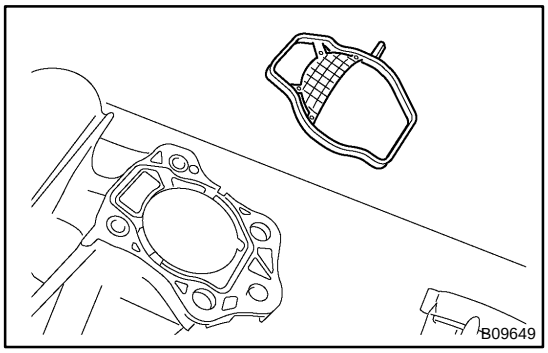

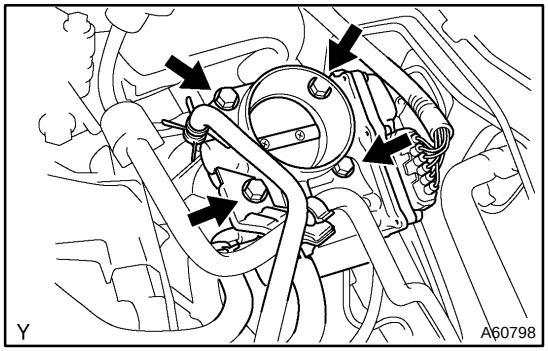

(b) install the throttle body assy with 4 bolts.
Torque: 30 N·m (305 kgf·cm, 22 ft·lbf)
(c) Connect 2 water by–pass hoses to the throttle body assy.
(d) Connect the throttle body assy connector.
(e) Connect the vacuum hose to the throttle body assy.

5. ADD COOLANT (See page 16–6)

6. INSPECT CHECK ENGINE COOLANT LEAK (See page 16–1)

SFI SYSTEM (1MZ–FE)

10064–01

ON–VEHICLE INSPECTION

1. INSPECTION THROTTLE BODY

(a) Inspect the throttle control motor for operating sound.
  (1) Turn the ignition switch ON.
  (2) When turning the accelerator pedal position sensor lever, check the running sound of the motor. Also, check that there is no friction sound.

(b) Inspect the throttle position sensor.
  (1) Connect the hand–held tester or OBD II scan tool to the DLC3.
  (2) Turn the ignition switch ON.
  (3) Check that the check engine warning light does not light up.
  (4) Check that the throttle valve opening percentage (THROTTLE POS) of the CURRENT DATA shown the standard value.

  Standard throttle valve opening percentage: 60 % or more

2. INSPECT ACCELERATOR PEDAL POSITION SENSOR

(a) When turning ignition switch ON, check that the voltage of the throttle position sensor of the CURRENT DATA shown the standard value.

  Standard voltage: 0.6 – 1.0 V

10065–01

INSPECTION

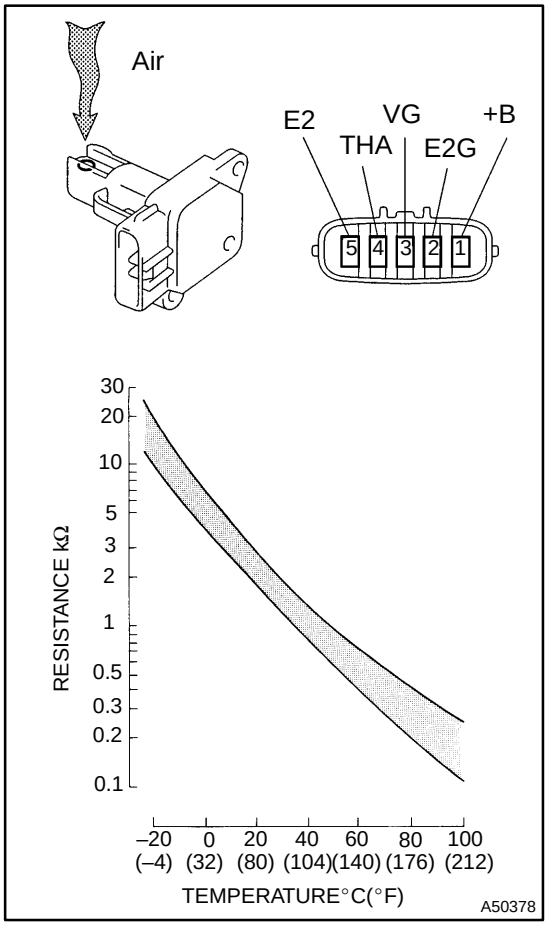

1. INTAKE AIR FLOW METER SUB–ASSY

(a) Output voltage inspection.
  (1) Apply battery voltage across terminals 1 (+B) and 2 (E2G).
  (2) Using a voltmeter, connect the positive (+) tester probe to terminal VG, and negative (–) tester probe to terminal E2G.
  (3) Blow air into the MAF meter, and check that the voltage fluctuates.

(b) Resistance inspection.
  (1) Using an ohmmeter, measure the resistance between terminals 4 (THA) and 5 (E2).

Resistance:
–20°C (–4°F) 13.6 – 18.4 kΩ
20°C (68°F) 2.21 – 2.69 kΩ
60°C (140°F) 0.493 – 0.667 kΩ

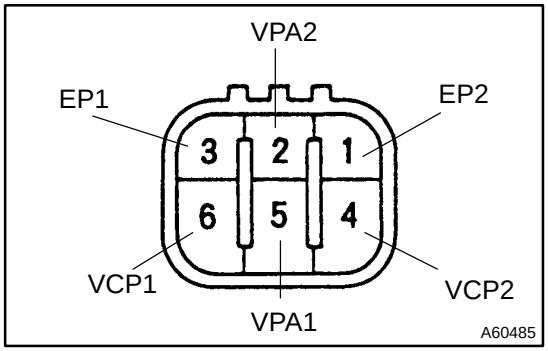

2. ACCELERATOR PEDAL ASSY

(a) Resistance inspection
  (1) Using an ohmmeter, measure the resistance between terminals.

Resistance:

Terminal	Resistance
2 (VPA2) ⇔ 3 (EP1)	5.0 kΩ or less
5 (VPA1) ⇔ 1 (EP2)	5.0 kΩ or less
6 (VCP1) ⇔ 3 (EP1)	2.25 – 4.75 kΩ
4 (VCP2) ⇔ 1 (EP2)	2.25 – 4.75 kΩ

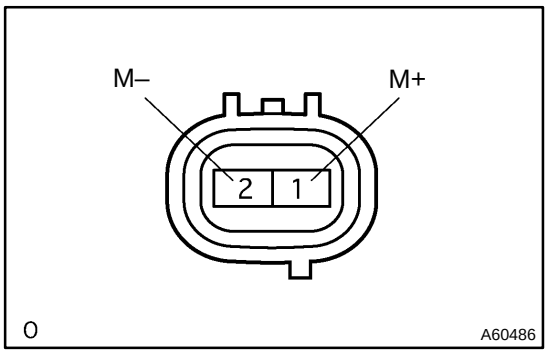

3. THROTTLE BODY ASSY

(a) Resistance inspection
(1) Using an ohmmeter, measure the resistance between terminals.
Resistance: 0.3 – 100 Ω at 20°C (68°F)

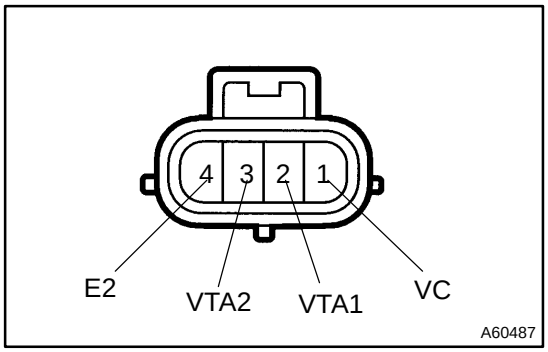

4. E.F.I. THROTTLE POSITION SENSOR

(a) Resistance inspection.
(1) Using an ohmmeter, measure the resistance between terminals 1 (VC) and 4 (E2).
Resistance: 1.2 – 3.2 kΩ

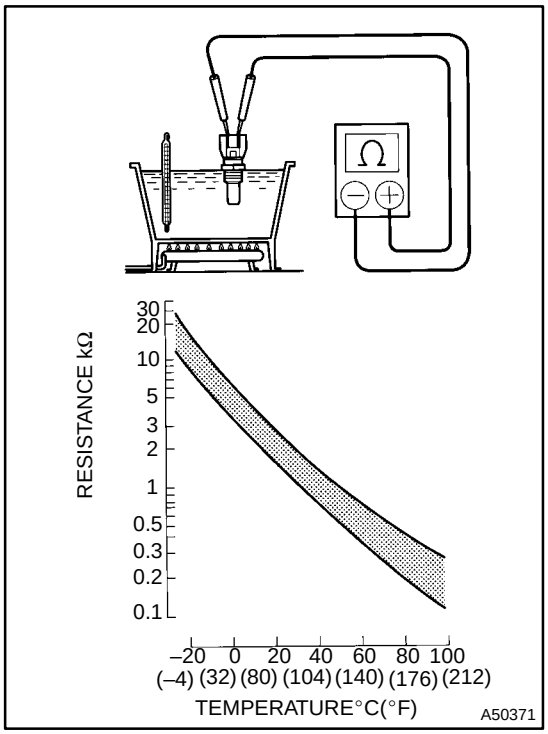

5. E.F.I. ENGINE COOLANT TEMPERATURE SENSOR

(a) Resistance inspection.
(1) Using an ohmmeter, measure the resistance between each terminal.
Resistance:
Approx. 20°C (68°F) 2.32 – 2.59 kΩ
Approx. 80°C (176°F) 0.310 – 0.326 kΩ

NOTICE:
In case of checking the water temperature sensor in the water, be careful not to allow water to go into the terminals, and after checking, wipe out the sensor.

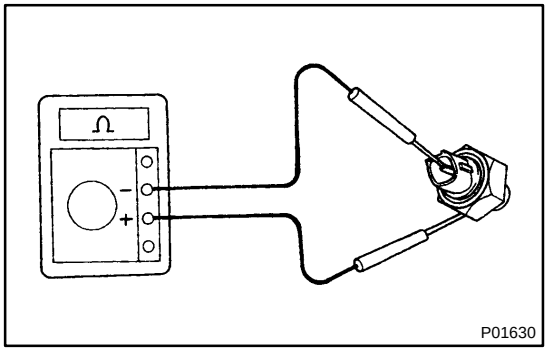

6. KNOCK CONTROL SENSOR

(a) Continuity inspection.
(1) Using an ohmmeter, check that no continuity exists between the terminal and body.

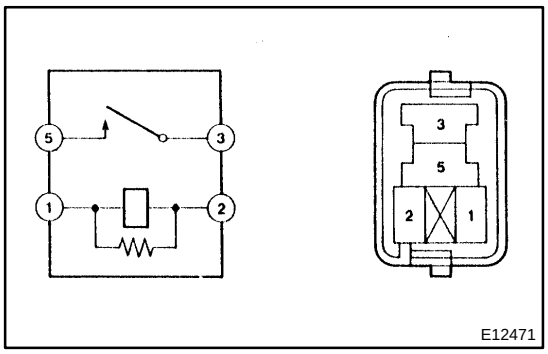

7. E.F.I. CIRCUIT OPENING RELAY ASSY
E.F.I ECU RELAY
AIR FUEL RATIO SENSOR HEATER RELAY

(a) Continuity inspection.

(1) Using an ohmmeter, check that continuity exists between each terminal.

Specified condition:

Between terminal 1and 2 Continuity

Between terminal 3and 5 No continuity

(2) Using an ohmmeter, check that continuity exists between terminals 3 and 5 when the battery voltage is applied across terminals 1 and 2.

THROTTLE BODY ASSY (1MZ–FE)

10066–01

COMPONENTS

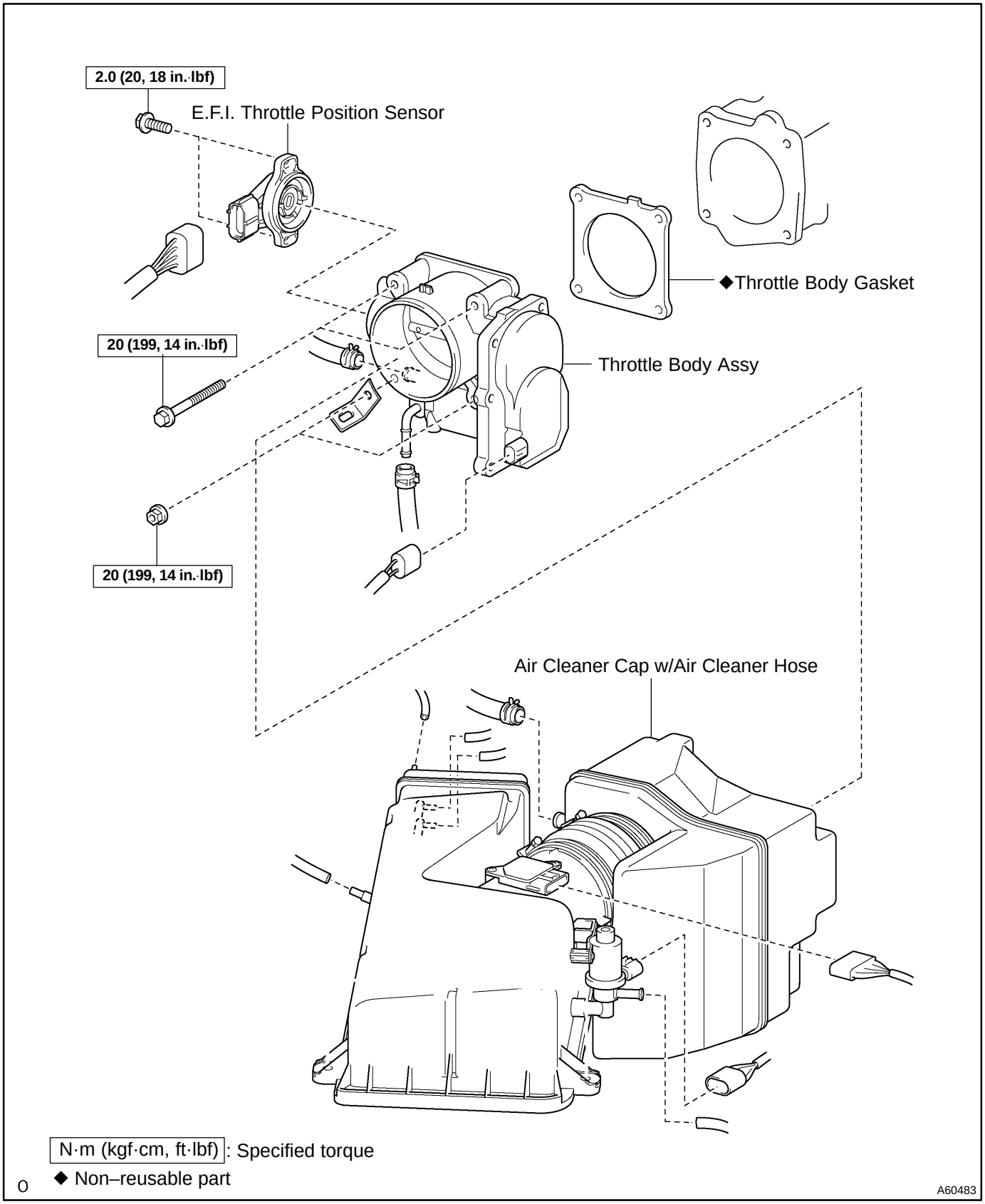

10067–01

Removal & Installation and Disassembly & Reassembly

1. DRAIN COOLANT(See page 16–20)

2. REMOVE AIR CLEANER CAP WITH AIR CLEANER HOSE

(a) Disconnect the MAF meter connector.
(b) Disconnect the VSV connector for canister closed valve (CCV) and the air hose.
(c) Disconnect the 4 vacuum hoses and the ventilation hose.
(d) Remove the air cleaner cap with the hose.

3. REMOVE FRONT SUSPENSION UPPER BRACE CENTER (W/ FRONT SUSPENSION BRACE UPPER CENTER)

4. REMOVE THROTTLE BODY ASSY

(a) Disconnect the throttle position sensor connector.
(b) Disconnect the throttle control motor connector.
(c) Disconnect the 2 water bypass hoses.

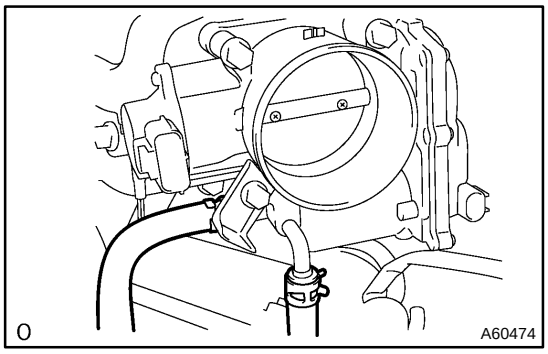

(d) Remove the 2 bolts, 2 nuts. throttle body and gasket.

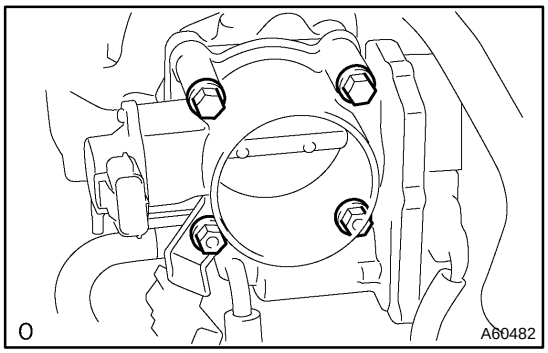

5. REMOVE E.F.I. THROTTLE POSITION SENSOR

(a) Remove the 2 set screws and throttle position sensor.

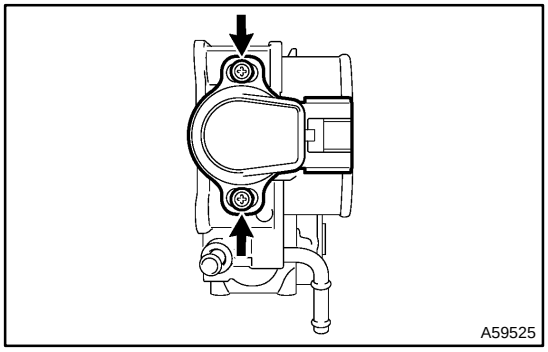

6. INSTALL E.F.I. THROTTLE POSITION SENSOR

(a) Check that the throttle valve is under the condition of the opener opening angle (about 7°).

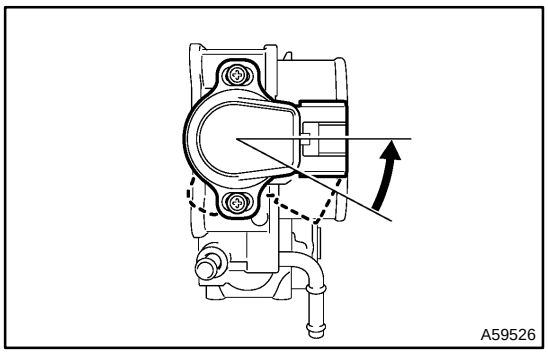

(b) Install the sensor to the place where is at 20 – 30° rotated to the right from the specified installation position.
(c) Gradually turn sensor counterclockwise until it touches the throttle valve shaft, and temporarily tighten the 2 set screws.

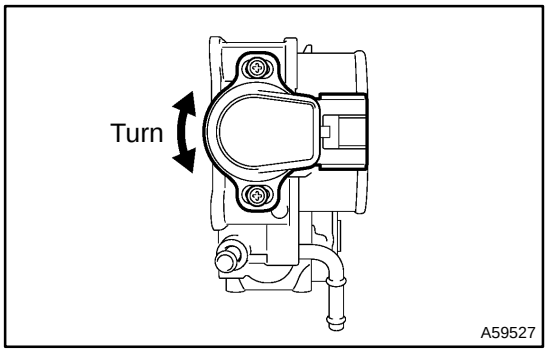

(d) Connect the throttle position sensor connector.
(e) Connect the hand–held tester or OBD II scan tool to the DLC3.
(f) Turn the ignition switch ON.

NOTICE:
After turning the ignition switch ON, do not depress the accelerator pedal.

(g) While reading the valve of the throttle valve opening percentage (THROTTLE POS) of the CURRENT DATA, turn the throttle position sensor slowly to left and right and set the sensor at the center value of the standard value, and then tighten the screws.
Standard throttle valve opening percentage:
16.8 – 18.4 %
Torque: 2.0 N·m (20 kgf·cm, 18 in.·lbf)

NOTICE:
After turning the ignition switch ON, do not depress the accelerator pedal.

(h) Recheck throttle valve opening percentage.

If the throttle valve opening percentage is not as specified, repeat step (g).

(i) Perform fully closed throttle valve by hand and check that the valve of the throttle valve opening percentage (THROTTLE POS) of the CURRENT DATA stays with the standard value.
Standard throttle valve opening percentage:
10 – 14 %

If the throttle valve opening percentage is not as specified, repeat step (g) to (i).

(j) Paint the 2 set screws.
(k) Turn the ignition switch OFF.
(l) Disconnect the hand–held tester or OBD II scan tool from the DLC3.
(m) Disconnect the throttle position sensor connector.

7. INSTALL THROTTLE BODY ASSY

(a) Install a new gasket and the throttle body.
Torque: 20 N·m (199 kgf·cm, 14 ft·lbf)

8. INSTALL FRONT SUSPENSION UPPER BRACE CENTER (W/ FRONT SUSPENSION BRACE UPPER CENTER)

Torque: 80 N·m (816 kgf·cm, 59 ft·lbf)

9. ADD COOLANT (See page 16–20)

10. CHECK ENGINE COOLANT LEAK (See page16–20)

11. INSPECT FUNCTION OF THROTTLE BODY ASSY (See page 10–7)

FUEL SYSTEM (2AZ–FE)

1109K–01

PRECAUTION

1. PRECAUTION

(a) Before working on fuel system, disconnect negative (–) terminal cable from battery.

(b) Do not smoke or work near an open flame when working on fuel system.

(c) Keep gasoline away from rubber or leather parts.

2. WORK FOR PREVENT GASOLINE FROM SPILLING OUT

CAUTION:

- **Perform disconnecting operation of the fuel system parts after working for prevent gasoline form spilling out.**
- **As there is remained pressure in the fuel line after working for prevent gasoline from spilling out, prevent it from splashing inside the vehicle compartment by covering them with a shop rag.**

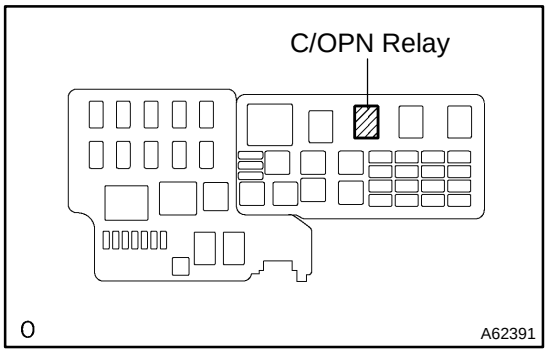

(a) Remove the circuit opening relay in the engine room relay block.

(b) Start the engine. After the engine has stopped on its own, turn the ignition switch OFF.

HINT:

There is a case that DTC P0171 (system to lean) is output.

(c) Check that the engine does not start.

(d) Remove the fuel tank cap, and let the air out of the fuel tank.

(e) Disconnect negative (–) terminal cable from battery.

(f) Reinstall the circuit opening relay.

3. FUEL SYSTEM

(a) When disconnecting the high fuel pressure line, a large amount of gasoline will spill out, so observe these procedures.

(1) Work for prevent gasoline from spilling out.

(2) Disconnect the fuel pump tube.
(See page 11–15)

(3) Drain the fuel remained inside the fuel pump tube.

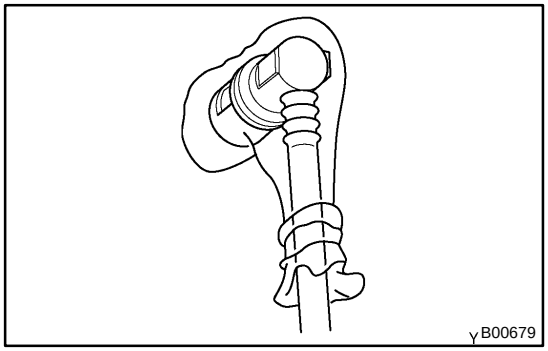

(4) Prevent the disconnected fuel pump tube from damaging and mixing foreign objects by covering them with a vinyl bag.

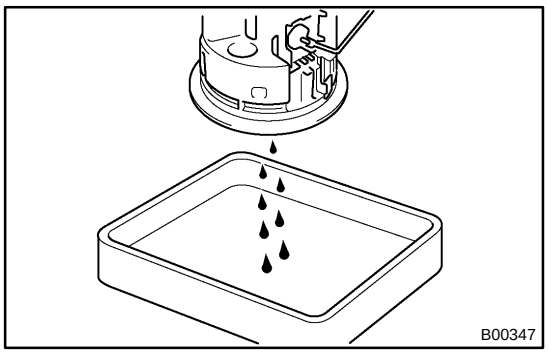

(5) Put a container under the connection.

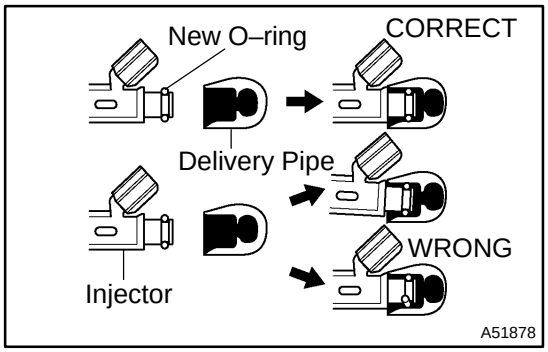

(b) Observe these precautions when removing and installing the injector.
(1) Never reuse the O–ring.
(2) When placing a new O–ring on the injector, take care not to damage it in any way.
(3) Coat a new O–ring with spindle oil or gasoline before installing. Never use engine, gear or brake oil.

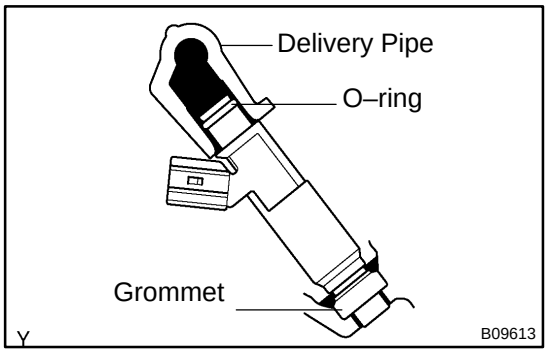

(c) Install the injector to the delivery pipe and cylinder head, as shown in the illustration. Before installing the injector, be sure to apply spindle oil or gasoline on the place where the delivery pipe touches O–ring of the injector.

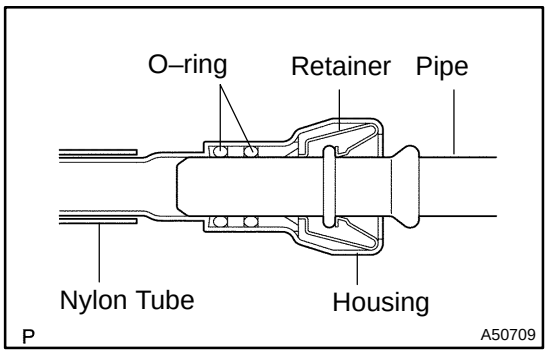

(d) Observe these precautions when disconnecting the fuel delivery pipe.

HINT:
The structure of the metallic connector is shown as left.

(1) Remove the fuel pipe clamp No.2.

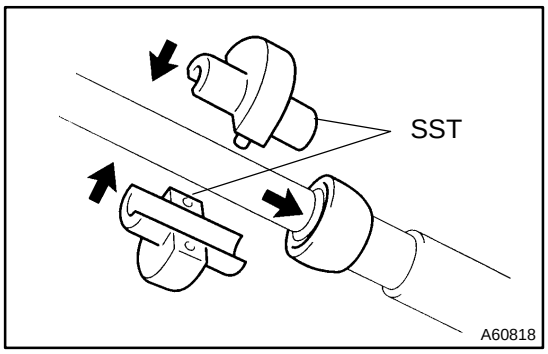

(2) Find the metallic connector of the fuel tube assembly, pull it out towards the rear and hold it as it is.
(3) Assemble SST to the connection as shown.

SST 09268–21010

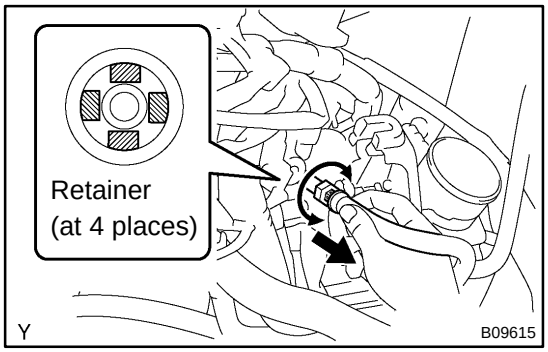

(4) Turn SST, align the retainers inside the connector with SST chamfered parts and insert SST into the connector.
(5) Slide SST and the connector together towards the fuel tube assembly.

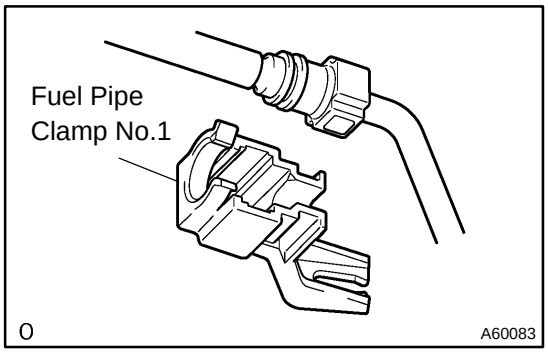

(e) Observe these following precautions when disconnecting the fuel tube connector (quick type).
(1) Remove the fuel pipe clamp No.1.
(2) Check if there is any dirt like mud on the pipe and around the connector before disconnecting them and clean the dirt away.

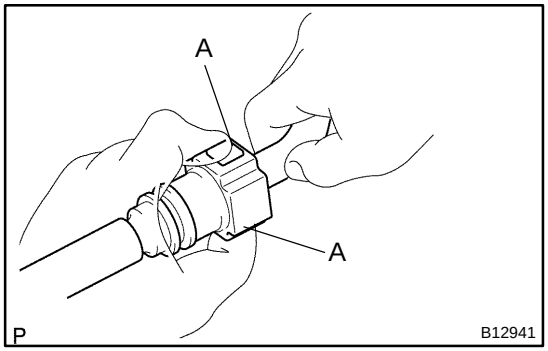

(3) Disconnect the connector from the hose while pinching part A with fingers as shown in the illustration.

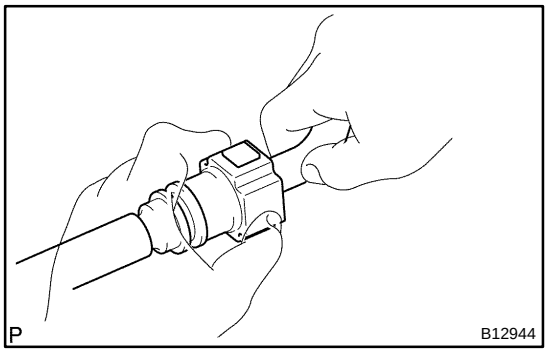

(4) When the connector and the pipe are stuck, pinch the fuel pipe between the hands, push and pull the connector to free to disconnect and pull it out. Do not use any tool at this time.
(5) Inspect if there is any dirt or the likes on the seal surface of the disconnected pipe and clean it away.

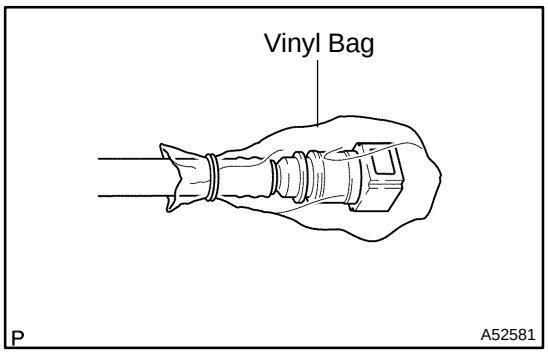

(6) Prevent the disconnected pipe and connector from damaging and mixing foreign objects by covering them with a vinyl bag.

4. CHECK FUEL LEAK

(a) Check that there are no fuel leaks after doing maintenance anywhere on the fuel system. (See page 11–5)

ON–VEHICLE INSPECTION

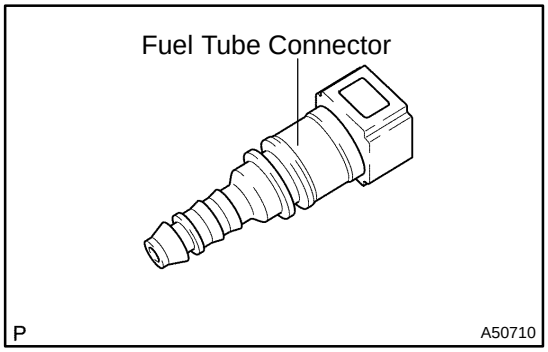

1. CHECK FUEL PRESSURE

(a) Prepare for inspection.

(1) Purchase the new fuel tube and take out the fuel tube connector from its pipe.

HINT:

Part No. 23901–28130

(b) Work for prevent gasoline from spilling out.
(See page 11–1)

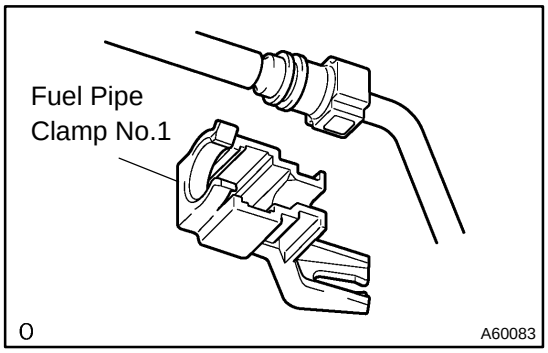

(c) Remove the fuel pipe clamp No.1 from the fuel tube connector.

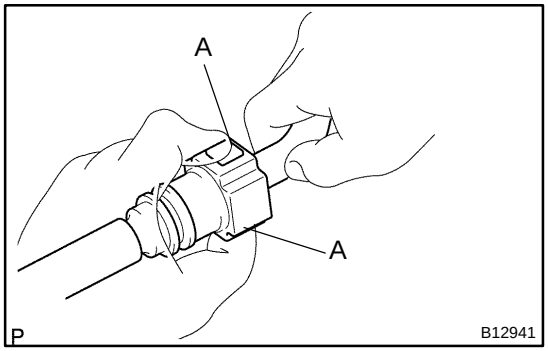

(d) Disconnect the fuel tube connector from the fuel pipe while pinching part A with fingers as shown in the illustration.

CAUTION:

- **Perform disconnecting operations of the fuel tube connector (quick type) after observing the precautions.**
- **As there is retained pressure in the fuel pipe line, prevent it from splashing inside the engine compartment.**

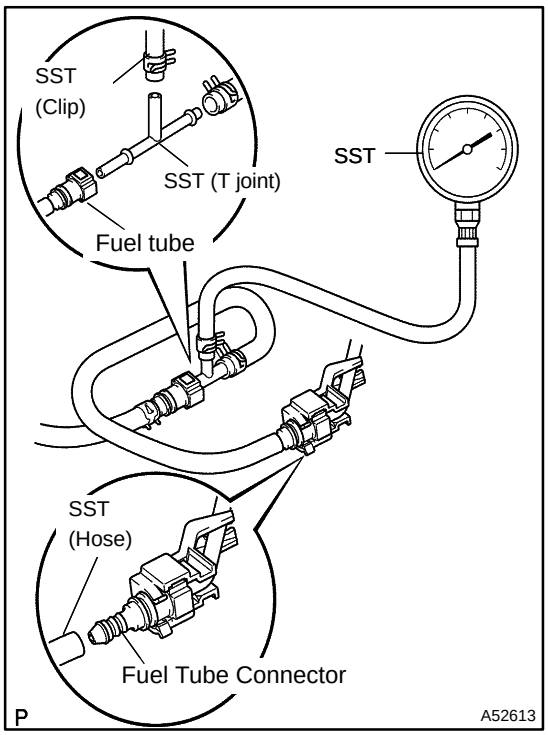

(e) Install SST (pressure gauge) as shown in the illustration by using SST and fuel tube connector.
SST 09268–41047 (90467–13001, 95336–08070), 09268–45012 (09268–41250)

(f) Wipe off any splattered gasoline.

(g) Reconnect the negative (–) terminal cable to the battery.

(h) Connect the hand–hand tester to the DLC3.

(i) Measure the fuel pressure regulator.
Fuel pressure:
304 – 343 kPa (3.1 – 3.5 kgf/cm^2, 44 – 50 psi)

If pressure is high, replace the fuel pressure regulator.
If pressure is low, check the fuel hoses and connections, fuel pump, fuel filter and fuel pressure regulator.

(j) Disconnect the hand–held tester from the DLC3.

(k) Start the engine.

(l) Measure the fuel pressure at idle.
Fuel pressure:
304 – 343 kPa (3.1 – 3.5 kgf/cm^2, 44 – 50 psi)

(m) Stop the engine.

(n) Check that the fuel pressure remains as specified for 5 minutes after the engine has stopped.
Fuel pressure: 147 kPa (1.5 kgf/cm^2, 21 psi) or more

If pressure is not as specified, check the fuel pump, pressure regulator and/or injectors.

(o) After checking fuel pressure, disconnect the negative (–) terminal cable from the battery and carefully remove the SST and fuel tube connector to prevent gasoline from splashing.

(p) Reconnect the fuel tube (fuel tube connector).

CAUTION:
Perform connecting operations of the fuel tube connector (quick type) after observing the precautions.

2. CHECK FUEL PUMP OPERATION AND FUEL LEAK

(a) When using hand–held tester
(1) Connect the hand–held tester to the DLC3.
(2) Turn the ignition switch ON and hand–held tester main switch ON.

NOTICE:
Do not start the engine.

(3) Select the active test mode on the hand–held tester.
(4) Please refer to the hand–held tester operator's manual for further details.

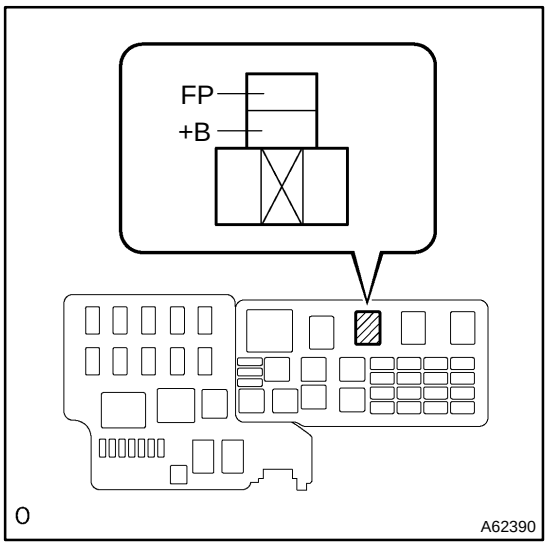

(b) When not using hand–held tester
  (1) Remove the circuit opening relay.
  (2) Using a service wire connect terminals FP and +B of the relay block.

NOTICE:

Pay due attention to the terminal connecting position to avoid a malfunction.

  (3) Turn the ignition switch ON, and check that the fuel pump operates.

NOTICE:

Do not start the engine.

(c) Check that there are no fuel leaks after doing maintenance anywhere on the fuel system.

11024–02

INSPECTION

1. FUEL INJECTOR ASSY

(a) Inspect injector resistance

(1) Using an ohmmeter, measure the resistance between the terminals.

Resistance: 13.4 – 14.2 Ω at 20°C (68°F)

If the resistance is not as specified, replace the injector.

(b) Inspect injector inspection

CAUTION:

Keep injector clear of sparks during the test.

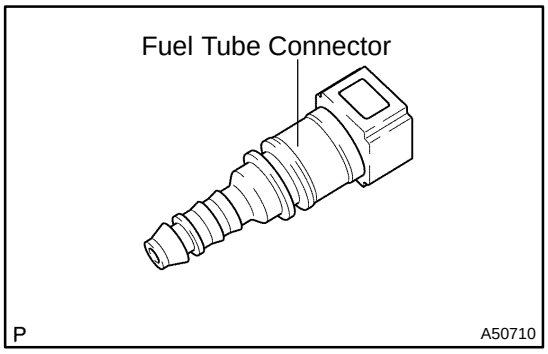

(1) Purchase the new fuel tube and take out the fuel tube connector from its pipe.

HINT:

Part No. 23901–28130

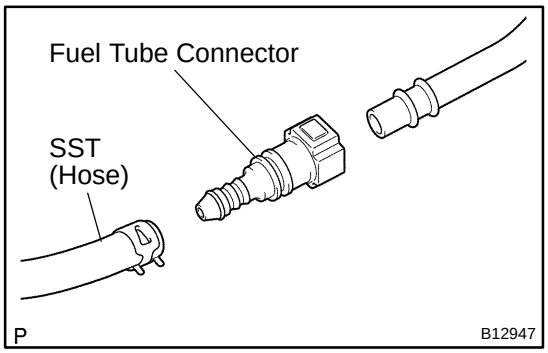

(2) Connect SST and fuel tube connector to the fuel pipe.

SST 09268–41047 (90467–13001, 95336–08070)

CAUTION:

Perform connecting operations of the fuel tube connector (quick type) after observing the precautions.

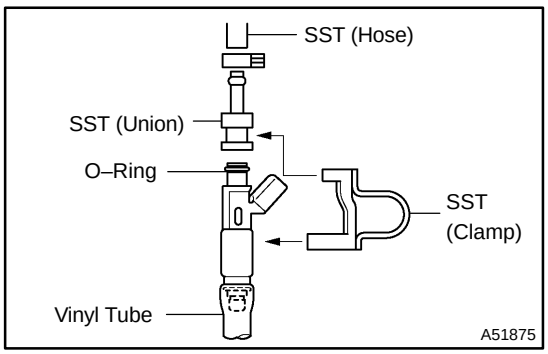

(3) Install the O–ring to the injector.

(4) Connect SST (union and hose) to the injector, and hold the injector and union with SST (clamp)

SST 09268–41047 (09268–41110, 09268–41300, 90467–13001, 95336–08070)

(5) Put the injector into a graduated cylinder.

HINT:

Install a suitable vinyl tube onto the injector to prevent gasoline from splashing out.

(6) Operate the fuel pump.(See Page 11–5)

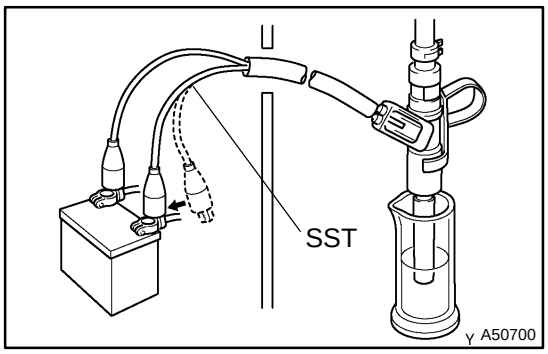

(7) Connect SST to the connector of injector.
(8) Connect SST (wire) to the battery for 15 seconds, and measure the injection volume with a graduated cylinder. Test each injector 2 or 3 time.

SST 09842–30080

Injection volume:

Injection volume	Difference between each injector
68 – 82 cm^3 (4.1 – 4.9 cu in.) per 15 seconds	14 cm^3 (0.9 cu in.) or less

NOTICE:

Always do the switching at the battery side.

If the injection volume is not as specified, replace the injector.

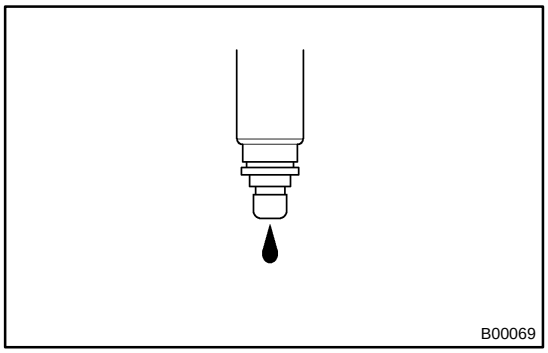

(c) Inspect leakage
(1) In the condition above, disconnect the test probes of SST (wire) from the battery and check the fuel leakage from the injector.

Fuel drop: 1 drop or less per 12 minutes

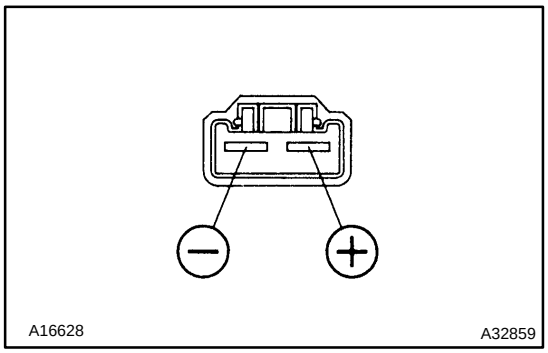

2. FUEL PUMP

(a) Insect fuel pump resistance.
(1) Using an ohmmeter, measure the resistance between terminals.

Resistance: 0.2 – 3.0 Ω at 20°C (68°F)

(b) Inspect fuel pump operation
(1) Apply battery voltage to both terminals. Check that the pump operates.

NOTICE:

- **These tests must be done quickly (within 10 seconds) to prevent the coil from burning out.**
- **Keep fuel pump as far away from the battery as possible.**
- **Always do the switching at the battery side.**

FUEL INJECTOR ASSY (2AZ–FE)

1109L–01

COMPONENTS

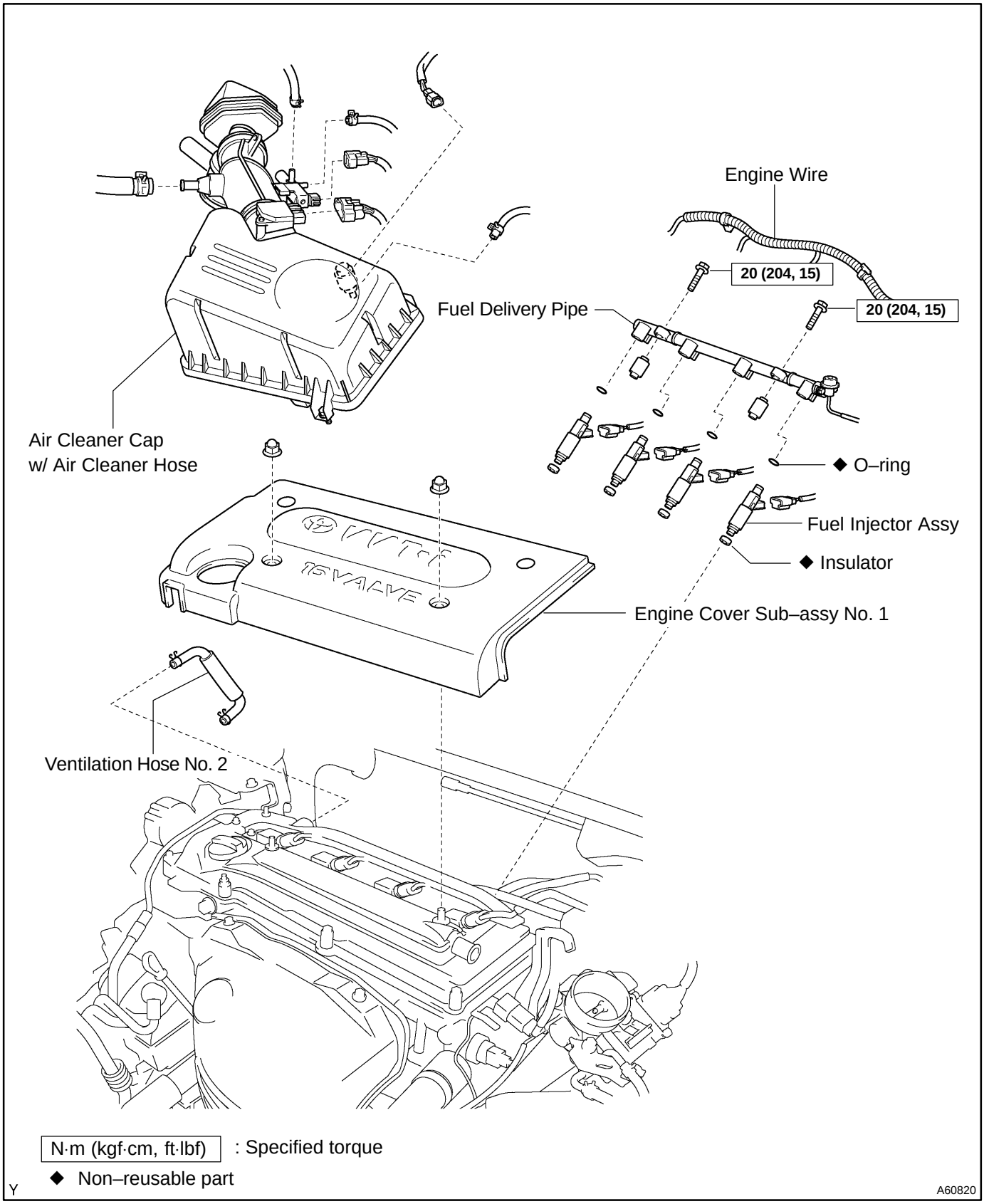

REPLACEMENT

1. **WORK FOR PREVENTING GASOLINE FROM SPILLING OUT(See page 11–1)**
2. **REMOVE AIR CLEANER CAP WITH AIR CLEANER HOSE**
3. **REMOVE ENGINE COVER SUB–ASSY NO.1**

4. **DISCONNECT FUEL TUBE SUB–ASSY**
   (See page 11–1)

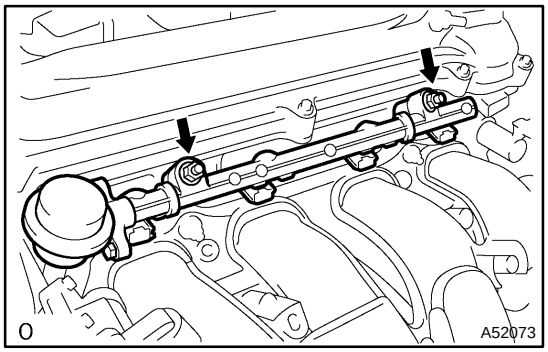

5. **REMOVE FUEL DELIVERY PIPE W/INJECTOR**

NOTICE:

Be careful not to drop the injectors when removing the delivery pipe.

(a) Remove the ventilation hose No. 2.
(b) Disconnect 4 injector connecters from the injector.
(c) Remove 2 clamp and wire harness from the delivery pipe.
(d) Remove 2 bolts and delivery pipe together with 4 injector.
(e) Remove 2 spacers from the cylinder head.

6. **REMOVE FUEL INJECTOR ASSY**

(a) Pull out 4 injector from the delivery pipe.

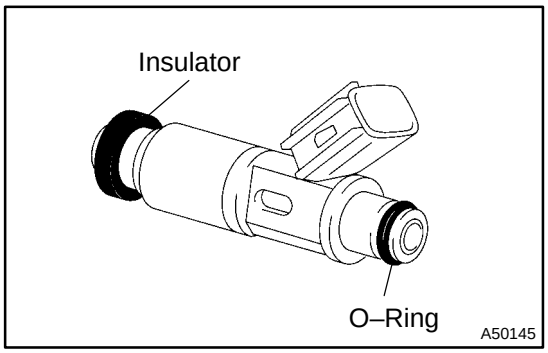

7. **INSTALL FUEL INJECTOR ASSY**

(a) Install the new insulator to each injector.
(b) Apply a light coat of spindle oil or gasoline to new O–ring and install them to each injector.

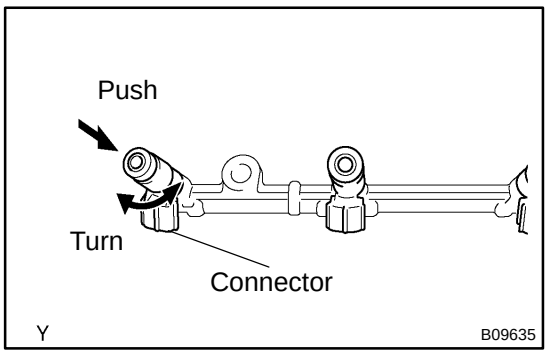

(c) Apply a light coat of spindle oil or gasoline on the place where a delivery pipe touches on O–ring.
(d) While turning the injector clockwise and counterclockwise, push it to the delivery pipes. install 4 injectors.

NOTICE:

- **Be careful not to twist the O–ring.**
- **After installing injectors, check that they turns smoothy. If an injector dose not, reinsiall it with a new O–ring.**

(e) Position the injector connector downward.

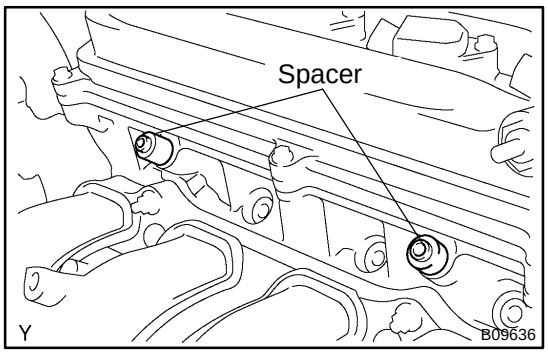

8. INSTALL FUEL DELIVERY PIPE W/INJECTOR

(a) Place 2 spacers in position on the cylinder head.

(b) Place the delivery pipe together with 4 injectors in position on the cylinder head.

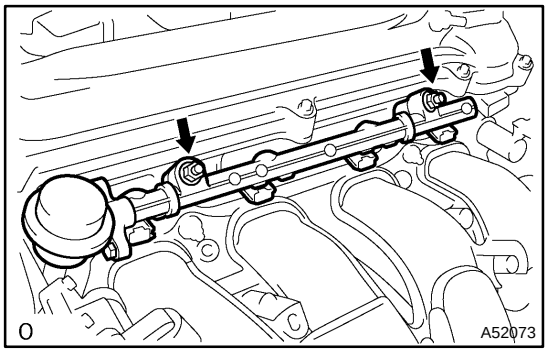

(c) Temporarily install 2 bolts holding the delivery pipe to the cylinder.

(d) Check that the injectors rotate smoothly.

HINT:

If injectors do not rotate smoothly, the probable cause is incorrect installation of O–ring. Replace the O–ring.

(e) Position the injector connector outward.

(f) Tighten 2 bolts holding the delivery pipe to the cylinder head.

Torque: 20 N·m (204 kgf·cm, 15 ft·lbf)

9. INSPECT FUEL LEAK(See page11–5)

FUEL PUMP ASSY (2AZ–FE)

1109M–01

COMPONENTS

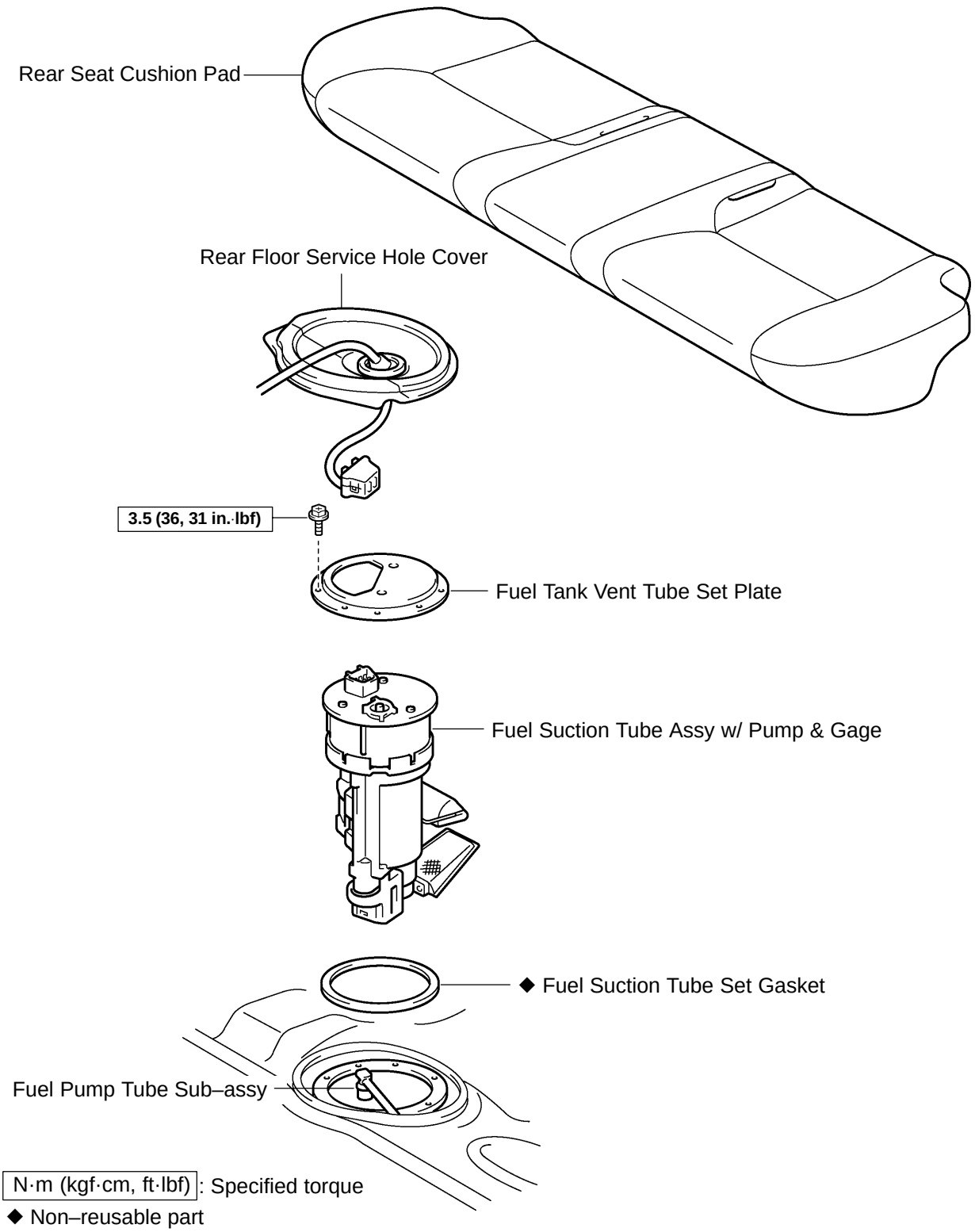

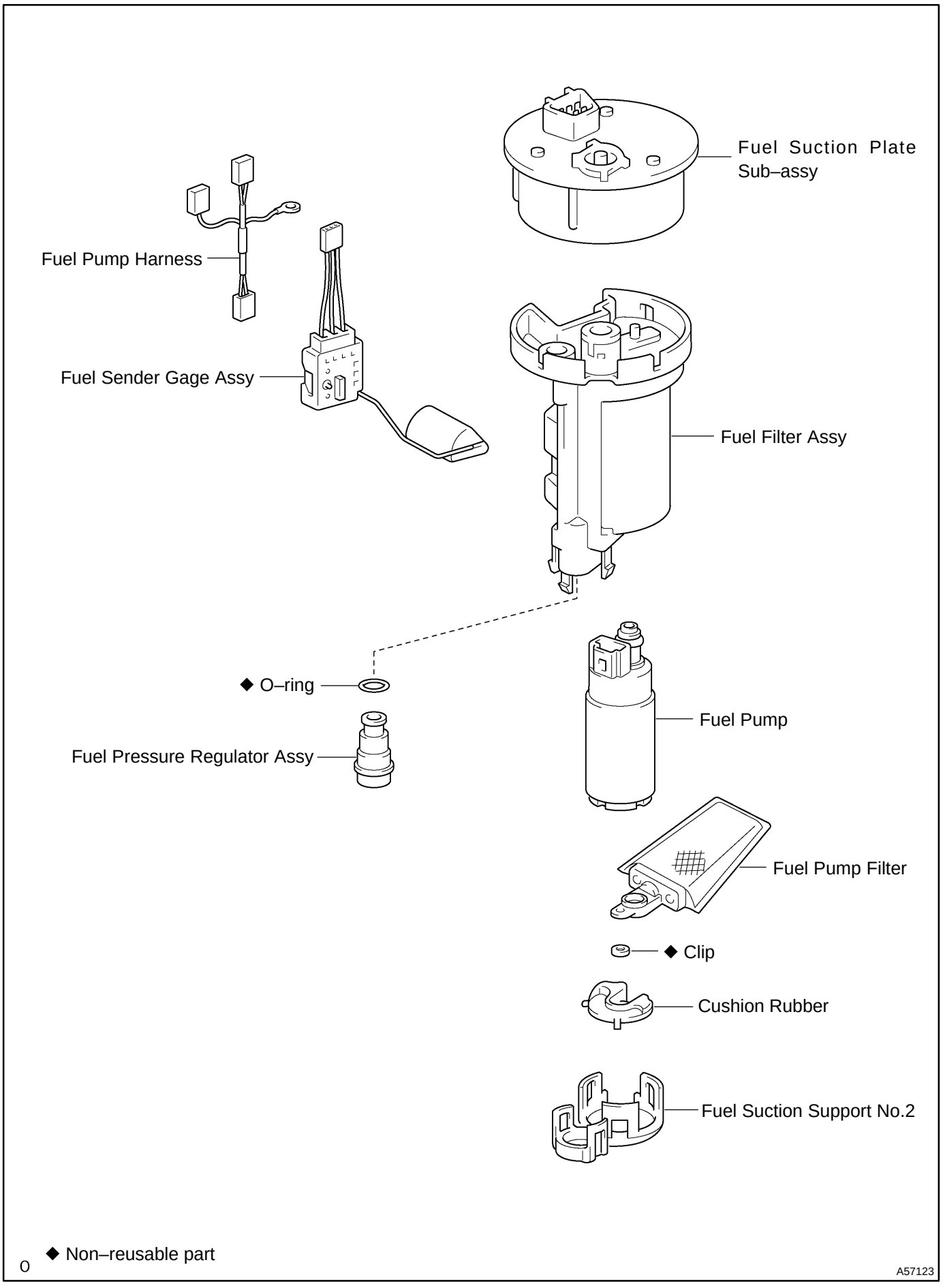
Fuel Suction Plate Sub–assy
Fuel Pump Harness
Fuel Sender Gage Assy
Fuel Filter Assy
◆ O–ring
Fuel Pump
Fuel Pressure Regulator Assy
Fuel Pump Filter
◆ Clip
Cushion Rubber
Fuel Suction Support No.2
◆ Non–reusable part
A57123

1109N–01

Removal & Installation and Disassembly & Reassembly

1. REMOVE REAR SEAT CUSHION ASSEMBLY

2. REMOVE REAR FLOOR SERVICE HOLE COVER

(a) Remove the service hole cover.

(b) Disconnect the fuel pump connector.

3. WORK FOR PREVENTING GASOLINE FROM SPILLING OUT (See page 11–1)

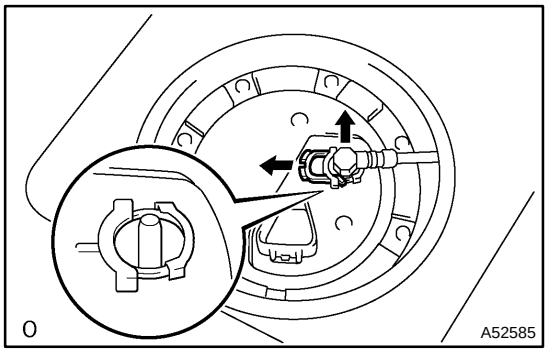

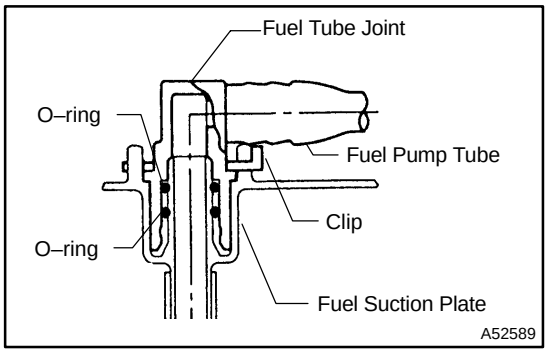

4. SEPARATE FUEL PUMP TUBE SUB–ASSY

(a) Check if there is any dirt like mud around the connector before this work and clean dirt away.

(b) Remove the joint clip, and pull out the fuel pump tube.

NOTICE:

- **Be careful of dirt like mud because the quick connector has an O–ring to seal the pipe and the connector.**
- **Do not use any tool in this work.**
- **Do not bend or twist the nylon tube by force.**
- **Keep off plug from foreign subjects.**
- **To protect the fuel tube, cover it with a vinyl bag after checking.**

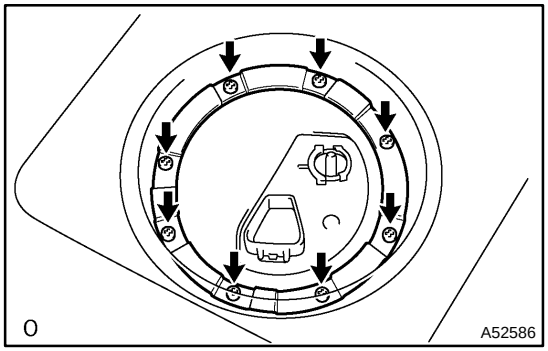

5. REMOVE FUEL TANK VENT TUBE SET PLATE

(a) Remove the 8 bolts and fuel tank vent tube set plate.

6. REMOVE FUEL SUCTION TUBE ASSY W/ PUMP & GAGE

(a) Pull out the fuel suction w/pump & gage from the fuel tank.

NOTICE:

- **Do not damage the fuel pump filter.**
- **Be careful that the arm of the sender gage should not bent.**

(b) Remove the fuel suction tube gasket.

7. REMOVE FUEL SUCTION SUPPORT NO.2

(a) Using a screwdriver, disconnect the snap claws from the claw holes and remove the fuel suction support No.2.

8. REMOVE FUEL PUMP CUSHION RUBBER

9. REMOVE FUEL PRESSURE REGULATOR ASSY

10. REMOVE FUEL PUMP ASSY W/FILTER

(a) Disconnect the fuel pump connector from the fuel pump.
(b) Pull out the fuel filter and the fuel pump assembly.

11. REMOVE FUEL PUMP FILTER

(a) Using a screwdriver, remove the fuel pump filter clip and the fuel pump filter.

12. REMOVE FUEL SUCTION PLATE SUB–ASSY

(a) Using a screwdriver, disconnect the snap claws from the claw holes and remove the fuel suction plate.

13. REMOVE FUEL SENDER GAGE ASSY

(a) Unlock the sender gage, and move it downward to remove.

14. REMOVE FUEL PUMP HARNESS

(a) Disconnect the connector, and remove the fuel pump harness.

15. INSTALL FUEL SENDER GAGE ASSY

(a) Lock the sender gage by pushing it upward.

NOTICE:
By pushing the sender gage downward, confirm that it is certainly locked.

16. INSTALL FUEL PUMP FILTER

(a) Install the fuel pump filter with a new fuel pump filter clip.

17. INSTALL FUEL PRESSURE REGULATOR ASSY

(a) Apply gasoline to a new O–ring, and install it to the pressure regulator.
(b) Insert the pressure regulator.

18. INSTALL FUEL SUCTION TUBE ASSY W/ PUMP & GAGE

(a) Install a new gasket and fuel suction tube w/pump & gage.

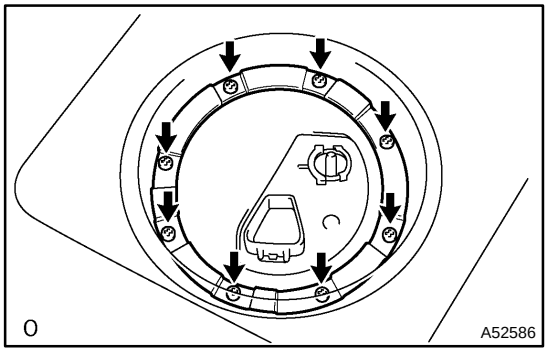

19. INSTALL FUEL TANK VENT TUBE SET PLATE

(a) Install the fuel tank vent tube set plate with the 8 bolts.
3.5 N·m (36 kgf·cm, 31 in.·lbf)

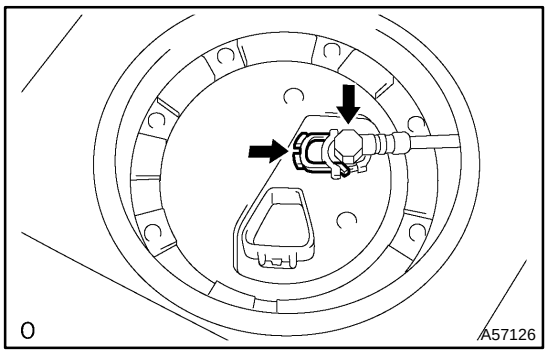

20. INSTALL FUEL PUMP TUBE SUB–ASSY

(a) Connect the main tube with the tube joint clip.

NOTICE:

- **Check that there is no scratch or foreign objects on the connecting part.**
- **Check that the connector is inserted fully and securely.**
- **Check that the clip of the tube joint is on the coller of the connector.**
- **After installing the clip of the tube joint, check that the connector is not pulled off.**

21. INSTALL REAR FLOOR SERVICE HOLE COVER

(a) Using a new butyl tape set, and install the rear floor service hole cover.

22. INSPECT FUEL LEAK

FUEL TANK ASSY (2AZ–FE)

COMPONENTS

1109O–01

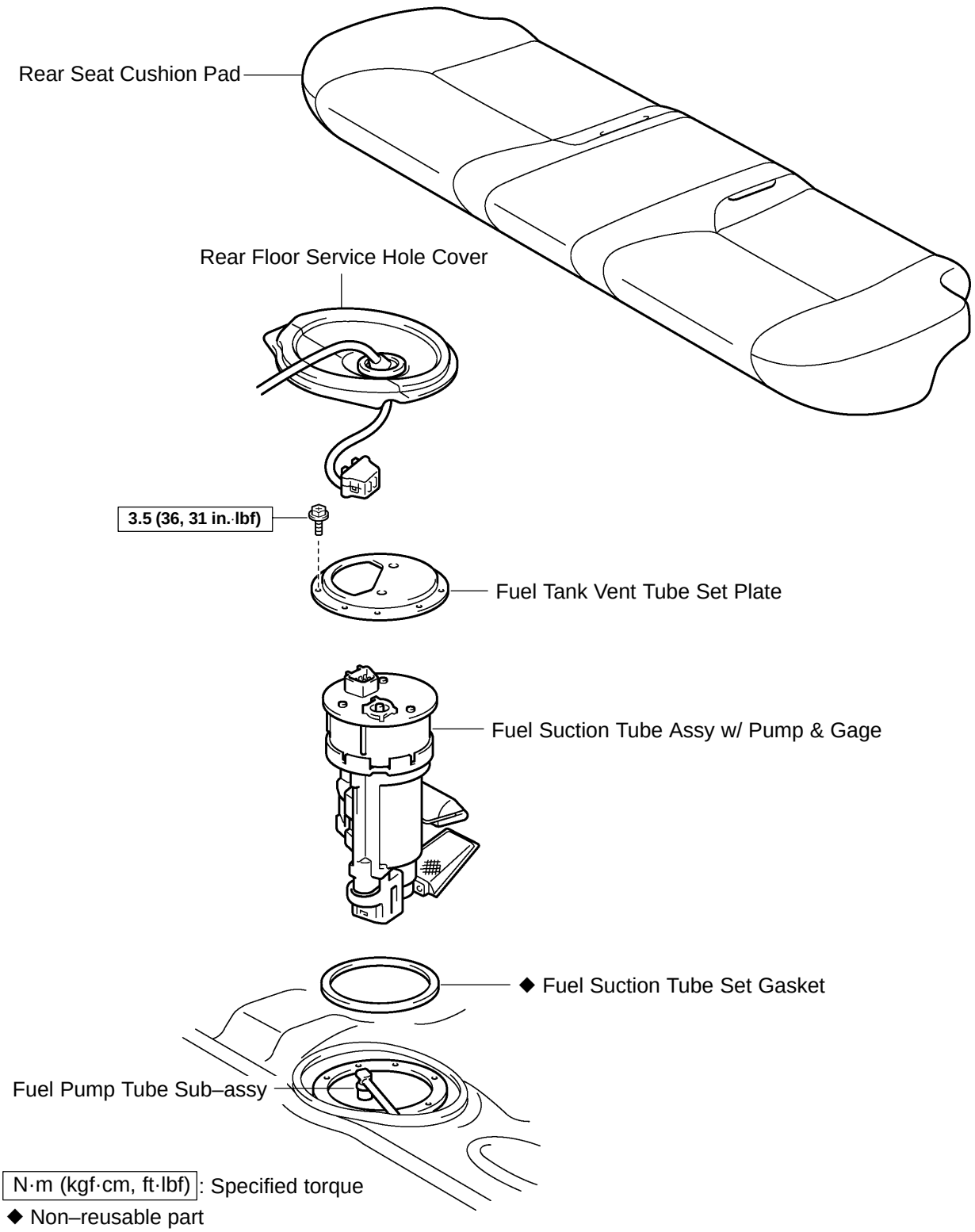

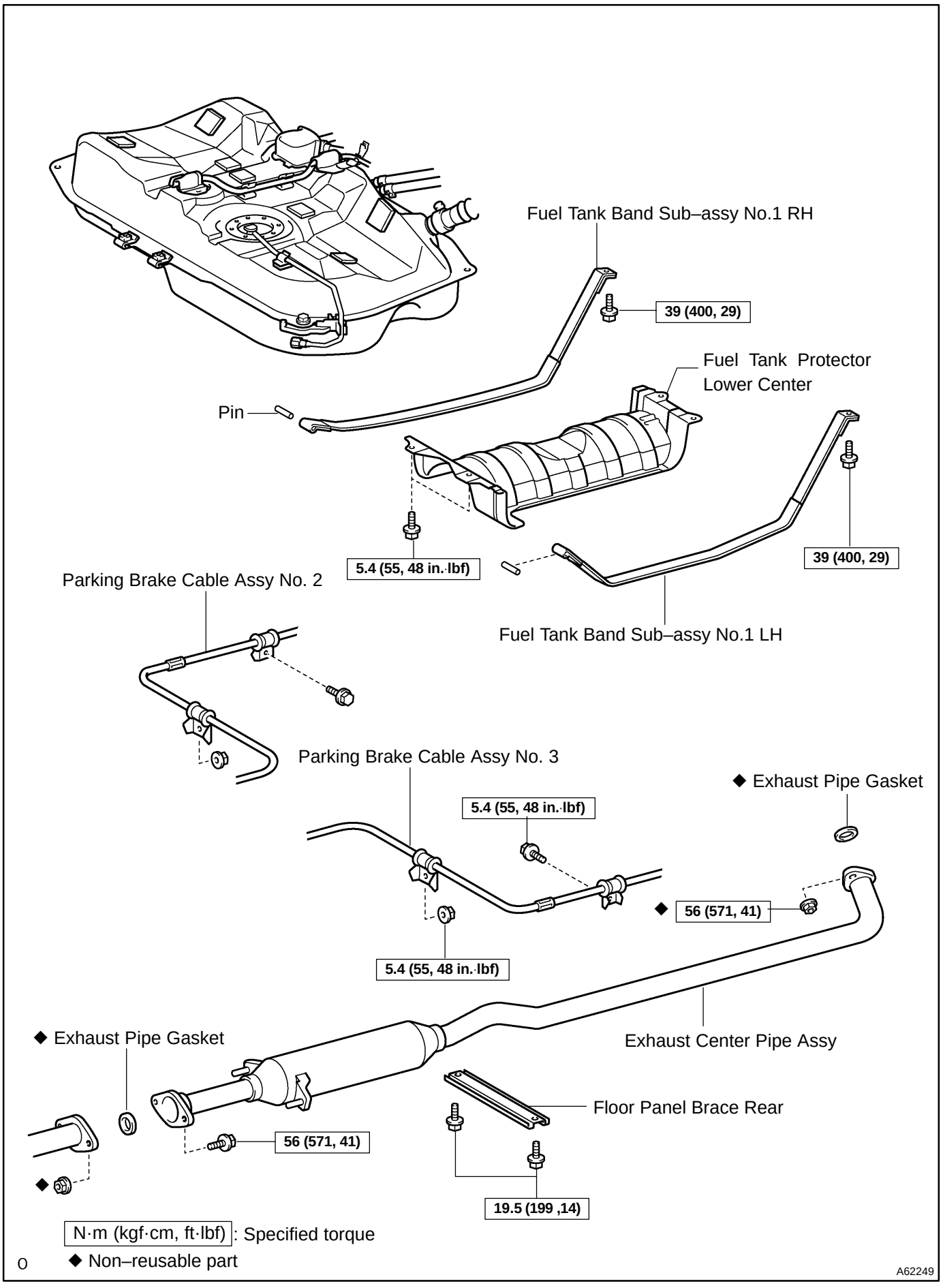
Fuel Tank Band Sub–assy No.1 RH
39 (400, 29)
Fuel Tank Protector Lower Center
Pin
5.4 (55, 48 in.·lbf)
39 (400, 29)
Parking Brake Cable Assy No. 2
Fuel Tank Band Sub–assy No.1 LH
Parking Brake Cable Assy No. 3
◆ Exhaust Pipe Gasket
5.4 (55, 48 in.·lbf)
◆ 56 (571, 41)
5.4 (55, 48 in.·lbf)
◆ Exhaust Pipe Gasket
Exhaust Center Pipe Assy
Floor Panel Brace Rear
56 (571, 41)
◆
19.5 (199 ,14)
N·m (kgf·cm, ft·lbf): Specified torque
◆ Non–reusable part
A62249

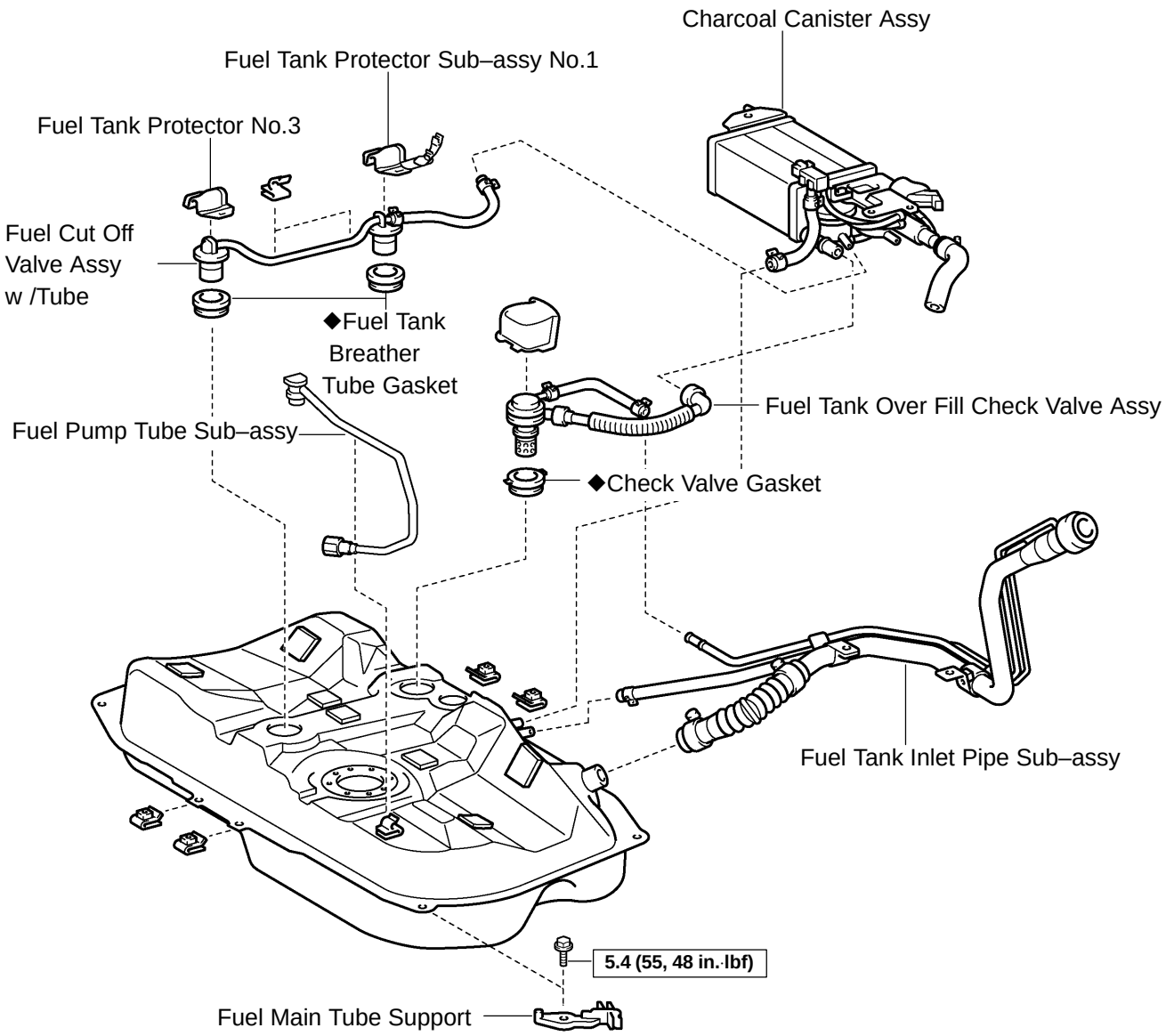

Location of Fuel Tank Cushion

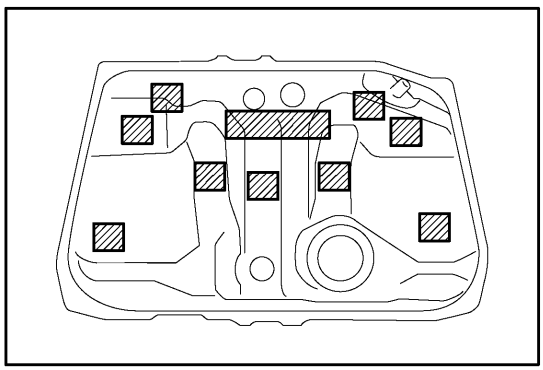

N·m (kgf·cm, ft·lbf): Specified torque

◆ Non–reusable part

A57125

1109P–01

Removal & Installation and Disassembly & Reassembly

1. REMOVE REAR SEAT CUSHION PAD

2. REMOVE REAR FLOOR SERVICE HOLE COVER
(See page 11–15)

3. WORK FOR PREVENTING GASOLINE FROM SPILLING OUT (See page 11–26)

4. REMOVE FUEL PUMP TUBE SUB–ASSY
(See page 11–15)

5. REMOVE FUEL TANK VENT TUBE SET PLATE

6. REMOVE FUEL SUCTION TUBE ASSY W/ PUMP & GAGE

7. DRAIN FUEL

8. REMOVE FLOOR PANEL BRACE REAR
(See page 15–2)

9. REMOVE EXHAUST PIPE ASSY CENTER

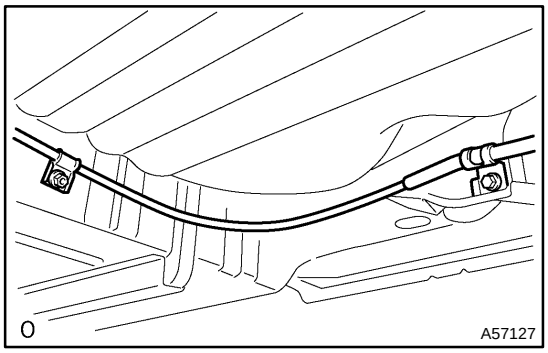

10. DISCONNECT PARKING BRAKE CABLE ASSY NO.2

(a) Remove the bolt and nut, and disconnect the parking brake cable.

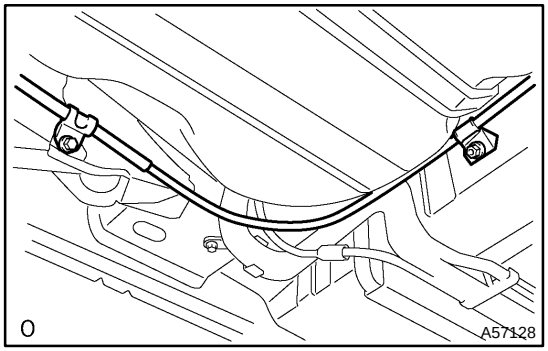

11. DISCONNECT PARKING BRAKE CABLE ASSY NO.3

(a) Remove the bolt and nut, and disconnect the parking brake cable.

12. REMOVE FUEL TANK PROTECTOR LOWER CENTER

(a) Remove the 4 bolts and the protector.

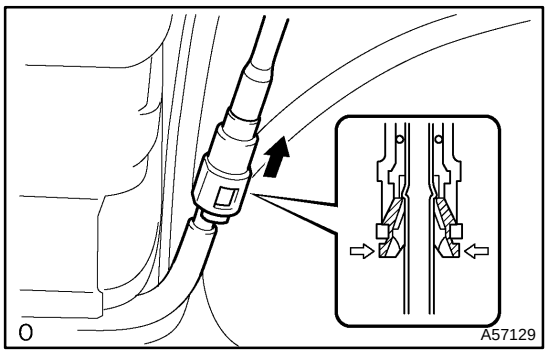

13. DISCONNECT FUEL PUMP TUBE SUB–ASSY

(a) Pinch the fuel pump tube connector clip and then pull out the tube.

NOTICE:

- **Check if there is any dirt like mud around the connector before this work and clean the dirt away.**
- **Be careful of dirt like mud because the quick connector has an O–ring to seal the pipe and the connector.**
- **Do not use any tool in this work.**
- **Do not bend or twist the nylon tube by force.**
- **After disconnecting the tube, cover the connector with a vinyl bag.**
- **When the connector and the pipe are stuck, pinch the tube between fingers, and turn it carefully to free and then disconnect the tube.**

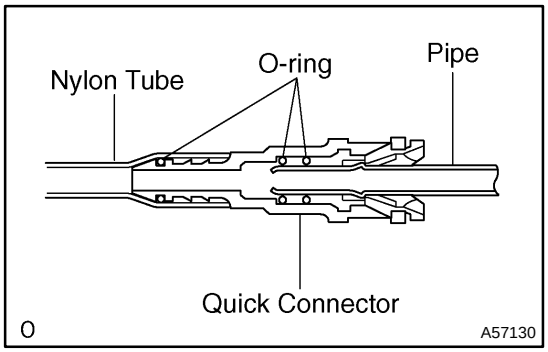

14. DISCONNECT FUEL TANK TO FILLER PIPE HOSE

(a) Disconnect the fuel tank to filler pipe hose from the fuel tank.

15. DISCONNECT FUEL TANK BREATHER HOSE

(a) Disconnect the fuel tank breather hose from the fuel tank.

16. REMOVE FUEL TANK ASSY

(a) Set the mission jack to the fuel tank.
(b) Remove the fuel tank bands.
(c) Disconnect the valve to fuel filler pipe hose from the fuel tank over fill check valve.
(d) Disconnect the fuel hose No. 3 from the fuel tank.

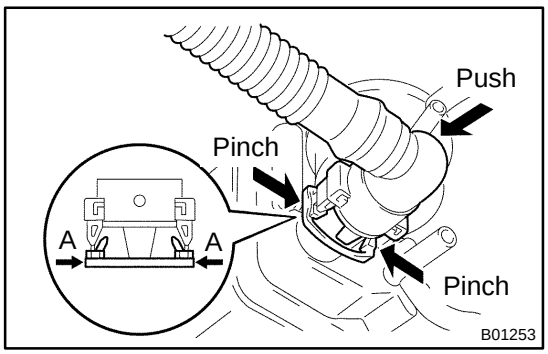

(e) Disconnect the vent line hose from the charcoal canister.
  (1) Push the connector deep inside.
  (2) Pinch portion A.
  (3) Pull out the connector.

(f) Disconnect the fuel emission hose from the charcoal canister.
(g) Carefully, remove the fuel tank assembly from the vehicle.

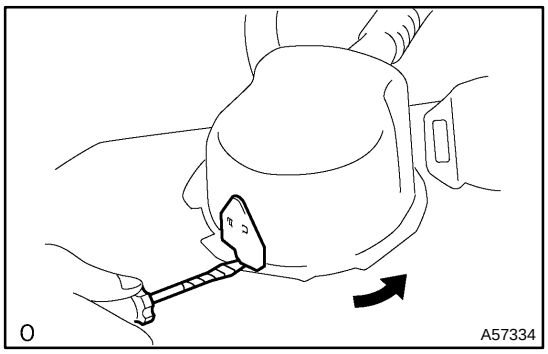

17. REMOVE FUEL TANK OVER FILL CHECK VALVE ASSY

(a) Using a screwdriver, unlock the claw and remove the protector by turning it counter clockwise.

(b) Insert a clip remover between the check valve and the gasket, remove the valve by gradually pushing it upward.

NOTICE:

- **Work accurately to maintain the sealing performance of the check valve, since it is made from resin. It is easy to damage by removing and installing forcibly.**
- **Be sure to install new check valve and gasket.**

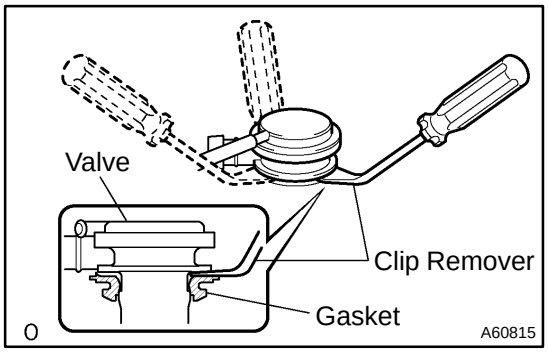

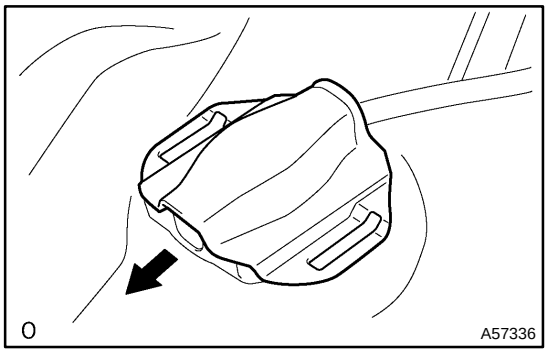

18. REMOVE FUEL TANK PROTECTOR NO.3

(a) Remove the fuel tank protector No. 3 by sliding as shown in the illustration.

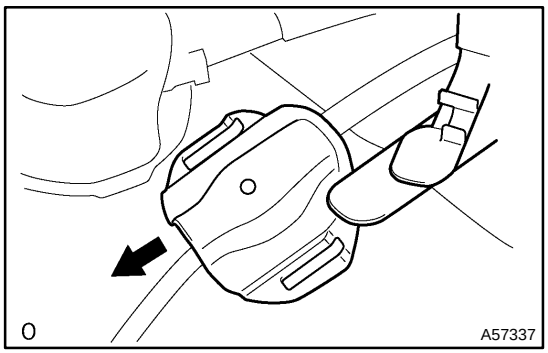

19. REMOVE FUEL TANK PROTECTOR SUB–ASSY NO.1

(a) Remove the fuel tank protector No. 1 by sliding as shown in the illustration.

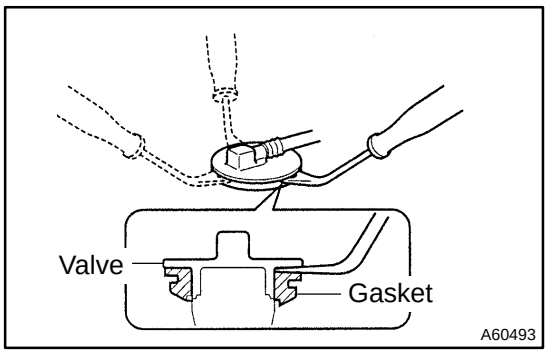

20. REMOVE FUEL CUT OFF W/TUBE VALVE ASSY

(a) Using a screwdriver, unlock the claw and remove the protector by turning it counter clockwise.

(b) Insert a clip remover between the cut off valve and the gasket, remove the cut off valve by gradually pushing it upward.

NOTICE:

- **Work accurately to maintain the sealing performance of the cut off valve, since it is made from resin. It is easy to damage by removing and installing forcibly.**
- **Be sure to install new cut off valve and gasket.**

21. REMOVE FUEL MAIN TUBE SUPPORT

22. REMOVE FUEL TANK CUSHION NO.1

23. REMOVE FUEL TANK CUSHION NO.2

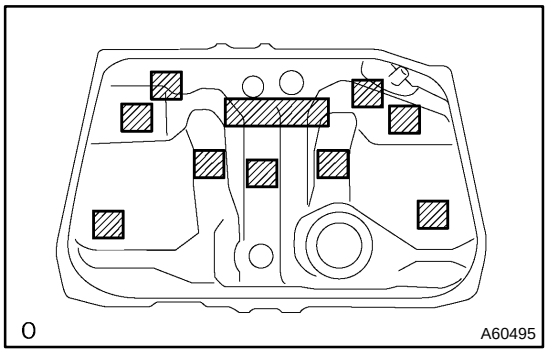

24. INSTALL FUEL TANK CUSHION NO.1

(a) Install new fuel tank cushions as shown in the illustration.

25. INSTALL FUEL TANK CUSHION NO.2

(a) Install new fuel tank cushion as shown in the illustration.

26. INSTALL FUEL MAIN TUBE SUPPORT

Torque: 5.4 N·m (55 kgf·cm, 48 in.·lbf)

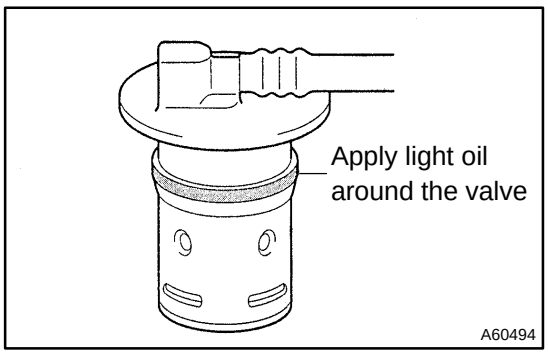

27. INSTALL FUEL CUT OFF W/TUBE VALVE ASSY

(a) Install a new gasket to the fuel tank.

(b) Apply light oil around the new fuel cut off valve as shown in the illustration, and insert it into the tank without force. Be careful not to drop the gasket into the tank.

(c) Check that the fuel cut off valve is fully inserted.

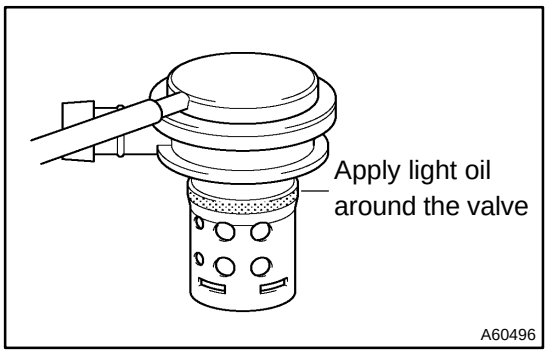

28. INSTALL FUEL TANK OVER FILL CHECK VALVE ASSY

(a) Install a new gasket to the fuel tank.
(b) Apply light oil around the new check valve as shown in the illustration, and insert it into the tank without force. Be careful not to drop the gasket into the tank.
(c) Check that the check valve is fully inserted.

29. INSTALL FUEL TANK ASSY

(a) Set the mission jack to the fuel tank.
(b) Install the fuel tank with the fuel tank bands.
Torque: 39 N·m (400 kgf·cm, 29 ft·lbf)

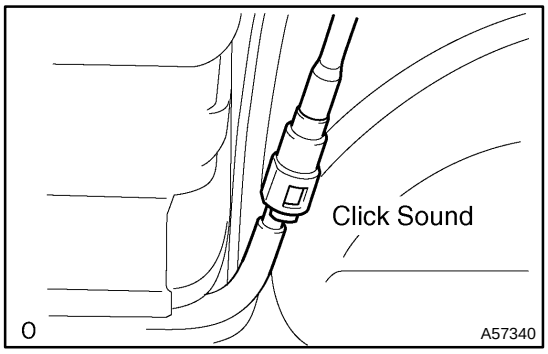

30. INSTALL FUEL PUMP TUBE SUB–ASSY

(a) Push in the fuel tube connector to the fuel pipe until connector makes a ”click” sound.

NOTICE:
- **Check if there is any damage or foreign objects on the connected part of the pipe.**
- **After connecting, check if the pipe and the connector are securely connected by pulling them.**

31. INSTALL FUEL TANK PROTECTOR LOWER CENTER

(a) Install the protector with the 4 bolts.
Torque: 5.4 N·m (55 kgf·cm, 48 in.·lbf)

32. INSTALL PARKING BRAKE CABLE ASSY NO.3

Torque: 5.4 N·m (55 kgf·cm, 48 in.·lbf)

33. INSTALL PARKING BRAKE CABLE ASSY NO.2

Torque: 5.4 N·m (55 kgf·cm, 48 in.·lbf)

34. INSTALL EXHAUST PIPE ASSY CENTER
(See page 15–2)

35. INSTALL FLOOR PANEL BRACE REAR
(See page 15–2)

36. INSTALL FUEL SUCTION TUBE ASSY W/ PUMP & GAGE (See page 11–15)

37. INSTALL FUEL TANK VENT TUBE SET PLATE
(See page 11–15)

38. INSTALL FUEL PUMP TUBE SUB–ASSY
(See page 11–15)

39. INSTALL REAR FLOOR SERVICE HOLE COVER
(See page 11–15)

40. INSPECT FUEL LEAK

41. CHECK EXHAUST LEAKAGE

FUEL SYSTEM (1MZ–FE)

1109E–01

PRECAUTION

1. PRECAUTION

(a) Before working on fuel system, disconnect negative (–) terminal cable from battery.

(b) Do not smoke or work near an open flame when working on fuel system.

(c) Keep gasoline away from rubber or leather parts.

2. WORK FOR PREVENT GASOLINE FROM SPILLING OUT

CAUTION:

- **Perform disconnecting operation of the fuel system parts after working for prevent gasoline form spilling out.**
- **As there is remained pressure in the fuel line after working for prevent gasoline from spilling out, prevent it from splashing inside the vehicle compartment by covering them with a shop rag.**

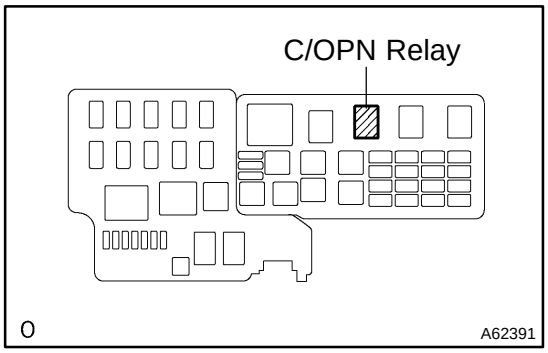

(a) Remove the circuit opening relay in the engine room relay block.

(b) Start the engine. After the engine has stopped on its own, turn the ignition switch OFF.

HINT:

There is a case that DTC P0171 (system to lean) is output.

(c) Check that the engine does not start.

(d) Remove the fuel tank cap, and let the air out of the fuel tank.

(e) Disconnect negative (–) terminal cable from battery.

(f) Reinstall the circuit opening relay.

3. FUEL SYSTEM

(a) When disconnecting the high fuel pressure line, a large amount of gasoline will spill out, so observe these procedures.

(1) Work for prevent gasoline from spilling out.

(2) Disconnect the fuel pump tube.
(See page 11–39)

(3) Drain the fuel remained inside the fuel pump tube.

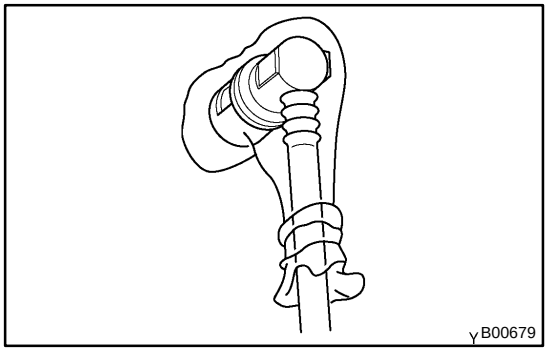

(4) Prevent the disconnected fuel pump tube from damaging and mixing foreign objects by covering them with a vinyl bag.

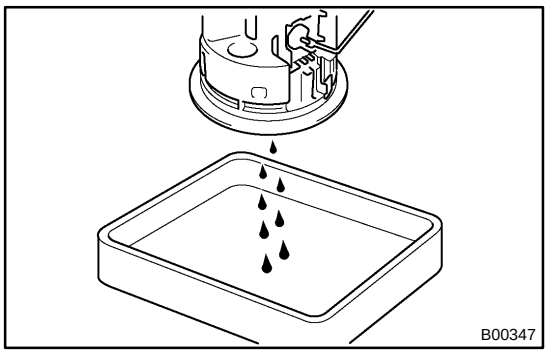

(5) Put a container under the connection.

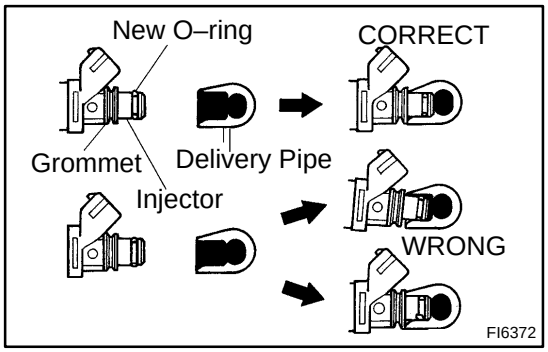

(b) Observe these precautions when removing and installing the injector.
(1) Never reuse the O–ring.
(2) When placing the new O–rings on the injector, take care not to damage it in any way.
(3) Coat a new O–rings with spindle oil or gasoline before installing. Never use engine, gear or brake oil.

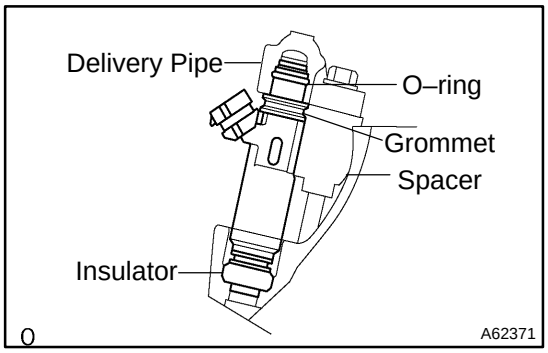

(c) Install the injector to the delivery pipe and intake manifold, as shown in the illustration. Before installing the injector, be sure to apply spindle oil or gasoline on the place where a delivery pipe or an intake manifold touches an O–ring of the injector.

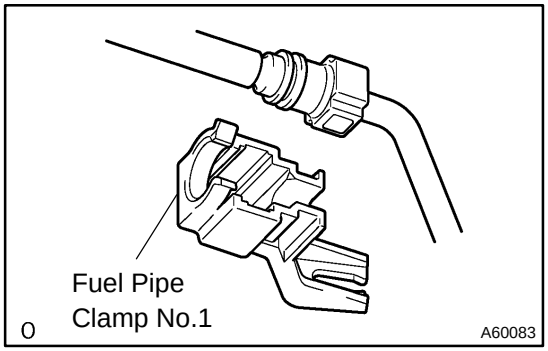

(d) Observe these precautions when disconnecting the fuel tube connector.
(1) Remove the fuel pipe clamp No.1.
(2) Check if there is any dirt like mud on the pipe and around the connector before disconnecting them and clean the dirt away.

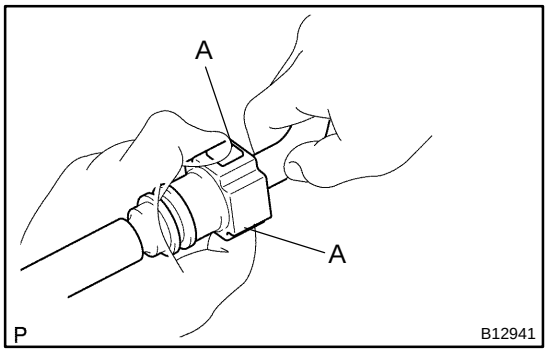

(3) Disconnect the connector from the hose while pinching part A with fingers as shown in the illustration.

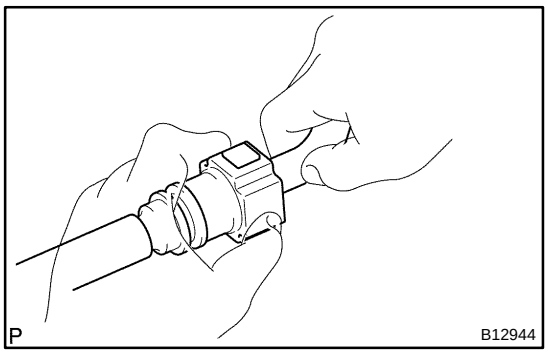

(4) When the connector and the pipe are stuck, pinch the fuel pipe between the hands, push and pull the connector to free to disconnect and pull it out. Do not use any tool at this time.

(5) Inspect if there is any dirt or the likes on the seal surface of the disconnected pipe and clean it away.

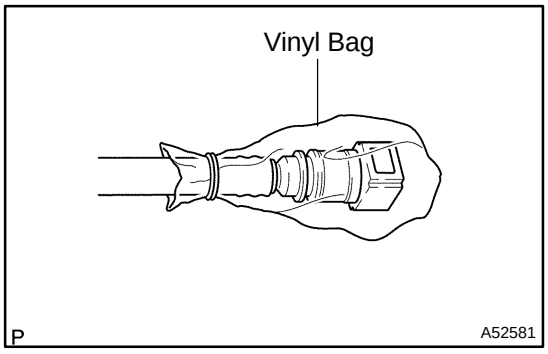

(6) Prevent the disconnected pipe and connector from damaging and mixing foreign objects by covering them with a vinyl bag.

4. CHECK FUEL LEAK

(a) Check that there are no fuel leaks after doing maintenance anywhere on the fuel system. (See page 11–29)

11027–02

ON–VEHICLE INSPECTION

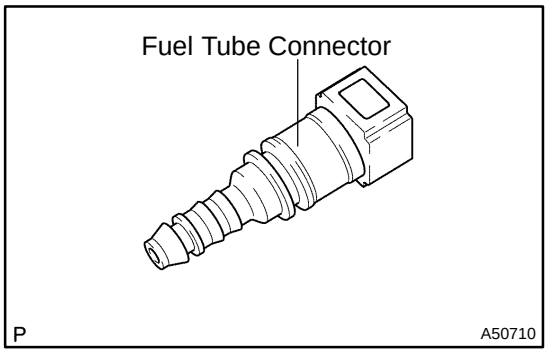

1. CHECK FUEL PRESSURE

(a) Prepare for inspection.

(1) Purchase the new No.1 fuel pipe and take out the fuel tube connector from its pipe.

HINT:

Part No. 23801–20140

(b) Work for prevent gasoline from spilling out.

(See page 11–26)

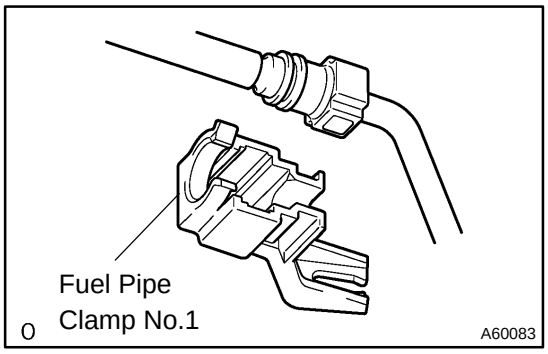

(c) Remove the fuel pipe clamp No.1 from the fuel tube connector.

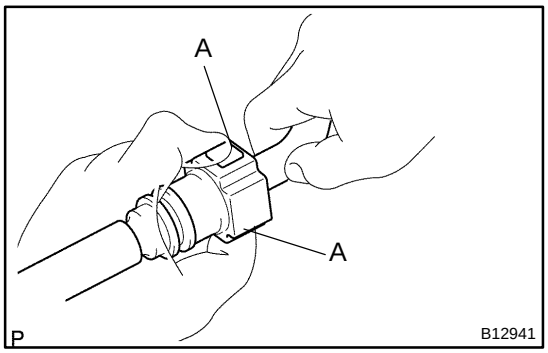

(d) Disconnect the fuel tube connector from the fuel pipe while pinching part A with fingers as shown in the illustration.

CAUTION:

- **Perform disconnecting operations of the fuel tube connector (quick type) after observing the precautions.**
- **As there is retained pressure in the fuel pipe line, prevent it from splashing inside the engine compartment.**

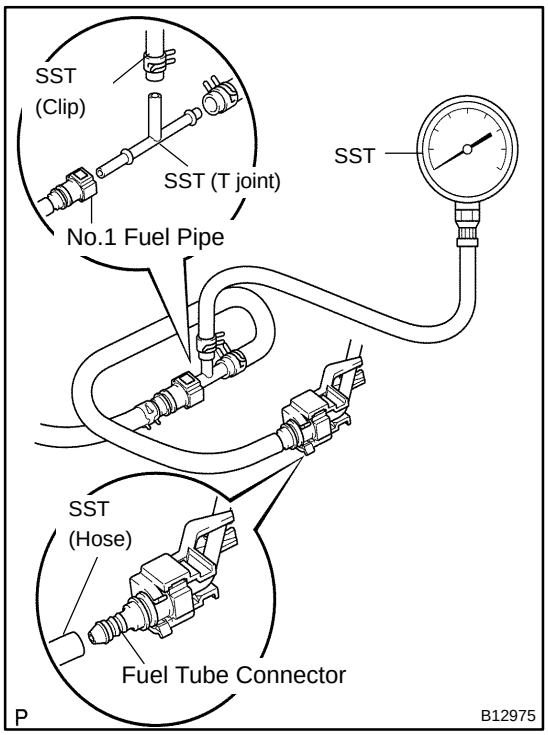

(e) Install SST (pressure gauge) as shown in the illustration by using SST and fuel tube connector.
SST 09268–41047 (95336–08070), 09268–45014 (09268–41250)

(f) Wipe off any splattered gasoline.

(g) Reconnect the negative (–) terminal cable to the battery.

(h) Connect the hand–hand tester to the DLC3.

(i) Measure the fuel pressure regulator.
Fuel pressure:
304 – 343 kPa (3.1 – 3.5 kgf/cm^2, 44 – 50 psi)

If pressure is high, replace the fuel pressure regulator.
If pressure is low, check the fuel hoses and connections, fuel pump, fuel filter and fuel pressure regulator.

(j) Disconnect the hand–held tester from the DLC3.

(k) Start the engine.

(l) Measure the fuel pressure at idle.
Fuel pressure:
304 – 343 kPa (3.1 – 3.5 kgf/cm^2, 44 – 50 psi)

(m) Stop the engine.

(n) Check that the fuel pressure remains as specified for 5 minutes after the engine has stopped.
Fuel pressure:147 kPa (1.5 kgf/cm^2, 21 psi) or more

If pressure is not as specified, check the fuel pump, pressure regulator and/or injectors.

(o) After checking fuel pressure, disconnect the negative (–) terminal cable from the battery and carefully remove the SST and fuel tube connector to prevent gasoline from splashing.

(p) Reconnect the No. 1 fuel pipe (fuel tube connector).

CAUTION:
Perform connecting operations of the fuel tube connector (quick type) after observing the precautions.

2. CHECK FUEL PUMP OPERATION AND FUEL LEAK

(a) When using hand–held tester
(1) Connect the hand–held tester to the DLC3.
(2) Turn the ignition switch ON and hand–held tester main switch ON.

NOTICE:
Do not start the engine.

(3) Select the active test mode on the hand–held tester.
(4) Please refer to the hand–held tester operator's manual for further details.

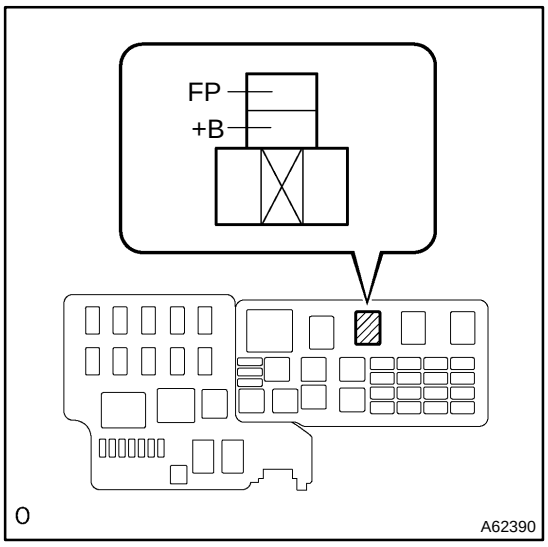

(b) When not using hand–held tester
  (1) Remove the circuit opening relay.
  (2) Using a service wire connect terminals FP and +B of the relay block.

NOTICE:

Pay due attention to the terminal connecting position to avoid a malfunction.

  (3) Turn the ignition switch ON, and check that the fuel pump operates.

NOTICE:

Do not start the engine.

(c) Check that there are no fuel leaks after doing maintenance anywhere on the fuel system.

11028–02

INSPECTION

1. FUEL INJECTOR ASSY

(a) Inspect injector resistance

(1) Using an ohmmeter, measure the resistance between the terminals.

Resistance:13.4 – 14.2 Ω at 20°C (68°F)

If the resistance is not as specified, replace the injector.

(b) Inspect injector inspection

CAUTION:

Keep injector clear of sparks during the test.

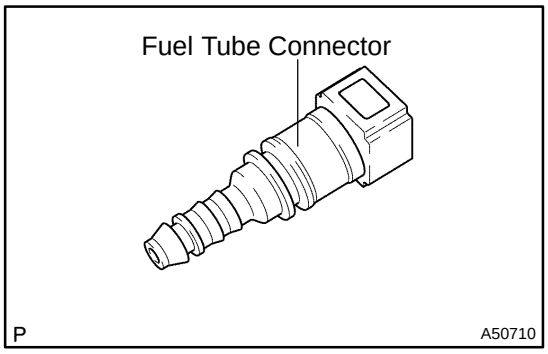

(1) Purchase the new No.1 fuel pipe and take out the fuel tube connector from its pipe.

HINT:

Part No. 23801 – 20140

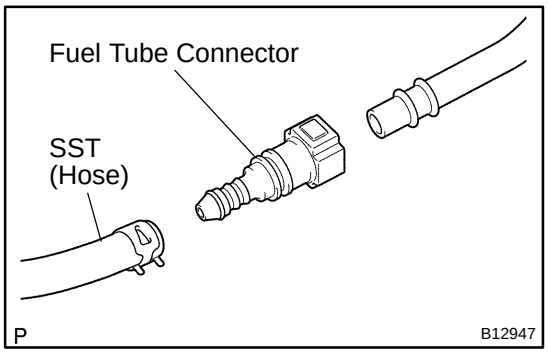

(2) Connect SST and fuel tube connector to the fuel pipe.

SST 09268–41047 (95336–08070)

CAUTION:

Perform connecting operations of the fuel tube connector (quick type) after observing the precautions.

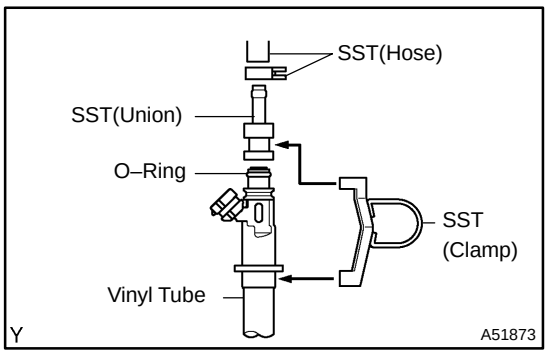

(3) Install the grommet and O–ring to the injector.

(4) Connect SST (union and hose) to the injector, and hold the injector and union with SST (clamp)

SST 09268–41047 (09268–41110, 09268–41300, 95336–08070)

(5) Put the injector into a graduated cylinder.

HINT:

Install a suitable vinyl tube onto the injector to prevent gasoline from splashing out.

(6) Operate the fuel pump.(See Page 11–29)

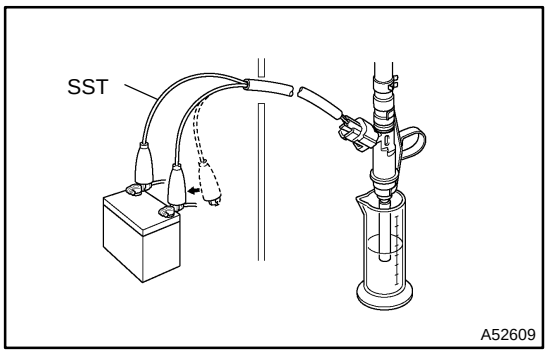

(7) Connect SST (wire) to the injector and battery for 15 seconds, and measure the injection volume with a graduated cylinder. Test each injector 2 or 3 time.

SST 09842–30070

Injection volume:

Injection volume	Difference between each injector
60 – 73 cm^3 (3.7 – 4.5 cu in.) per 15 seconds	13 cm^3 (0.8 cu in.) or less

NOTICE:

Always do the switching at the battery side.

If the injection volume is not as specified,replace the injector.

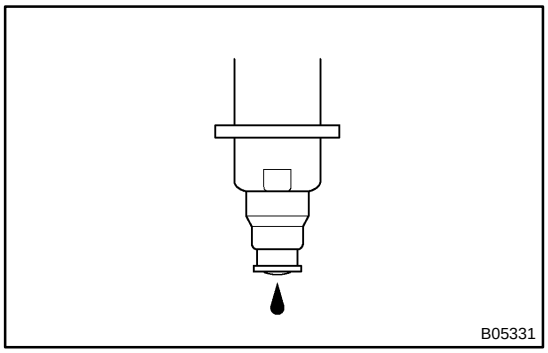

(c) Inspect leakage

(1) In the condition above, disconnect the test probes of SST (wire) from the battery and check the fuel leakage from the injector.

Fuel drop: 1 drop or less per 12 minutes

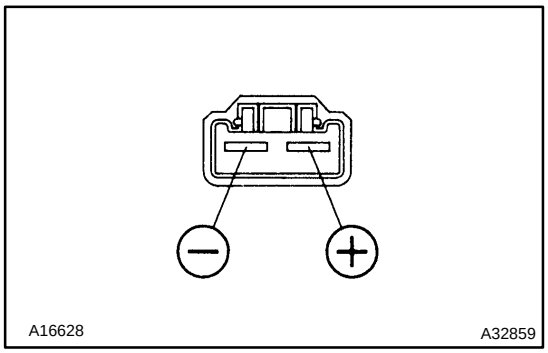

2. FUEL PUMP

(a) Inspect fuel pump resistance.

(1) Using an ohmmeter, measure the resistance between terminals.

Resistance: 0.2 – 3.0 Ω at 20°C (68°F)

(b) Inspect fuel pump operation

(1) Apply battery voltage to both terminals. Check that the pump operates.

NOTICE:

- **These tests must be done quickly (within 10 seconds) to prevent the coil from burning out.**
- **Keep fuel pump as far away from the battery as possible.**
- **Always do the switching at the battery side.**

FUEL INJECTOR ASSY (1MZ–FE)

1109F–01

COMPONENTS

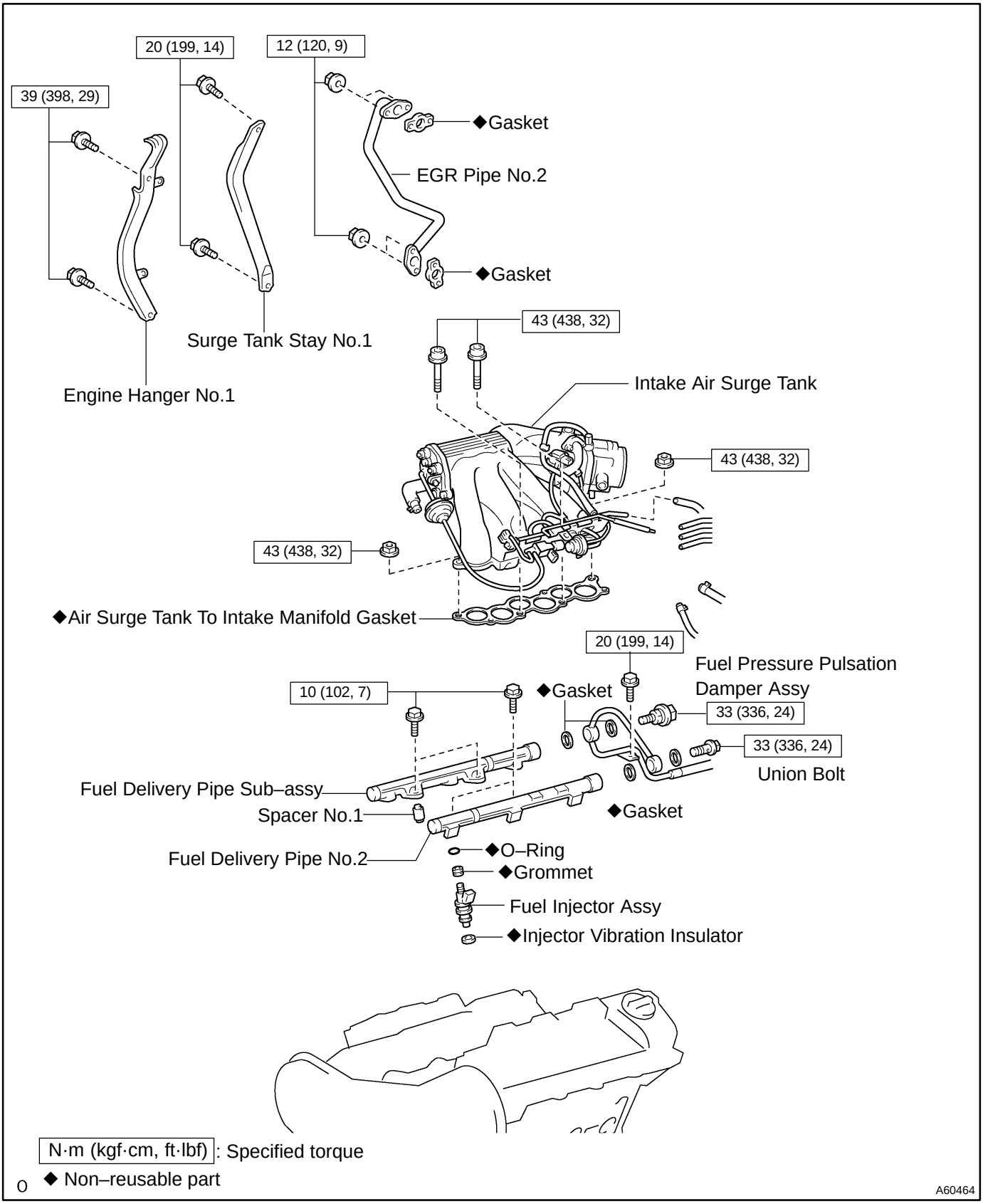

REPLACEMENT

1. **WORK FOR PREVENTING GASOLINE FROM SPILLING OUT (See page 11–26)**
2. **DRAIN COOLANT (See page 16–20)**
3. **REMOVE V–BANK COVER SUB–ASSY (See page 14–155)**
4. **REMOVE BATTERY**
5. **REMOVE AIR CLEANER ASSEMBLY WITH HOSE (See page 10–12)**
6. **REMOVE FRONT SUSPENSION UPPER BRACE CENTER (W/ FRONT SUSPENSION BRACE UPPER CENTER)**
7. **REMOVE INTAKE AIR SURGE TANK (See page 14–142)**

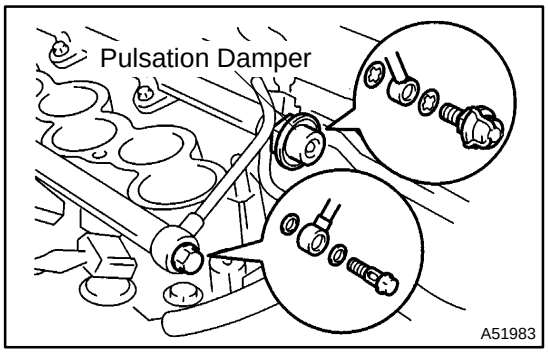

8. SEPARATE FUEL PIPE SUB–ASSY NO.1

(a) Remove the pulsation damper and 2 gaskets.
(b) Remove the bolt and 2 gaskets.
(c) Remove the bolt and disconnect the fuel pipe sub–assembly No. 1 from the intake manifold.

9. REMOVE FUEL INJECTOR ASSY

(a) Disconnect the injector connectors.
(b) Remove the 2 bolts and fuel delivery pipe, while pulling out both ends of the fuel delivery pipe equally.
(c) While turning the injector clockwise and counterclockwise, pull out the injector from the delivery pipe.

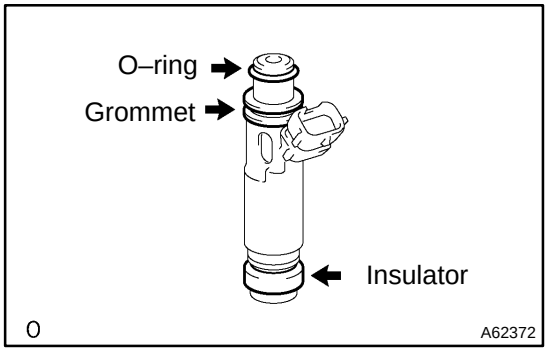

10. INSTALL FUEL INJECTOR ASSY

(a) Apply a light coat of gasoline to a new O–ring and install them to each injectors.
(b) While turning the injector clockwise and counterclockwise, install it to the delivery pipe.
(c) Check that the injectors rotate smoothly.

NOTICE:

If injectors do not rotate smoothly, the probable cause is incorrect installation of the O–rings. Replace new O–rings.

(d) Install the delivery pipe with the injectors.
Torque: 10 N·m (102 kgf·cm, 7 ft·lbf)

NOTICE:

- **Be careful not to drop the injectors when installing the delivery pipe.**
- **Check that the injectors rotate smoothly after installing the delivery pipe.**

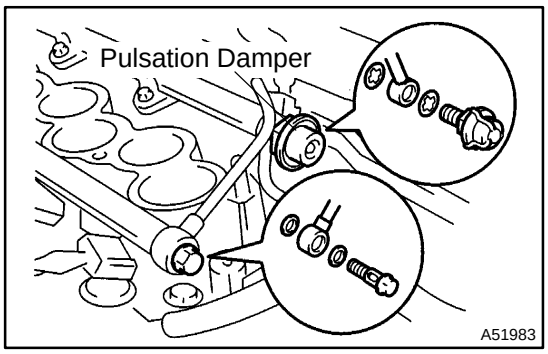

11. INSTALL FUEL PIPE SUB–ASSY NO.1

(a) Install the fuel pipe No. 1 with the 2 new pulsation damper gaskets and the pulsation damper.
Torque: 33 N·m (336 kgf·cm, 24 ft·lbf)

(b) Install the delivery pipe with 2 new fuel pipe No. 1 gaskets and a bolt to the fuel pipe No. 1.
Torque: 33 N·m (336 kgf·cm, 24 ft·lbf)

(c) Install the fuel pipe No. 1 to the intake manifold with a bolt.
Torque: 20 N·m (199 kgf·cm, 14 ft·lbf)

12. INSTALL INTAKE AIR SURGE TANK (See page 14–142)

13. INSTALL FRONT SUSPENSION UPPER BRACE CENTER (W/ FRONT SUSPENSION BRACE UPPER CENTER)

Torque: 80 N·m (816 kgf·cm, 59 ft·lbf)

14. INSTALL AIR CLEANER ASSEMBLY WITH HOSE (See page 10–12)

15. INSTALL V–BANK COVER SUB–ASSY (See page 14–155)

16. ADD COOLANT (See page 16–20)

17. CHECK ENGINE COOLANT LEAK (See page 16–20)

18. INSPECT FUEL LEAK

FUEL PUMP ASSY (1MZ–FE)

1109G–01

COMPONENTS

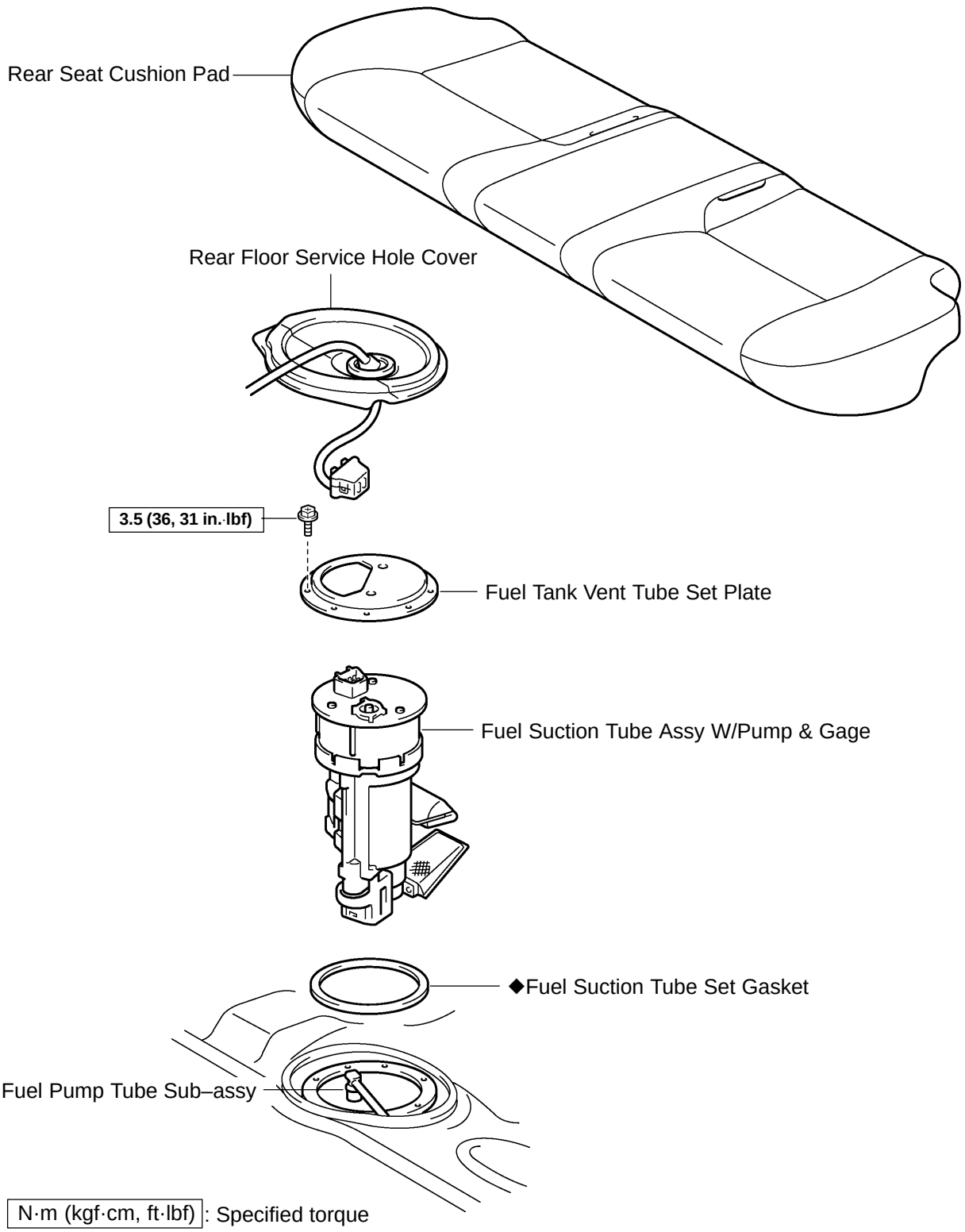

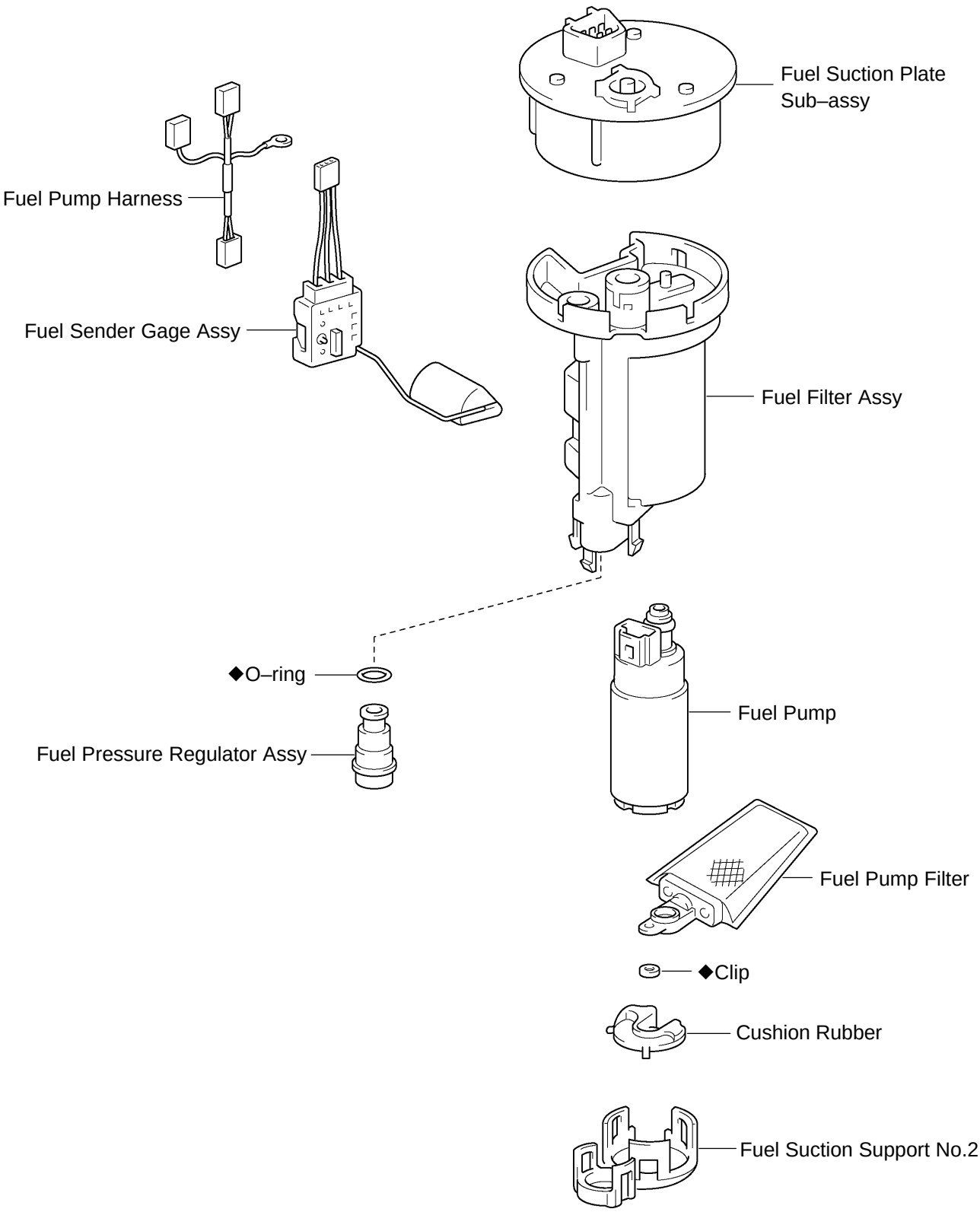
Fuel Suction Plate Sub–assy
Fuel Pump Harness
Fuel Sender Gage Assy
Fuel Filter Assy
◆O–ring
Fuel Pump
Fuel Pressure Regulator Assy
Fuel Pump Filter
◆Clip
Cushion Rubber
Fuel Suction Support No.2
o ◆ Non–reusable part
A57123

Removal & Installation and Disassembly & Reassembly

1. REMOVE REAR SEAT CUSHION PAD

2. REMOVE REAR FLOOR SERVICE HOLE COVER

(a) Remove the service hole cover.
(b) Disconnect the fuel pump connector.

3. WORK FOR PREVENTING GASOLINE FROM SPILLING OUT (See page 11–26)

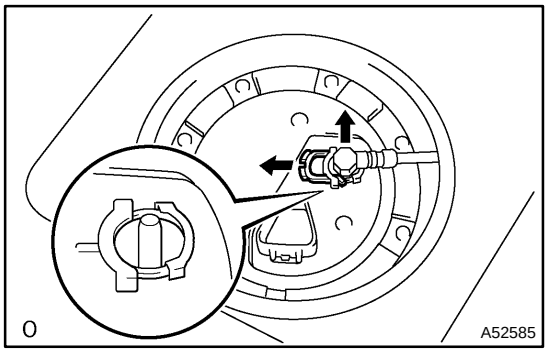

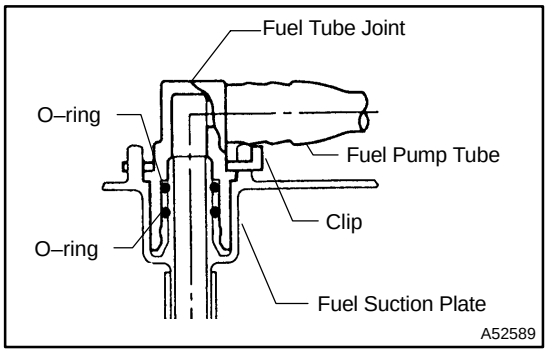

4. DISCONNECT FUEL PUMP TUBE SUB–ASSY

(a) Check if there is any dirt like mud around the connector before this work and clean dirt away.
(b) Remove the joint clip, and pull out the fuel pump tube.

NOTICE:

- **Be careful of dirt like mud because the quick connector has an O–ring to seal the pipe and the connector.**
- **Do not use any tool in this work.**
- **Do not bend or twist the nylon tube by force.**
- **Keep off plug from foreign objects.**
- **To protect the fuel tube, cover it with a vinyl bag after checking.**

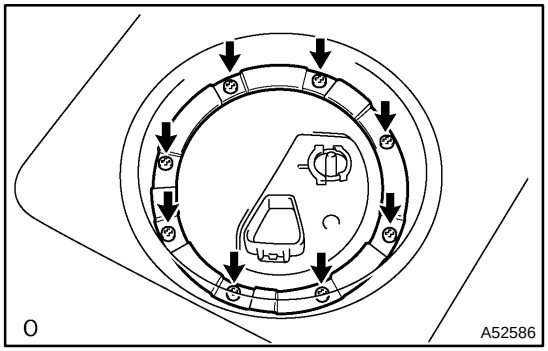

5. REMOVE FUEL TANK VENT TUBE SET PLATE

(a) Remove the 8 bolts and fuel tank vent tube set plate.

6. REMOVE FUEL SUCTION TUBE ASSY W/ PUMP & GAGE

(a) Pull out the fuel suction tube w/pump & gage from the fuel tank.

NOTICE:

- **Do not damage the fuel pump filter.**
- **Be careful that the arm of the sender gauge should not bent.**

(b) Remove the fuel suction tube gasket.

7. REMOVE FUEL SUCTION SUPPORT NO.2

(a) Using a screwdriver, disconnect the snap claws from the claw holes and remove the fuel suction support No.2.

8. REMOVE FUEL PUMP CUSHION RUBBER

9. REMOVE FUEL PRESSURE REGULATOR ASSY

10. REMOVE FUEL PUMP ASSY W/FILTER

(a) Disconnect the fuel pump connector from the fuel pump.
(b) Pull out the fuel filter and the fuel pump assembly.

11. REMOVE FUEL PUMP FILTER

(a) Using a screwdriver, remove the fuel pump filter clip and the fuel pump filter.

12. REMOVE FUEL SUCTION PLATE SUB–ASSY

(a) Using a screwdriver, disconnect the snap claws from the claw holes and remove the fuel suction plate.

13. REMOVE FUEL SENDER GAGE ASSY

(a) Unlock the sender gage, and move it downward to remove.

14. REMOVE FUEL PUMP HARNESS

(a) Disconnect the connector, and remove the fuel pump harness.

15. INSTALL FUEL SENDER GAGE ASSY

(a) Lock the sender gage by pushing it upward.

NOTICE:
By pushing the sender gage downward, confirm that it is certainly locked.

16. INSTALL FUEL PUMP FILTER

(a) Install the fuel pump filter with a new fuel pump filter clip.

17. INSTALL FUEL PRESSURE REGULATOR ASSY

(a) Apply gasoline to a new O–ring, and install it to the pressure regulator.
(b) Insert the pressure regulator.

18. INSTALL FUEL SUCTION TUBE ASSY W/ PUMP & GAGE

(a) Install a new gasket and fuel suction tube w/pump & gage.

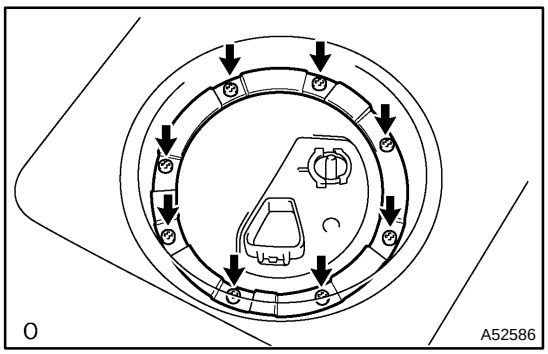

19. INSTALL FUEL TANK VENT TUBE SET PLATE

(a) Install the fuel tank vent tube set plate with the 8 bolts.
Torque: 3.5 N·m (36 kgf·cm, 31 in.·lbf)

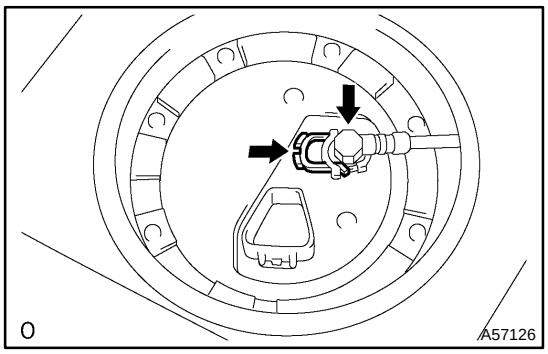

20. INSTALL FUEL PUMP TUBE SUB–ASSY

(a) Connect the main tube with the tube joint clip.

NOTICE:

- **Check that there is no scratch or foreign objects on the connecting part.**
- **Check that the connector is inserted fully and securely.**
- **Check that the clip of the tube joint is on the collar of the connector.**
- **After installing the clip of the tube joint, check that the connector is not pulled off.**

21. INSTALL REAR FLOOR SERVICE HOLE COVER

(a) Using a new butyl tape set, and install the rear floor service hole cover.

22. INSPECT FUEL LEAK

FUEL TANK ASSY (1MZ–FE)

COMPONENTS

1109I–01

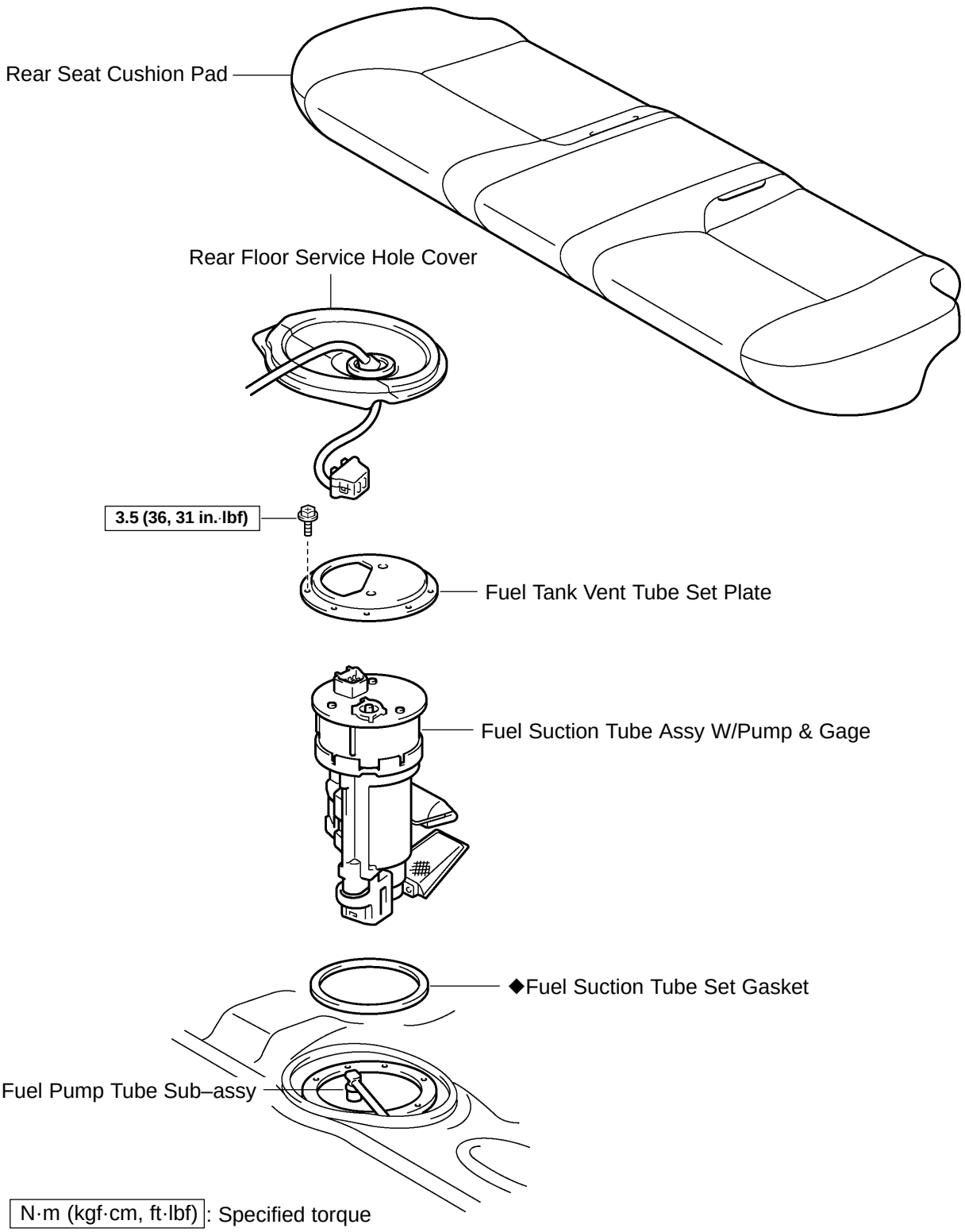

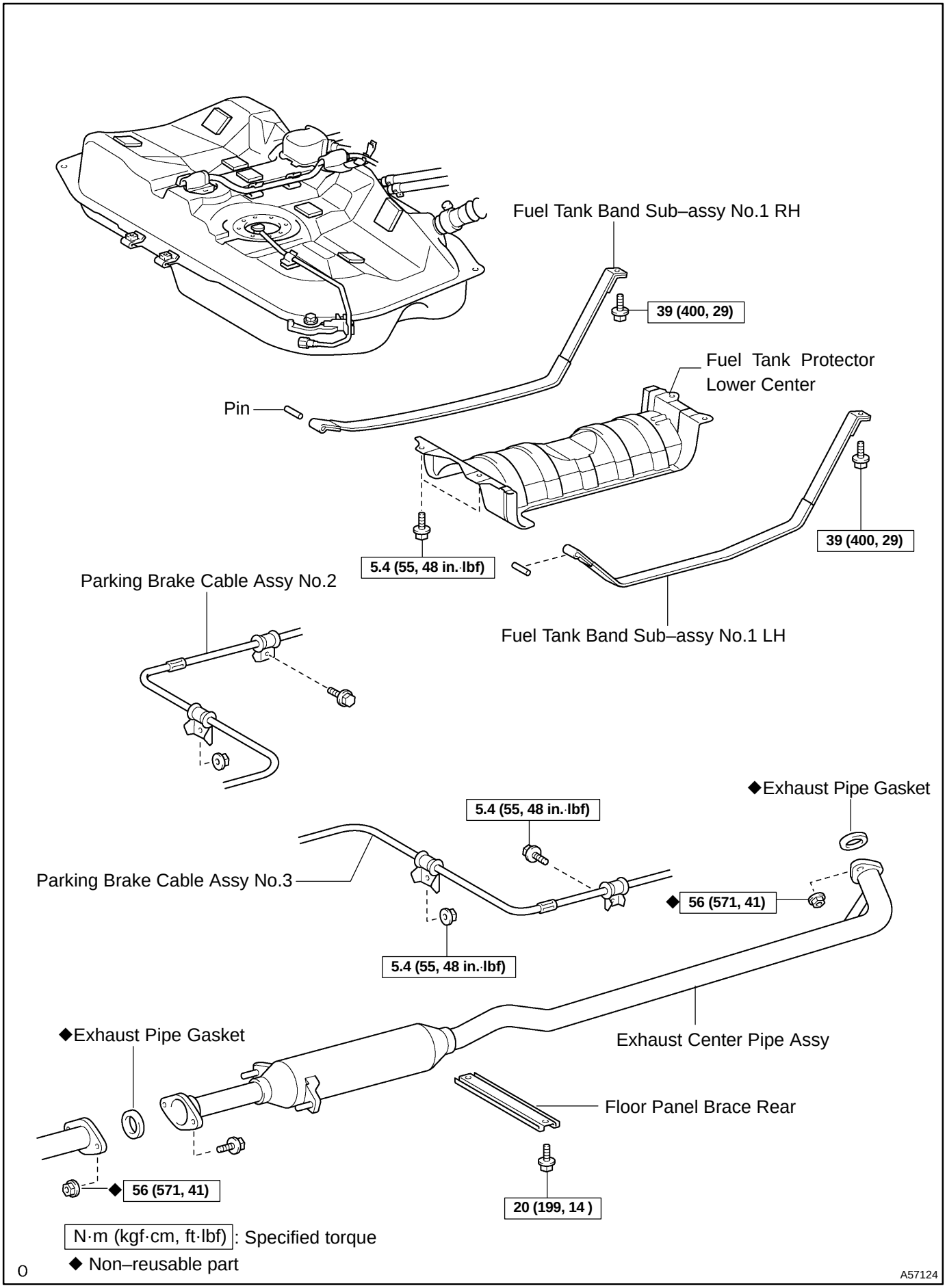
Fuel Tank Band Sub–assy No.1 RH
39 (400, 29)
Fuel Tank Protector Lower Center
Pin
5.4 (55, 48 in.·lbf)
39 (400, 29)
Parking Brake Cable Assy No.2
Fuel Tank Band Sub–assy No.1 LH
◆Exhaust Pipe Gasket
5.4 (55, 48 in.·lbf)
Parking Brake Cable Assy No.3
◆ 56 (571, 41)
5.4 (55, 48 in.·lbf)
◆Exhaust Pipe Gasket
Exhaust Center Pipe Assy
Floor Panel Brace Rear
◆ 56 (571, 41)
20 (199, 14)
N·m (kgf·cm, ft·lbf): Specified torque
◆ Non–reusable part
A57124

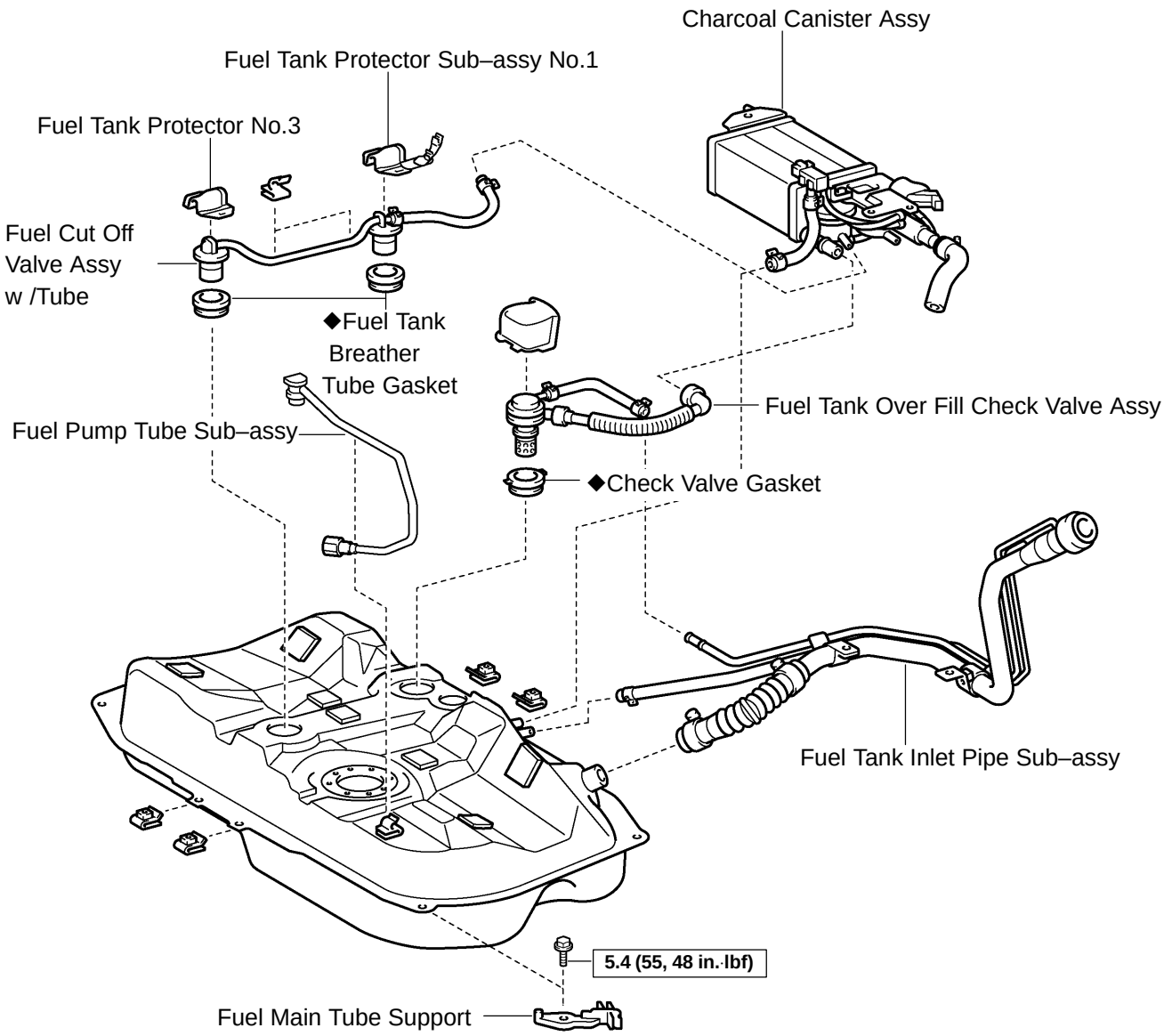

Location of Fuel Tank Cushion

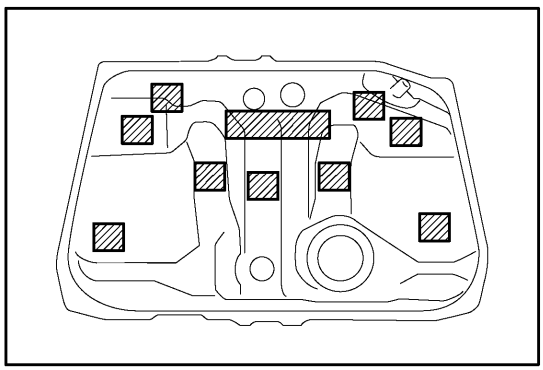

N·m (kgf·cm, ft·lbf): Specified torque

◆ Non–reusable part

A57125

1109J–01

Removal & Installation and Disassembly & Reassembly

1. REMOVE REAR SEAT CUSHION PAD

2. REMOVE REAR FLOOR SERVICE HOLE COVER
(See page 11–39)
3. WORK FOR PREVENTING GASOLINE FROM SPILLING OUT (See page 11–26)
4. DISCONNECT FUEL PUMP TUBE SUB–ASSY
(See page 11–39)
5. REMOVE FUEL TANK VENT TUBE SET PLATE
(See page 11–39)
6. REMOVE FUEL SUCTION TUBE ASSY W/ PUMP & GAGE (See page 11–39)
7. DRAIN FUEL
8. REMOVE FLOOR PANEL BRACE REAR
(See page 15–5)
9. REMOVE EXHAUST PIPE ASSY CENTER

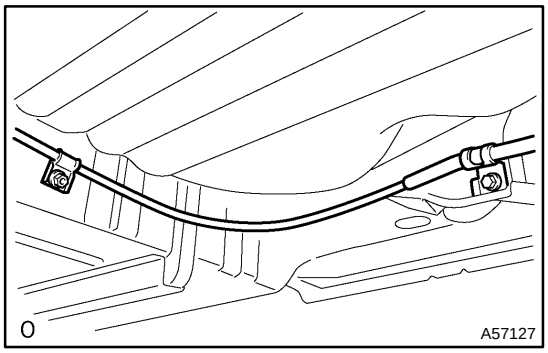

10. DISCONNECT PARKING BRAKE CABLE ASSY NO.2

(a) Remove the bolt and nut, and disconnect the parking brake cable.

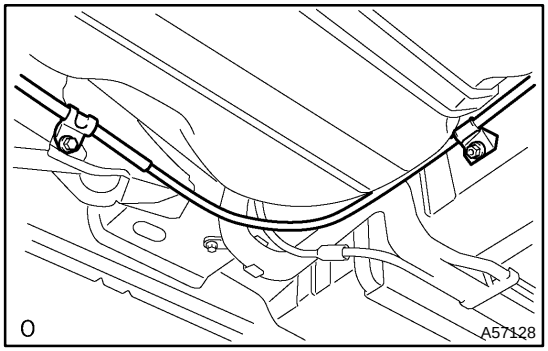

11. DISCONNECT PARKING BRAKE CABLE ASSY NO.3

(a) Remove the bolt and nut, and disconnect the parking brake cable.

12. REMOVE FUEL TANK PROTECTOR LOWER CENTER

(a) Remove the 4 bolts and remove the protector.

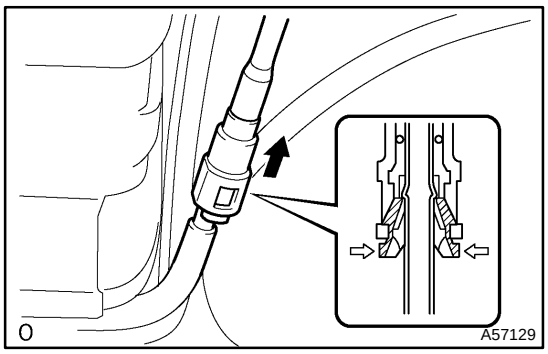

13. DISCONNECT FUEL PUMP TUBE SUB–ASSY

(a) Pinch the fuel pump tube connector clip and then pull out the tube.

NOTICE:

- **Check if there is any dirt like mud around the connector before this work and clean the dirt away.**
- **Be careful of dirt like mud because the quick connector has an O–ring to seal the pipe and the connector.**
- **Do not use any tool in this work.**
- **Do not bend or twist the nylon tube by force.**
- **After disconnecting the tube, cover the connector with a vinyl bag.**
- **When the connector and the pipe are stuck, pinch the tube between fingers, and turn it carefully to free and then disconnect the tube.**

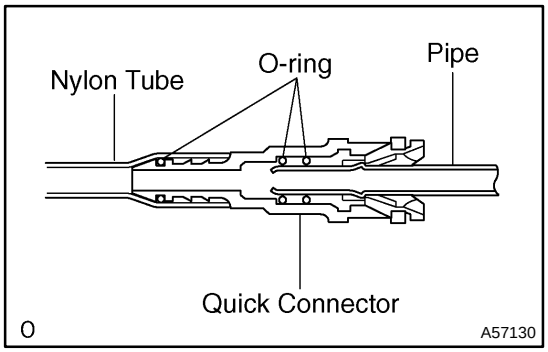

14. DISCONNECT FUEL TANK TO FILLER PIPE HOSE

(a) Disconnect the fuel tack to filler pipe hose from the fuel tank.

15. DISCONNECT FUEL TANK BREATHER HOSE

(a) Disconnect the fuel tank breather hose from the fuel tank.

16. REMOVE FUEL TANK ASSY

(a) Set the mission jack to the fuel tank.
(b) Remove the fuel tank bands.
(c) Disconnect the valve to fuel filler pipe hose from the fuel tank over fill check valve.
(d) Disconnect the fuel hose No. 3 from the fuel tank.

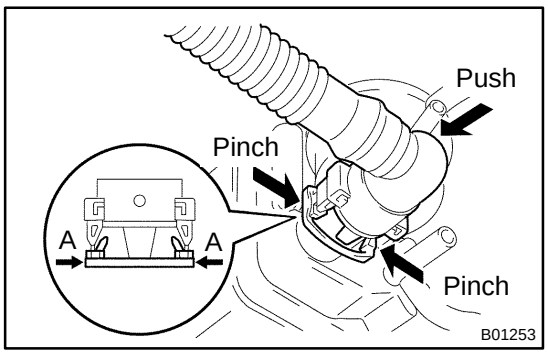

(e) Disconnect the vent line hose from the charcoal canister.
  (1) Push the connector deep inside.
  (2) Pinch portion A.
  (3) Pull out the connector.

(f) Disconnect the fuel emission hose from the charcoal canister.
(g) Carefully, remove the fuel tank assembly from the vehicle.

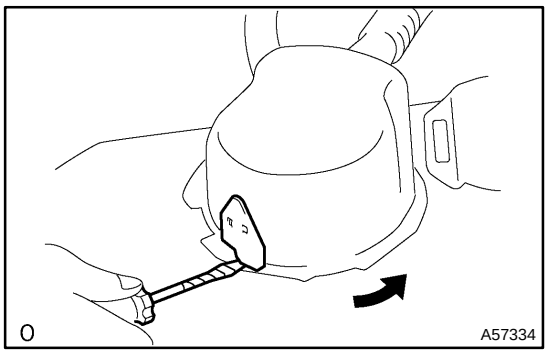

17. REMOVE FUEL TANK OVER FILL CHECK VALVE ASSY

(a) Using a screwdriver, unlock the claw and remove the protector by turning it counter clockwise.

(b) Insert a clip remover between the check valve and the gasket, remove the valve by gradually pushing it upward.

NOTICE:

- **Work accurately to maintain the sealing performance of the check valve, since it is made from resin. It is easy to damage by removing and installing forcibly.**
- **Be sure to install new check valve and gasket.**

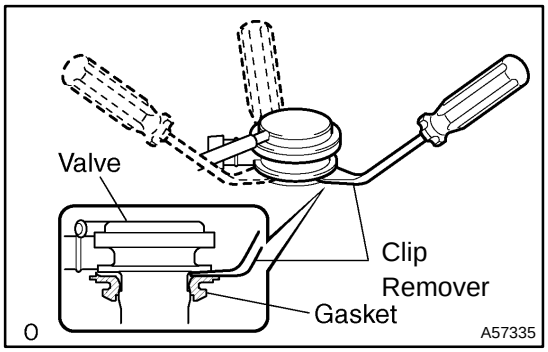

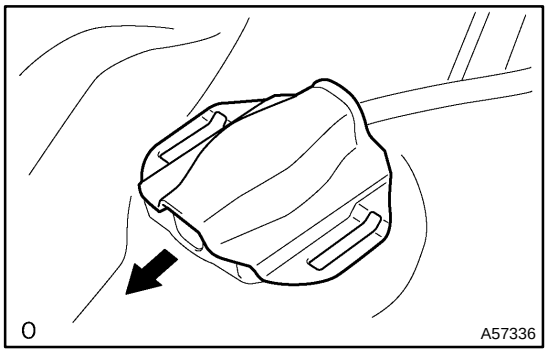

18. REMOVE FUEL TANK PROTECTOR NO.3

(a) Remove the fuel tank protector No. 3 by sliding as shown in the illustration.

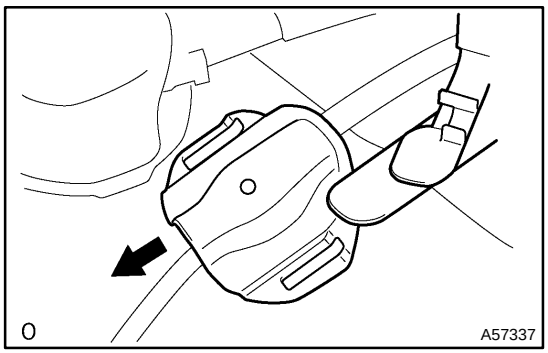

19. REMOVE FUEL TANK PROTECTOR SUB–ASSY NO.1

(a) Remove the fuel tank protector No. 1 by sliding as shown in the illustration.

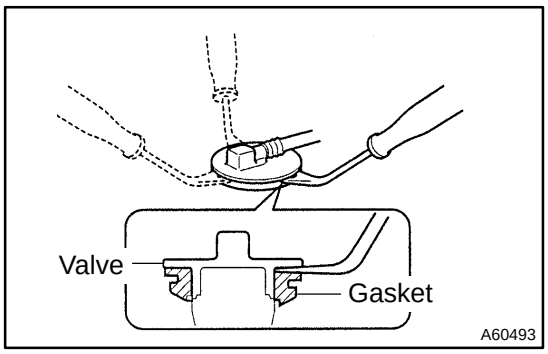

20. REMOVE FUEL CUT OFF W/TUBE VALVE ASSY

(a) Using a screwdriver, unlock the claw and remove the protector by turning it counter clockwise.

(b) Insert a clip remover between the cut off valve and the gasket, remove the cut off valve by gradually pushing it upward.

NOTICE:

- **Work accurately to maintain the sealing performance of the cut off valve, since it is made from resin. It is easy to damage by removing and installing forcibly.**
- **Be sure to install new cut off valve and gasket.**

21. REMOVE FUEL MAIN TUBE SUPPORT

22. REMOVE FUEL TANK CUSHION NO.1

23. REMOVE FUEL TANK CUSHION NO.2

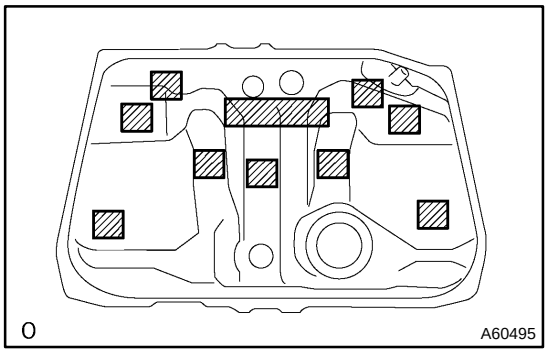

24. INSTALL FUEL TANK CUSHION NO.1

(a) Install new fuel tank cushions as shown in the illustration.

25. INSTALL FUEL TANK CUSHION NO.2

(a) Install new fuel tank cushions as shown in the illustration.

26. INSTALL FUEL MAIN TUBE SUPPORT

Torque: 5.4 N·m (55 kgf·cm, 48 in.·lbf)

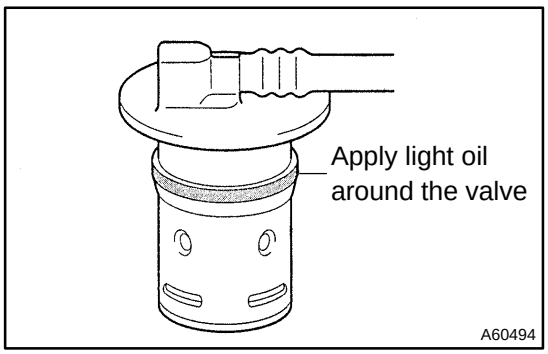

27. INSTALL FUEL CUT OFF W/TUBE VALVE ASSY

(a) Install a new gasket to the fuel tank.

(b) Apply light oil around the new fuel cut off valve as shown in the illustration, and insert it into the tank without force. Be careful not to drop the gasket into the tank.

(c) Check that the fuel cut off valve is fully inserted.

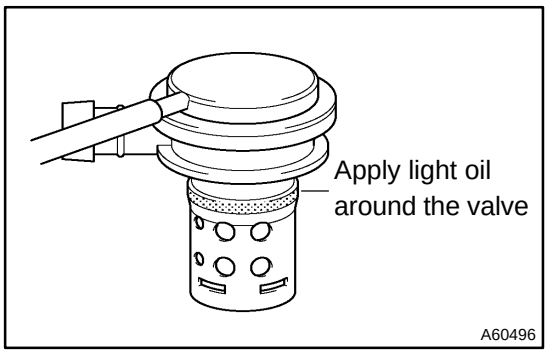

28. INSTALL FUEL TANK OVER FILL CHECK VALVE ASSY

(a) Install a new gasket to the fuel tank.
(b) Apply light oil around the new check valve as shown in the illustration, and insert it into the tank without force. Be careful not to drop the gasket into the tank.
(c) Check that the check valve is fully inserted.

29. INSTALL FUEL TANK ASSY

(a) Set the mission jack to the fuel tank.
(b) Install the fuel tank with the fuel tank bands.
Torque: 39 N·m (400 kgf·cm, 29 ft·lbf)

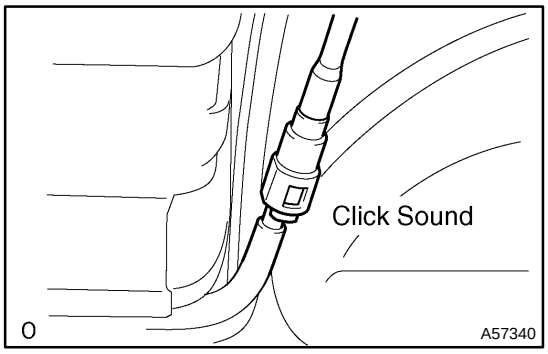

30. INSTALL FUEL PUMP TUBE SUB–ASSY

(a) Push in the fuel tube connector to the fuel pipe until connector makes a ”click” sound.

NOTICE:
- **Check if there is any damage or foreign objects on the connected part of the pipe.**
- **After connecting, check if the pipe and the connector are securely connected by pulling them.**

31. INSTALL FUEL TANK PROTECTOR LOWER CENTER

(a) Install the protector with the 4 bolts.
Torque: 5.4 N·m (55 kgf·cm, 48 in.·lbf)

32. INSTALL PARKING BRAKE CABLE ASSY NO.3

Torque: 5.4 N·m (55 kgf·cm, 48 in.·lbf)

33. INSTALL PARKING BRAKE CABLE ASSY NO.2

Torque: 5.4 N·m (55 kgf·cm, 48 in.·lbf)

34. INSTALL EXHAUST PIPE ASSY CENTER
(See page 15–5)

35. INSTALL FLOOR PANEL BRACE REAR
(See page 15–5)

36. INSTALL FUEL SUCTION TUBE ASSY W/ PUMP & GAGE (See page 11–39)

37. INSTALL FUEL TANK VENT TUBE SET PLATE
(See page 11–39)

38. INSTALL FUEL PUMP TUBE SUB–ASSY
(See page 11–39)

39. INSTALL REAR FLOOR SERVICE HOLE COVER
(See page 11–39)

40. INSPECT FUEL LEAK

41. CHECK EXHAUST LEAKAGE

EMISSION CONTROL SYSTEM (2AZ–FE)

12032–02

ON–VEHICLE INSPECTION

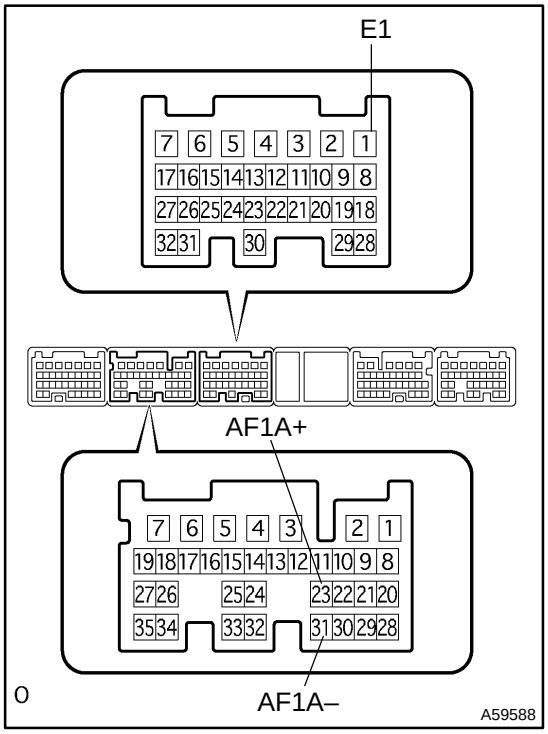

1. INSPECT AIR–FUEL RATIO COMPENSATION SYSTEM

(a) Measure voltage between terminals of the engine ECM.
Standard voltage:

Terminal	Condition	Voltage
AF1A+ ⇔ E1	IG switch ON	3.3 V
AF1A– ⇔ E1	IG switch ON	3.0 V

CAUTION:
Connect test leads from the back side of the connector with the ECM connected.

HINT:
Voltage between terminals of the engine ECM is kept constant regardless of the voltage of A/F sensor.

(b) Connect the hand–held tester to the DLC3.
(c) Select ”DATA MONITOR” – ”A/FS B1 S1”, ”A/FS B2 S1” and ”O2S B1 S2” to display the monitor.
(d) Warm up the A/F sensor with the engine speed at 2,500 r.p.m for approx. 2 minutes.

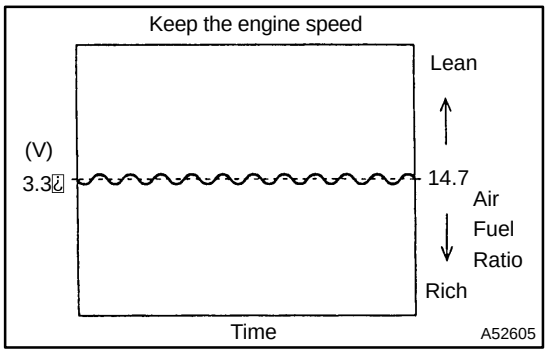

(e) Keep the engine speed at 2,500 r.p.m and confirm that the displays of ”A/FS B1 S1” and ”A/FS B2 S1” are as shown in the illustration.

CAUTION:
- **The illustration differs from the real display.**
- **Only hand–held tester displays the waveform of A/F sensor.**

(f) Confirm that the display of ”O2S B1 S2” changes between 0V to 1V with the engine speed at 2,500 r.p.m.

2. INSPECT FUEL CUT OFF RPM

(a) Increase the engine speed to at least 3,500 r.p.m.
(b) Use a sound scope to check for injector operating noise.
(c) Check that when the throttle lever is released, injector operation noise stops momentarily and then resumes.

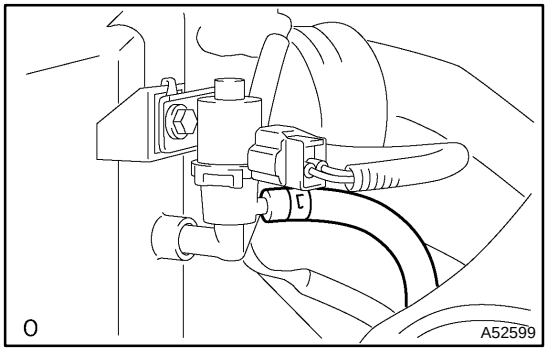

3. INSPECT EVAPORATIVE EMISSION CONTROL SYSTEM

(a) After starting the engine, disconnect the vacuum hose shown in the illustration.
(b) Confirm vacuum occurs at the vsv port, when choosing ”ACTIVE TEST” and ”PURGE VSV” according to the display on hand–held tester.
(c) Finish ”ACTIVE TEST”, then connect the vacuum hose again.

(d) After going to ”ECM DATA MONITOR” on the hand–held tester, choose ”PURGE VSV” to check the operation of the purge VSV.

(e) After warm up the engine and drive the vehicle, confirm the VSV turns on from off.

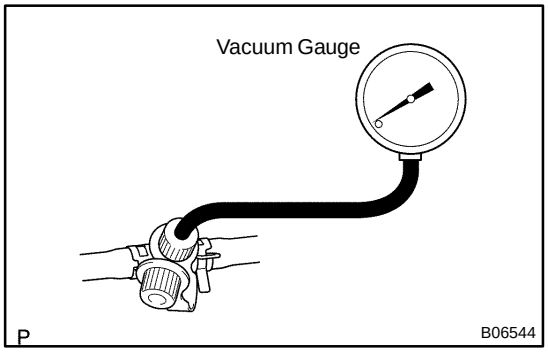

4. INSPECT EVAP SYSTEM LINE

(a) Warm up and stop the engine. Allow the engine to warm up to normal operating temperature.

(b) Install a vacuum gauge (EVAP control system test equipment vacuum gauge) to the EVAP service port on the purge line.

(c) Hand–Held Tester:
Forced driving of the VSV for the EVAP.
(1) Connect a hand–held tester to the DLC3
(2) Start the engine.
(3) Push the hand–held tester main switch ON.
(4) Use the ACTIVE TEST mode on the hand–held tester to operate the VSV for the EVAP.

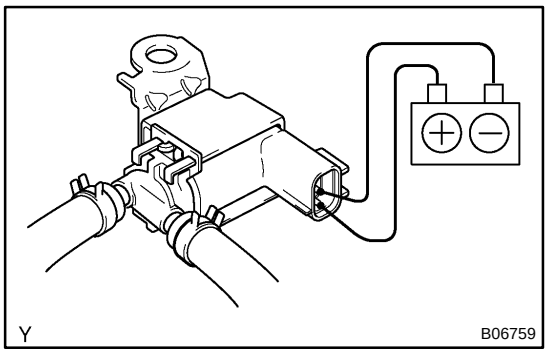

(d) If you have no Hand–Held Tester:
Forced driving of the VSV for the EVAP.
(1) Disconnect the VSV connector for the EVAP.
(2) Connect the positive (+) and negative (–) leads from the battery to the VSV terminals for the EVAP.
(3) Start the engine.

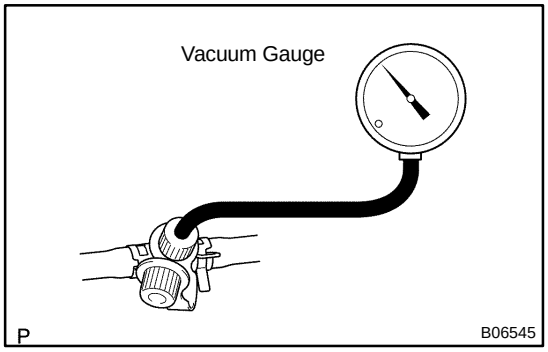

(e) Check the vacuum at idle
Vacuum:
Maintain at 0.368 – 19.713 in.Hg (5 – 268 in.Aq) for over 5 seconds.

HINT:
If the vacuum does not change, you can conclude that the hose connecting the VSV to the service port has come loose or is blocked, or the VSV is malfunctioning.

(f) Hand–Held Tester:
Conclude forced driving of the VSV for the EVAP.
(1) Stop the engine.
(2) Disconnect the hand–held tester from the DLC3.

(g) If you have no Hand–Held tester:
Conclude forced driving of the VSV for the EVAP.
(1) Stop the engine.
(2) Disconnect the positive (+) and negative (–) leads from the battery from the VSV terminals for the EVAP.
(3) Connect the VSV connector for the EVAP.

(h) Disconnect the vacuum gauge from the EVAP service port on the purge line.

(i) Connect a pressure gauge to the EVAP service port on the purge line.

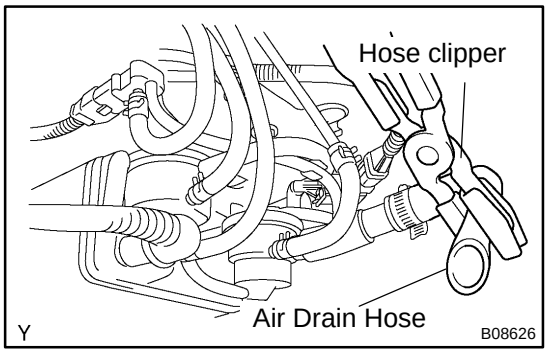

(j) Check the pressure.
(1) Close off the air drain hose at the marked position of the canister with a hose clipper or similar instrument.

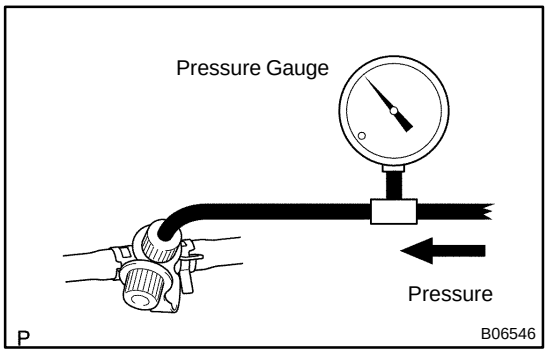

(2) Add the pressure (13.5 – 15.5 in. Aq) from the EVAP service port.

Pressure:

2 minutes after the pressure is added, the gauge should be over 7.7 – 8.8 in.Aq.

HINT:

If you can not add pressure, you can conclude that the hose connecting the VSV – canister – fuel tank has slipped off or the VSV is open.

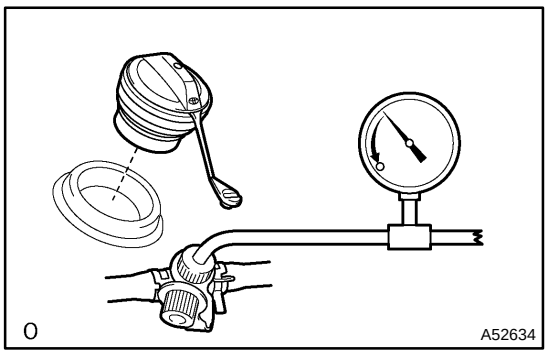

(3) Check if the pressure decreases when the fuel tank cap is removed while adding pressure.

HINT:

If the pressure dose not decrease when the filler cap is removed, then you can conclude that the hose connecting the service port to the fuel tank is blocked, etc.

(k) Disconnect the pressure gauge from the EVAP service port on the purge line.

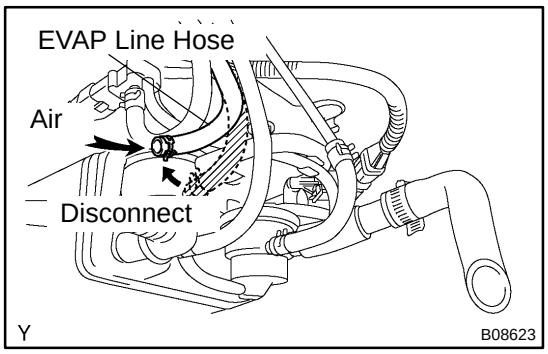

5. CHECK AIRTIGHTNESS IN FUEL TANK AND FILLER PIPE

(a) Disconnect the EVAP line hose from the charcoal canister side and then pressurize and make the internal pressure in the fuel tank 4 kPa (41 gf/cm^2, 0.58 psi).
(b) Check that the internal pressure of the fuel tank can be hold for 1 minute.
(c) Check the connected portions of each hose and pipe.
(d) Check the installed parts on the fuel tank.

If there is no abnormality, replace the fuel tank and filler pipe.

(e) Reconnect the EVAP line hose to the charcoal canister.

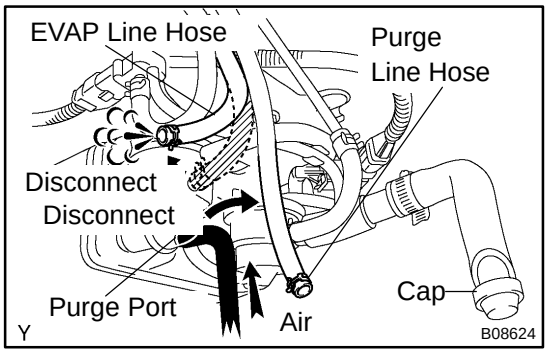

6. INSPECT FUEL CUT OFF VALVE AND FILL CHECK VALVE

(a) Disconnect the purge line hose and EVAP line hose from the charcoal canister.
(b) Plug the cap to the air drain hose.
(c) Pressurize 4 kPa (41 gf/cm^2, 0.58 psi) to the purge port and check that there is ventilation through the EVAP line hose.

HINT:

In the condition that the fuel is full, as the float value of the fill check valve is closed and has no ventilation, it is necessary to check the fuel amount (volume).

(d) Check if there is any struck in the vent line hose and EVAP line hose.

If there is no stuck in hoses, replace the fuel cut off valve and fill check valve.

(e) Reconnect the purge line hose and EVAP line hose to the charcoal canister.

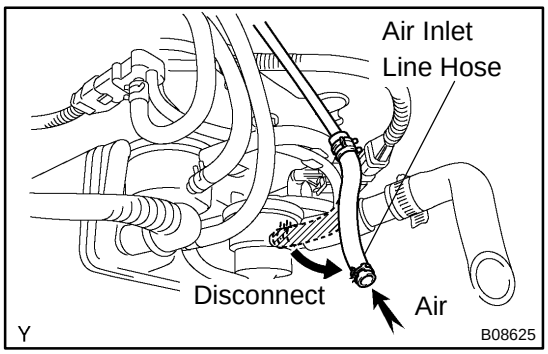

7. CHECK AIR INLET LINE

(a) Disconnect the air inlet line hose from the charcoal canister.
(b) Check that there is ventilation in the air inlet line.
(c) Reconnect the air inlet line hose to the charcoal canister.

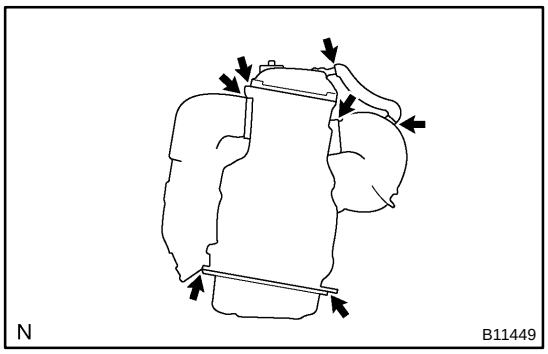

8. VISUALLY INSPECT HOSES, CONNECTIONS AND GASKETS

(a) Check for cracks, leaks or damage.

INSPECTION

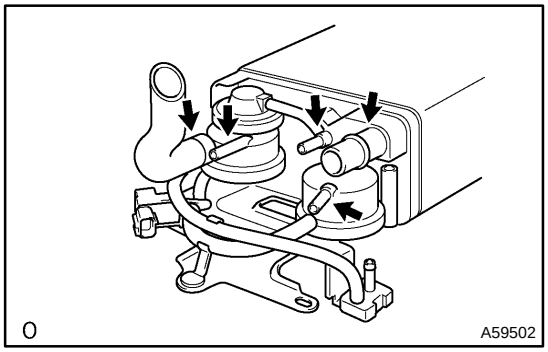

1. CHARCOAL CANISTER ASSY

(a) Visually check the charcoal canister for cracks or damage.

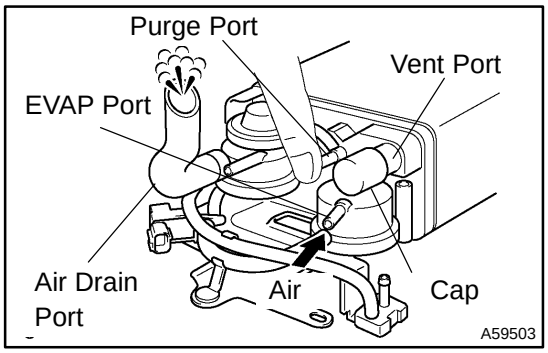

(b) Inspect the charcoal canister operation.
(1) Plug the vent port with the cap.
(2) While holding the purge port closed, blow air (1.76 kPa, 18 gf/cm^2, 0.26 psi) into the EVAP port and check that air flows from the air drain port.

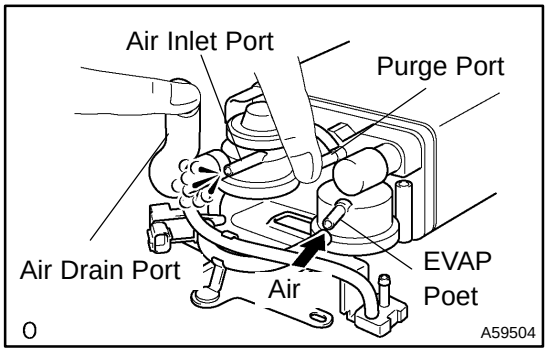

(3) While holding the purge port and the air drain port closed, blow air (1.76 kPa, 18 gf/cm^2, 0.26 psi) into the EVAP port and check that air does not flow from the air inlet port.

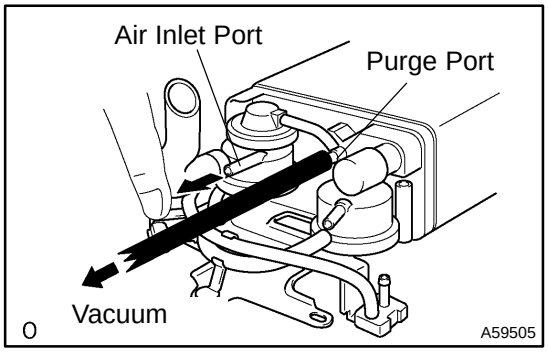

(4) Apply vaccum (3.43 kPa, 25.7 mmHg, 1.01 in.Hg) to the purge port, check that the vacuum dose not decrease when the air inlet port is closed, and check that the vacuum decreases when the air inlet port is released.

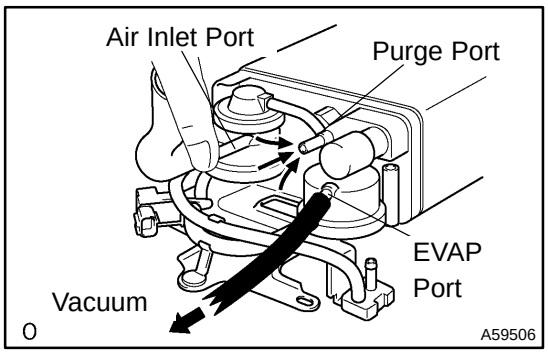

(5) While holding the air inlet port closed, apply vacuum (3.43 kPa, 25.7 mmHg, 1.01 in.Hg) to the EVAP port and check that air flows into the purge port.

If operation is not as spacified, replace the charcoal canister.

(6) Remove the hose and cap from vent port.

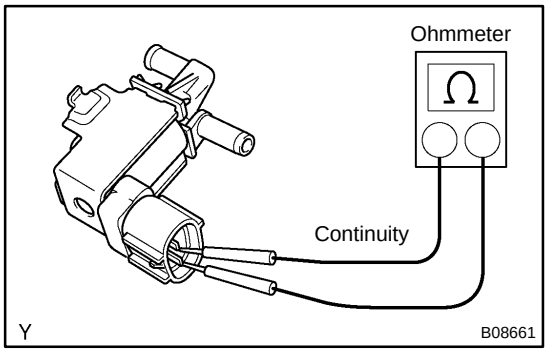

(c) Inspect VSV for Pressure Swiching Valve

(1) Using an ohmmeter, check that there is continuity between the terminals.

Resistance: 30 – 36 Ω at 20°C (68°F)

If there is no continuity, replace the VSV.

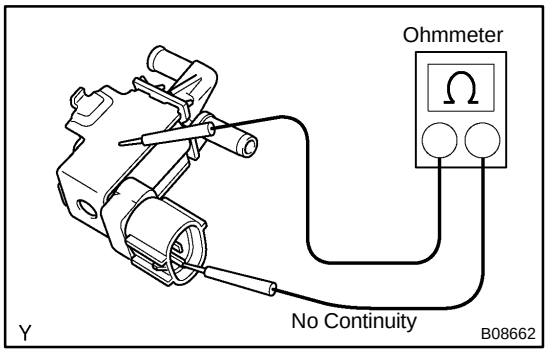

(2) Using an ohmmeter, check that there is no continuity between each terminal and the body.

If there is continuity, replace the VSV.

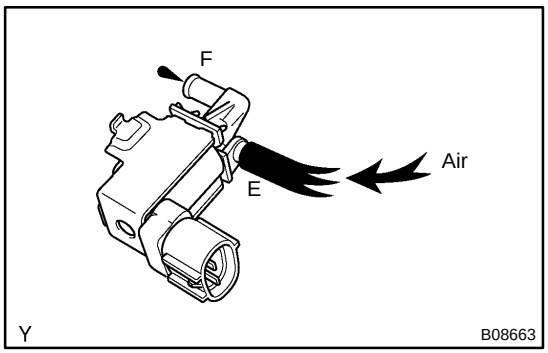

(3) Check that air does not flow from ports E to F.

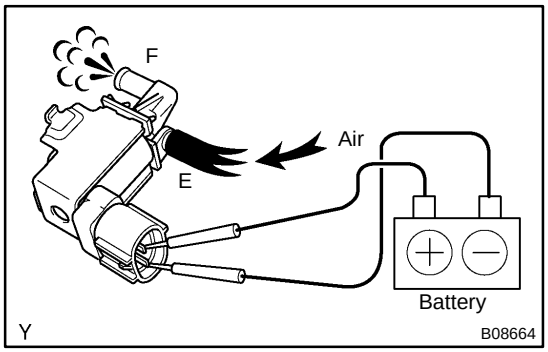

(4) Apply battery positive voltage across the terminals.

(5) Check that air flows from ports E to F.

If operation is not as specified, replace the VSV.

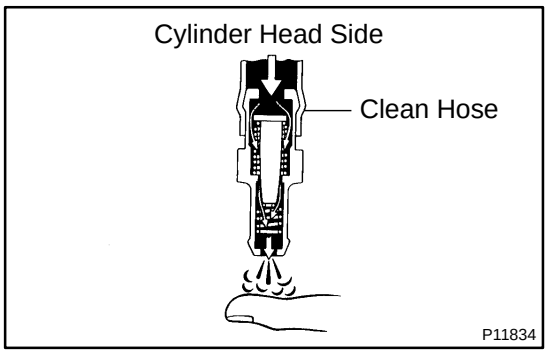

2. VENTILATION VALVE SUB–ASSY

(a) Install clean hose to the PCV valve.
(b) Inspect the PCV valve operation.
  (1) Blow air into the cylinder head side, and check that air passes through easily.

CAUTION:
Do not suck air through the valve. Petroleum substances inside the valve air harmful.

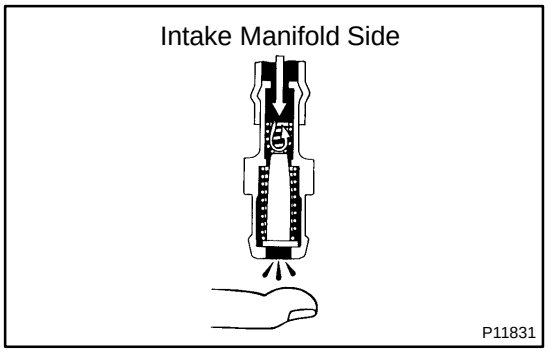

  (2) Blow air into the intake manifold side, and check that air passes through with difficulty.

If operation is not as specified, replace the PCV valve.
(c) Remove clean hose from the PCV valve.

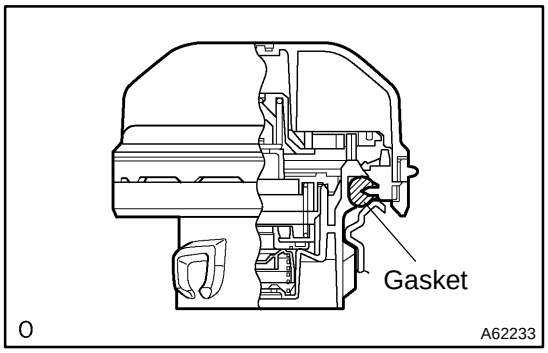

3. FUEL TANK CAP ASSY

(a) Visually check if cap and/or gasket are deformed or damaged.

If necessary, repair or replace the cap.

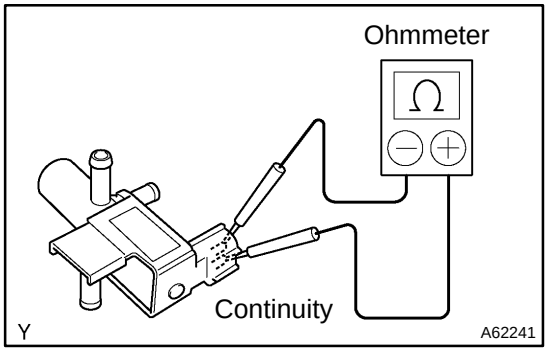

4. VACUUM SWITCHING VALVE ASSY NO.1

(a) Inspect VSV for open circuit.
  (1) Using an ohmmeter, check that there is continuity between the terminals.
  Resistance: 30 – 34 Ω at 20°C (68°F)

If there is no continuity, replace the VSV.

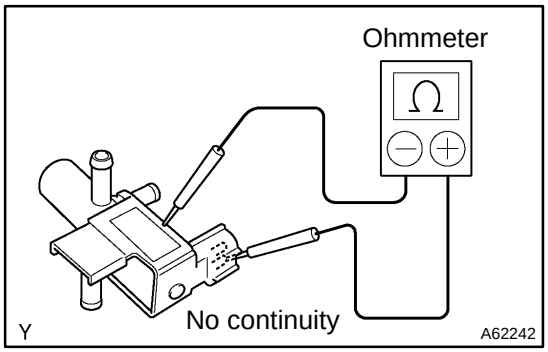

(b) Inspect the VSV for ground.
  (1) Using an ohmmeter, check that there is no continuity between each terminal and the body.

If there is continuity, replace the VSV.

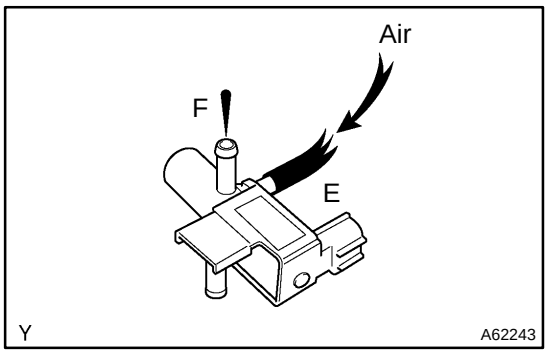

(c) Inspect the VSV operation.
(1) Check that air flows with a little difficulty from ports E to F.

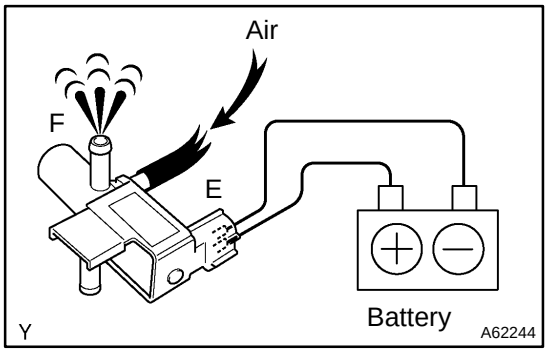

(2) Apply battery voltage across the terminals.
(3) Check that air flows from port E to port F.

If operation is not as specified, replace the VSV.

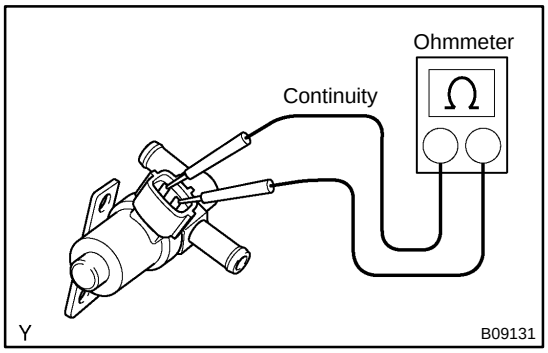

5. AIR CLEANER CAP SUB–ASSY

(a) Inspect VSV for Canister Closed valve (CCV).
(1) Using an ohmmeter, check that there is continuity between the terminals.

Resistance: 24 – 30 Ω at 20°C (68°F)

If there is no continuity, replace the VSV.

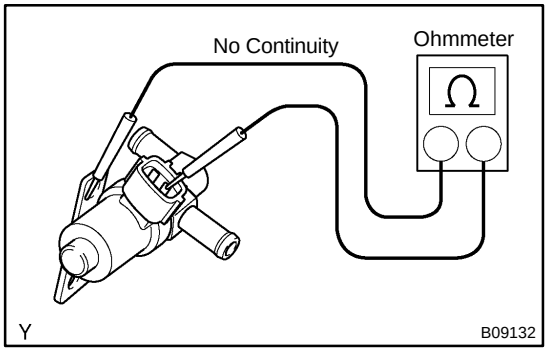

(2) Using an ohmmeter, check that there is no continuity between each terminal and the body.

If there is continuity, replace the VSV.

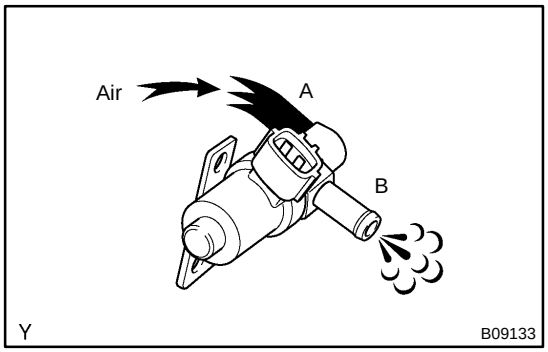

(3) Check that air flows from ports A to B.

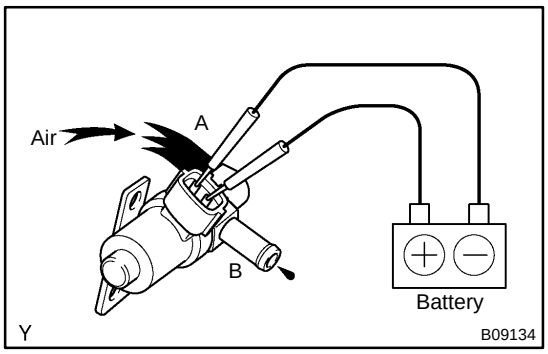

(4) Apply battery positive voltage across the terminals.
(5) Check that air does not flow from ports A to B.

If operation is not as specified, replace the VSV.

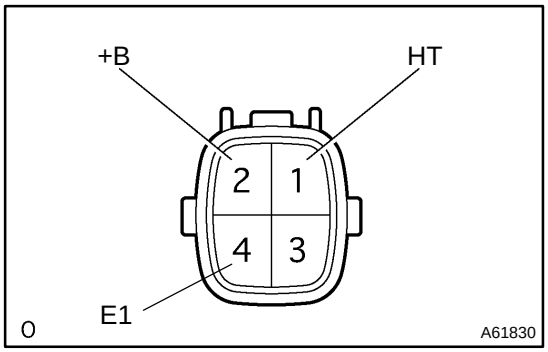

6. OXYGEN SENSOR

(a) Using an ohmmeter, measure the resistance between the terminals.

Resistance:

Terminal No.	Resistance
1 (HT) ⇔ 2 (+B)	11 – 16 Ω at 20°C (68°F)
1 (HT) ⇔ 4 (E1)	No Continuity

If the resistance is not as specified, replace the sensor.

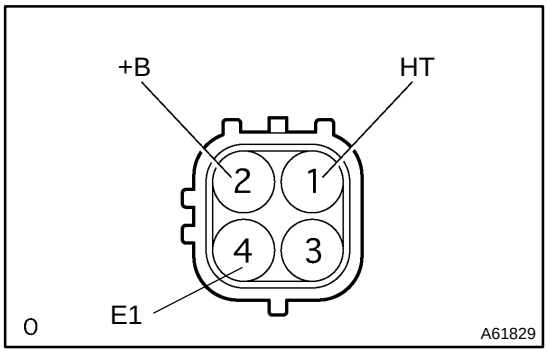

7. AIR FUEL RATIO SENSOR

(a) Using an ohmmeter, measure the resistance between the terminals.

Resistance:

Terminal No.	Resistance
1 (HT) ⇔ 2 (+B)	1.8 – 3.4 Ω at 20°C (68°F)
1 (HT) ⇔ 4 (E1)	No Continuity

If the resistance is not as specified, replace the sensor.

EMISSION CONTROL SYSTEM (1MZ–FE)

ON–VEHICLE INSPECTION

1202X–01

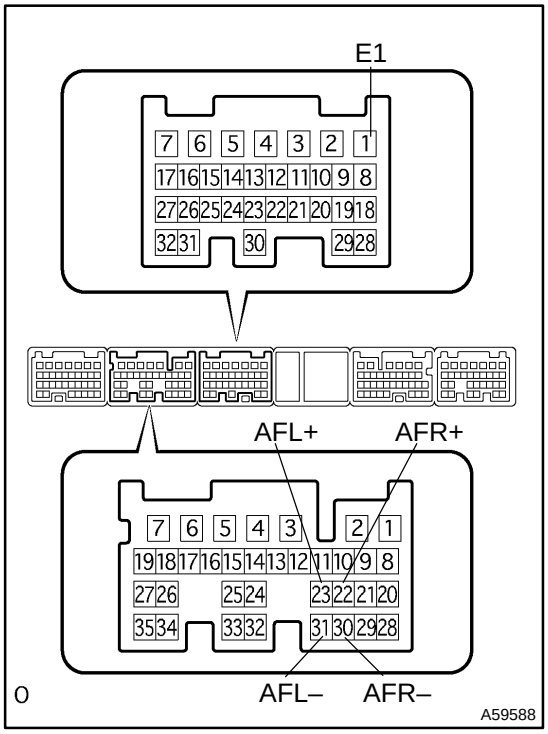

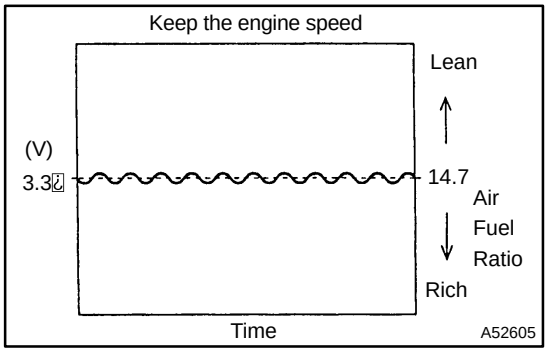

1. INSPECT AIR–FUEL RATIO COMPENSATION SYSTEM

(a) Measure voltage between terminals of the engine ECM.
Standard voltage:

Terminal	Condition	Voltage
AFR+ ⇔ E1	IG switch ON	3.3V
AFR– ⇔ E1	IG switch ON	3.0V
AFL+ ⇔ E1	IG switch ON	3.3V
AFL– ⇔ EI	IG switch ON	3.0V

CAUTION:
Connect test leads from the back side of the connector with the ECM connected.
HINT:
Voltage between terminals of the engine ECM is kept constant regardless of the voltage of A/F sensor.

(b) Connect the hand–held tester to the DLC3.
(c) Select ”DATA MONITOR” – ”A/FS B1 S1”, ”A/FS B2 S1” and ”O2S B1 S2” to display the monitor.
(d) Warm up the A/F sensor with the engine speed at 2,500 r.p.m for approx. 2 minutes.
(e) Keep the engine speed at 2,500 r.p.m and confirm that the displays of ”A/FS B1 S1” and ”A/FS B2 S1” are as shown in the illustration.

CAUTION:
- **The illustration differs from the real display.**
- **Only hand–held tester displays the waveform of A/F sensor.**

(f) Confirm that the display of ”O2S B1 S2” changes between 0V to 1V with the engine speed at 2,500 r.p.m.

2. INSPECT FUEL CUT OFF RPM

(a) Increase the engine speed to at least 3,500 r.p.m.
(b) Use a sound scope to check for injector operating noise.
(c) Check that when the throttle lever is released, injector operation noise stops momentarily and then resumes.

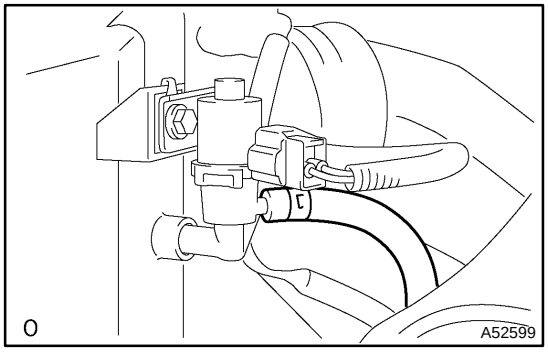

3. INSPECT EVAPORATIVE EMISSION CONTROL SYSTEM

(a) After starting the engine, disconnect the vacuum hose shown in the illustration.
(b) Confirm vacuum occurs at the vsv port, when choosing ”ACTIVE TEST” and ”PURGE VSV” according to the display on hand–held tester.
(c) Finish ”ACTIVE TEST”, then connect the vacuum hose again.

(d) After going to ”ECM DATA MONITOR” on the hand–held tester, choose ”PURGE VSV” to check the operation of the purge VSV.

(e) After warm up the engine and drive the vehicle, confirm the VSV turns on from off.

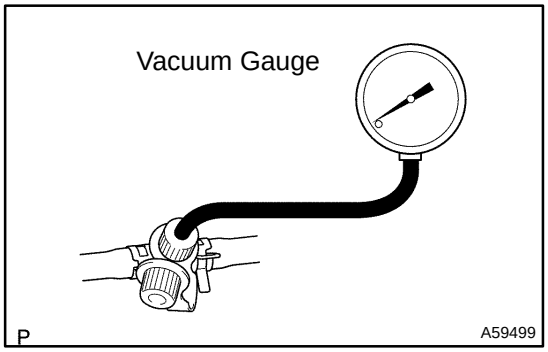

4. INSPECT EVAP SYSTEM LINE

(a) Warm up the engine and stop the engine. Allow the engine to warm up to normal operating temperature.

(b) Install a vacuum gauge (EVAP control system test equipment vacuum gauge) to the EVAP service port on the purge line.

(c) Hand–Held Tester:
Forced driving of the VSV for the EVAP.
(1) Connect a hand–held tester to the DLC3
(2) Start the engine.
(3) Push the hand–held tester main switch ON.
(4) Use the ACTIVE TEST mode on the hand–held tester to operate the VSV for the EVAP.

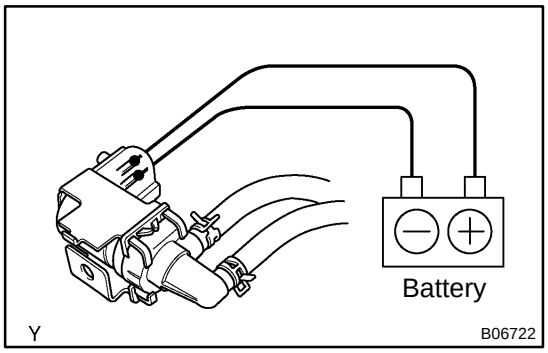

(d) If you have no Hand–Held Tester:
Forced driving of the VSV for the EVAP.
(1) Disconnect the VSV connector for the EVAP.
(2) Connect the positive (+) and negative (–) leads from the battery to the VSV terminals for the EVAP.
(3) Start the engine.

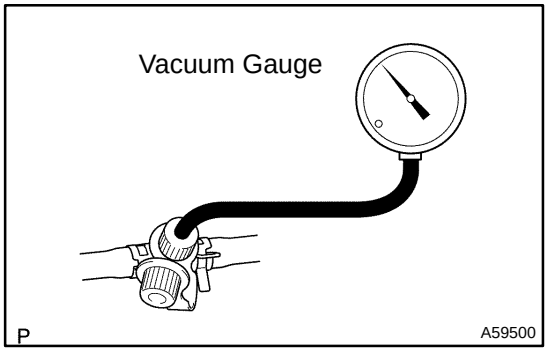

(e) Check the vacuum at idle
Vacuum:
Maintain at 0.368 – 19.713 in.Hg (5 –268 in.Aq) for over 5 seconds.

HINT:
If the vacuum does not change, you can conclude that the hose connecting the VSV to the service port has come loose or is blocked, or the VSV is malfunctioning.

(f) Hand–Held Tester:
Conclude forced driving of the VSV for the EVAP.
(1) Stop the engine.
(2) Disconnect the hand–held tester from the DLC3.

(g) If you have no Hand–Held tester:
Conclude forced driving of the VSV for the EVAP.
(1) Stop the engine.
(2) Disconnect the positive (+) and negative (–) leads from the battery from the VSV terminals for the EVAP.
(3) Connect the VSV connector for the EVAP.

(h) Disconnect the vacuum gauge from the EVAP service port on the purge line.

(i) Connect a pressure gauge to the EVAP service port on the purge line.

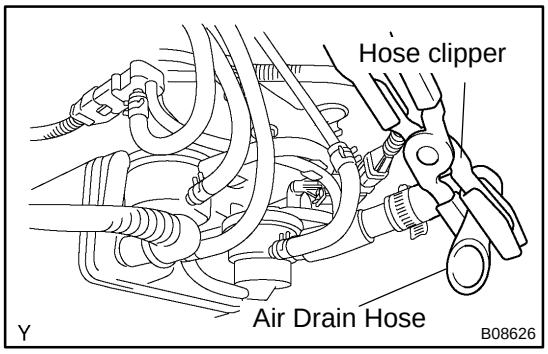

(j) Check the pressure.
(1) Close off the air drain hose at the marked position of the canister with a hose clipper or similar instrument.

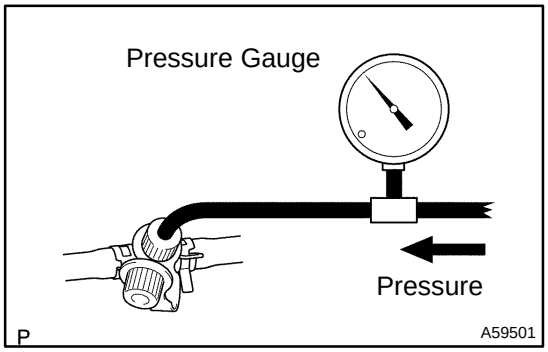

(2) Add the pressure (13.5 – 15.5 in. Aq) from the EVAP service port.

Pressure:

2 minutes after the pressure is added, the gauge should be over 7.7 – 8.8 in.Aq.

HINT:

If you can not add pressure, you can conclude that the hose connecting the VSV – canister – fuel tank has slipped off or the VSV is open.

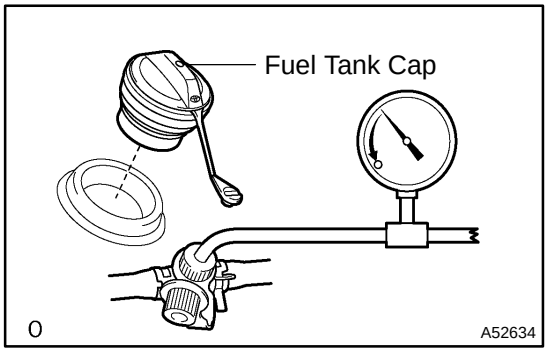

(3) Check if the pressure decreases when the fuel tank cap is removed while adding pressure.

HINT:

If the pressure dose not decrease when the filler cap is removed, then you can conclude that the hose connecting the service port to the fuel tank is blocked, etc.

(k) Disconnect the pressure gauge from the EVAP service port on the purge line.

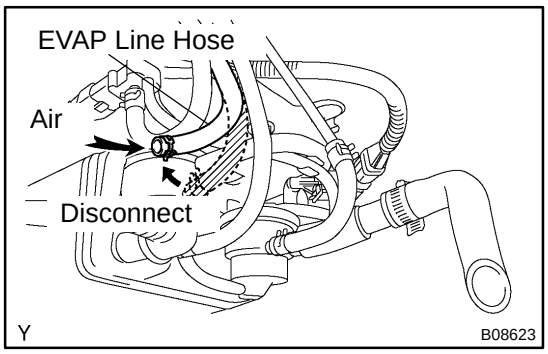

5. CHECK AIRTIGHTNESS IN FUEL TANK AND FILLER PIPE

(a) Disconnect the EVAP line hose from the charcoal canister side and then pressurize and make the internal pressure in the fuel tank 4 kPa (41 gf/cm^2, 0.58 psi).
(b) Check that the internal pressure of the fuel tank can be hold for 1 minute.
(c) Check the connected portions of each hose and pipe.
(d) Check the installed parts on the fuel tank.

If there is no abnormality, replace the fuel tank and filler pipe.

(e) Reconnect the EVAP line hose to the charcoal canister.

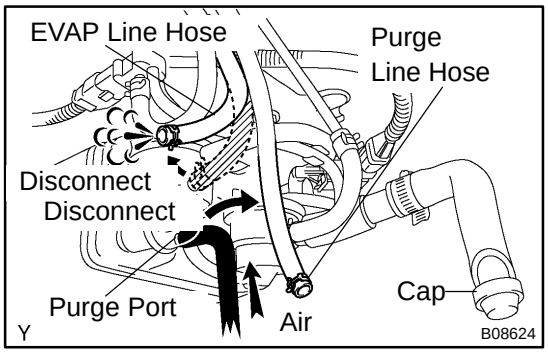

6. INSPECT FUEL CUT OFF VALVE AND FILL CHECK VALVE

(a) Disconnect the purge line hose and EVAP line hose from the charcoal canister.
(b) Plug the cap to the air drain hose.
(c) Pressurize 4 kPa (41 gf/cm^2, 0.58 psi) to the purge port and check that there is ventilation through the EVAP line hose.

HINT:

In the condition that the fuel is full, as the float value of the fill check valve is closed and has no ventilation, it is necessary to check the fuel amount (volume).

(d) Check if there is any struck in the vent line hose and EVAP line hose.

If there is no stuck in hoses, replace the fuel cut off valve and fill check valve.

(e) Reconnect the purge line hose and EVAP line hose to the charcoal canister.

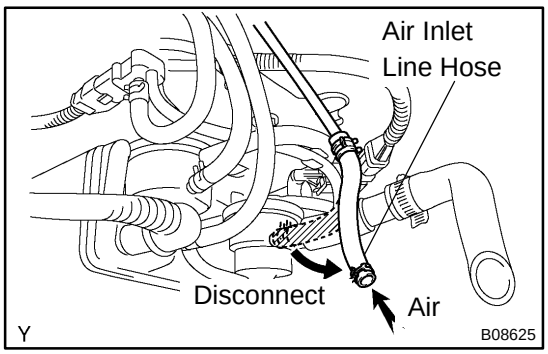

7. CHECK AIR INLET LINE

(a) Disconnect the air inlet line hose from the charcoal canister.
(b) Check that there is ventilation in the air inlet line.
(c) Reconnect the air inlet line hose to the charcoal canister.

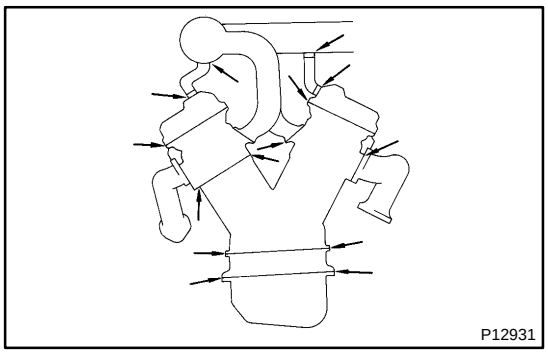

8. VISUALLY INSPECT HOSES, CONNECTIONS AND GASKETS

(a) Check for cracks, leaks or damage.

INSPECTION

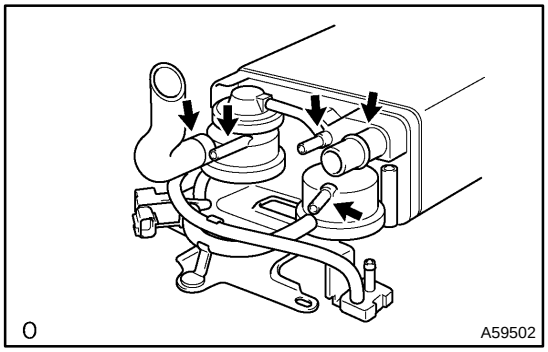

1. CHARCOAL CANISTER ASSY

(a) Visually check the charcoal canister for cracks or damage.

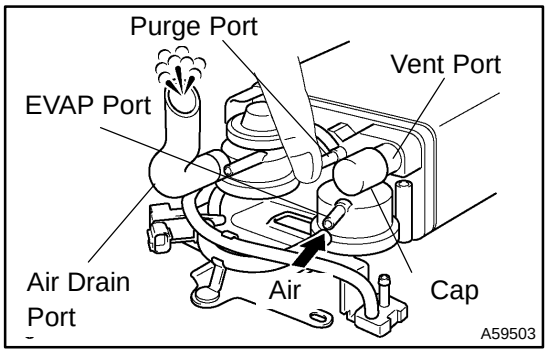

(b) Inspect the charcoal canister operation.
(1) Plug the vent port with the cap.
(2) While holding the purge port closed, blow air (1.76 kPa, 18 gf/cm^2, 0.26 psi) into the EVAP port and check that air flows from the air drain port.

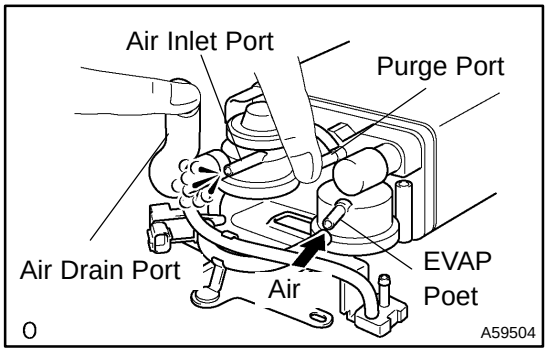

(3) While holding the purge port and the air drain port closed, blow air (1.76 kPa, 18 gf/cm^2, 0.26 psi) into the EVAP port and check that air does not flow from the air inlet port.

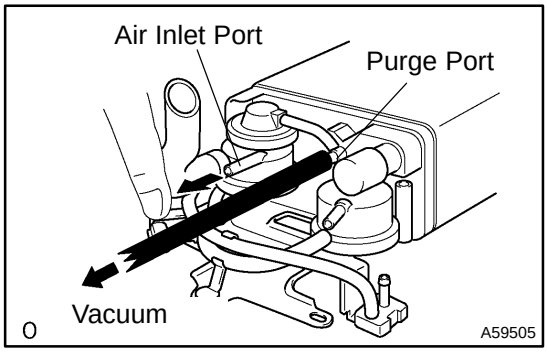

(4) Apply vacuum (3.43 kPa, 25.7 mmHg, 1.01 in.Hg) to the purge port, check that the vacuum dose not decrease when the air inlet port is closed, and check that the vacuum decreases when the air inlet port is released.

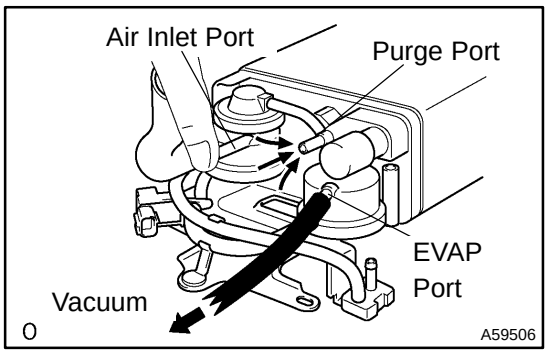

(5) While holding the air inlet port closed, apply vacuum (3.43 kPa, 25.7 mmHg, 1.01 in.Hg) to the EVAP port and check that air flows into the purge port.

If operation is not as specified, replace the charcoal canister.

(6) Remove the hose and cap from vent port.

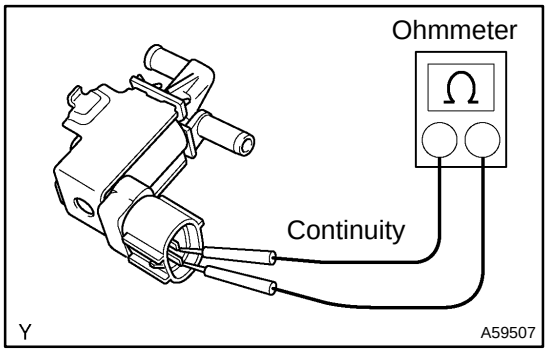

(c) Inspect VSV for pressure switching valve

(1) Using an ohmmeter, check that there is continuity between the terminals.

Resistance:

37 – 44 Ω at 20°C (68°F)

51 – 62 Ω at 120°C (248°F)

If there is no continuity, replace the VSV.

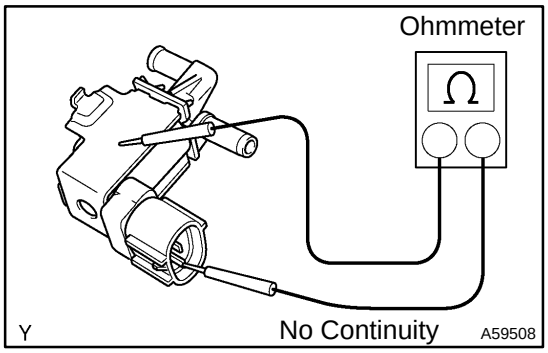

(2) Using an ohmmeter, check that there is no continuity between each terminal and the body.

If there is continuity, replace the VSV.

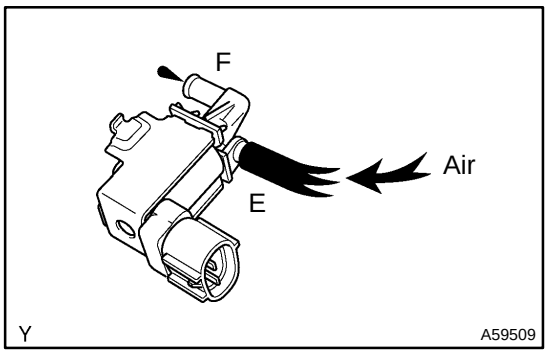

(3) Check that air does not flow from ports E to F.

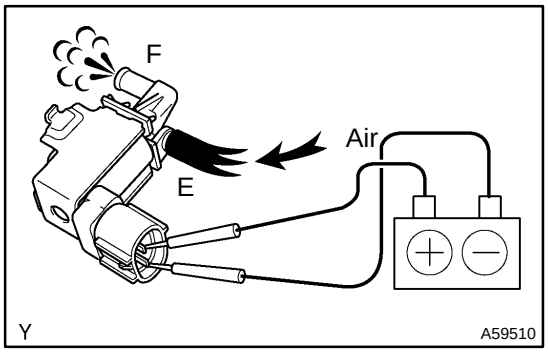

(4) Apply battery positive voltage across the terminals.

(5) Check that air flows from ports E to F.

If operation is not as specified, replace the VSV.

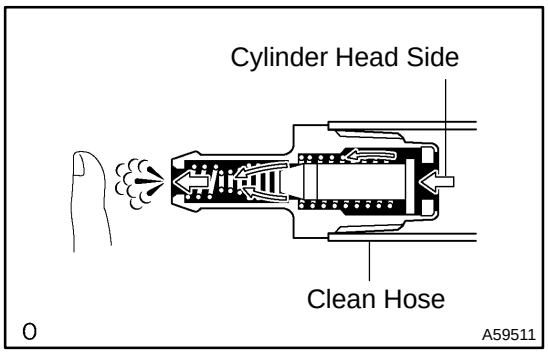

2. VENTILATION VALVE SUB–ASSY

(a) Install clean hose to the PCV valve.
(b) Inspect the PCV valve operation.
(1) Blow air into the cylinder head side, and check that air passes through easily.

CAUTION:
Do not suck air through the valve. Petroleum substances inside the valve air harmful.

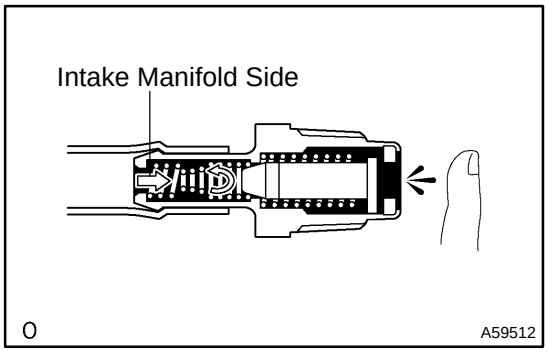

(2) Blow air into the intake manifold side, and check that air passes through with difficulty.

If operation is not as specified, replace the PCV valve.
(c) Remove clean hose from the PCV valve.

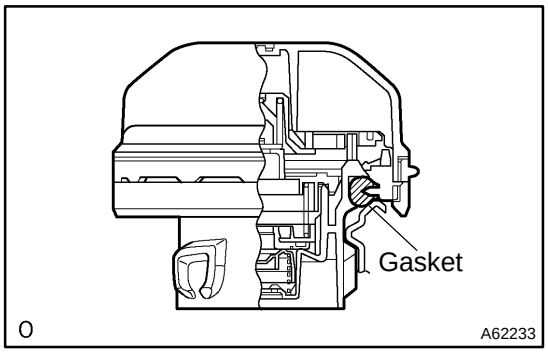

3. FUEL TANK CAP ASSY

(a) Visually check if cap and/or gasket are deformed or damaged.

If necessary, repair or replace the cap.

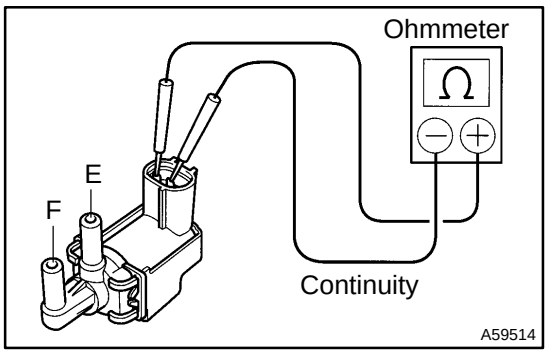

4. EMISSION CONTROL VALVE SET

(a) Inspect VSV for EVAP.
(1) Using an ohmmeter, check that there is continuity between the terminals.
Resistance: 27 – 33 Ω at 20°C (68°F)

If there is no continuity, replace the VSV set.

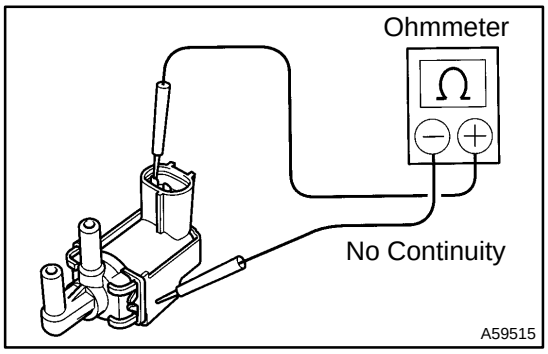

(2) Using an ohmmeter, check that there is no continuity between each terminal and the body.

If there is continuity, replace the VSV set.

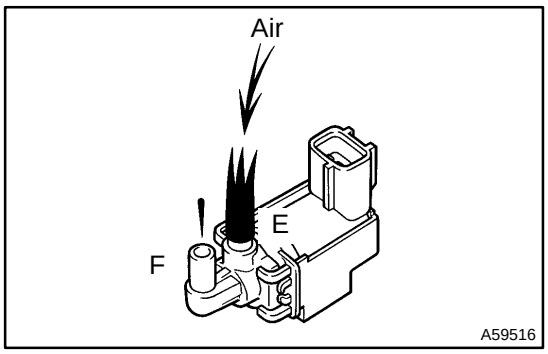

(3) Check that air flows with difficulty from ports E to F.

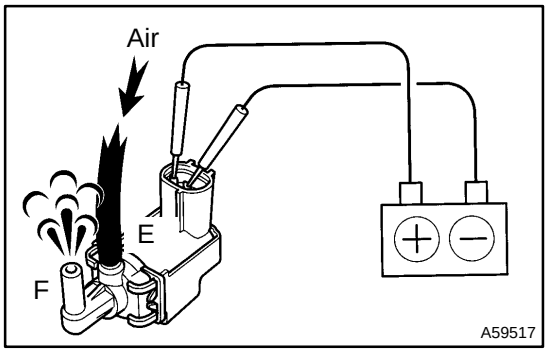

(4) Apply battery voltage across the terminals.
(5) Check that air flows from ports E to F.

If operation is not as specified, replace the VSV set.

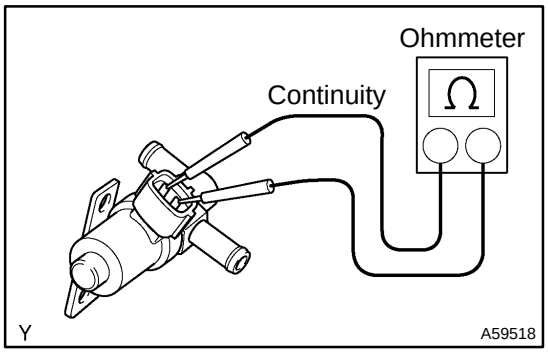

5. AIR CLEANER CAP SUB–ASSY

(a) Inspect VSV for Canister Closed valve (CCV).
(1) Using an ohmmeter, check that there is continuity between the terminals.

Resistance: 25 – 30 Ω at 20°C (68°F)

If there is no continuity, replace the VSV.

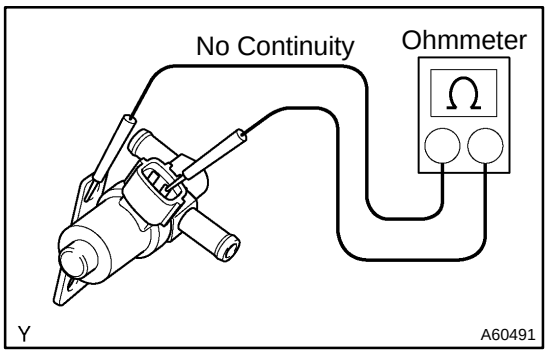

(2) Using an ohmmeter, check that there is no continuity between each terminal and the body.

If there is continuity, replace the VSV.

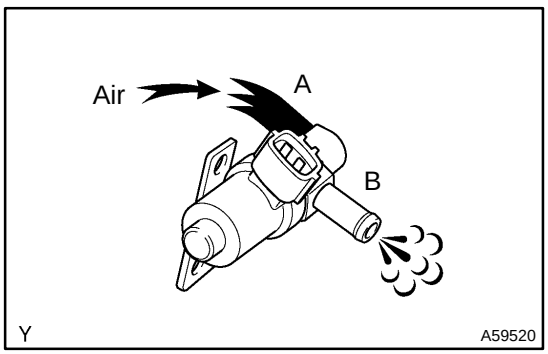

(3) Check that air flows from ports A to B.

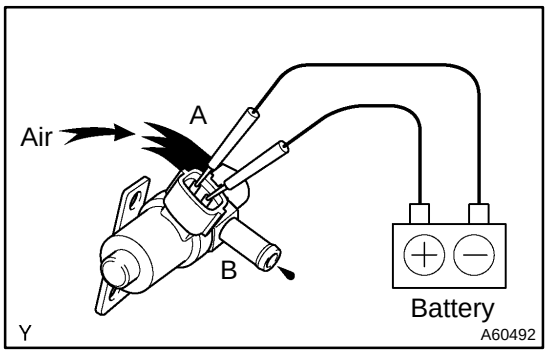

(4) Apply battery positive voltage across the terminals.
(5) Check that air does not flow from ports A to B.

If operation is not as specified, replace the VSV.

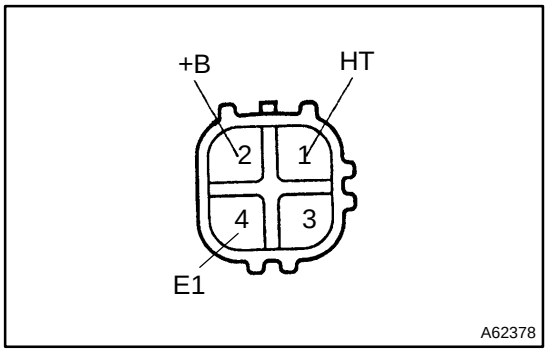

6. OXYGEN SENSOR
OXYGEN NO.2 SENSOR

(a) Using an ohmmeter, measure the resistance between the terminals.
Resistance:

Terminal No.	Resistance
1 (HT) ⇔ 2 (+B)	11 – 16 Ω at 20°C (68°F)
1 (HT) ⇔ 4 (E1)	No Continuity

If the resistance is not as specified, replace the sensor.

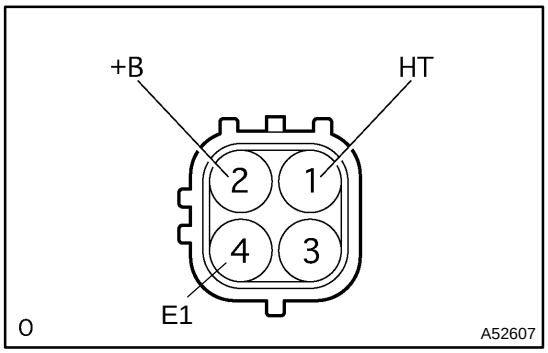

7. AIR FUEL RATIO SENSOR

(a) Using an ohmmeter, measure the resistance between the terminals.
Resistance:

Terminal No.	Resistance
1 (HT) ⇔ 2 (+B)	1.8 – 3.4 Ω at 20°C (68°F)
1 (HT) ⇔ 4 (E1)	No Continuity

If the resistance is not as specified, replace the sensor.

EGR SYSTEM (1MZ–FE)

ON–VEHICLE INSPECTION

1202Z–01

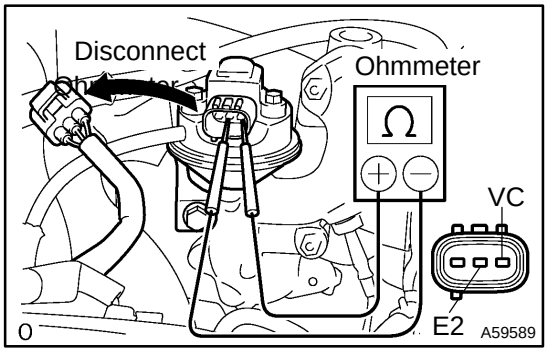

1. INSPECT EGR VALVE POSITION SENSOR

(a) Inspect the resistance of the EGR valve position sensor.

(1) Disconnect the EGR valve position sensor connector.

(2) Using an ohmmeter, measure the resistance between the terminals VC and E2.

Resistance: 1.5 – 4.3 kΩ

If the resistance is not as specified, replace the EGR valve position sensor.

(3) Reconnect the EGR valve position sensor connector.

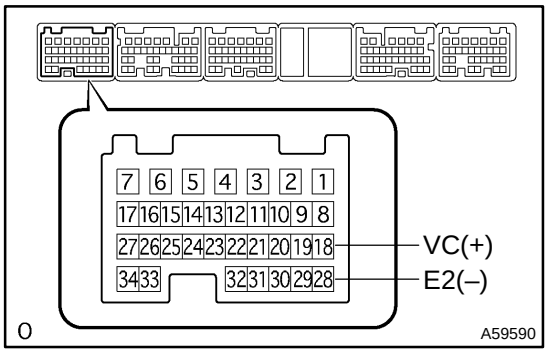

(b) Inspect the power output voltage of the EGR valve position sensor.

(1) Disconnect the vacuum hose from the EGR valve.

(2) Turn the ignition switch ON.

(3) Connect a voltmeter to terminals VC and E2 of the ECM, and measure the power source voltage.

Voltage: 4.5 – 5.5V

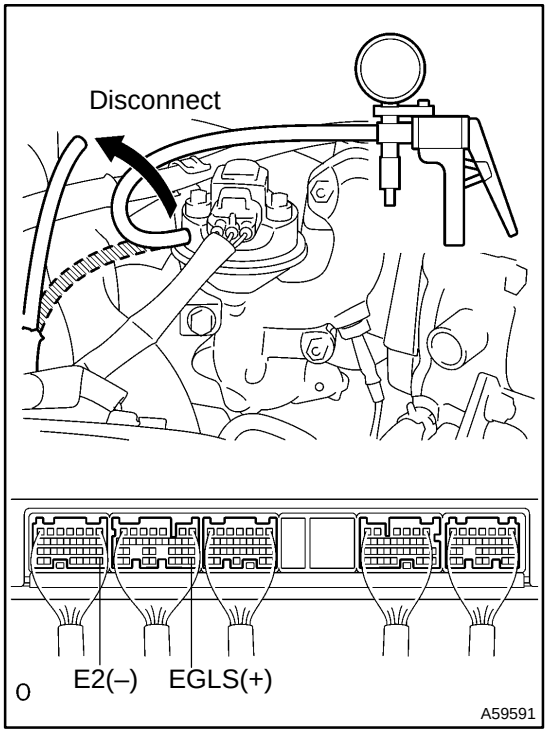

(4) Connect a voltmeter to terminals EGLS and E2 of the ECM, and measure the power outlet voltage under the following conditions.

- Using the MITYVAC (Hand–Held Vacuum Pump), apply a vacuum (17.3 kPa, 130mmHg, 5.1 in.Hg) to the EGR valve.

Voltage: 3.2 – 5.1 V

- Release the vacuum from the EGR valve.

Voltage: 0.4 – 1.6 V

If the voltage is not as specified, replace the EGR valve position sensor.

(5) Reconnect the vacuum hose to the EGR valve.

12030–01

INSPECTION

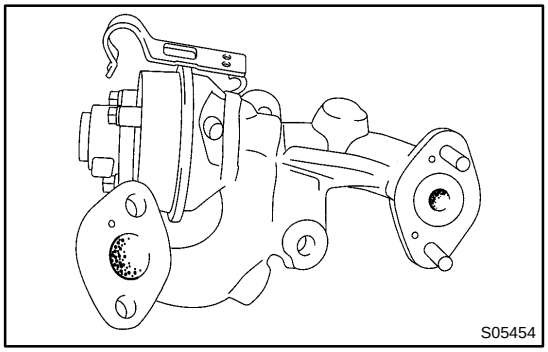

1. EGR VALVE ASSY

(a) Check for sticking and heavy carbon deposits.

If a problem is found, replace the EGR valve.

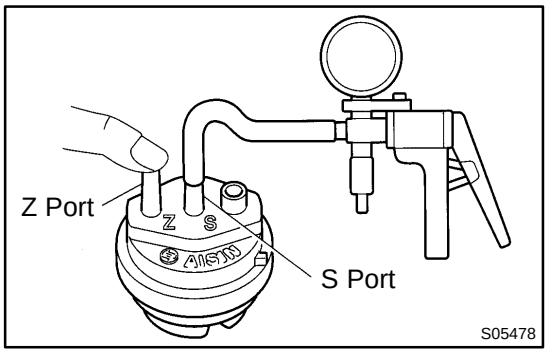

2. VACUUM CONTROL VALVE

(a) Connect the MITYVAC (Hand–Held Vacuum Pump) to port S of the VCV.

(b) Plug port Z completely with fingers.

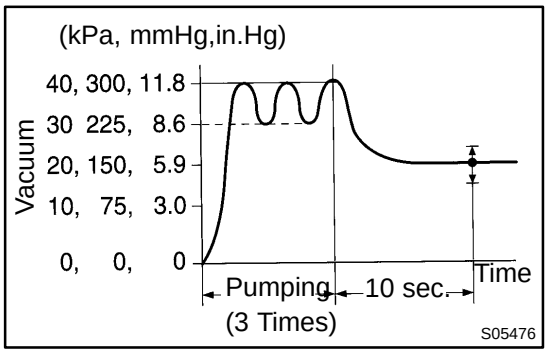

(c) Perform pumping 3 times and apply vacuum as shown in the illustration.

(d) Stop the performing pumping and check the indicated value of the MITYVAC after about 10 seconds.

Standard value:

15 – 24 kPa (112 – 180 mmHg, 4.4 – 7.1 in.Hg)

If the indicated value is not as specified, replace the VCV.

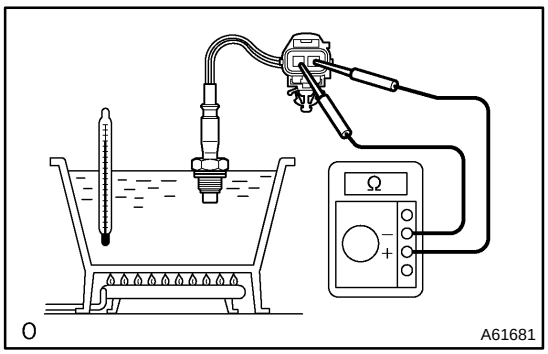

3. E.G.R GAS TEMPERATURE SENSOR

(a) Resistance inspection

(1) using an ohmmeter, measure the resistance between the terminals.

Resistance:

At 50°C (122°F)	69.4 – 88.5 Ω
At 100°C (212°F)	11.89 – 14.37 Ω
At 150°C (302°F)	2.79 – 3.59 Ω

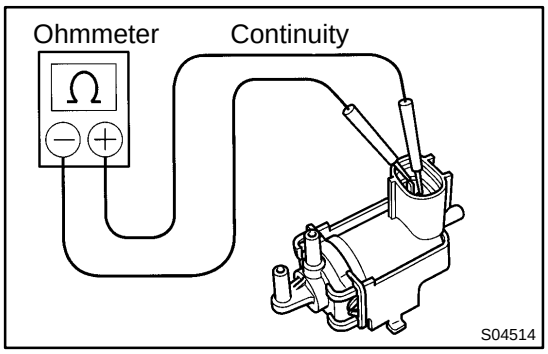

4. VACUUM SWITCHING VALVE NO.1

(a) Inspect VSV for open circuit.
(1) Using an ohmmeter, check that there is continuity between the terminals.
Resistance: 27 – 33 Ω at 20°C (68°F)

If there is no continuity, replace the VSV.

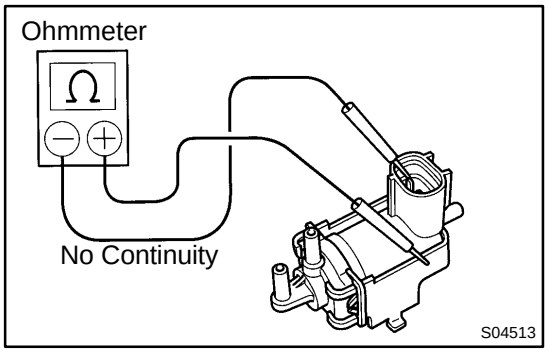

(b) Inspect VSV for ground.
(1) Using an ohmmeter, check that there is no continuity between each terminal and the body.

If there is continuity, replace the VSV.

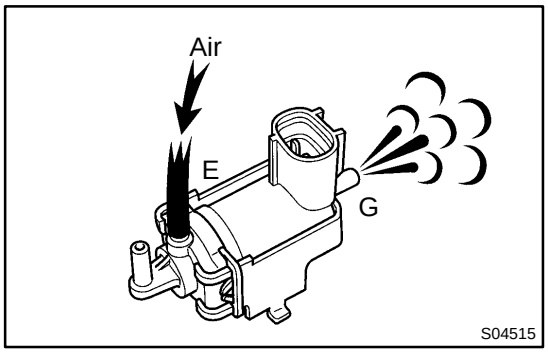

(c) Inspect VSV operation.
(1) Check that air flows from port E to port G.

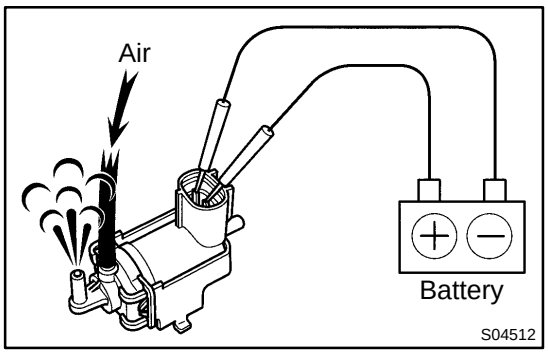

(2) Apply battery positive voltage across the terminals.
(3) Check that air flows from port E to port F.

If operation is not as specified, replace the VSV.

EGR VALVE ASSY (1MZ–FE)

12031–01

REPLACEMENT

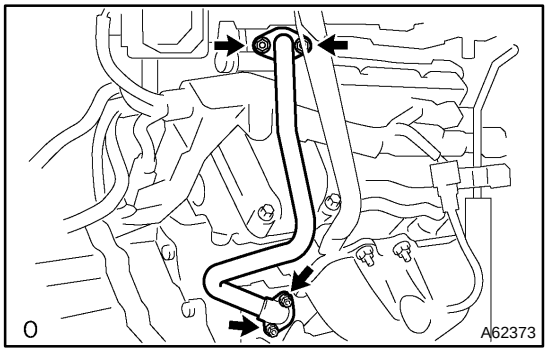

1. REMOVE EGR PIPE SUB–ASSY NO.2

(a) Remove the 4 nuts, EGR pipe and 2 gaskets.

2. REMOVE EGR VALVE ASSY

(a) Disconnect the EGR gas temperature sensor connector and clamp.

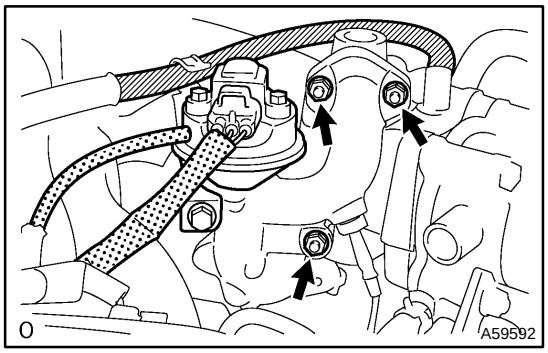

(b) Disconnect the EVAP hose from the EGR valve hook.
(c) Disconnect the vacuum hose from the EGR valve.
(d) Disconnect the EGR valve position sensor connector.
(e) Remove the 3 nuts, EGR valve and gasket.

3. REMOVE E.G.R GAS TEMPERATURE SENSOR

4. REPLACE EGR VALVE ASSY

5. INSTALL E.G.R GAS TEMPERATURE SENSOR

Torque: 20 N·m (200 kgf·cm, 14 ft·lbf)

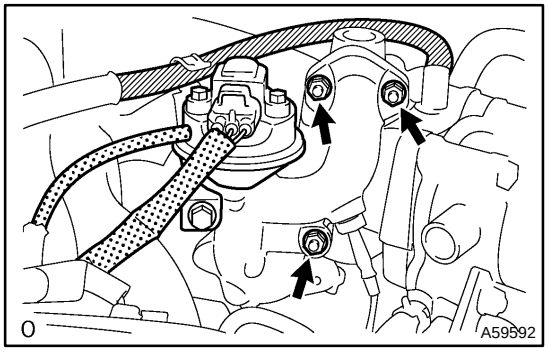

6. INSTALL EGR VALVE ASSY

(a) Install a new gasket and the EGR valve with the 3 nuts.
Torque: 12 N·m (120 kgf·cm, 9 ft·lbf)
(b) Connect the EGR valve position sensor connector.
(c) Connect the vacuum hose to the EGR valve.
(d) Connect the EVAP hose to the EGR valve hook.
(e) Connect the EGR gas temperature sensor connector and clamp.

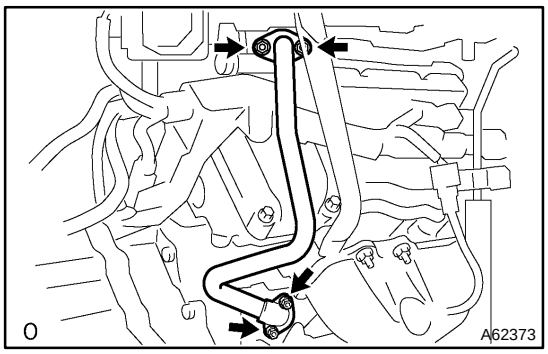

7. INSTALL EGR PIPE SUB–ASSY NO.2

(a) Install 2 new gaskets and the EGR pipe with the 4 nuts.
Torque: 12 N·m (120 kgf·cm, 9 ft·lbf)

INTAKE AIR CONTROL SYSTEM (1MZ–FE)

1300P–02

ON–VEHICLE INSPECTION

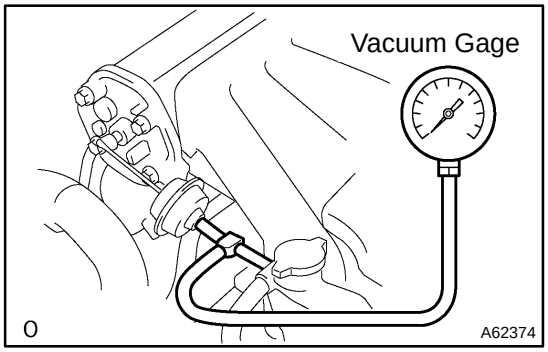

1. INSPECT INTAKE AIR CONTROL SYSTEM

(a) Using a 3–way connector, connect vacuum gauge to the actuator hose.

(b) Connect the hand–held tester to the DLC 3.

(c) Start the engine.

(d) Select the active test mode according to the message on the hand–held tester.

Vacuum:

VSV ON	Approx. 27 kPa (200 mm Hg, 7.9 in. Hg)
VSV OFF	0 kPa (0 mm Hg, 0 in. Hg.)

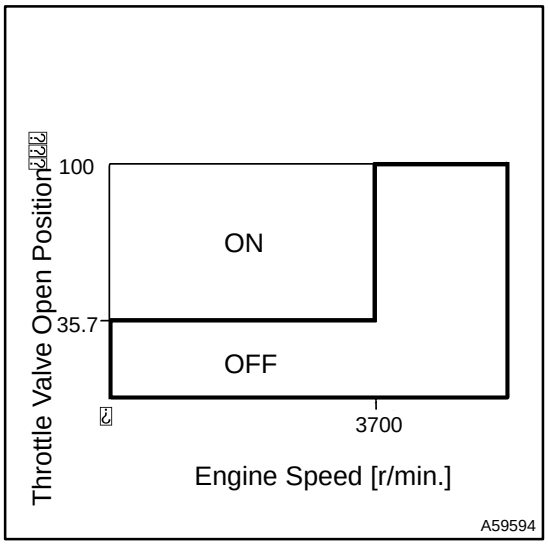

(e) Shift transmission into P range and control the accelerator pedal.

(f) Check the data monitor operation according to the illustration.

HINT:

The value in the illustration is only for reference; the throttle valve may operate diversely depend on the running condition.

INSPECTION

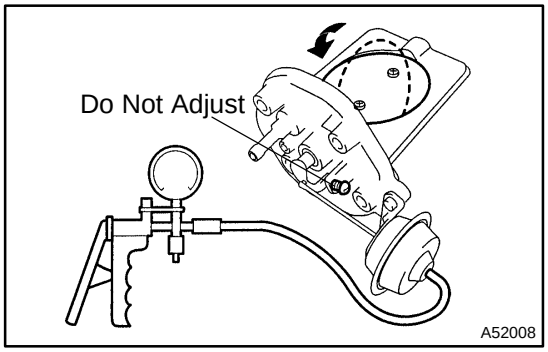

1. INTAKE AIR CONTROL VALVE ASSY

(a) With 26.7 kPa (200 mm Hg, 7.9 in. Hg) of vacuum applied to the actuator, check that the actuator rod moves.
(b) One minute after applying the vacuum, check that the actuator rod does not return.
(c) If the operation is not as specified, replace the intake air control valve assembly.

NOTICE:
Do not adjust the adjust screw.

2. INTAKE AIR CONTROL VALVE ASSY NO.3

(a) Inspect actuator operation
  (1) With 26.7 kPa (200 mm Hg, 7.9 in. Hg) of vacuum applied to the actuator, check that the actuator rod moves.
  (2) One minute after applying the vacuum, check that the actuator rod does not return.
  (3) If the operation is not as specified, replace the intake air control valve No.3.

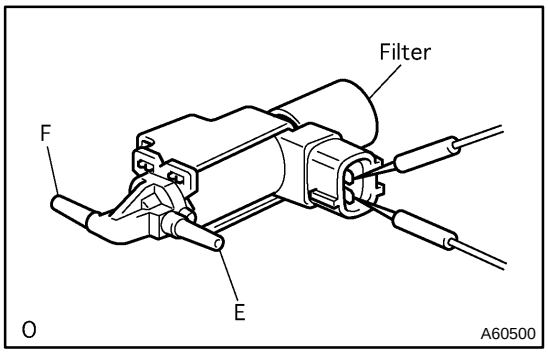

(b) Inspect VSV operation
  (1) Using an ohmmeter, check that there is continuity between each terminals.
  Resistance: 37 – 44 Ω at 20°C (68°F)
  (2) Check that air flows form port E to the filter.
  (3) Apply battery voltage across the terminals.
  (4) Check that air flows from port E to port F.

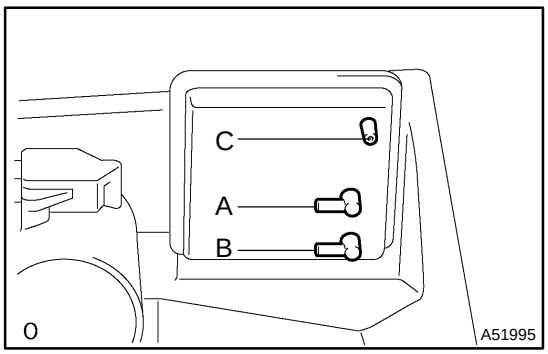

3. AIR CLEANER CAP SUB–ASSY

(a) Cover port C with finger, and check that air flows form port B to port A.
(b) Cover port C with finger, and check that air does not flow from port A to port B.
(c) Cover port A and C with fingers, and apply 60 kPa (450 mm Hg, 18 in. Hg) of vacuum to port B, and check that there is no change of vacuum after one minute.

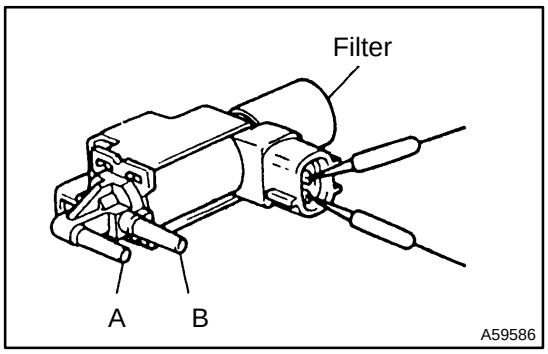

4. VACUUM SWITCHING VALVE ASSY NO.1

(a) Using an ohmmeter, check that there is continuity between each terminals.
Resistance: 33 – 39 Ω at 20°C (68°F)
(b) Check that air flows form port B to the filter.
(c) Apply battery voltage across the terminals.
(d) Check that air flows from port B to port A.

INTAKE AIR CONTROL VALVE ASSY (1MZ–FE)

1300R–02

REPLACEMENT

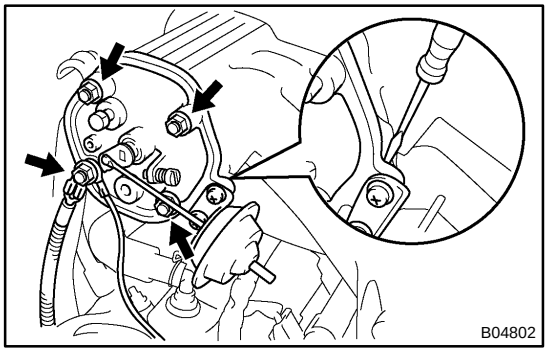

1. REMOVE INTAKE AIR CONTROL VALVE ASSY

(a) Disconnect the vacuum hose.

(b) Remove the 4 nuts and the intake air control valve assembly by prying a screwdriver between intake air control valve and intake air surge tank.

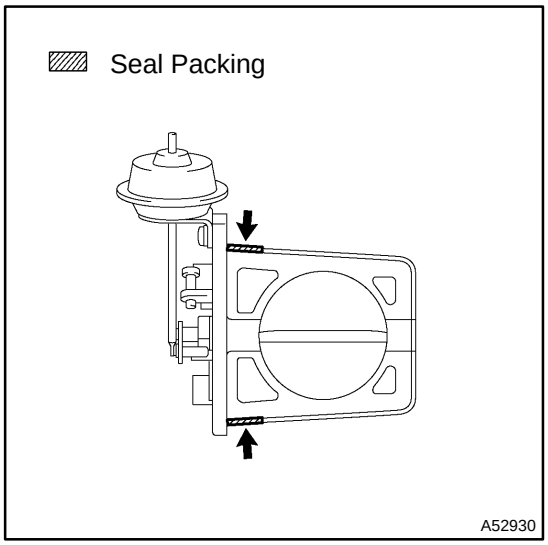

2. INSTALL INTAKE AIR CONTROL VALVE ASSY

(a) Apply seal packing to the intake air control valve assembly as shown in the illustration.
Seal packing: Part No. 08226–00080 or equivalent.

(b) Install a new gasket and intake air control valve assembly.
Torque: 15 N·m (153 kgf·cm, 11 ft·lbf)

ENGINE ASSEMBLY (2AZ–FE)

1404R–02

INSPECTION

1. **INSPECT COOLANT (See page 16–20)**
2. **INSPECT ENGINE OIL**
3. **INSPECT BATTERY**

   Standard specific gravity: 1.25 – 1.29 at 20°C (68°F)
4. **INSPECT AIR CLEANER FILTER ELEMENT SUB–ASSY**
5. **INSPECT SPARK PLUG**
   (See page 18–1)
6. **INSPECT V–RIBBED BELT**
7. **INSPECT IGNITION TIMING**

(a) Warm up engine.

(b) When using hand–held tester.

(1) Connect the hand–held tester to the DLC3.

Ignition timing: 8 – 12° BTDC

HINT:

Please refer to the hand–held tester operator's manual for further details.

(c) When not using hand–held tester.

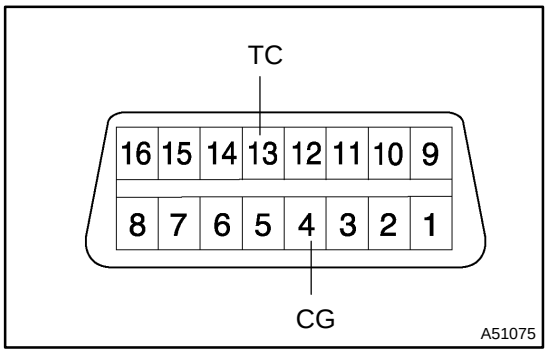

(1) Using SST, connect terminals 13 (TC) and 4 (CG) of DLC3.

SST 09843–18040

NOTICE:

- **Be sure not to connect incorrectly. It causes breakage of the engine.**
- **Turn OFF all electrical systems.**
- **Operate the inspection when the cooling fan motor is turned OFF.**

(2) Remove the cylinder head cover No.2.

(3) Pull out the wire harness as shown in the illustration. Connect the clip of the timing light to the engine.

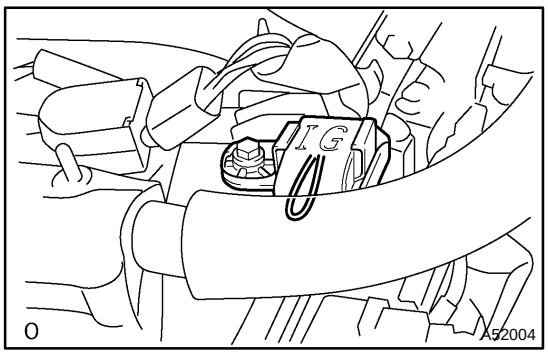

NOTICE:

- **Use a timing light which can detect the first signal.**
- **After checking, be sure to tape the wire harness.**

(4) Inspect ignition timing at idle.

Ignition timing: 8 – 12° BTDC

NOTICE:

When checking the ignition timing, the transmission is at neutral position.

HINT:

After engine rpm is kept at 1,000 – 1,300 r/min. for 5 seconds, check that it returns idle speed.

(5) Disconnect terminals 13 (TC) and 4 (CG) of DLC3.
(6) Inspect ignition timing at idle.
Ignition timing: 5 – 15° BTDC
(7) Confirm that ignition timing moves to advanced angle side when the engine rpm is increased.
(8) Remove the timing light.

8. INSPECT ENGINE IDLE SPEED

(a) Warm up engine.
(b) When using hand–held tester.
(1) Connect the hand–held tester to the DLC3.
Idle speed:
A/T 610 – 710 r/min.
M/T 650 – 750 r/min.

NOTICE:

- **Check idle speed with cooling fan OFF.**
- **Switch off all accessories and air conditioning.**

HINT:
Please refer to the hand–held tester operator's manual for further details.

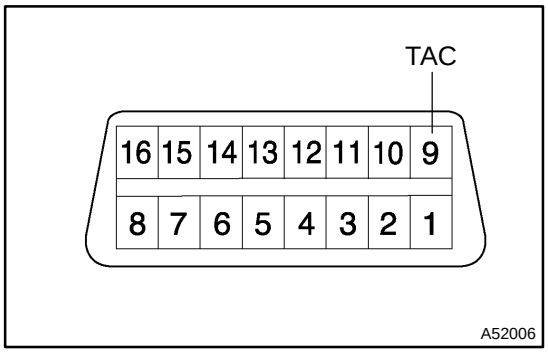

(c) When not using hand–held tester.
(1) Using SST, connect tachometer test prove to terminal 9 (TAC) of DLC3.
SST 09843–18040
(2) Check the idle speed.
Idle speed:
A/T 610 – 710 r/min.
M/T 650 – 750 r/min.

9. INSPECT COMPRESSION

(a) Warm up and stop engine.
(b) Disconnect the injector connectors.
(c) Remove ignition coils.
(d) Remove spark plugs.
(e) Inspect cylinder compression pressure.
(1) Insert a compression gauge into the spark plug hole.
(2) Fully open the throttle.

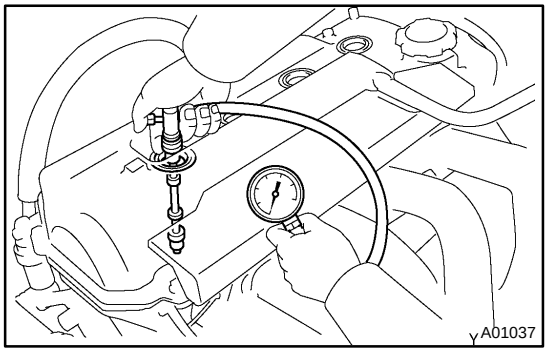

(3) While cranking the engine, measure the compression pressure.

Compression pressure:
1.360 MPa (13.9 kgf/cm^2, 198 psi)
Minimum pressure:
0.98 MPa (10 kgf/cm^2, 142 psi)
Difference between each cylinder:
100 kPa (1.0 kgf/cm^2, 14 psi)

NOTICE:

- **Always use a fully charged battery to obtain engine speed of 250 rpm or more.**
- **Check other cylinder's compression pressure in the same way.**
- **This measurement must be done in as short a time as possible.**

(4) If the cylinder compression is low, pour a small amount of engine oil into the cylinder through the spark plug hole and inspect again.

HINT:

- If adding oil increases the compression, it is likely that the piston rings and/or cylinder bore are worn or damaged.
- If pressure stays low, a valve may be sticking or seating improperly, or there may be leakage past the gasket.

10. INSPECT CO/HC

(a) Start the engine.
(b) Race engine at 2,500 r/min for approx. 180 seconds.
(c) Insert CO/HC meter testing probe at least 40 cm (1.3 ft) into tailpipe during idling.
(d) Immediately check CO/HC concentration at idle and/or 2,500 r/min.

HINT:

- Complete the measuring within 3 minutes.
- When doing the 2 mode (idle and 2,500 r/min.) test, these measuring orders are prescribed by the applicable local regulations.

(e) If the CO/HC concentration does not comply with regulations, troubleshoot in the order given below.
(1) Check heated oxygen sensor operation. (See page 12–1)
(2) See the table below for possible causes, and then inspect and correct the applicable causes if necessary.

CO	HC	Problems	Causes
Normal	High	Rough idle	1. Faulty ignitions: • Incorrect timing • Fouled, shorted or improperly gapped plugs 2. Incorrect valve clearance 3. Leaky intake and exhaust valves 4. Leaky cylinders
Low	High	Rough idle (Fluctuating HC reading)	1. Vacuum leaks: • PCV hoses • Intake manifold • Throttle body • ISC valve • Brake booster line 2. Lean mixture causing misfire
High	High	Rough idle (Black smoke from exhaust)	1. Restricted air filter 2. Plugged PCV valve 3. Faulty EFI systems: • Faulty pressure regulator • Defective water temperature sensor • DEFECTIVE Air–flow meter • Faulty ECU • Faulty injectors • Faulty throttle position sensor

FAN AND GENERATOR V BELT (2AZ–FE)

1405U–02

REPLACEMENT

1. REMOVE FRONT WHEEL RH
2. REMOVE FRONT FENDER APRON SEAL RH
3. REMOVE ENGINE COVER SUB–ASSY NO.1

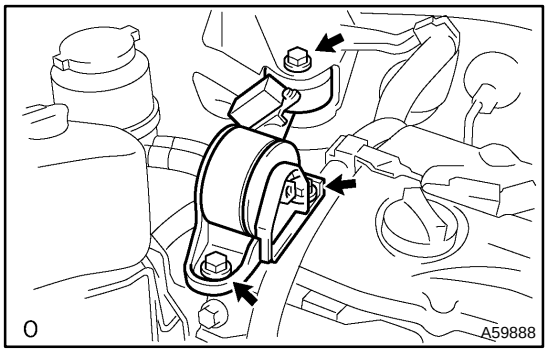

4. REMOVE ENGINE MOVING CONTROL ROD W/BRACKET

(a) Remove the 3 bolts and engine mounting control rod w/ bracket.

5. REMOVE ENGINE MOUNTING STAY NO.2 RH
6. REMOVE ENGINE MOUNTING BRACKET NO.2 RH

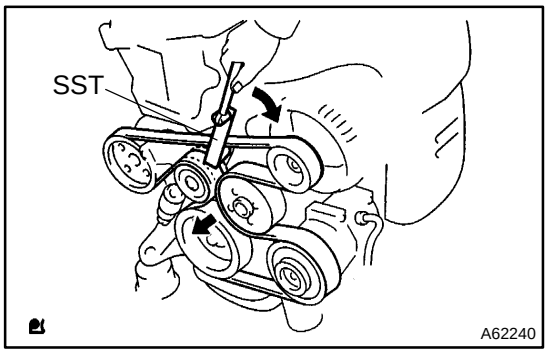

7. REMOVE FAN AND GENERATOR V BELT

(a) Slowly turn the drive belt tensioner clockwise in more than 3 seconds, and remove the drive bolt by using SST.
SST 09249–63010

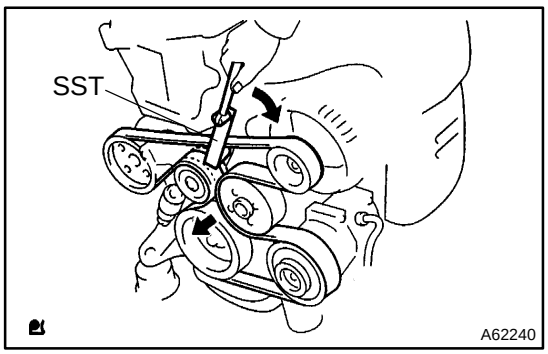

8. INSTALL FAN AND GENERATOR V BELT

(a) Slowly turn the drive belt tensioner clockwise in more than 3 seconds, and install the drive bolt by using SST.
SST 09249–63010

9. INSTALL ENGINE MOUNTING BRACKET NO.2 RH

Torque: 52 N·m (531 kgf·cm, 38 ft·lbf)

10. INSTALL ENGINE MOUNTING STAY NO.2 RH

Torque: 64 N·m (653 kgf·cm, 47 ft·lbf)

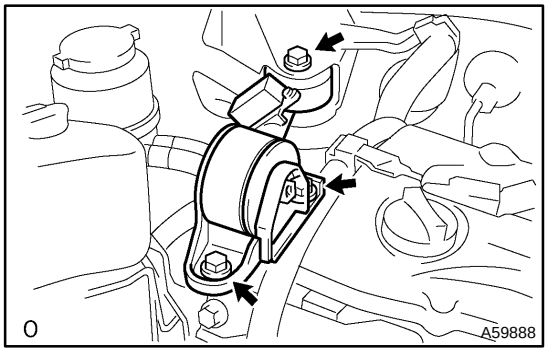

11. INSTALL ENGINE MOVING CONTROL ROD W/BRACKET

(a) Install the engine mounting control rod with the 3 bolts w/ bracket.
Torque: 64 N·m (653 kgf·cm, 47 ft·lbf)

12. INSTALL FRONT WHEEL RH
Torque: 103 N·m (1,050 kgf·cm, 76 ft·lbf)

VALVE CLEARANCE (2AZ–FE)

1405V–02

ADJUSTMENT

1. REMOVE FRONT WHEEL RH

2. REMOVE FRONT FENDER APRON SEAL RH

3. REMOVE ENGINE COVER SUB–ASSY NO.1

4. REMOVE IGNITION COIL ASSY

5. DISCONNECT VENTILATION HOSE

6. DISCONNECT VENTILATION HOSE NO.2

7. DISCONNECT ENGINE WIRE

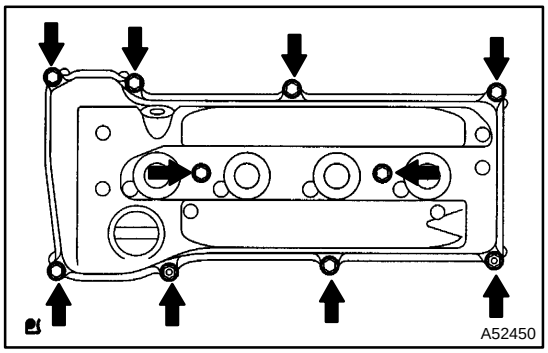

8. REMOVE CYLINDER HEAD COVER SUB–ASSY

(a) Remove the bolt and disconnect the engine wire harness clamp.

(b) Remove the 8 bolts, 2 nuts, cylinder head cover and gasket.

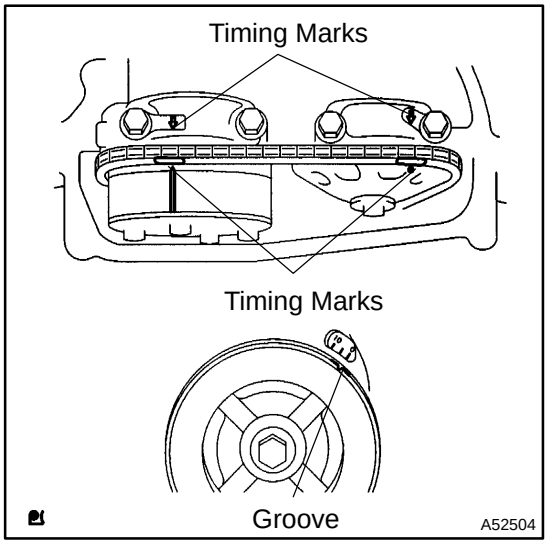

9. SET NO.1 CYLINDER TO TDC/COMPRESSION

(a) Turn the crankshaft pulley, and align its groove with the timing mark ”0” of the timing chain cover.

(b) Check that the timing marks of the camshaft timing sprockets are aligned with the timing marks of the No.1 bearing cap as shown in the illustration.

10. INSPECT VALVE CLEARANCE

HINT:

Inspect and adjust the valve clearance when the engine is cold.

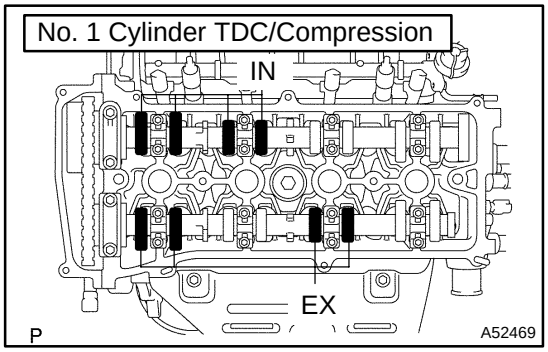

(a) Check only the valve indicated.
  (1) Using a feeler gauge, measure the clearance between the valve lifter and camshaft.
  (2) Record the out–of specification valve clearance measurements. They will be used later to determine the required replacement adjusting shim.

Valve clearance (Cold):
Intake 0.19 – 0.29 mm (0.0075 – 0.0114 in.)
Exhaust 0.30 – 0.40 mm (0.0118 – 0.0157 in.)

(b) Turn the crankshaft clockwise 1 revolution (360°) and set No.4 cylinder to TDC/compression.

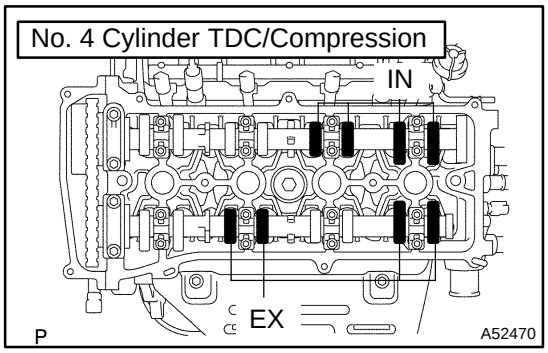

(c) Check only the valve indicated.
  (1) Using a feeler gauge, measure the clearance between the valve lifter and camshaft.
  (2) Record the out–of specification valve clearance measurements. They will be used later to determine the required replacement adjusting shim.

Valve clearance (Cold):
Intake 0.19 – 0.29 mm (0.0075 – 0.0114 in.)
Exhaust 0.30 – 0.40 mm (0.0118 – 0.0157 in.)

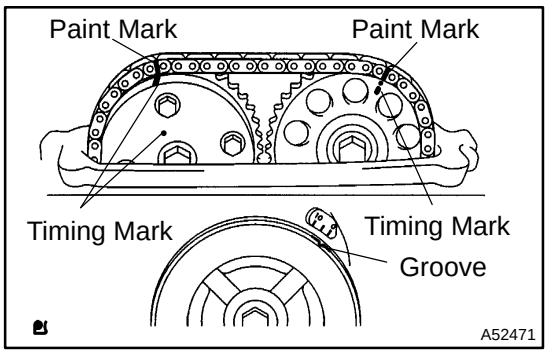

11. ADJUST VALVE CLEARANCE

NOTICE:

Be sure not to turn the crankshaft without the chain tensioner.

(a) Turn the crankshaft clockwise 1 revolution (360°) and set the No.1 cylinder to the TDC/compression.

(b) Place matchmarks on the timing chain and camshaft timing gear.

(c) Remove the 2 bolts and chain tensioner.

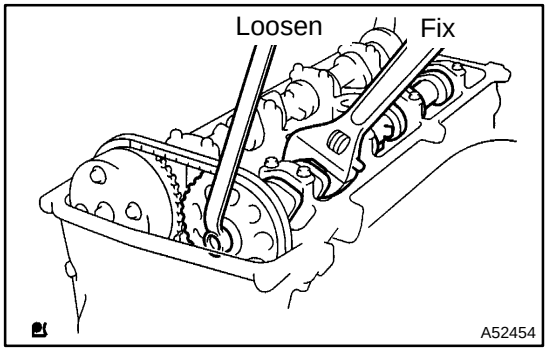

(d) Fix the camshaft with a spanner and so on, then loosen the camshaft timing gear set bolt.

NOTICE:

Be careful not to damage the valve lifter.

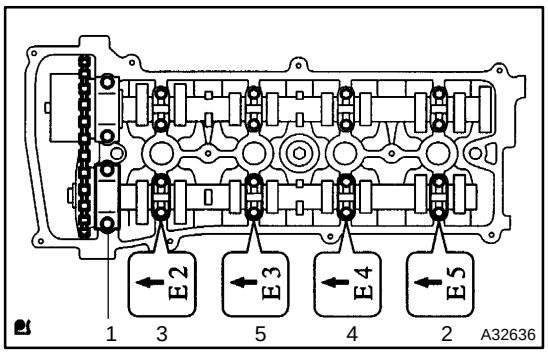

(e) Loosen the camshaft bearing cap bolts on No.2 camshaft in the sequence shown in the illustration in several passes, and remove the caps.

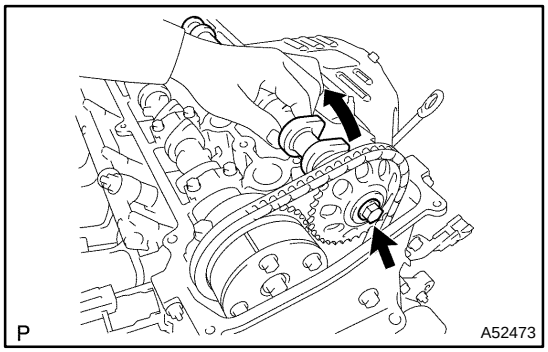

(f) Raising the camshaft, remove the set bolt.
(g) Remove the timing chain sprocket from the camshaft with timing chain.
(h) Remove the timing chain sprocket from the timing chain.

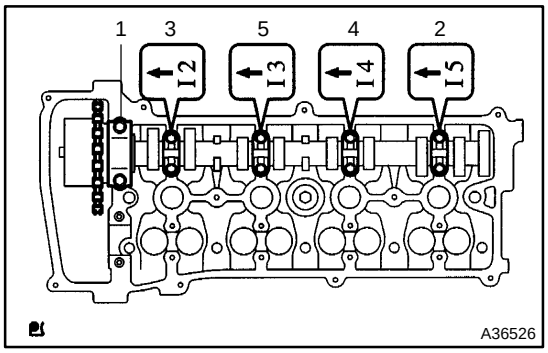

(i) Loosen the camshaft bearing cap bolts on camshaft in the sequence shown in the illustration in several passes, and remove the caps.
(j) Remove the intake camshaft.

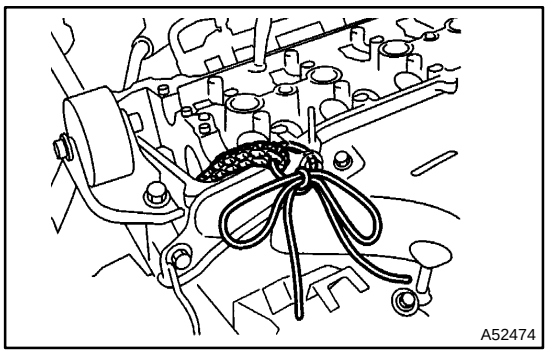

(k) Tie the timing chain with a string.

NOTICE:

Be careful not to drop anything inside the timing chain cover.

(l) Remove the valve lifers.

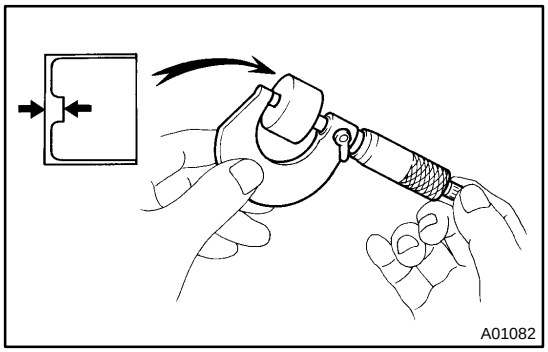

(m) Using a micrometer, measure the thickness of the removed lifter.

(n) Calculate the thickness of a new lifter so that the valve clearance comes within the specified value.

A	Thickness of new lifter
B	Thickness of used lifter
C	Measured valve clearance

Valve clearance:
Intake A = B + (C – 0.24 mm (0.0094 in.))
Exhaust: A = B + (C – 0.35 mm (0.0138 in.))

EXAMPLE: (Intake)
Measured valve clearance = 0.44 mm (0.0173 in.)
0.44 mm (0.0173 in.) – 0.24 mm (0.0094 in.) = 0.20 mm (0.0079 in.)
(Measured – Specification = Excess clearance)
Used shim measurement = 5.30 mm (0.2087 in.)
0.20 mm (0.0079 in.) + 5.30 mm (0.2087 in.) = 5.50 mm (0.2165 in.)
(Excess clearance + Used shim = Ideal new shim)
Closest new shim = 5.50 mm (0.2165 in.) = Shim No. ”50”

(1) Select a new lifter with a thickness as close as possible to the calculated values.

HINT:

- Lifters are available in 35 sizes in increments of 0.020 mm (0.0008 in.), from 5.060 mm (0.1992 in.) to 5.740 mm (0.2260 in.).
- Refer to valve lifter selection chart on the following 2 pages.

Valve Lifter Selection Chart (Intake)

Measure clearance mm (in.) \ Installed lifter thickness mm (in.)	5.060 (0.1992)	5.080 (0.2000)	5.100 (0.2008)	5.120 (0.2016)	5.140 (0.2024)	5.160 (0.2031)	5.180 (0.2039)	5.200 (0.2047)	5.210 (0.2051)	5.220 (0.2055)	5.230 (0.2059)	5.240 (0.2063)	5.250 (0.2067)	5.260 (0.2071)	5.270 (0.2075)	5.280 (0.2079)	5.290 (0.2083)	5.300 (0.2087)	5.310 (0.2091)	5.320 (0.2094)	5.330 (0.2098)	5.340 (0.2102)	5.350 (0.2106)	5.360 (0.2110)	5.370 (0.2114)	5.380 (0.2118)	5.390 (0.2122)	5.400 (0.2126)	5.410 (0.2130)	5.420 (0.2134)	5.430 (0.2138)	5.440 (0.2142)	5.450 (0.2146)	5.460 (0.2150)	5.470 (0.2154)	5.480 (0.2157)	5.490 (0.2161)	5.500 (0.2165)	5.510 (0.2169)	5.520 (0.2173)	5.530 (0.2177)	5.540 (0.2181)	5.550 (0.2185)	5.560 (0.2189)
0.000−0.030 (0.0000−0.0012)													06	06	08	08	10	10	12	12	14	14	16	16	18	18	20	20	22	22	24	24	26	26	28	28	30	30	32	32	34	34	36	36
0.031−0.050 (0.0012−0.0020)									06	06	06	08	08	10	10	12	12	14	14	16	16	18	18	20	20	22	22	24	24	26	26	28	28	30	30	32	32	34	34	36	36	38	38	40
0.051−0.070 (0.0020−0.0028)								06	08	08	08	10	10	12	12	14	14	16	16	18	18	20	20	22	22	24	24	26	26	28	28	30	30	32	32	34	34	36	36	38	38	40	40	42	
0.071−0.090 (0.0028−0.0035)							06	08	10	10	10	12	12	14	14	16	16	18	18	20	20	22	22	24	24	26	26	28	28	30	30	32	32	34	34	36	36	38	38	40	40	42	42	44	
0.091−0.110 (0.0036−0.0043)						06	08	10	12	12	12	14	14	16	16	18	18	20	20	22	22	24	24	26	26	28	28	30	30	32	32	34	34	36	36	38	38	40	40	42	42	44	44	46	
0.111−0.130 (0.0044−0.0051)					06	08	10	12	14	14	14	16	16	18	18	20	20	22	22	24	24	26	26	28	28	30	30	32	32	34	34	36	36	38	38	40	40	42	42	44	44	46	46	48	
0.131−0.150 (0.0052−0.0059)				06	08	10	12	14	16	16	16	18	18	20	20	22	22	24	24	26	26	28	28	30	30	32	32	34	34	36	36	38	38	40	40	42	42	44	44	46	46	48	48	50	
0.151−0.170 (0.0059−0.0067)			06	08	10	12	14	16	18	18	18	20	20	22	22	24	24	26	26	28	28	30	30	32	32	34	34	36	36	38	38	40	40	42	42	44	44	46	46	48	48	50	50	52	
0.171−0.189 (0.0067−0.0074)		06	08	10	12	14	16	18	20	20	20	22	22	24	24	26	26	28	28	30	30	32	32	34	34	36	36	38	38	40	40	42	42	44	44	46	46	48	48	50	50	52	52	54	
0.190−0.290 (0.0075−0.0114)																																													
0.291−0.310 (0.0115−0.0122)	12	14	16	18	20	22	24	26	28	28	30	30	32	32	34	34	36	36	38	38	40	40	42	42	44	44	46	46	48	48	50	50	52	52	54	54	56	56	58	58	60	60	62	62	
0.311−0.330 (0.0122−0.0130)	14	16	18	20	22	24	26	28	30	30	32	32	34	34	36	36	38	38	40	40	42	42	44	44	46	46	48	48	50	50	52	52	54	54	56	56	58	58	60	60	62	62	64	64	
0.331−0.350 (0.0130−0.0138)	16	18	20	22	24	26	28	30	32	32	34	34	36	36	38	38	40	40	42	42	44	44	46	46	48	48	50	50	52	52	54	54	56	56	58	58	60	60	62	62	64	64	66	66	
0.351−0.370 (0.0138−0.0146)	18	20	22	24	26	28	30	32	34	34	36	36	38	38	40	40	42	42	44	44	46	46	48	48	50	50	52	52	54	54	56	56	58	58	60	60	62	62	64	64	66	66	68	68	
0.371−0.390 (0.0146−0.0154)	20	22	24	26	28	30	32	34	36	36	38	38	40	40	42	42	44	44	46	46	48	48	50	50	52	52	54	54	56	56	58	58	60	60	62	62	64	64	66	66	68	68	70	70	
0.391−0.410 (0.0154−0.0161)	22	24	26	28	30	32	34	36	38	38	40	40	42	42	44	44	46	46	48	48	50	50	52	52	54	54	56	56	58	58	60	60	62	62	64	64	66	66	68	68	70	70	72	72	
0.411−0.430 (0.0162−0.0169)	24	26	28	30	32	34	36	38	40	40	42	42	44	44	46	46	48	48	50	50	52	52	54	54	56	56	58	58	60	60	62	62	64	64	66	66	68	68	70	70	72	72	74	74	
0.431−0.450 (0.0170−0.0177)	26	28	30	32	34	36	38	40	42	42	44	44	46	46	48	48	50	50	52	52	54	54	56	56	58	58	60	60	62	62	64	64	66	66	68	68	70	70	72	72	74	74	74		
0.451−0.470 (0.0178−0.0185)	28	30	32	34	36	38	40	42	44	44	46	46	48	48	50	50	52	52	54	54	56	56	58	58	60	60	62	62	64	64	66	66	68	68	70	70	72	72	74	74	74	74			
0.471−0.490 (0.0185−0.0193)	30	32	34	36	38	40	42	44	46	46	48	48	50	50	52	52	54	54	56	56	58	58	60	60	62	62	64	64	66	66	68	68	70	70	72	72	74	74	74	74					
0.491−0.510 (0.0193−0.0201)	32	34	36	38	40	42	44	46	48	48	50	50	52	52	54	54	56	56	58	58	60	60	62	62	64	64	66	66	68	68	70	70	72	72	74	74	74	74							
0.511−0.530 (0.0201−0.0209)	34	36	38	40	42	44	46	48	50	50	52	52	54	54	56	56	58	58	60	60	62	62	64	64	66	66	68	68	70	70	72	72	74	74	74	74									
0.531−0.550 (0.0209−0.0217)	36	38	40	42	44	46	48	50	52	52	54	54	56	56	58	58	60	60	62	62	64	64	66	66	68	68	70	70	72	72	74	74	74	74											
0.551−0.570 (0.0217−0.0224)	38	40	42	44	46	48	50	52	54	54	56	56	58	58	60	60	62	62	64	64	66	66	68	68	70	70	72	72	74	74	74	74													
0.571−0.590 (0.0225−0.0232)	40	42	44	46	48	50	52	54	56	56	58	58	60	60	62	62	64	64	66	66	68	68	70	70	72	72	74	74	74	74															
0.591−0.610 (0.0233−0.0240)	42	44	46	48	50	52	54	56	58	58	60	60	62	62	64	64	66	66	68	68	70	70	72	72	74	74	74	74																	
0.611−0.630 (0.0241−0.0248)	44	46	48	50	52	54	56	58	60	60	62	62	64	64	66	66	68	68	70	70	72	72	74	74	74	74																			
0.631−0.650 (0.0248−0.0256)	46	48	50	52	54	56	58	60	62	62	64	64	66	66	68	68	70	70	72	72	74	74	74	74																					
0.651−0.670 (0.0256−0.0264)	48	50	52	54	56	58	60	62	64	64	66	66	68	68	70	70	72	72	74	74	74	74																							
0.671−0.690 (0.0264−0.0272)	50	52	54	56	58	60	62	64	66	66	68	68	70	70	72	72	74	74	74	74																									
0.691−0.710 (0.0272−0.0280)	52	54	56	58	60	62	64	66	68	68	70	70	72	72	74	74	74	74																											
0.711−0.730 (0.0280−0.0287)	54	56	58	60	62	64	66	68	70	70	72	72	74	74	74	74																													
0.731−0.750 (0.0288−0.0295)	56	58	60	62	64	66	68	70	72	72	74	74	74	74																															
0.751−0.770 (0.0296−0.0303)	58	60	62	64	66	68	70	72	74	74	74	74																																	
0.771−0.790 (0.0304−0.0311)	60	62	64	66	68	70	72	74	74	74																																			
0.791−0.810 (0.0311−0.0319)	62	64	66	68	70	72	74																																						
0.811−0.830 (0.0319−0.0327)	64	66	68	70	72	74																																							
0.831−0.850 (0.0327−0.0335)	66	68	70	72	74																																							
0.851−0.870 (0.0335−0.0343)	68	70	72	74																																								
0.871−0.890 (0.0343−0.0350)	70	72	74																																									
0.891−0.910 (0.0351−0.0358)	72	74																																										
0.911−0.930 (0.0359−0.0366)	74																																											

Intake valve clearance (Cold):
0.19 to 0.29 mm (0.008 to 0.011 in.)

EXAMPLE:

The 5.250 mm (0.2067 in.) lifter is installed, and the measured clearance is 0.400 mm (0.0157 in.). Replace the 5.250 mm (0.2067 in.) lifter with a new No. 42 lifter.

Lifter No.	Thickness	Lifter No.
06	5.060 (0.1992)	30
08	5.080 (0.2000)	32
10	5.100 (0.2008)	34
12	5.120 (0.2016)	36
14	5.140 (0.2024)	38
16	5.160 (0.2031)	40
18	5.180 (0.2039)	42
20	5.200 (0.2047)	44
22	5.220 (0.2055)	46
24	5.240 (0.2063)	48
26	5.260 (0.2071)	50
28	5.280 (0.2079)	52

Author :

Date :

1533

A77296

Valve Lifter Selection Chart (Exhaust)

Measure clearance mm (in.) \ Installed lifter thickness mm (in.)	5.060 (0.1992)	5.080 (0.2000)	5.100 (0.2008)	5.120 (0.2016)	5.140 (0.2024)	5.160 (0.2031)	5.180 (0.2039)	5.200 (0.2047)	5.210 (0.2051)	5.220 (0.2055)	5.230 (0.2059)	5.240 (0.2063)	5.250 (0.2067)	5.260 (0.2071)	5.270 (0.2075)	5.280 (0.2079)	5.290 (0.2083)	5.300 (0.2087)	5.310 (0.2091)	5.320 (0.2094)	5.330 (0.2098)	5.340 (0.2102)	5.350 (0.2106)	5.360 (0.2110)	5.370 (0.2114)	5.380 (0.2118)	5.390 (0.2122)	5.400 (0.2126)	5.410 (0.2130)	5.420 (0.2134)	5.430 (0.2138)	5.440 (0.2142)	5.450 (0.2146)	5.460 (0.2150)	5.470 (0.2154)	5.480 (0.2157)	5.490 (0.2161)	5.500 (0.2165)	5.510 (0.2169)	5.520 (0.2173)	5.530 (0.2177)	5.540 (0.2181)	5.550 (0.2185)	5.560 (0.2189)
0.000−0.030 (0.0000−0.0012)																							06	06	08	08	10	10	12	12	14	14	16	16	18	18	20	20	22	22	24	24	26	26	28	28
0.031−0.050 (0.0012−0.0020)																					06	06	08	08	10	10	12	12	14	14	16	16	18	18	20	20	22	22	24	24	26	26	28	28	30	30
0.051−0.070 (0.0020−0.0028)																			06	06	08	08	10	10	12	12	14	14	16	16	18	18	20	20	22	22	24	24	26	26	28	28	30	30	32	32
0.071−0.090 (0.0028−0.0035)																	06	06	08	08	10	10	12	12	14	14	16	16	18	18	20	20	22	22	24	24	26	26	28	28	30	30	32	32	34	34
0.091−0.110 (0.0036−0.0043)															06	06	08	08	10	10	12	12	14	14	16	16	18	18	20	20	22	22	24	24	26	26	28	28	30	30	32	32	34	34	36	36
0.111−0.130 (0.0044−0.0051)													06	06	08	08	10	10	12	12	14	14	16	16	18	18	20	20	22	22	24	24	26	26	28	28	30	30	32	32	34	34	36	36	38	38
0.131−0.150 (0.0052−0.0059)											06	06	08	08	10	10	12	12	14	14	16	16	18	18	20	20	22	22	24	24	26	26	28	28	30	30	32	32	34	34	36	36	38	38	40	40
0.151−0.170 (0.0059−0.0067)									06	06	08	08	10	10	12	12	14	14	16	16	18	18	20	20	22	22	24	24	26	26	28	28	30	30	32	32	34	34	36	36	38	38	40	40	42	42
0.171−0.190 (0.0067−0.0075)								06	08	08	10	10	12	12	14	14	16	16	18	18	20	20	22	22	24	24	26	26	28	28	30	30	32	32	34	34	36	36	38	38	40	40	42	42	44	44
0.191−0.210 (0.0075−0.0083)							06	08	10	10	12	12	14	14	16	16	18	18	20	20	22	22	24	24	26	26	28	28	30	30	32	32	34	34	36	36	38	38	40	40	42	42	44	44	46	46
0.211−0.230 (0.0083−0.0091)						06	08	10	12	12	14	14	16	16	18	18	20	20	22	22	24	24	26	26	28	28	30	30	32	32	34	34	36	36	38	38	40	40	42	42	44	44	46	46	48	48
0.231−0.250 (0.0091−0.0098)					06	08	10	12	14	14	16	16	18	18	20	20	22	22	24	24	26	26	28	28	30	30	32	32	34	34	36	36	38	38	40	40	42	42	44	44	46	46	48	48	50	50
0.251−0.270 (0.0099−0.0106)				06	08	10	12	14	16	16	18	18	20	20	22	22	24	24	26	26	28	28	30	30	32	32	34	34	36	36	38	38	40	40	42	42	44	44	46	46	48	48	50	50	52	52
0.271−0.290 (0.0107−0.0114)			06	08	10	12	14	16	18	18	20	20	22	22	24	24	26	26	28	28	30	30	32	32	34	34	36	36	38	38	40	40	42	42	44	44	46	46	48	48	50	50	52	52	54	54
0.291−0.299 (0.0115−0.0118)		06	08	10	12	14	16	18	20	20	22	22	24	24	26	26	28	28	30	30	32	32	34	34	36	36	38	38	40	40	42	42	44	44	46	46	48	48	50	50	52	52	54	54	56	56
0.300−0.400 (0.0118−0.0157)																																														
0.401−0.420 (0.0158−0.0165)	12	14	16	18	20	22	24	26	26	28	28	30	30	32	32	34	34	36	36	38	38	40	40	42	42	44	44	46	46	48	48	50	50	52	52	54	54	56	56	58	58	60	60	62	62	64
0.421−0.440 (0.0166−0.0173)	14	16	18	20	22	24	26	28	28	30	30	32	32	34	34	36	36	38	38	40	40	42	42	44	44	46	46	48	48	50	50	52	52	54	54	56	56	58	58	60	60	62	62	64	64	66
0.441−0.460 (0.0174−0.0181)	16	18	20	22	24	26	28	30	30	32	32	34	34	36	36	38	38	40	40	42	42	44	44	46	46	48	48	50	50	52	52	54	54	56	56	58	58	60	60	62	62	64	64	66	66	68
0.461−0.480 (0.0181−0.0189)	18	20	22	24	26	28	30	32	32	34	34	36	36	38	38	40	40	42	42	44	44	46	46	48	48	50	50	52	52	54	54	56	56	58	58	60	60	62	62	64	64	66	66	68	68	70
0.481−0.500 (0.0189−0.0197)	20	22	24	26	28	30	32	34	34	36	36	38	38	40	40	42	42	44	44	46	46	48	48	50	50	52	52	54	54	56	56	58	58	60	60	62	62	64	64	66	66	68	68	70	70	72
0.501−0.520 (0.0197−0.0205)	22	24	26	28	30	32	34	36	36	38	38	40	40	42	42	44	44	46	46	48	48	50	50	52	52	54	54	56	56	58	58	60	60	62	62	64	64	66	66	68	68	70	70	72	72	74
0.521−0.540 (0.0205−0.0213)	24	26	28	30	32	34	36	38	38	40	40	42	42	44	44	46	46	48	48	50	50	52	52	54	54	56	56	58	58	60	60	62	62	64	64	66	66	68	68	70	70	72	72	74	74	76
0.541−0.560 (0.0213−0.0220)	26	28	30	32	34	36	38	40	40	42	42	44	44	46	46	48	48	50	50	52	52	54	54	56	56	58	58	60	60	62	62	64	64	66	66	68	68	70	70	72	72	74	74	76	76	78
0.561−0.580 (0.0221−0.0228)	28	30	32	34	36	38	40	42	42	44	44	46	46	48	48	50	50	52	52	54	54	56	56	58	58	60	60	62	62	64	64	66	66	68	68	70	70	72	72	74	74	76	76	78	78	80
0.581−0.600 (0.0229−0.0236)	30	32	34	36	38	40	42	44	44	46	46	48	48	50	50	52	52	54	54	56	56	58	58	60	60	62	62	64	64	66	66	68	68	70	70	72	72	74	74	76	76	78	78	80	80	82
0.601−0.620 (0.0237−0.0244)	32	34	36	38	40	42	44	46	46	48	48	50	50	52	52	54	54	56	56	58	58	60	60	62	62	64	64	66	66	68	68	70	70	72	72	74	74	76	76	78	78	80	80	82	82	84
0.621−0.640 (0.0244−0.0252)	34	36	38	40	42	44	46	48	48	50	50	52	52	54	54	56	56	58	58	60	60	62	62	64	64	66	66	68	68	70	70	72	72	74	74	76	76	78	78	80	80	82	82	84	84	86
0.641−0.660 (0.0252−0.0260)	36	38	40	42	44	46	48	50	50	52	52	54	54	56	56	58	58	60	60	62	62	64	64	66	66	68	68	70	70	72	72	74	74	76	76	78	78	80	80	82	82	84	84	86	86	88
0.661−0.680 (0.0260−0.0268)	38	40	42	44	46	48	50	52	52	54	54	56	56	58	58	60	60	62	62	64	64	66	66	68	68	70	70	72	72	74	74	76	76	78	78	80	80	82	82	84	84	86	86	88	88	90
0.681−0.700 (0.0268−0.0276)	40	42	44	46	48	50	52	54	54	56	56	58	58	60	60	62	62	64	64	66	66	68	68	70	70	72	72	74	74	76	76	78	78	80	80	82	82	84	84	86	86	88	88	90	90	92
0.701−0.720 (0.0276−0.0283)	42	44	46	48	50	52	54	56	56	58	58	60	60	62	62	64	64	66	66	68	68	70	70	72	72	74	74	76	76	78	78	80	80	82	82	84	84	86	86	88	88	90	90	92	92	94
0.721−0.740 (0.0284−0.0291)	44	46	48	50	52	54	56	58	58	60	60	62	62	64	64	66	66	68	68	70	70	72	72	74	74	76	76	78	78	80	80	82	82	84	84	86	86	88	88	90	90	92	92	94	94	96
0.741−0.760 (0.0292−0.0299)	46	48	50	52	54	56	58	60	60	62	62	64	64	66	66	68	68	70	70	72	72	74	74	76	76	78	78	80	80	82	82	84	84	86	86	88	88	90	90	92	92	94	94	96	96	98
0.761−0.780 (0.0300−0.0307)	48	50	52	54	56	58	60	62	62	64	64	66	66	68	68	70	70	72	72	74	74	76	76	78	78	80	80	82	82	84	84	86	86	88	88	90	90	92	92	94	94	96	96	98	98	100
0.781−0.800 (0.0307−0.0315)	50	52	54	56	58	60	62	64	64	66	66	68	68	70	70	72	72	74	74	76	76	78	78	80	80	82	82	84	84	86	86	88	88	90	90	92	92	94	94	96	96	98	98	100	100	102
0.801−0.820 (0.0315−0.0323)	52	54	56	58	60	62	64	66	66	68	68	70	70	72	72	74	74	76	76	78	78	80	80	82	82	84	84	86	86	88	88	90	90	92	92	94	94	96	96	98	98	100	100	102	102	104
0.821−0.840 (0.0323−0.0331)	54	56	58	60	62	64	66	68	68	70	70	72	72	74	74	76	76	78	78	80	80	82	82	84	84	86	86	88	88	90	90	92	92	94	94	96	96	98	98	100	100	102	102	104	104	106
0.841−0.860 (0.0331−0.0339)	56	58	60	62	64	66	68	70	70	72	72	74	74	76	76	78	78	80	80	82	82	84	84	86	86	88	88	90	90	92	92	94	94	96	96	98	98	100	100	102	102	104	104	106	106	108
0.861−0.880 (0.0339−0.0346)	58	60	62	64	66	68	70	72	72	74	74	76	76	78	78	80	80	82	82	84	84	86	86	88	88	90	90	92	92	94	94	96	96	98	98	100	100	102	102	104	104	106	106	108	108	110
0.881−0.900 (0.0347−0.0354)	60	62	64	66	68	70	72	74	74	76	76	78	78	80	80	82	82	84	84	86	86	88	88	90	90	92	92	94	94	96	96	98	98	100	100	102	102	104	104	106	106	108	108	110	110	112
0.901−0.920 (0.0355−0.0362)	62	64	66	68	70	72	74	76	76	78	78	80	80	82	82	84	84	86	86	88	88	90	90	92	92	94	94	96	96	98	98	100	100	102	102	104	104	106	106	108	108	110	110	112	112	114
0.921−0.940 (0.0363−0.0370)	64	66	68	70	72	74	76	78	78	80	80	82	82	84	84	86	86	88	88	90	90	92	92	94	94	96	96	98	98	100	100	102	102	104	104	106	106	108	108	110	110	112	112	114	114	116
0.941−0.960 (0.0370−0.0378)	66	68	70	72	74	76	78	80	80	82	82	84	84	86	86	88	88	90	90	92	92	94	94	96	96	98	98	100	100	102	102	104	104	106	106	108	108	110	110	112	112	114	114	116	116	118
0.961−0.980 (0.0378−0.0386)	68	70	72	74	76	78	80	82	82	84	84	86	86	88	88	90	90	92	92	94	94	96	96	98	98	100	100	102	102	104	104	106	106	108	108	110	110	112	112	114	114	116	116	118	118	120
0.981−1.000 (0.0386−0.0394)	70	72	74	76	78	80	82	84	84	86	86	88	88	90	90	92	92	94	94	96	96	98	98	100	100	102	102	104	104	106	106	108	108	110	110	112	112	114	114	116	116	118	118	120	120	122
1.001−1.020 (0.0394−0.0402)	72	74	76	78	80	82	84	86	86	88	88	90	90	92	92	94	94	96	96	98	98	100	100	102	102	104	104	106	106	108	108	110	110	112	112	114	114	116	116	118	118	120	120	122	122	124
1.021−1.040 (0.0402−0.0409)	74	76	78	80	82	84	86	88	88	90	90	92	92	94	94	96	96	98	98	100	100	102	102	104	104	106	106	108	108	110	110	112	112	114	114	116	116	118	118	120	120	122	122	124	124	126
1.041−1.060 (0.0410−0.0417)	76	78	80	82	84	86	88	90	90	92	92	94	94	96	96	98	98	100	100	102	102	104	104	106	106	108	108	110	110	112	112	114	114	116	116	118	118	120	120	122	122	124	124	126	126	128
1.061−1.080 (0.0418−0.0425)	78	80	82	84	86	88	90	92	92	94	94	96	96	98	98	100	100	102	102	104	104	106	106	108	108	110	110	112	112	114	114	116	116	118	118	120	120	122	122	124	124	126	126	128	128	130

Lifter No.	
06	5
08	5
10	5
12	5
14	5
16	5
18	5
20	5
22	5
24	5
26	5
28	5

Exhaust valve clearance (Cold):
0.30 to 0.40 mm (0.012 to 0.016 in.)

EXAMPLE:

The 5.340 mm (0.2102 in.) lifter is installed, and the measured clearance is 0.440 mm (0.0173 in.). Replace the 5.340 mm (0.2102 in.) lifter with a new No. 44 lifter.

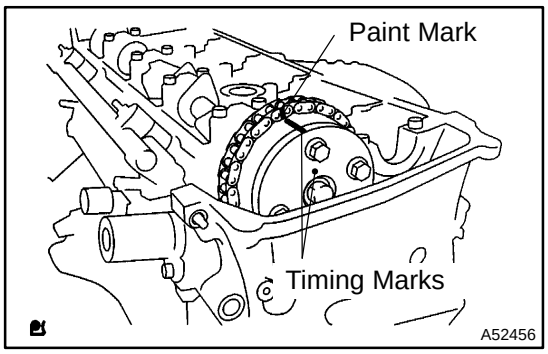

(o) Install the timing chain on the camshaft timing gear, with the painted links aligned with the timing marks on the camshaft timing sprockets.

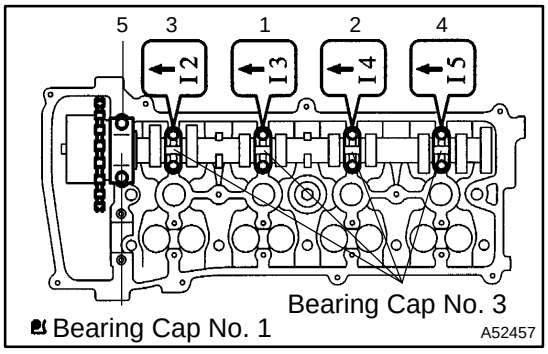

(p) Examine the front marks and numbers and tighten the bolts in the order shown in the illustration.
Torque:
Bearing cap No. 1 30 N·m (301 kgf·cm, 22 ft·lbf)
Bearing cap No. 3 9.0 N·m (92 kgf·cm, 80 in.·lbf)

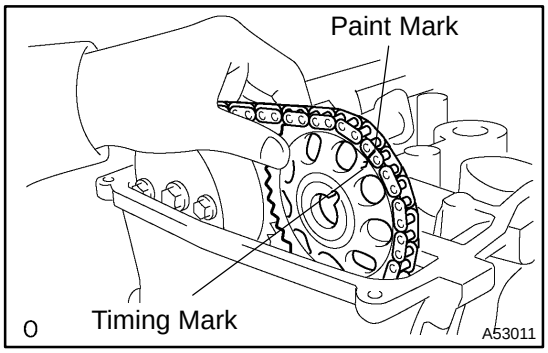

(q) Put the camshaft No.2 on the cylinder head with the painted links of chain aligned with the timing mark on the camshaft timing sprockets.

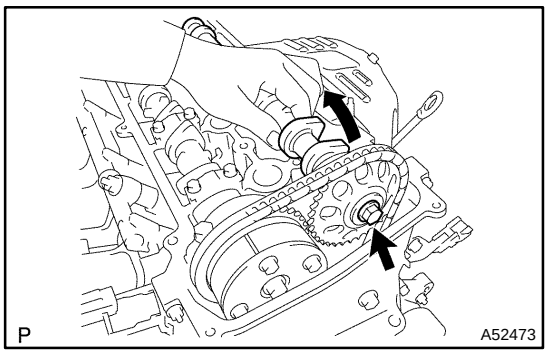

(r) Raising the camshaft, tighten the set bolt temporarily.

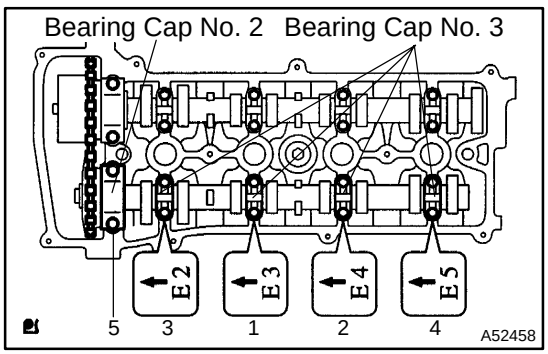

(s) Examine the from marks and numbers and tighten the bolts in the sequence shown in the illustration.
Torque:
Bearing cap No. 2 30 N·m (301 kgf·cm, 22 ft·lbf)
Bearing cap No. 3 9.0 N·m (92 kgf·cm, 80 in.·lbf)

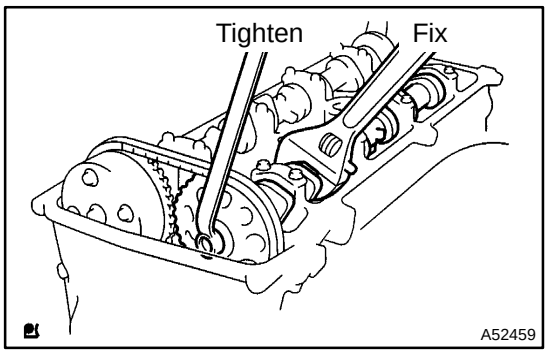

(t) Fix the camshaft with a spanner and so on, then tighten the camshaft timing gear set bolt.

Torque: 54 N·m (551 kgf·cm, 40 ft·lbf)

NOTICE:

Be careful not to damage the valve lifter.

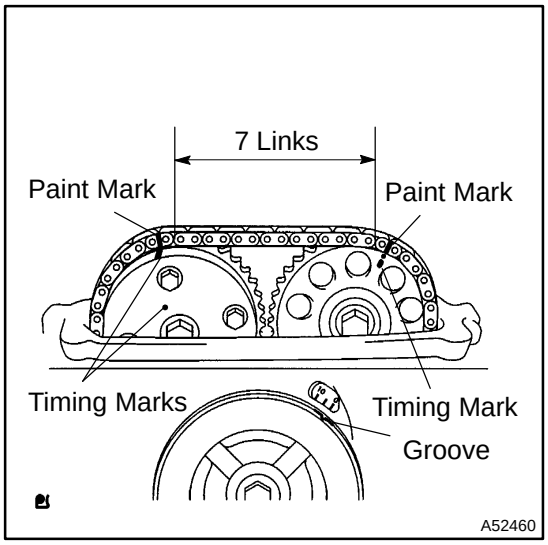

(u) As shown in the illustration, check the matchmarks on the timing chain and camshaft timing sprockets and the alignment of the pulley groove with timing mark of the chain cover.

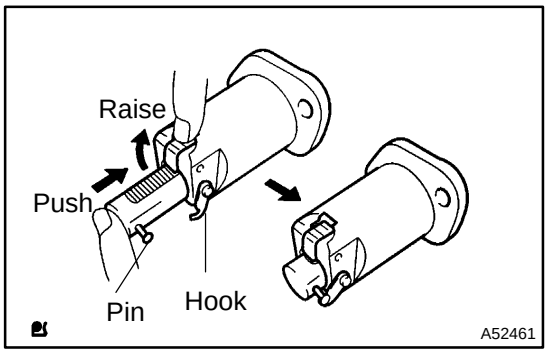

(v) Install chain tensioner.

(1) Release the ratchet pawl, fully push in the plunger and apply the hook to the pin so that the plunger cannot spring out.

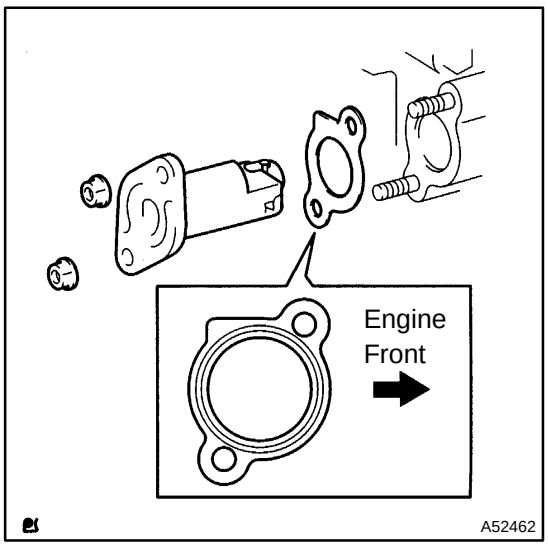

(2) Install a new gasket and chain tensioner with the 2 nuts.

Torque: 9.0 N·m (92 kgf·cm, 80 in.·lbf)

NOTICE:

When installing the tensioner, set the hook again if the hook releases the plunger.

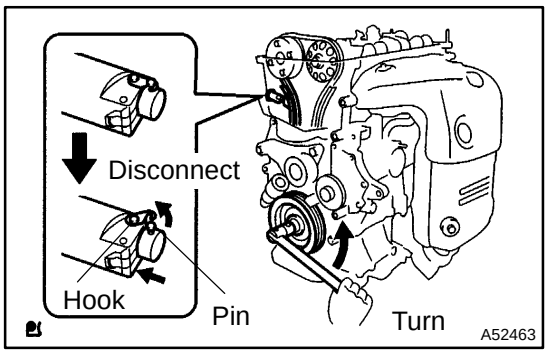

(3) Turn the crankshaft counterclockwise, and disconnect the plunger knock pin from the hook.

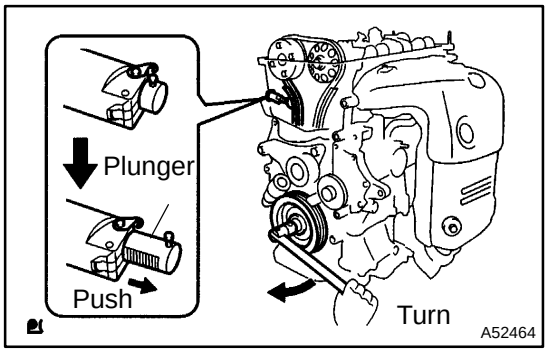

(4) Turn the crankshaft clockwise, and check that the slipper is pushed by the plunger.

12. INSTALL CYLINDER HEAD COVER SUB–ASSY

(a) Remove any old packing (FIPG) material.

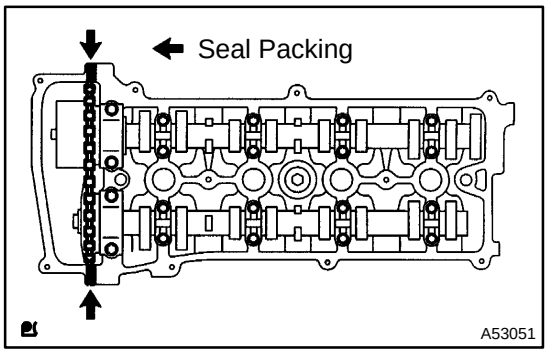

(b) Apply seal packing to 2 locations as shown in the illustration.
Seal packing: Part No. 08826–00080 or equivalent

NOTICE:
- **Remove any oil the contact surface.**
- **Install the cylinder head cover within 5 minutes after applying seal packing.**
- **Do not put into engine oil 2 hours after installing.**

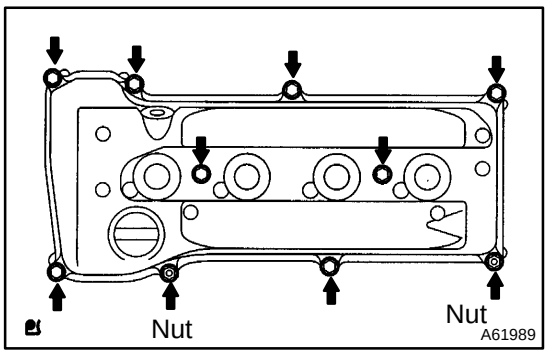

(c) Install the cylinder head cover with the 8 bolts and 2 nuts.
Torque: 11 N·m (110 kgf·cm, 8 ft·lbf)

13. INSTALL IGNITION COIL ASSY
Torque: 9.0 N·m (92 kgf·cm, 80 in.·lbf)

14. INSTALL FRONT WHEEL RH
Torque: 103 N·m (1,050 kgf·cm, 76 ft·lbf)

15. INSPECT OIL LEAK

PARTIAL ENGINE ASSY (2AZ–FE)

140HS–01

COMPONENTS

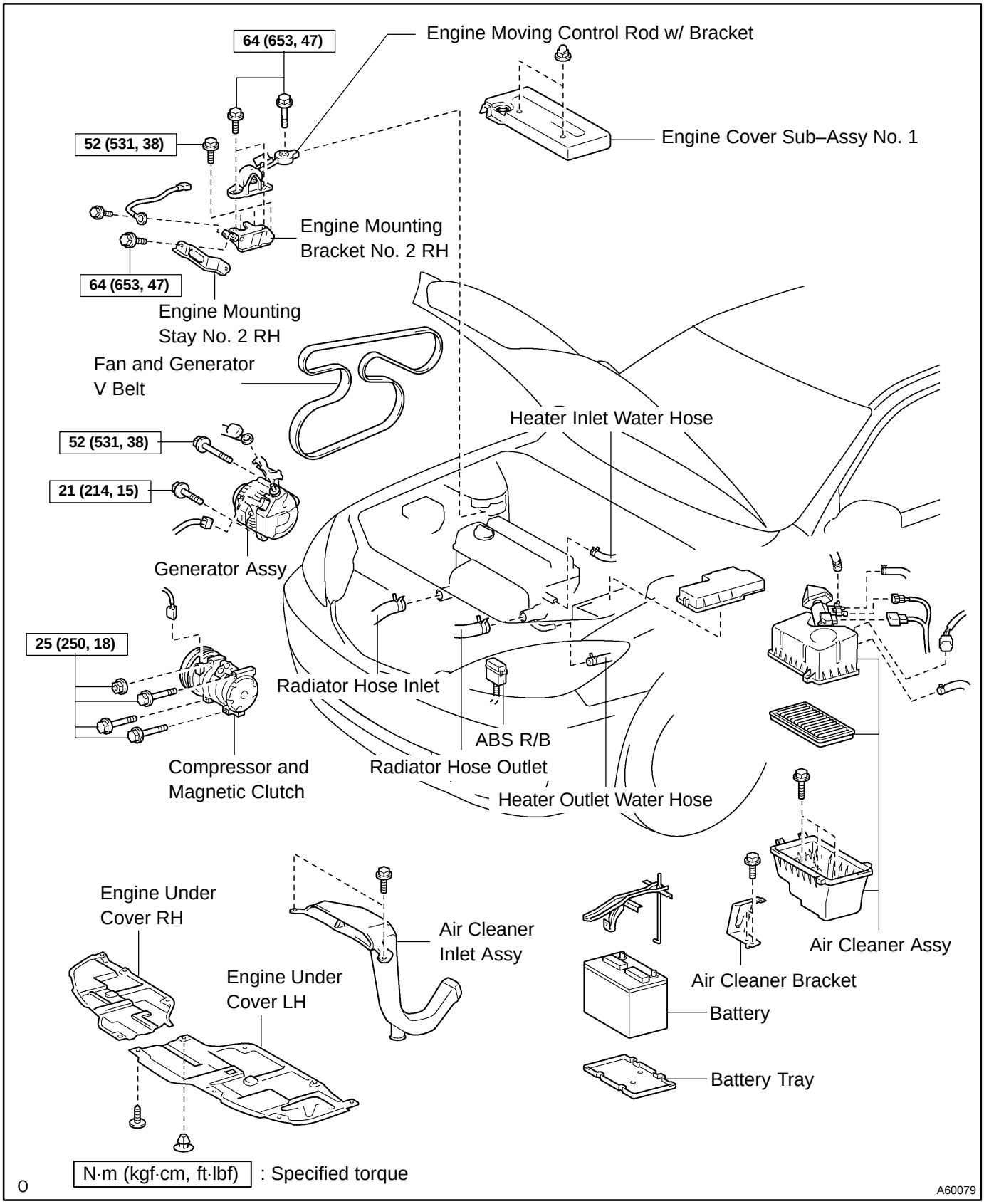

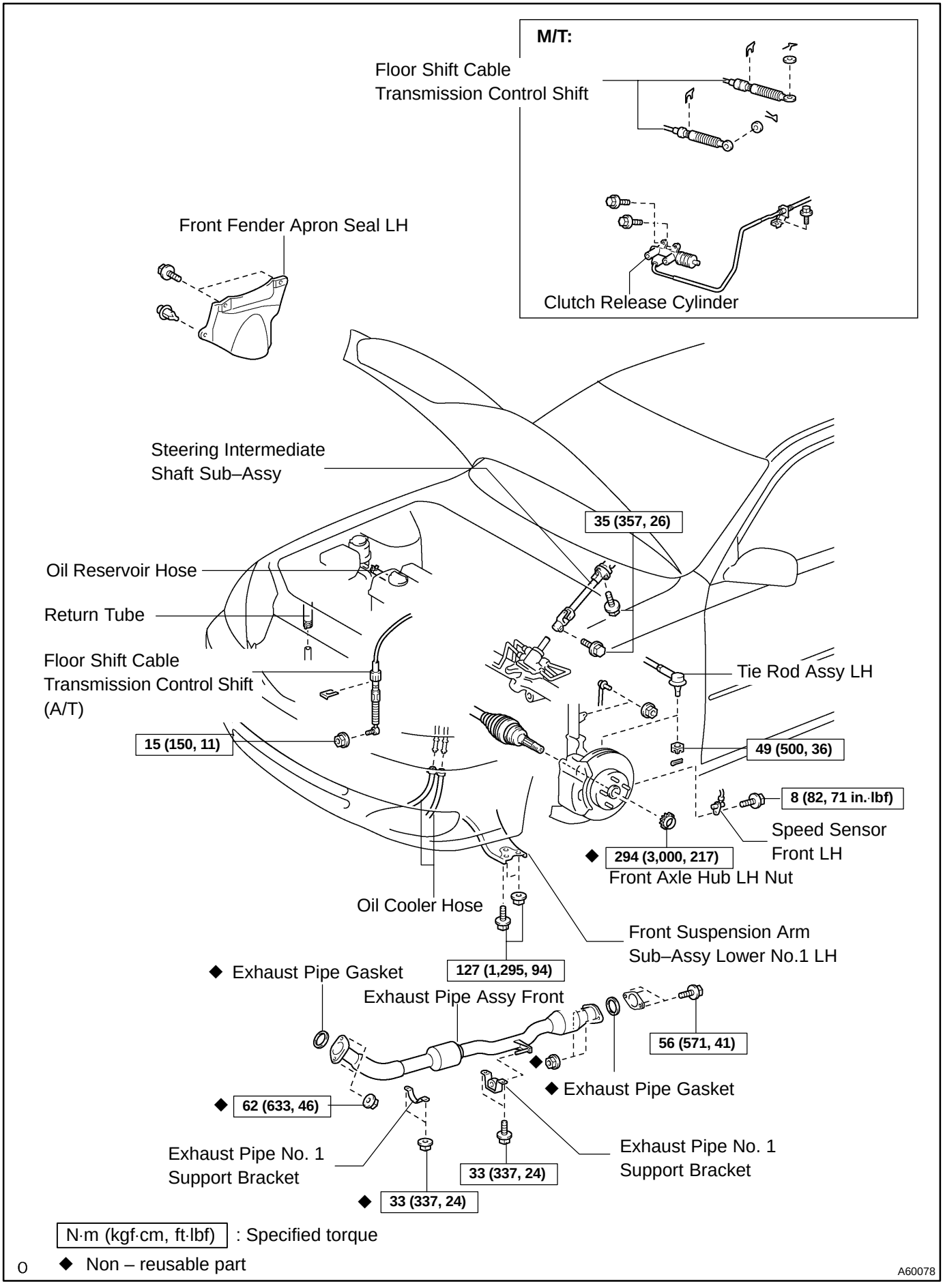
M/T:
Floor Shift Cable
Transmission Control Shift
Clutch Release Cylinder
Front Fender Apron Seal LH
Steering Intermediate
Shaft Sub–Assy
35 (357, 26)
Oil Reservoir Hose
Return Tube
Floor Shift Cable
Transmission Control Shift
(A/T)
15 (150, 11)
Tie Rod Assy LH
49 (500, 36)
8 (82, 71 in.·lbf)
Speed Sensor
Front LH
◆ 294 (3,000, 217)
Front Axle Hub LH Nut
Oil Cooler Hose
Front Suspension Arm
Sub–Assy Lower No.1 LH
◆ Exhaust Pipe Gasket
127 (1,295, 94)
Exhaust Pipe Assy Front
56 (571, 41)
◆ Exhaust Pipe Gasket
◆ 62 (633, 46)
Exhaust Pipe No. 1
Support Bracket
33 (337, 24)
Exhaust Pipe No. 1
Support Bracket
◆ 33 (337, 24)
N·m (kgf·cm, ft·lbf) : Specified torque
◆ Non – reusable part
A60078

A/T:

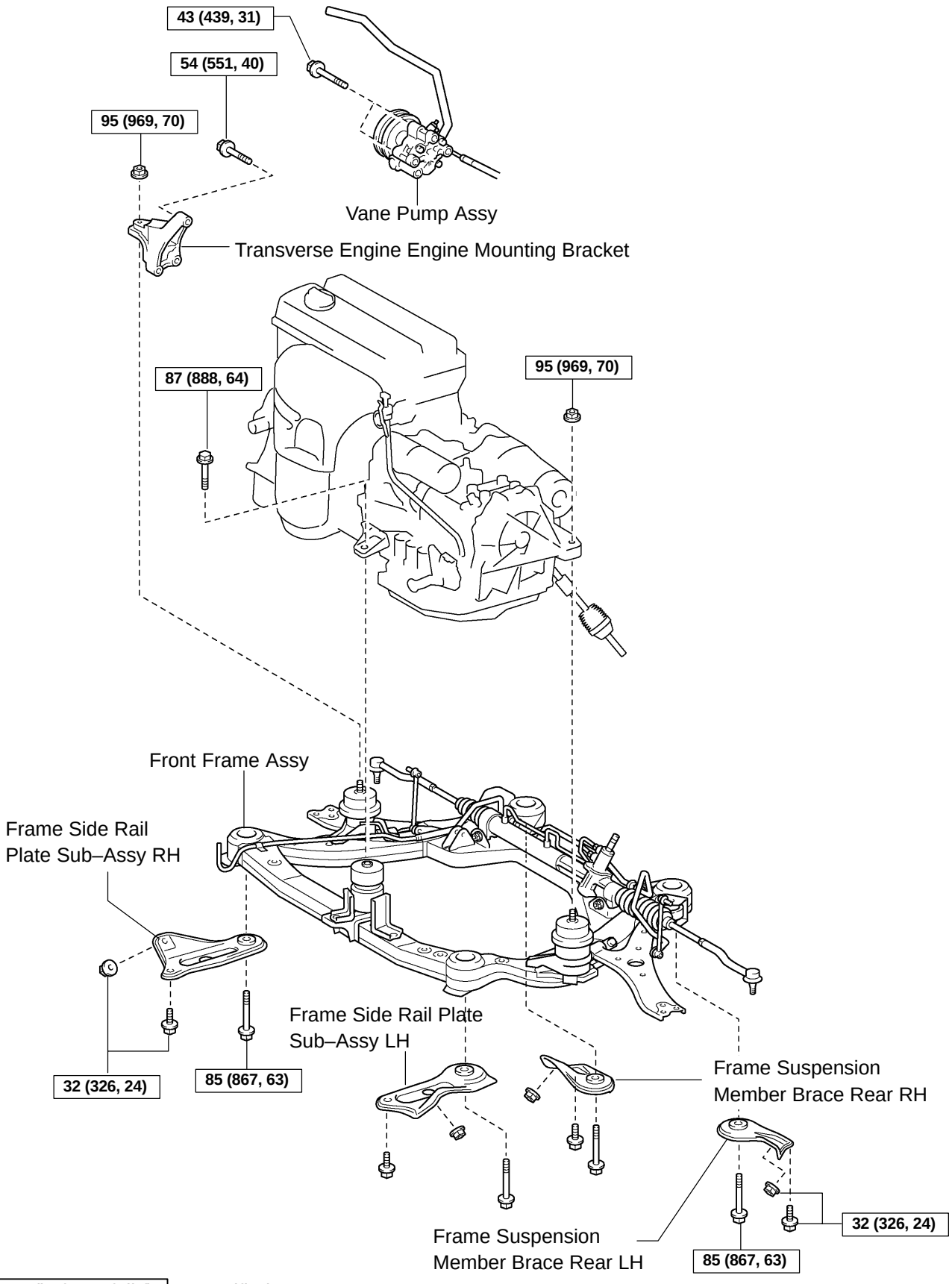

o N·m (kgf·cm, ft·lbf) : Specified torque

A60070

M/T:

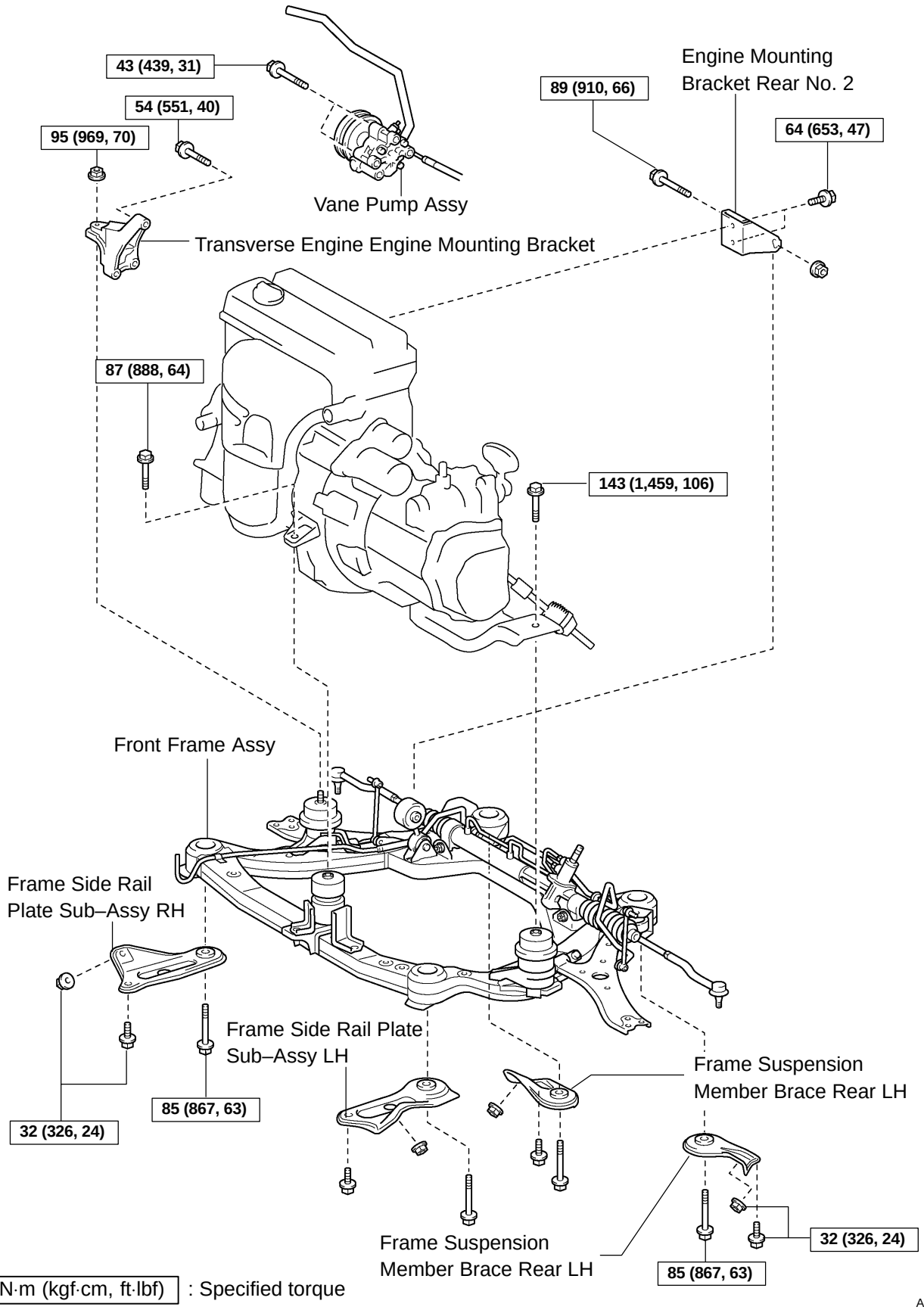
43 (439, 31)
54 (551, 40)
95 (969, 70)
Vane Pump Assy
Transverse Engine Engine Mounting Bracket
89 (910, 66)
Engine Mounting
Bracket Rear No. 2
64 (653, 47)
87 (888, 64)
143 (1,459, 106)
Front Frame Assy
Frame Side Rail
Plate Sub–Assy RH
Frame Side Rail Plate
Sub–Assy LH
85 (867, 63)
32 (326, 24)
Frame Suspension
Member Brace Rear LH
Frame Suspension
Member Brace Rear LH
32 (326, 24)
85 (867, 63)
N·m (kgf·cm, ft·lbf) : Specified torque
A59886

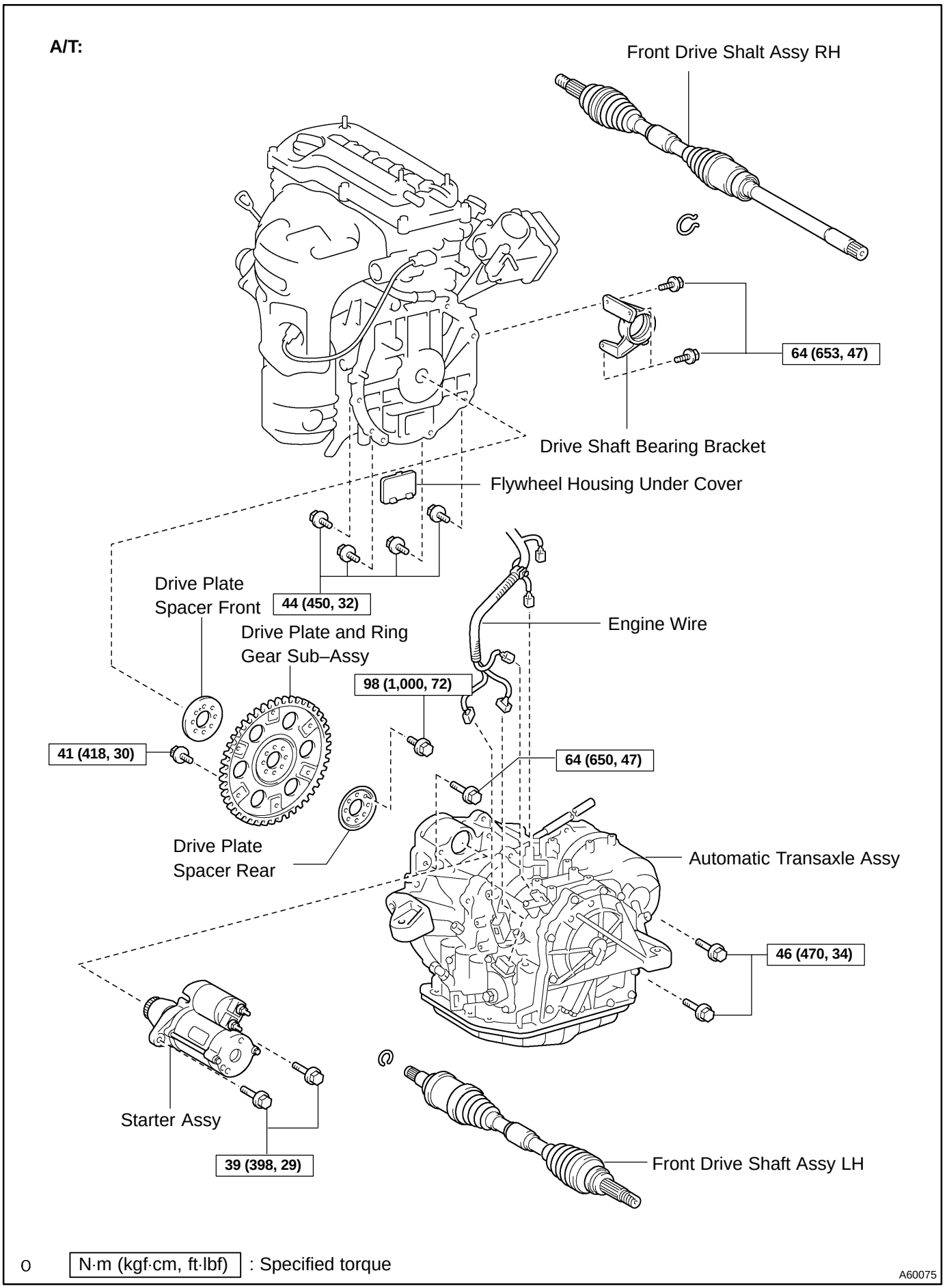
A/T:
Front Drive Shalt Assy RH
64 (653, 47)
Drive Shaft Bearing Bracket
Flywheel Housing Under Cover
44 (450, 32)
Drive Plate
Spacer Front
Drive Plate and Ring
Gear Sub–Assy
Engine Wire
98 (1,000, 72)
41 (418, 30)
64 (650, 47)
Drive Plate
Spacer Rear
Automatic Transaxle Assy
46 (470, 34)
Starter Assy
39 (398, 29)
Front Drive Shaft Assy LH
o N·m (kgf·cm, ft·lbf) : Specified torque
A60075

M/T:

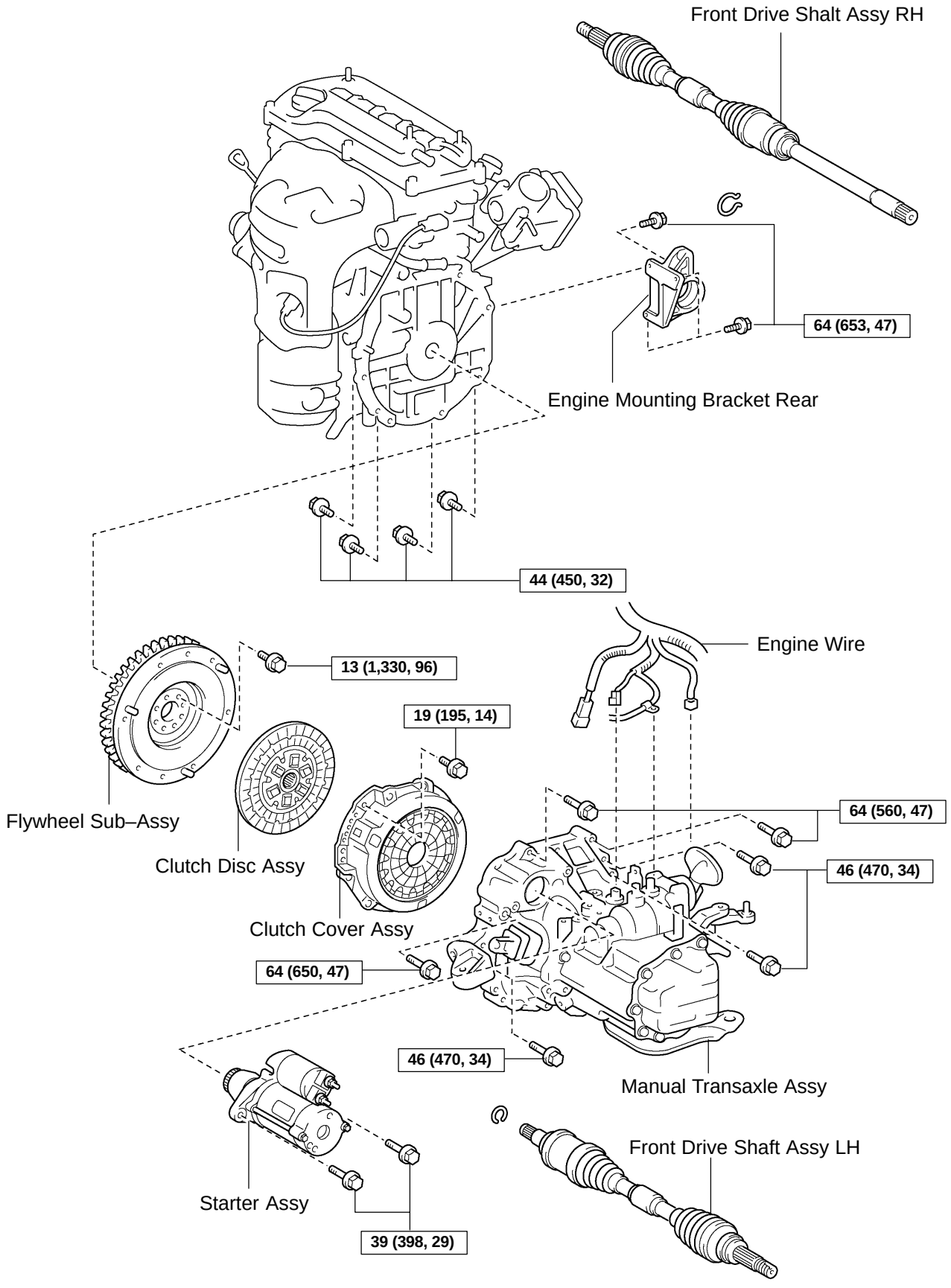

o N·m (kgf·cm, ft·lbf) : Specified torque

A60074

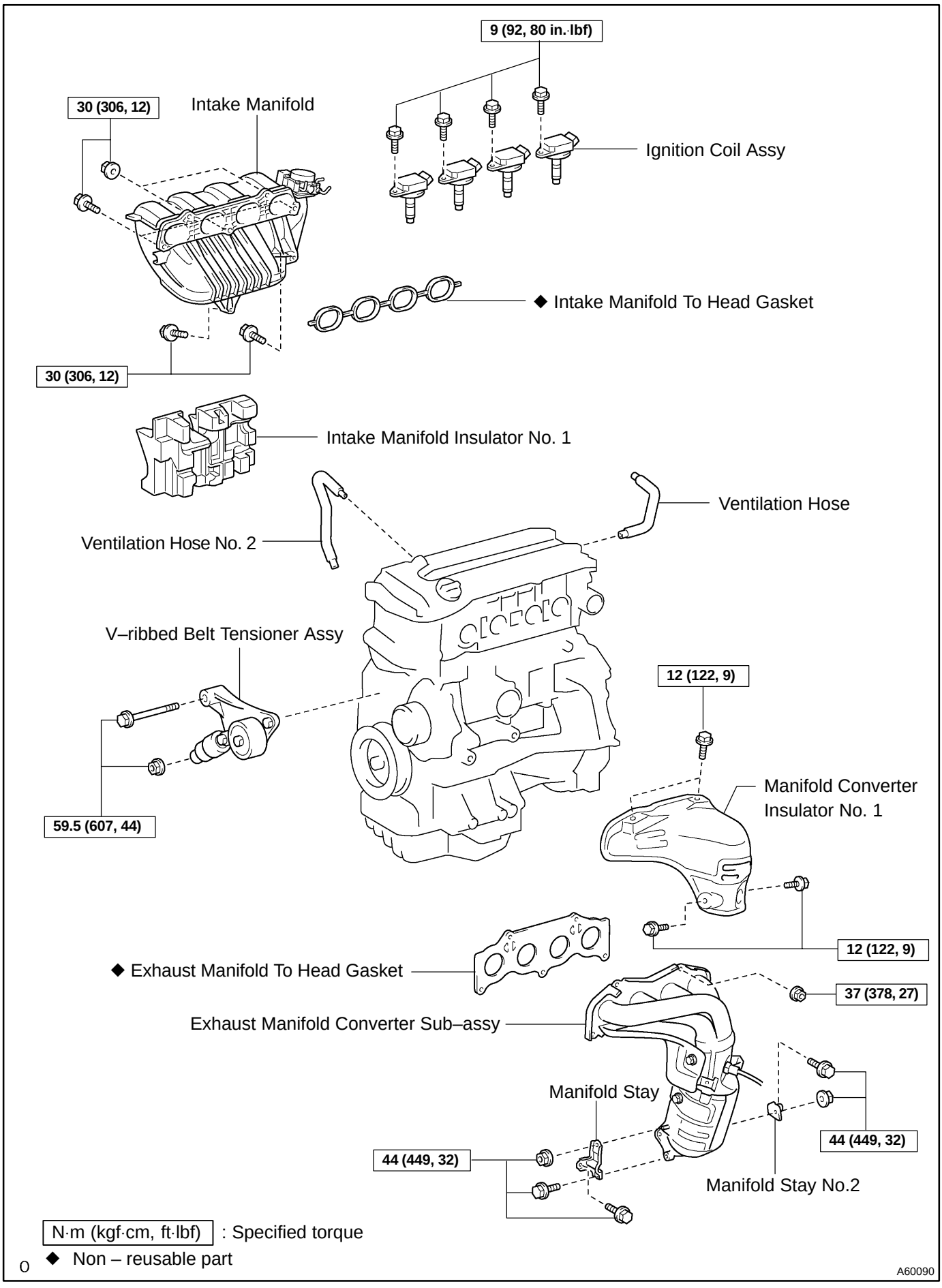
9 (92, 80 in.·lbf)
30 (306, 12)
Intake Manifold
Ignition Coil Assy
◆ Intake Manifold To Head Gasket
30 (306, 12)
Intake Manifold Insulator No. 1
Ventilation Hose
Ventilation Hose No. 2
V–ribbed Belt Tensioner Assy
12 (122, 9)
Manifold Converter Insulator No. 1
59.5 (607, 44)
12 (122, 9)
◆ Exhaust Manifold To Head Gasket
37 (378, 27)
Exhaust Manifold Converter Sub–assy
Manifold Stay
44 (449, 32)
44 (449, 32)
Manifold Stay No.2
N·m (kgf·cm, ft·lbf) : Specified torque
◆ Non – reusable part
A60090

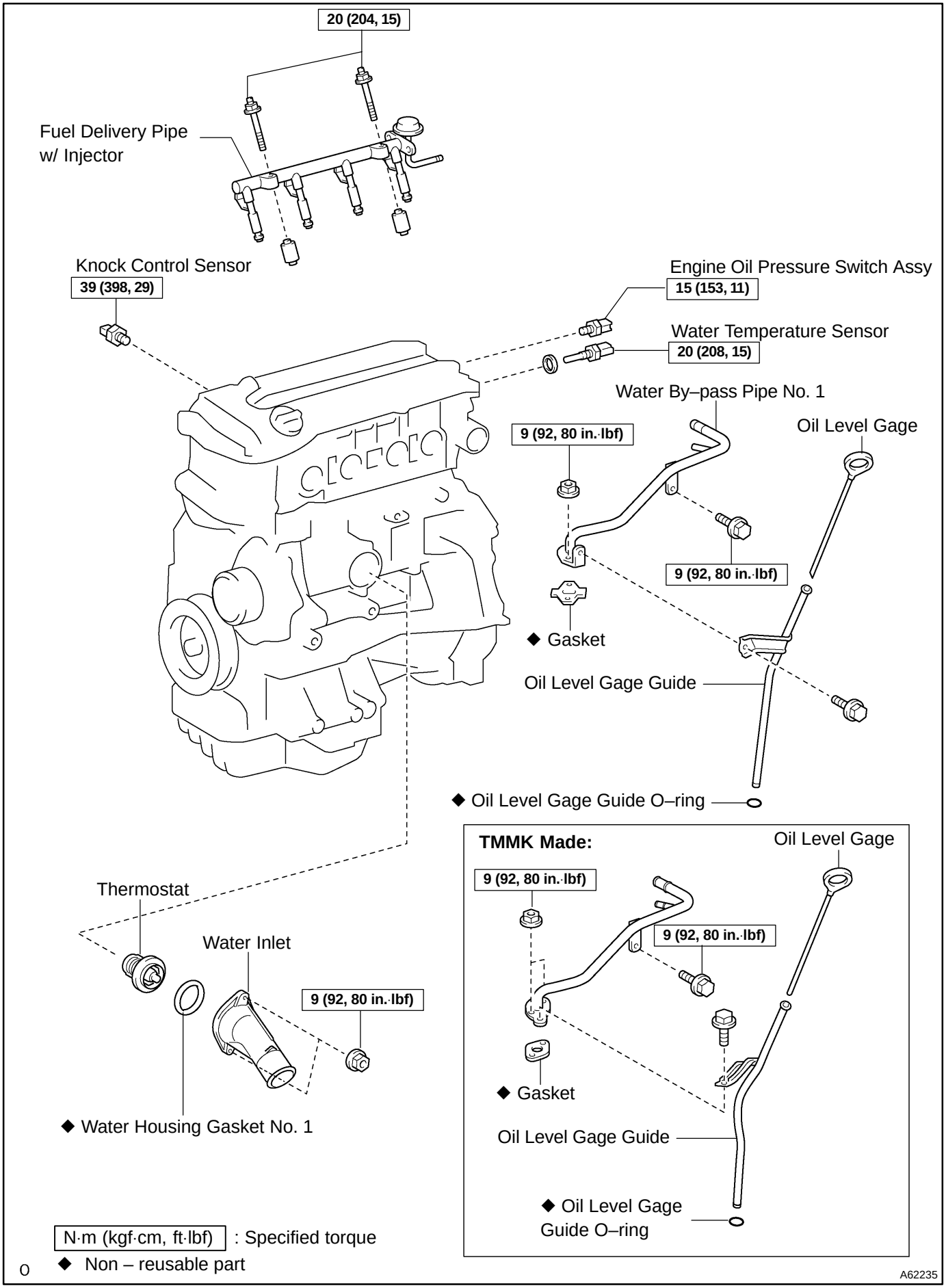
20 (204, 15)
Fuel Delivery Pipe w/ Injector
Knock Control Sensor
39 (398, 29)
Engine Oil Pressure Switch Assy
15 (153, 11)
Water Temperature Sensor
20 (208, 15)
Water By–pass Pipe No. 1
Oil Level Gage
9 (92, 80 in.·lbf)
9 (92, 80 in.·lbf)
◆ Gasket
Oil Level Gage Guide
◆ Oil Level Gage Guide O–ring
TMMK Made:
Oil Level Gage
9 (92, 80 in.·lbf)
9 (92, 80 in.·lbf)
◆ Gasket
Oil Level Gage Guide
◆ Oil Level Gage Guide O–ring
Thermostat
Water Inlet
9 (92, 80 in.·lbf)
◆ Water Housing Gasket No. 1
N·m (kgf·cm, ft·lbf) : Specified torque
◆ Non – reusable part
A62235

CHAIN (2AZ–FE)

140HV–01

REPLACEMENT

1. REMOVE HOOD SUB–ASSY

2. REMOVE FRONT WHEEL RH

3. REMOVE ENGINE UNDER COVER LH

4. REMOVE ENGINE UNDER COVER RH

5. REMOVE FRONT FENDER APRON SEAL RH

6. DRAIN ENGINE OIL

(a) Install a new gasket and the drain plug after draining engine oil.
Torque: 25 N·m (255 kgf·cm, 18 ft·lbf)

7. REMOVE EXHAUST PIPE ASSY FRONT

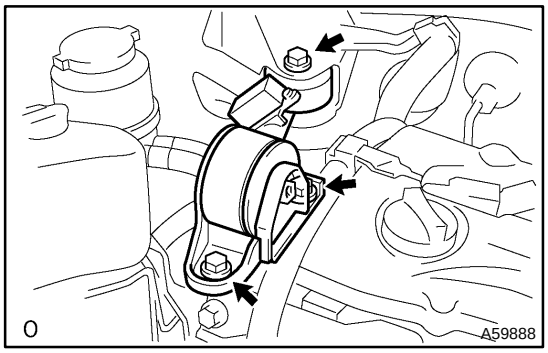

8. REMOVE ENGINE MOVING CONTROL ROD W/BRACKET

(a) Remove the 3 bolts and engine moving control rod w/ bracket.

9. REMOVE ENGINE MOUNTING STAY NO.2 RH

10. REMOVE ENGINE MOUNTING BRACKET NO.2 RH

11. REMOVE FAN AND GENERATOR V BELT
(See page 14–5)

12. REMOVE ENGINE COVER SUB–ASSY NO.1

13. DISCONNECT ENGINE WIRE

14. REMOVE GENERATOR ASSY

15. REMOVE VANE PUMP ASSY
(See page 51–8)

NOTICE:
Do not disconnect the hose.

16. REMOVE IGNITION COIL ASSY

17. DISCONNECT VENTILATION HOSE

18. DISCONNECT VENTILATION HOSE NO.2

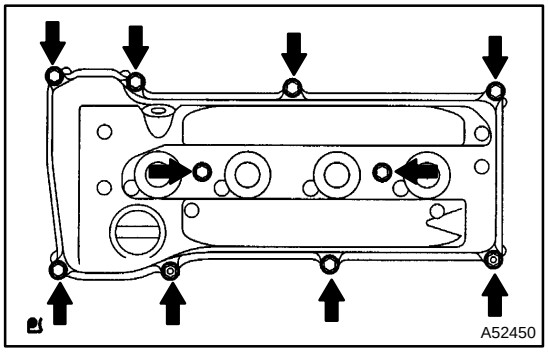

19. REMOVE CYLINDER HEAD COVER SUB–ASSY

(a) Remove the bolt and disconnect the engine wire harness clamp.

(b) Remove the 8 bolts and 2 nuts, and disconnect the cylinder head cover.

20. SET NO.1 CYLINDER TO TDC/COMPRESSION (See page 14–7)

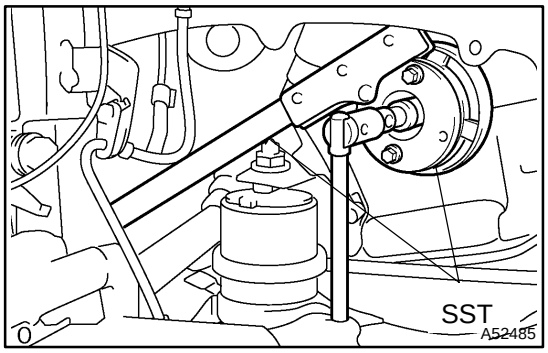

21. REMOVE CRANKSHAFT PULLEY

(a) Remove the crankshaft pulley (TMC made).

(1) Using SST, loosen the pulley bolt.

SST 09213–54015 (91651–60855), 09330–00021

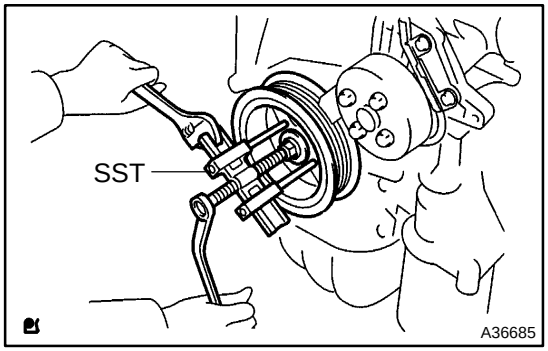

(2) Using SST, remove the crankshaft pulley.

SST 09950–50013 (09951–05010, 09952–05010, 09953–05020, 09954–05021)

(b) Remove the crankshaft pulley (TMMK made).

(1) Using SST, loosen the pulley bolt.

SST 09960–10010 (09962–01000, 09963–01000)

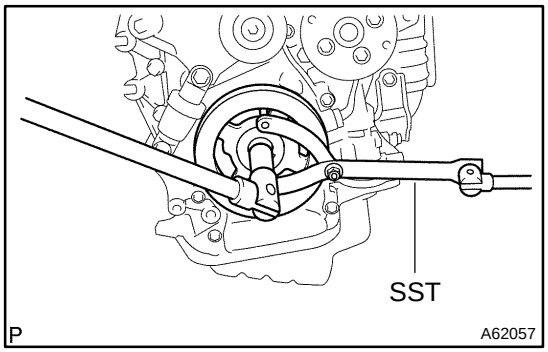

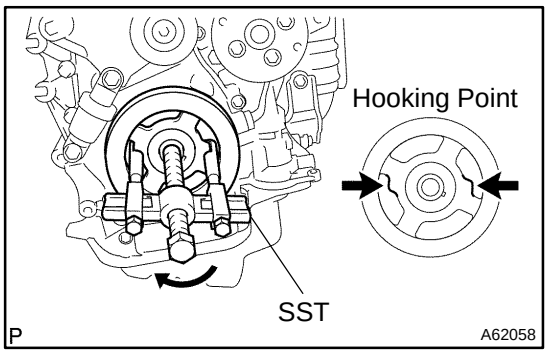

(2) Using SST, remove the crankshaft pulley.
SST 09950–40011 (09951–04010, 09952–04010, 09953–04030, 09954–04010, 09955–04041, 09957–04010, 91111–51014)

22. REMOVE CRANK POSITION SENSOR

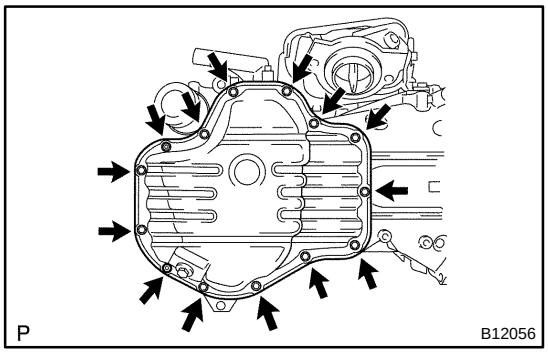

23. REMOVE OIL PAN SUB–ASSY

(a) Remove the 12 bolts and 2 nuts.

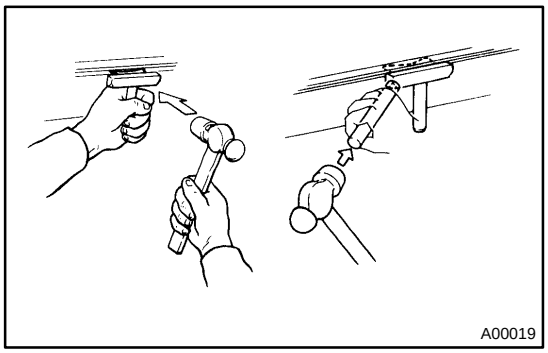

(b) Insert the blade of SST between the crank case and oil pan, cut off applied sealer and remove the oil pan.
SST 09032–00100

NOTICE:
Be careful not to damage the contact surface of the cylinder block and oil pan.

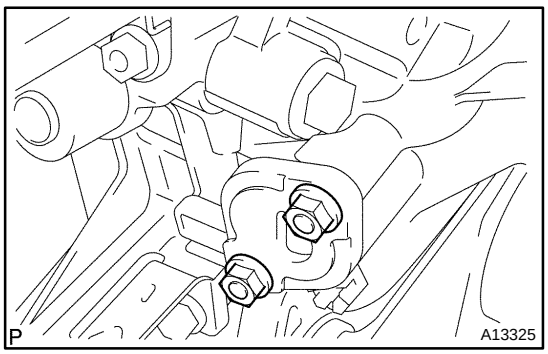

24. REMOVE CHAIN TENSIONER ASSY NO.1

(a) Remove the 2 nuts, timing chain tensioner and gasket.

NOTICE:
Be sure not to revolve the crankshaft without the chain tensioner.

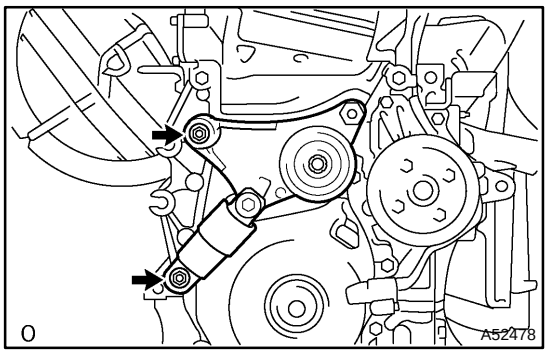

25. REMOVE V–RIBBED BELT TENSIONER ASSY

(a) Remove the bolt, the bolt and drive belt tensioner.

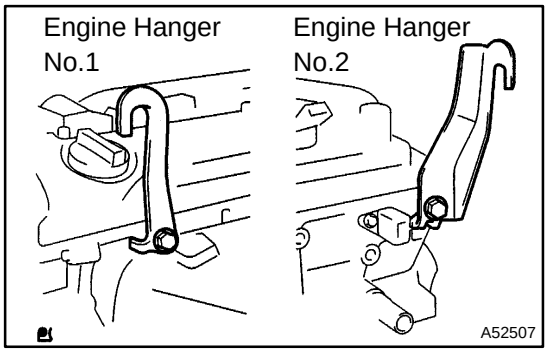

26. INSTALL ENGINE HANGER NO.1

(a) Install the engine hanger No.1, No.2 and bolt as shown in the illustration.
Torque: 38 N·m (387 kgf·cm, 30 ft·lbf)
Parts No.:
Engine hanger No. 1 12281–28010
Engine hanger No. 2 12282–28010
Bolt 91512–61020

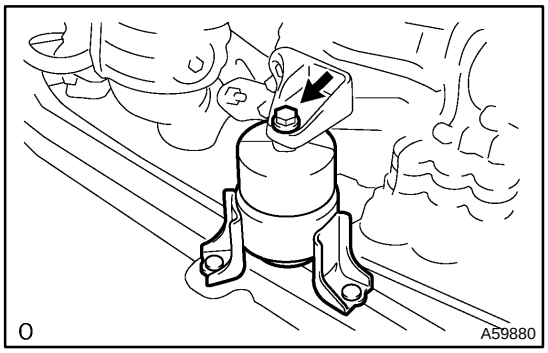

27. REMOVE TRANSVERSE ENGINE ENGINE MOUNTING INSULATOR

(a) Attach the engine chain hoist to the engine hangers.

CAUTION:
Do not attempt to hang the engine by hooking the chain to any other part.

(b) Remove the bolt, and disconnect the engine mounting insulator.

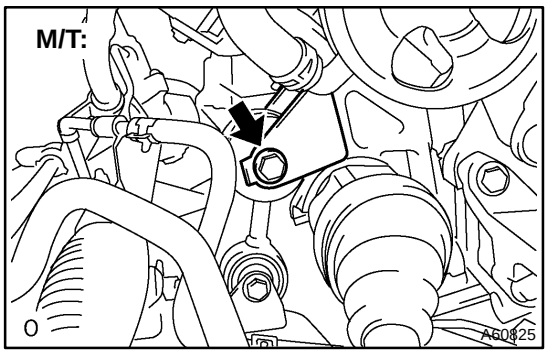

(c) Remove the bolt and disconnect the engine lateral control rod (M/T).

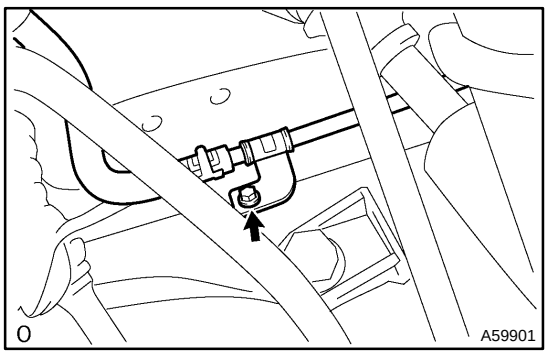

(d) Remove the bolt and disconnect the steering gear return hose cramp from the frame.

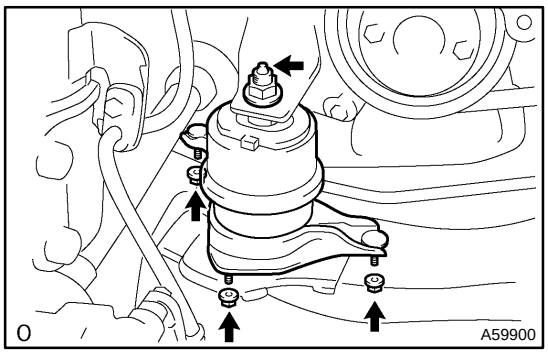

(e) Remove the 4 nuts from the engine mounting insulator RH.
(f) Raise the engine and remove the engine mounting insulator RH.

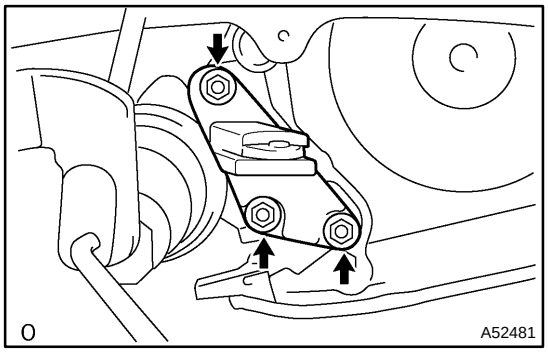

28. REMOVE TRANSVERSE ENGINE ENGINE MOUNTING BRACKET

(a) Remove the 3 bolts and the engine mounting bracket RH.

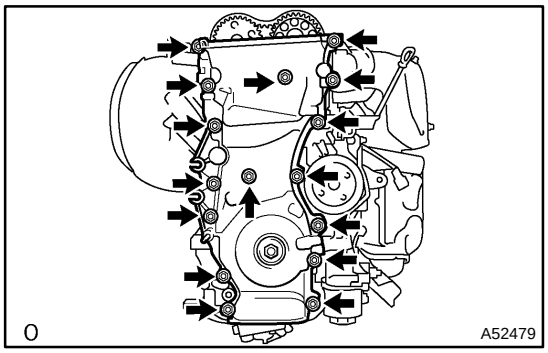

29. REMOVE TIMING CHAIN OR BELT COVER SUB–ASSY

(a) Remove the stud bolt for drive belt tensioner from the cylinder block.
(b) Remove the 14 bolts and 2 nuts.
(c) Remove the timing chain cover with a screwdriver.

NOTICE:
Be careful not to damage the contact surfaces of timing chain cover, cylinder block and cylinder head.

30. REMOVE CRANKSHAFT POSITION SENSOR PLATE NO.1

31. REMOVE CHAIN TENSIONER SLIPPER

32. REMOVE CHAIN VIBRATION DAMPER NO.1

33. REMOVE CHAIN SUB–ASSY

34. REMOVE CRANKSHAFT TIMING GEAR OR SPROCKET

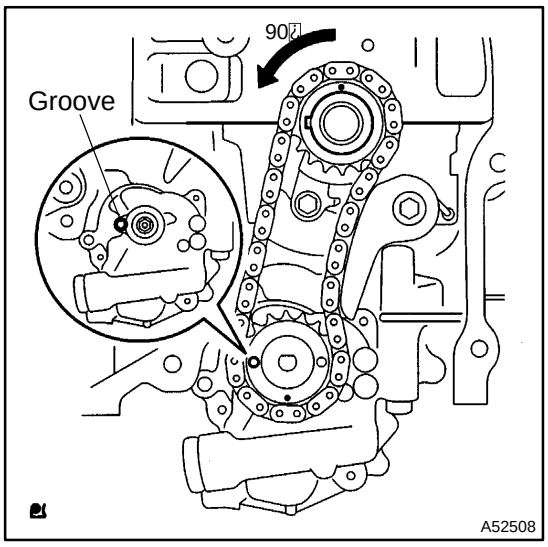

35. REMOVE NO.2 CHAIN SUB–ASSY

(a) Turn the crankshaft counterclockwise 90°, and align an adjusting hole of the oil pump drive shaft gear with the groove of the oil pump.

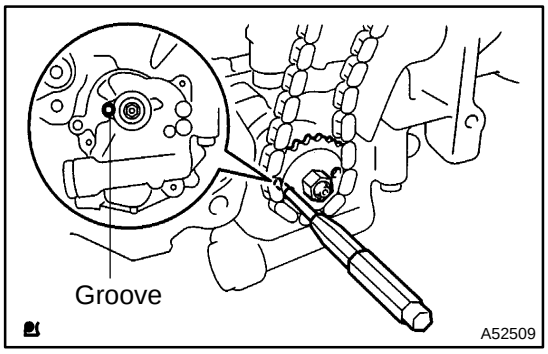

(b) Put a bar (ϕ4mm) in the adjusting hole of the oil pump drive shaft gear to lock in position, and remove a nut.

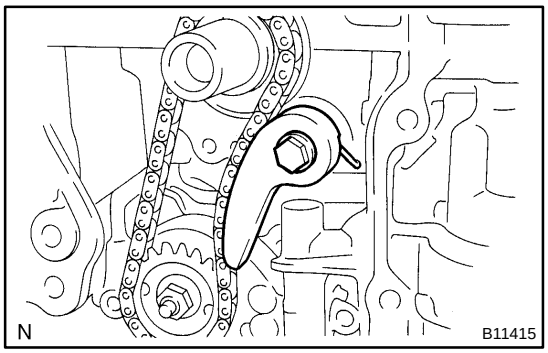

(c) Remove the bolt, chain tensioner plate and spring.
(d) Remove the chain tensioner, oil pump drive shaft gear and No.2 chain.

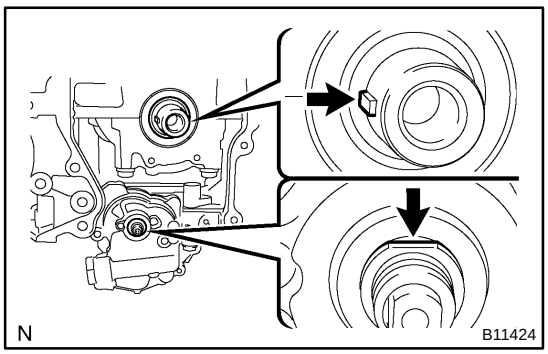

36. INSTALL NO.2 CHAIN SUB–ASSY

(a) Set the crankshaft key into the left horizontal position.
(b) Turn the cutout of the drive shaft to the top.

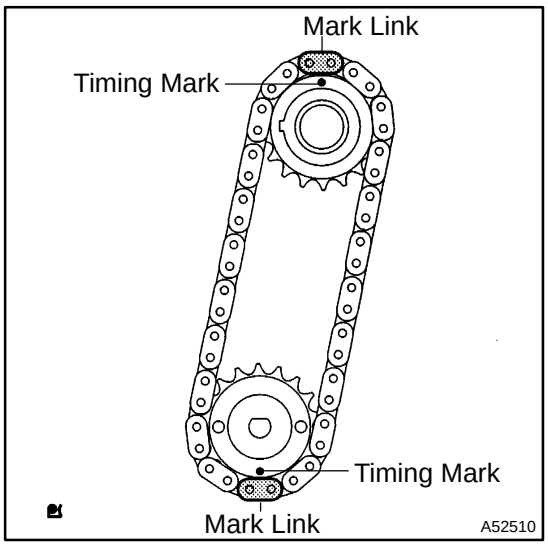

(c) Align the mark links (yellow colored links) with the timing marks of the gear as shown in the illustration.

(d) Insert the gears with chain to the crankshaft and oil pump shaft.

(e) Temporarily tighten the oil pump drive shaft gear by a nut.

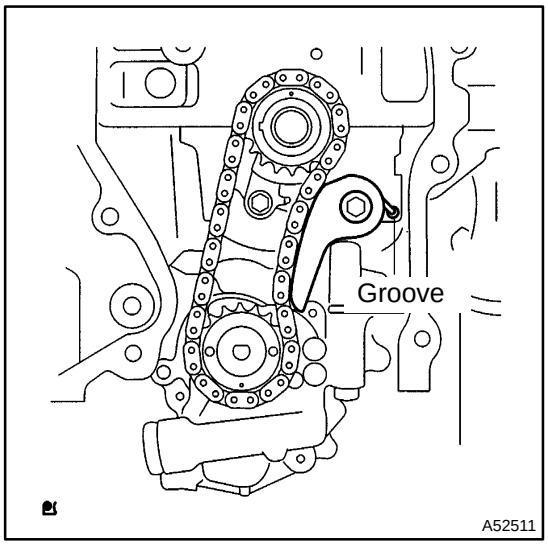

(f) Inset the damper spring into the adjusting hole, and install the chain tensioner plate by a nut.
Torque: 12 N·m (122 kgf·cm, 9 ft·lbf)

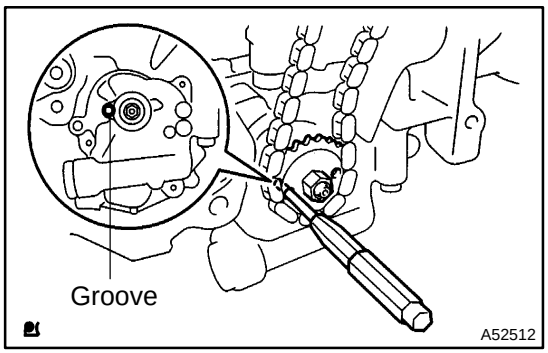

(g) Align an adjusting hole of the oil pump drive shaft gear with the groove of the oil pump.

(h) Put a bar (ϕ4mm) in the adjusting hole of the oil pump drive shaft gear to lock in position, and assemble a nut.
Torque: 30 N·m (301 kgf·cm, 22 ft·lbf)

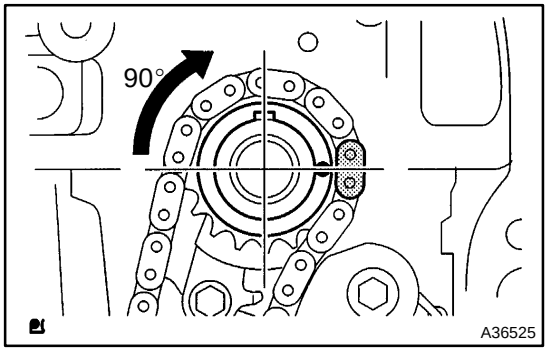

(i) Rotate the crankshaft counterclockwise 90°, and align the crankshaft key to the top.

37. INSTALL CHAIN VIBRATION DAMPER NO.1

Torque: 9.0 N·m (92 kgf·cm, 80 in.·lbf)

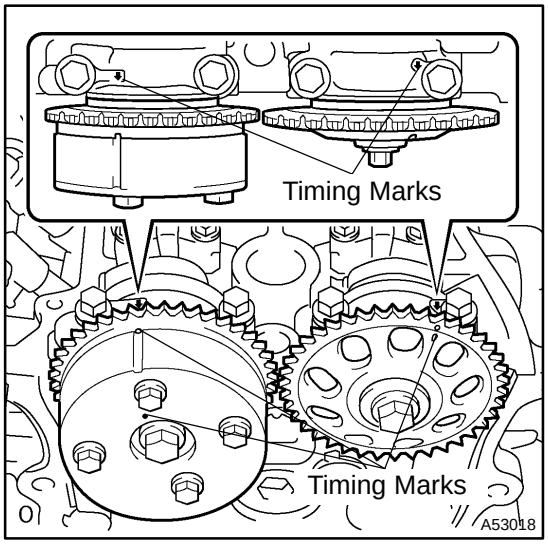

38. INSTALL CHAIN SUB–ASSY

(a) Set No.1 cylinder to TDC/compression.
(1) Align the timing marks of the camshaft timing sprockets with No.1 bearing caps.

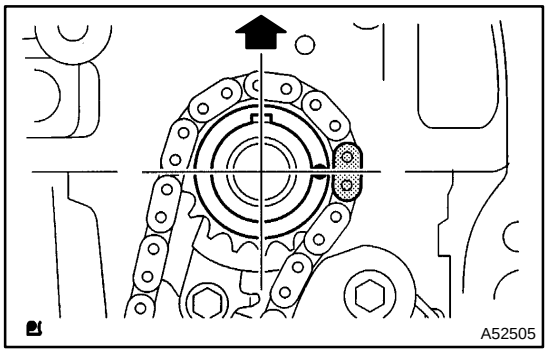

(2) Using the crankshaft pulley bolt, turn the crankshaft and set the set key on the crankshaft upward.

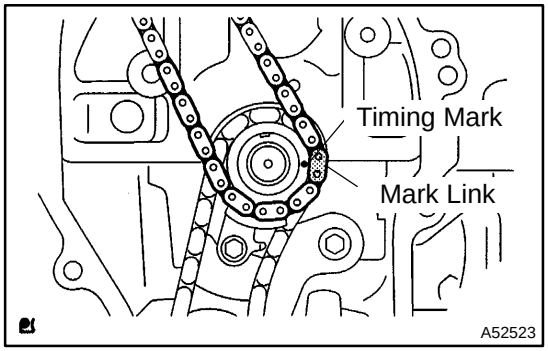

(b) Align the mark link (gold or orange colored link) with the timing mark of the crankshaft timing gear.

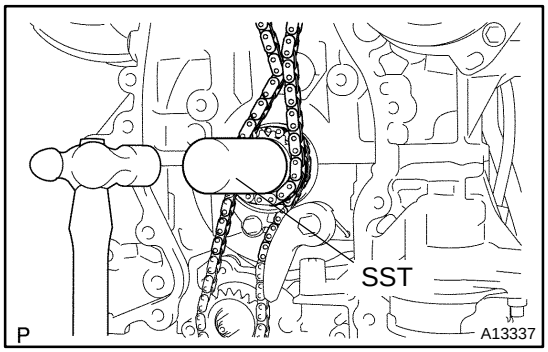

(c) Using a SST, install the sprocket.
SST 09309–37010

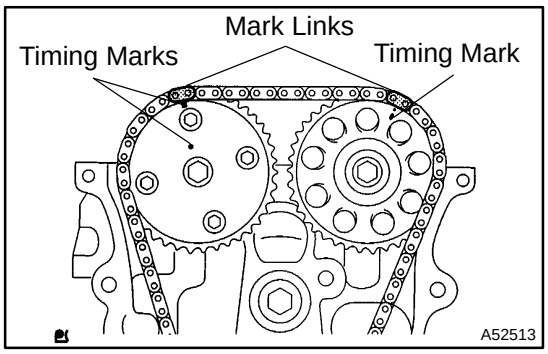

(d) Align the mark links (gold or yellow colored links) with the timing marks of the camshaft timing gear, and install the chain.

39. INSTALL CHAIN TENSIONER SLIPPER

Torque: 19 N·m (194 kgf·cm, 14 ft·lbf)

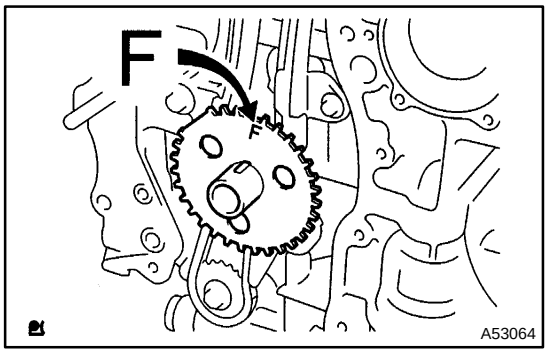

40. INSTALL CRANKSHAFT POSITION SENSOR PLATE NO.1

(a) Install the crankshaft position sensor plate the ”F” mark facing forward.

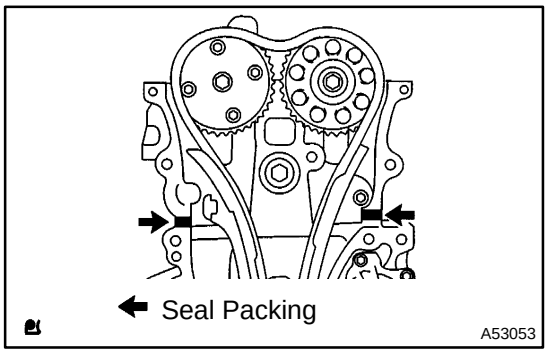

41. INSTALL TIMING CHAIN OR BELT COVER SUB–ASSY

NOTICE:

- **Remove any oil from the contact surface.**
- **Install the chain cover within 3 minutes after applying seal packing.**
- **Do not start the engine 2 hours after installing.**

(a) Remove any old packing (FIPG) material and be careful not to drop any oil on the contact surfaces of the timing chain cover, cylinder head and cylinder block.

(b) Apply seal packing in the shape of bead (Diameter 2 mm (0.099 in.)) as shown in the illustration.
Seal packing: Part No. 08826–00080 or equivalent

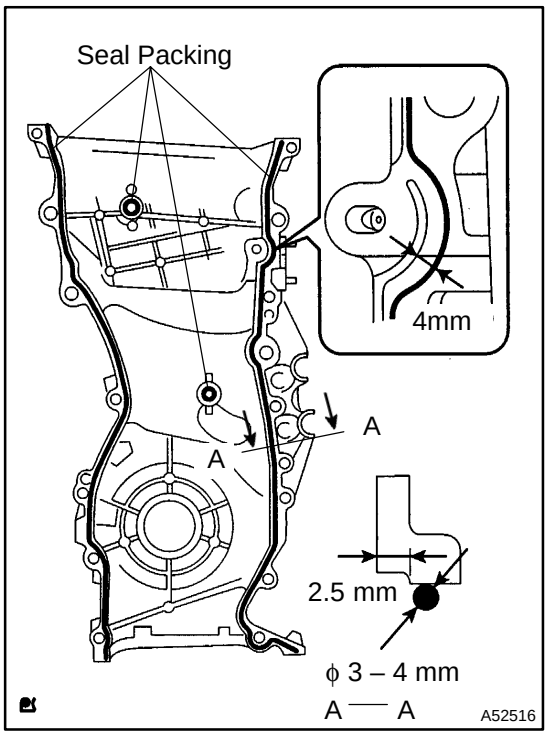

(c) Apply seal packing in the shape of bead (Diameter 3 – 4 mm (0.118–0.157 in.)) as shown in the illustration .
Seal packing: Part No. 08826–00080 or equivalent

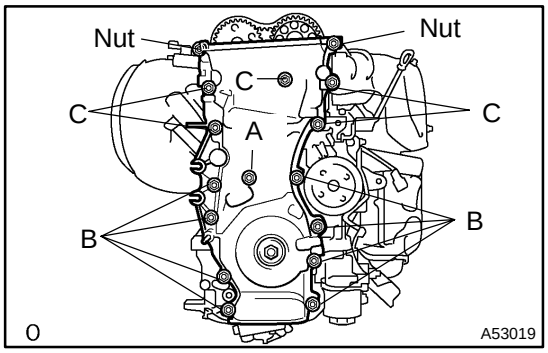

(d) Install the timing chain cover with the 14 bolts and 2 nuts.
Torque:
Bolt A 9.0 N·m (92 kgf·cm, 80 in.·lbf)
Bolt B 21 N·m (214 kgf·cm, 15 ft·lbf)
Bolt C 43 N·m (438 kgf·cm, 32 ft·lbf)
Nut 9.0 N·m (92 kgf·cm, 80 in.·lbf)

(e) Install the stud bolt to the drive belt tensioner.
Torque: 10 N·m (102 kgf·cm, 7 ft·lbf)

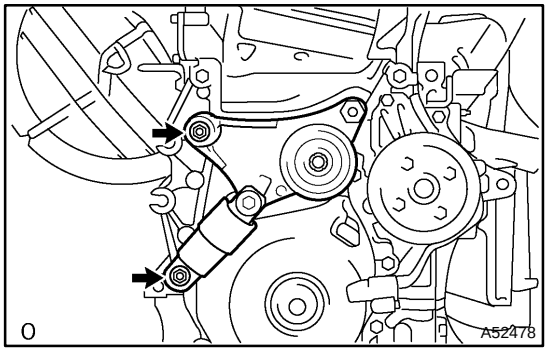

42. INSTALL V–RIBBED BELT TENSIONER ASSY

(a) Install the drive belt tensioner with the bolt and nut.
Torque: 59.5 N·m (607 kgf·cm, 44 ft·lbf)

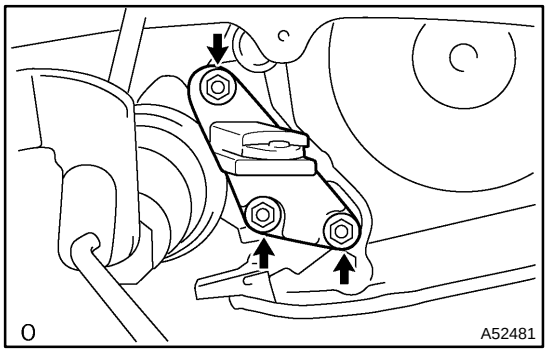

43. INSTALL TRANSVERSE ENGINE ENGINE MOUNTING BRACKET

(a) Install the engine mounting bracket RH with the 3 bolts.
Torque: 54 N·m (551 kgf·cm, 40 ft·lbf)

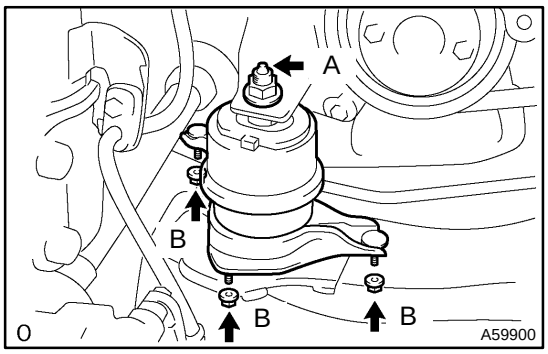

44. INSTALL TRANSVERSE ENGINE ENGINE MOUNTING INSULATOR

(a) Raise the engine and install the engine mounting insulator RH.

(b) Install the engine mounting insulator RH with the 4 nuts.
Torque:
Bolt A 95 N·m (969 kgf·cm, 70 ft·lbf)
Bolt B 87 N·m (888 kgf·cm, 64 ft·lbf)

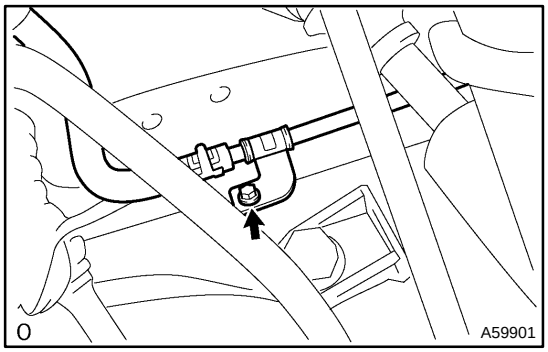

(c) Install the bolt and disconnect the steering gear return hose cramp from the frame.
Torque: 8.0 N·m (80 kgf·cm, 69 in.·lbf)

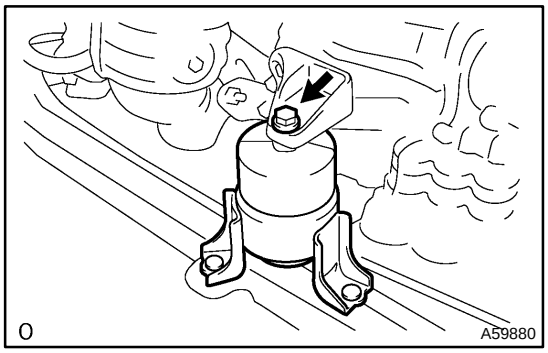

(d) Install the engine mounting insulator FR with the bolt.
Torque: 87 N·m (888 kgf·cm, 64 in.·lbf)

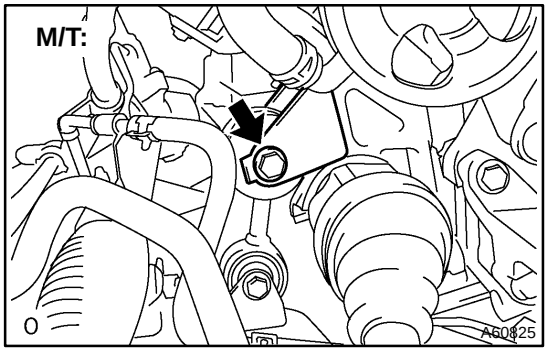

(e) Install the engine lateral control rod with the bolt (M/T).
Torque: 89 N·m (910 kgf·cm, 69 in.·lbf)

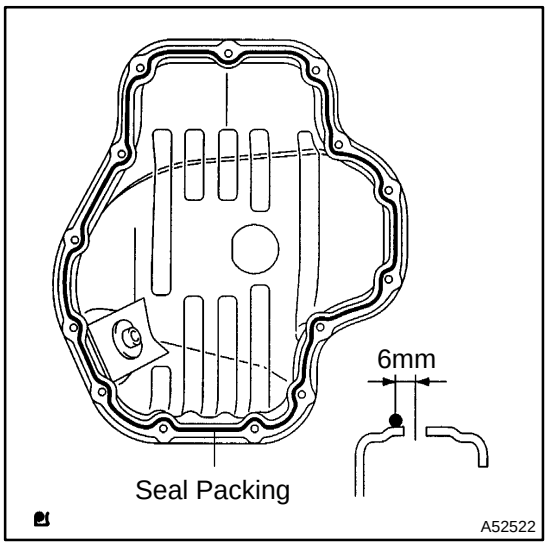

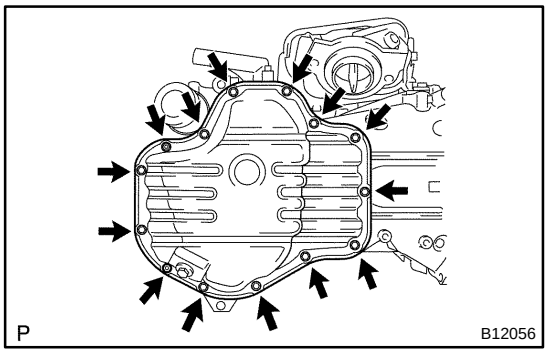

45. INSTALL OIL PAN SUB–ASSY

NOTICE:

- **Remove any oil from the contact surface.**
- **Install the oil pan within 3 minutes after applying seal packing.**
- **Do not start the engine 2 hours after installing.**

(a) Remove any old packing (FIPG) material and be careful not to drop any oil on the contact surface of the cylinder block and oil pan.

(b) Apply seal packing in the shape of bead (Diameter 3 – 4 mm (0.157 in.)) as shown in the illustration, and install the oil pan.
Seal packing:
Part No. 08826–00080 or equivalent

(c) Install the oil pan with the 12 bolts and 2 nuts.
Torque: 9.0 N·m (92 kgf·cm, 80 in.·lbf)

46. INSTALL CHAIN TENSIONER ASSY NO.1
(See page 14–88)

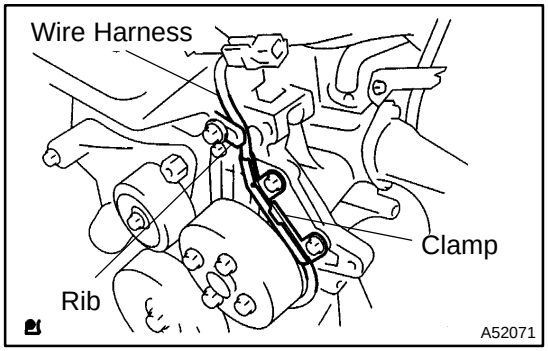

47. INSTALL CRANK POSITION SENSOR

(a) Install the bolt and crankshaft position sensor.
Torque: 9.0 N·m (92 kgf·cm, 80 in.·lbf)

(b) Confirm the wire harness of the crank position sensor is placed as shown in the illustration.

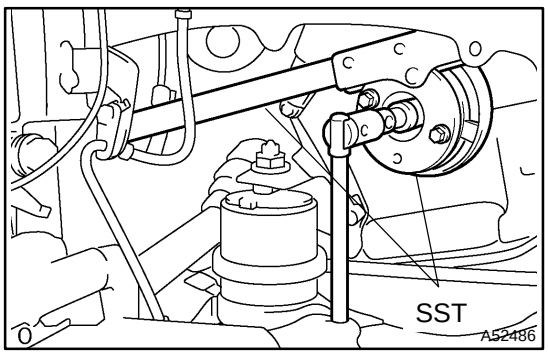

48. INSTALL CRANKSHAFT PULLEY

(a) Install the crankshaft pulley (TMC made).
(1) Align the pulley set key with the key groove of the pulley, and side on the pulley.
SST 09213–54015 (91651–60855), 09330–00021
(2) Using SST, install the pulley bolt.
Torque: 170 N·m (1,733 kgf·cm, 125 ft lbf)

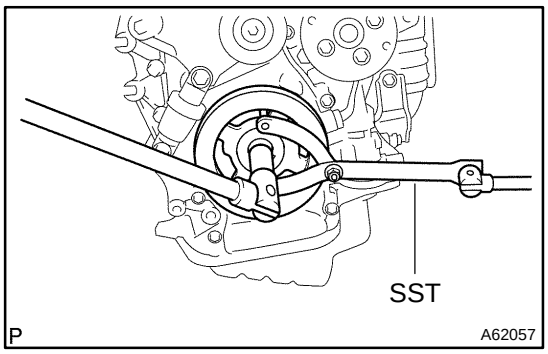

(b) Install the crankshaft pulley (TMMK made).
(1) Align the pulley set key with the key groove of the pulley, and side on the pulley.
SST 09960–10010 (09962–01000, 09963–01000)
(2) Using SST, install the pulley bolt.
Torque: 170 N·m (1,733 kgf·cm, 125 ft lbf)

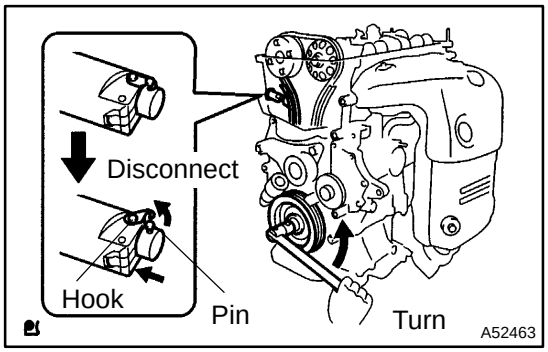

(c) Turn the crankshaft counterclockwise, and disconnect the plunger knock pin from the hook.

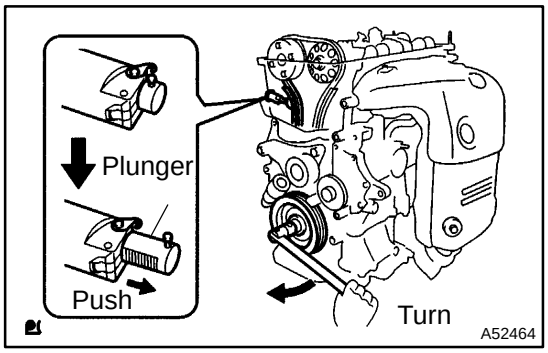

(d) Turn the crankshaft clockwise, and check that the slipper is pushed by the plunger.

49. INSTALL CYLINDER HEAD COVER SUB–ASSY
(See page 14–88)
50. INSTALL IGNITION COIL ASSY

Torque: 9.0 N·m (92 kgf·cm, 80 in.·lbf)
51. INSTALL VANE PUMP ASSY
(See page 51–8)
52. INSTALL GENERATOR ASSY
(See page 19–13)
53. INSTALL ENGINE WIRE

54. INSTALL FAN AND GENERATOR V BELT
(See page 14–5)
55. INSTALL ENGINE MOUNTING BRACKET NO.2 RH

Torque: 52 N·m (531 kgf·cm, 38 ft·lbf)
56. INSTALL ENGINE MOUNTING STAY NO.2 RH

Torque: 64 N·m (653 kgf·cm, 47 ft·lbf)

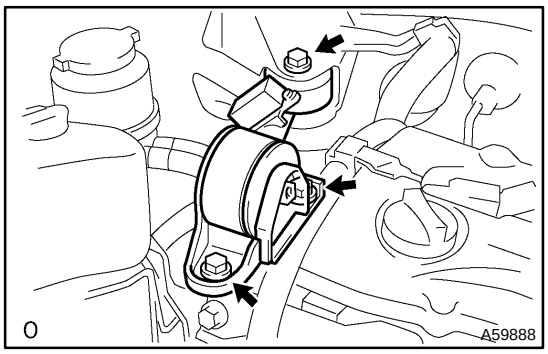

57. INSTALL ENGINE MOVING CONTROL ROD W/BRACKET

(a) Install the engine mounting control rod w/bracket with 3 bolts.

Torque: 64 N·m (653 kgf·cm, 47 ft·lbf)

58. INSTALL EXHAUST PIPE ASSY FRONT (See page 15–2)

59. INSTALL FRONT WHEEL RH

Torque: 103 N·m (1,050 kgf·cm, 76 ft·lbf)

60. INSTALL HOOD SUB–ASSY

Torque: 13 N·m (133 kgf·cm, 10 ft·lbf)

61. ADD ENGINE OIL

62. INSPECT OIL LEAK

CAMSHAFT (2AZ–FE)

1405Y–02

REPLACEMENT

1. REMOVE FRONT WHEEL RH
2. REMOVE FRONT FENDER APRON SEAL RH
3. REMOVE ENGINE COVER SUB–ASSY NO.1
4. REMOVE IGNITION COIL ASSY
5. DISCONNECT VENTILATION HOSE
6. DISCONNECT VENTILATION HOSE NO.2
7. DISCONNECT ENGINE WIRE

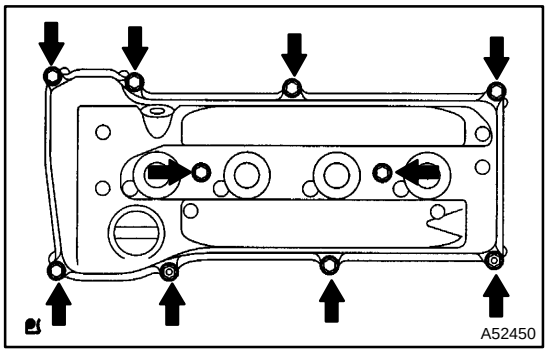

8. REMOVE CYLINDER HEAD COVER SUB–ASSY

(a) Remove the bolt and disconnect the engine wire harness clamp.
(b) Remove the bolts, 2 nuts, cylinder head cover and gasket.

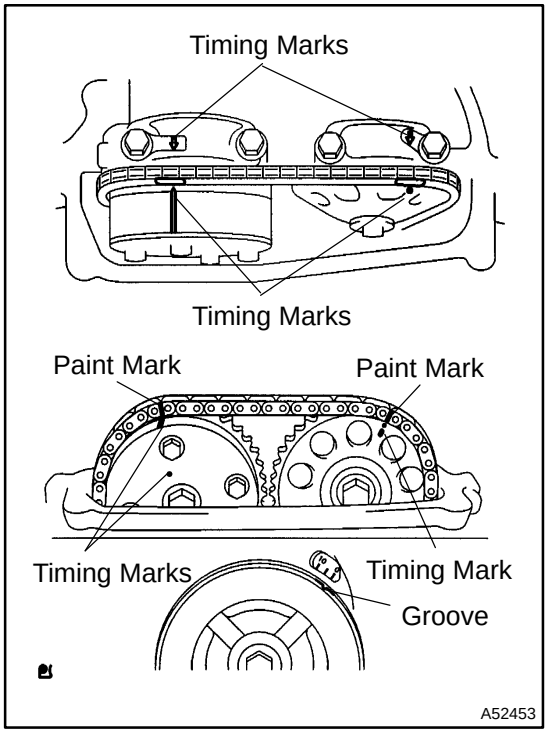

9. SET NO.1 CYLINDER TO TDC/COMPRESSION

(a) Turn the crankshaft pulley, and align its groove with the timing mark ”0” of the timing chain cover.
(b) Check that the timing marks of the camshaft timing sprockets are aligned with the timing marks of the bearing cap as shown in the illustration.
(c) Place match marks on the timing chain and camshaft timing sprocket.

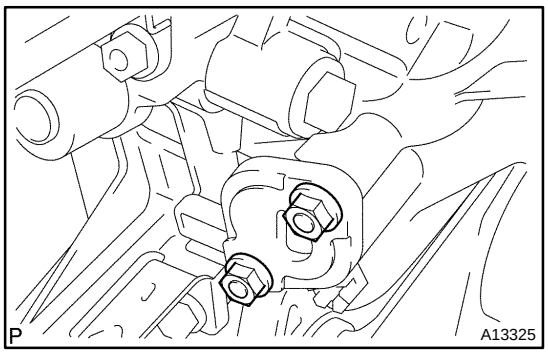

10. REMOVE CHAIN TENSIONER ASSY NO.1

(a) Remove the 2 nuts,timing chain tensioner and gasket.

NOTICE:

Be sure not to revolve the crankshaft without the chain tensioner.

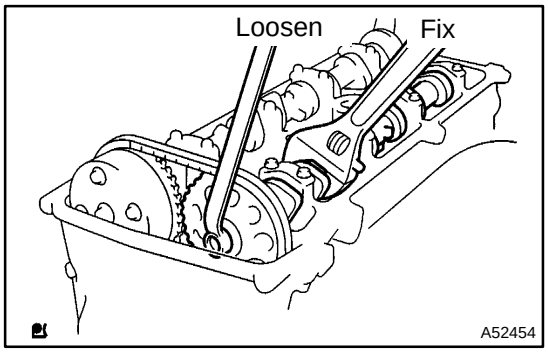

11. REMOVE NO.2 CAMSHAFT

(a) Fix the camshaft with a wrench and so on, then loosen the camshaft timing gear set blot.

NOTICE:

Be careful not to damage the valve lifter.

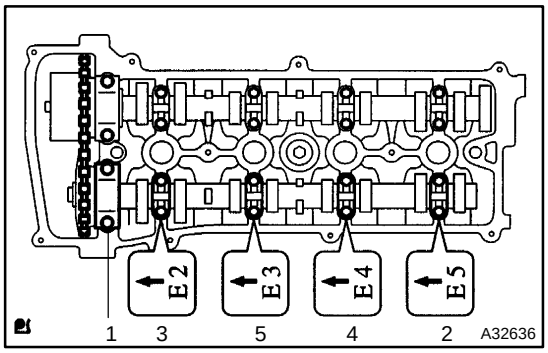

(b) Loosen the camshaft bearing cap bolts on No.2 camshaft in the sequence shown in the illustration in several passes, and remove the caps.

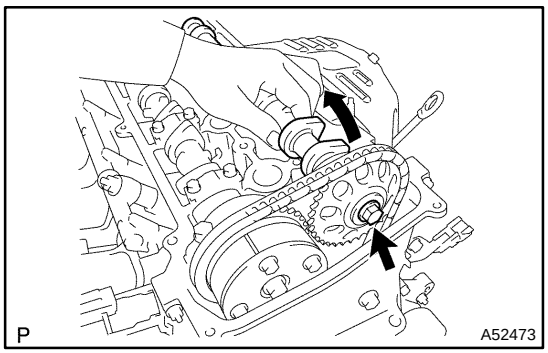

(c) Raising the camshaft, remove the set bolt.
(d) Remove the camshaft timing gear from the camshaft with timing chain.
(e) Remove the camshaft timing gear from the timing chain.

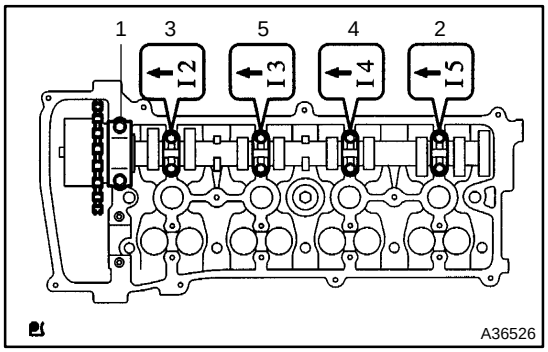

12. REMOVE CAMSHAFT

(a) Loosen the camshaft bearing cap bolts on camshaft in the sequence shown in the illustration in several passes, and remove the caps.
(b) Remove the intake camshaft.

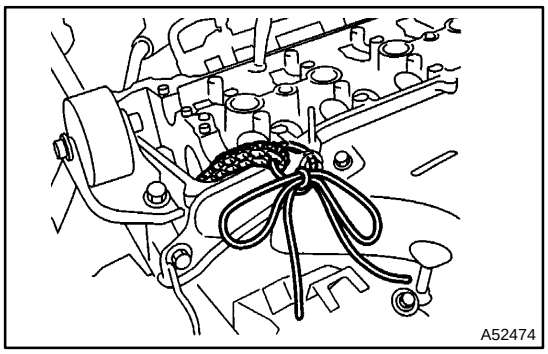

(c) Tie the timing chain with a string.

NOTICE:

Be careful not to drop anything inside the timing chain cover.

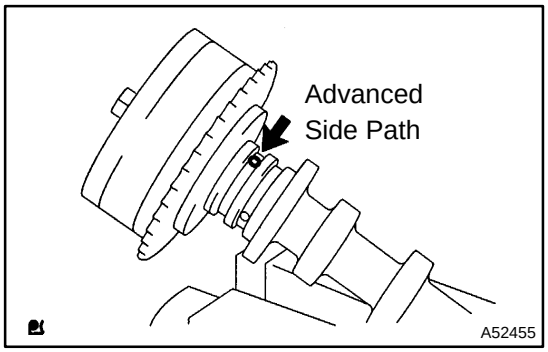

13. REMOVE CAMSHAFT TIMING GEAR ASSY

(a) Fix the No. 1 camshaft with a vise, and make sure the camshaft timing gear assembly does not rotate.

(b) Cover all the paths with vinyl tape except an advanced side path shown in the illustration.

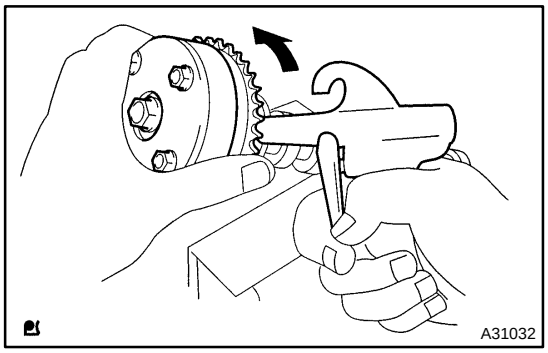

(c) Put air pressure into the oil path with 150 kpa (1.5 kgf/cm^2 21 psi), and turn the camshaft timing gear assembly to the advance direction (counterclockwise) by force.

CAUTION:

Cover the paths with shop rag to avoid oil splashing.

HINT:

Depending on the air pressure, the VVT timing sprocket will turn to the advance angle side without applying force by hand. Also, under the condition that the pressure can be hardly applied because of the air leakage from the port, there may be the case that the lock pin could be hardly released.

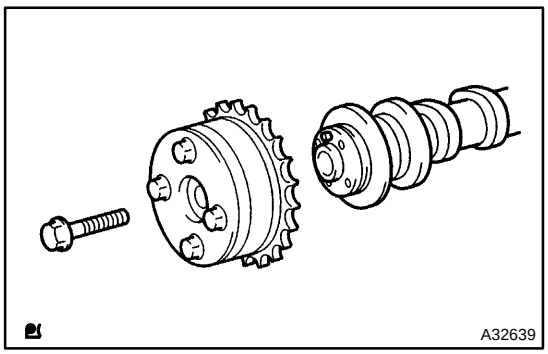

(d) Remove a fringe bolt of camshaft timing gear assembly.

NOTICE:

- **Be sure not to remove the other 4 bolts.**
- **In case of reusing the camshaft timing gear assembly, release the straight pin lock first, and then install the gear.**

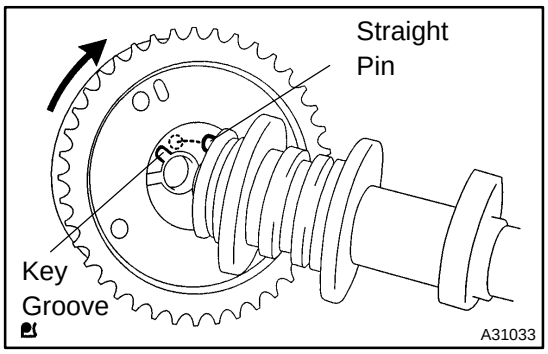

14. INSTALL CAMSHAFT TIMING GEAR ASSY

(a) Put the camshaft timing gear assembly and the a camshaft together with the straight pin off the key groove.

(b) Turn the camshaft timing gear assembly to the left direction (as shown in the illustration) with pushing it lightly against the camshaft. Push further at the position where the pin gets into the groove.

NOTICE:

Be sure not to turn the camshaft timing gear to the retard angle side (to the right direction).

(c) Check that there is no clearance between the gear's fringe and the camshaft.

(d) Tighten the fringe bolt with the camshaft timing gear fixed.
Torque: 54 N·m (551 kgf·cm, 40 ft·lbf)

(e) Check that the camshaft timing gear assembly can move to the retard angle side (to the right direction), and is locked at the most retarded position.

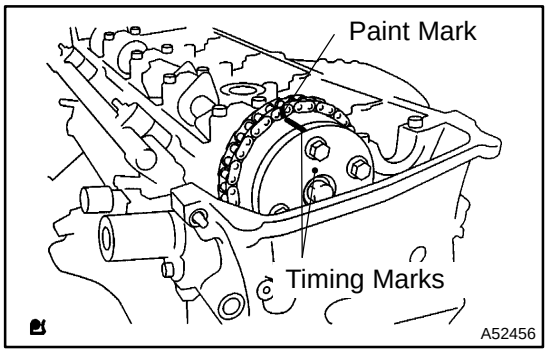

15. INSTALL CAMSHAFT

(a) Install the timing chain on the camshaft timing gear, with the painted links aligned with the timing marks on the camshaft timing sprockets.

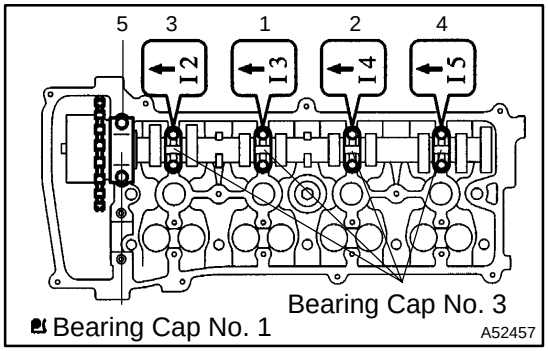

(b) Examine the front marks and numbers and tighten the bolts in the order shown in the illustration.
Torque:
Bearing cap No. 1 30 N·m (301 kgf·cm, 22 ft·lbf)
Bearing cap No. 3 9.0 N·m (92 kgf·cm, 80 in.·lbf)

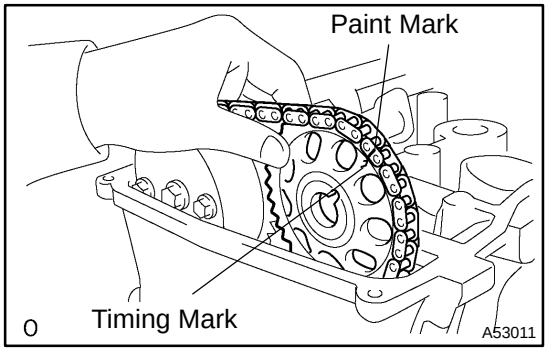

16. INSTALL NO.2 CAMSHAFT

(a) Put the camshaft No.2 on the cylinder head with the painted links of chain aligned with the timing mark on the camshaft timing sprockets.

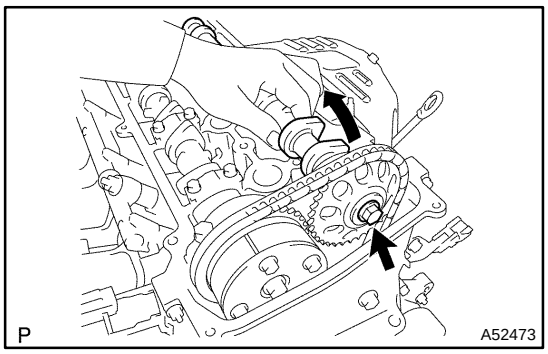

(b) Raising the camshaft, tighten the set bolt temporarily.

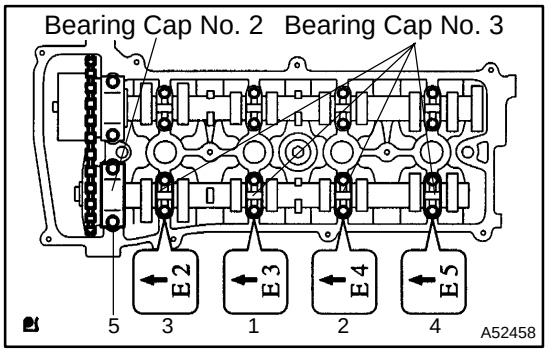

(c) Examine the from marks and numbers and tighten the bolts in the sequence shown in the illustration.
Torque:
Bearing cap No. 2 30 N·m (301 kgf·cm, 22 ft·lbf)
Bearing cap No. 3 9.0 N·m (92 kgf·cm, 80 in.·lbf)

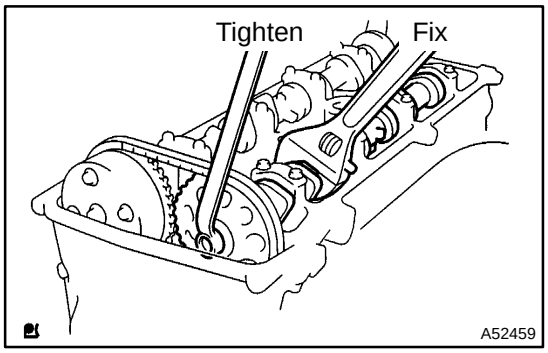

(d) Fix the camshaft with a spanner and so on, then tighten the camshaft timing gear set bolt.
Torque: 54 N·m (551 kgf·cm, 40 ft·lbf)

NOTICE:
Be careful not to damage the valve lifter.

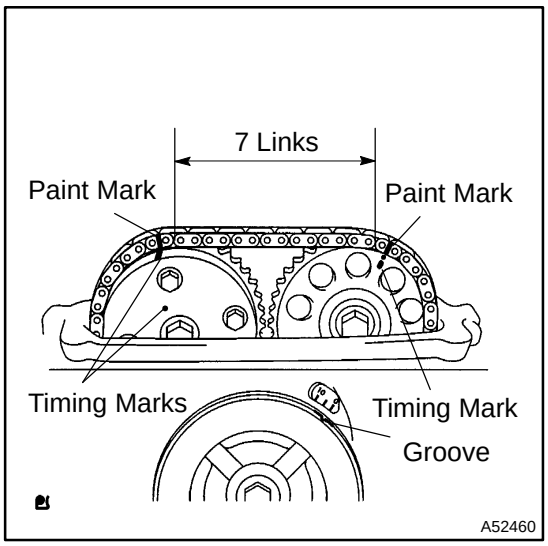

(e) As shown in the illustration, check the match marks on the timing chain and camshaft timing sprockets and the alignment of the pulley groove with timing mark of the chain cover.

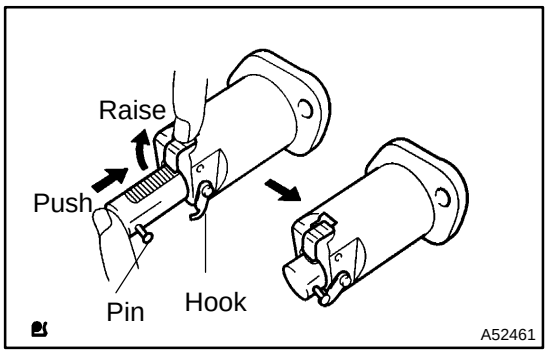

17. INSTALL CHAIN TENSIONER ASSY NO.1

(a) Release the ratchet pawl, fully push in the plunger and apply the hook to the pin so that the plunger cannot spring out.

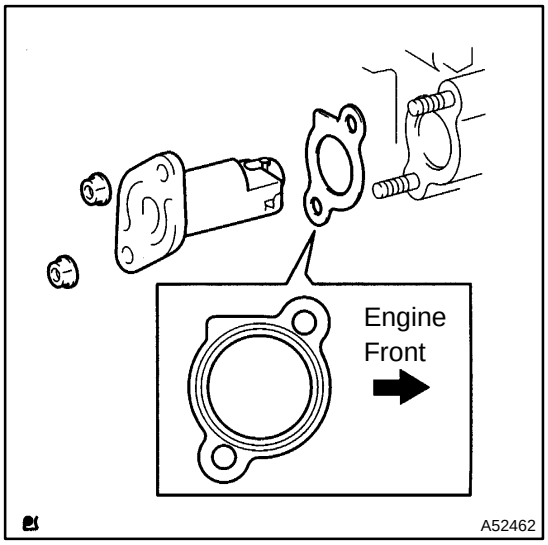

(b) Install a new gasket and chain tensioner with the 2 nuts.
Torque: 9.0 N·m (92 kgf·cm, 80 in.·lbf)

NOTICE:
When installing the tensioner, set the hook again if the hook releases the plunger.

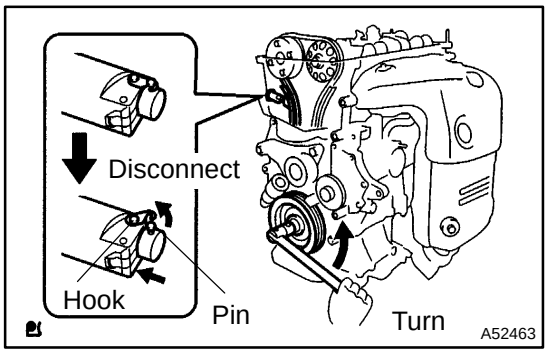

(c) Turn the crankshaft counterclockwise, and disconnect the plunger knock pin from the hook.

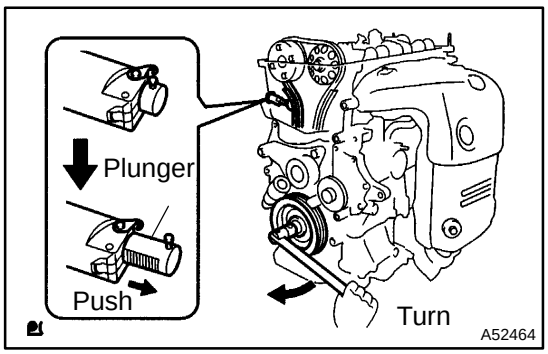

(d) Turn the crankshaft clockwise, and check that the slipper is pushed by the plunger.

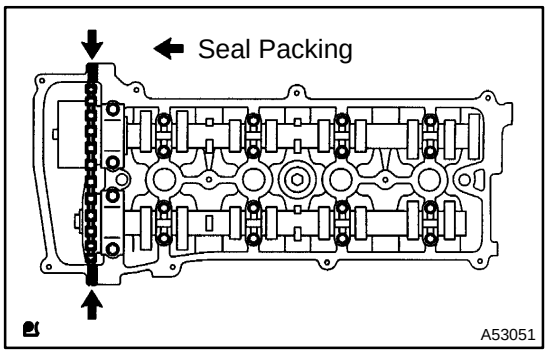

18. INSTALL CYLINDER HEAD COVER SUB–ASSY

(a) Remove any old packing (FIPG) material.
(b) Apply seal packing to 2 locations as shown in the illustration.
Seal packing: Part No. 08826–00080 or equivalent

NOTICE:
- **Remove any oil the contact surface.**
- **Install the cylinder head cover within 5 minutes after applying seal packing.**
- **Do not put into engine oil 2 hours after installing.**

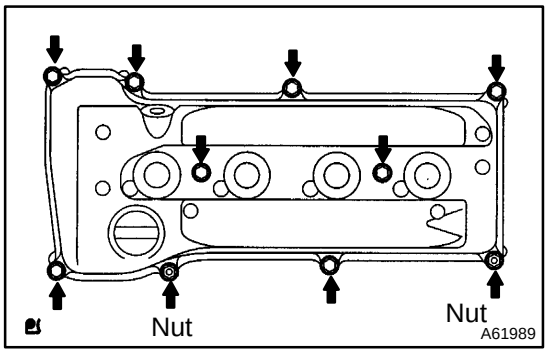

(c) Install the cylinder head cover with the 8 bolts and 2 nuts.
Torque: 11 N·m (110 kgf·cm, 8 ft·lbf)

19. CONNECT ENGINE WIRE

20. INSTALL IGNITION COIL ASSY

Torque: 9.0 N·m (92 kgf·cm, 80 in.·lbf)

21. INSTALL FRONT WHEEL RH
Torque: 103 N·m (1,050 kgf·cm, 76 ft·lbf)

22. INSPECT OIL LEAK

CYLINDER HEAD GASKET (2AZ–FE)

140HU–01

REPLACEMENT

1. **WORK FOR PREVENTING GASOLINE FROM SPILLING OUT (See page 11–1)**
2. **REMOVE FRONT SUSPENSION UPPER BRACE CENTER(W/ FRONT SUSPENSION BRACE UPPER CENTER)**
3. **REMOVE CHAIN SUB–ASSY (See page 14–74)**
4. **DRAIN COOLANT (See page 16–6)**
5. **DISCONNECT RADIATOR HOSE OUTLET**
6. **DISCONNECT UNION TO CONNECTOR TUBE HOSE**
7. **DISCONNECT HEATER INLET WATER HOSE**
8. **DISCONNECT FUEL TUBE SUB–ASSY (See page 11–1)**

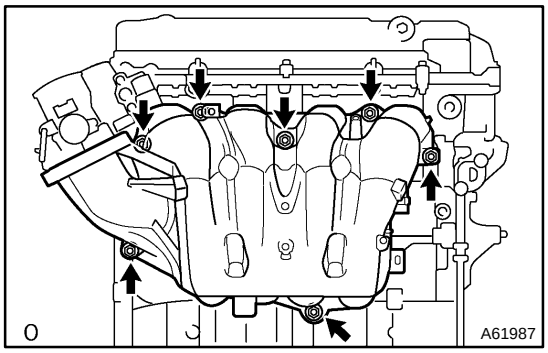

9. **REMOVE INTAKE MANIFOLD**

(a) Disconnect the 2 water by–pass hoses of the throttle body.
(b) Remove the 5 bolts, 2 nuts, intake manifold and gasket.

10. **DISCONNECT ENGINE WIRE**
11. **REMOVE INTAKE MANIFOLD INSULATOR NO.1**
12. **REMOVE EXHAUST MANIFOLD HEAT INSULATOR NO.1**

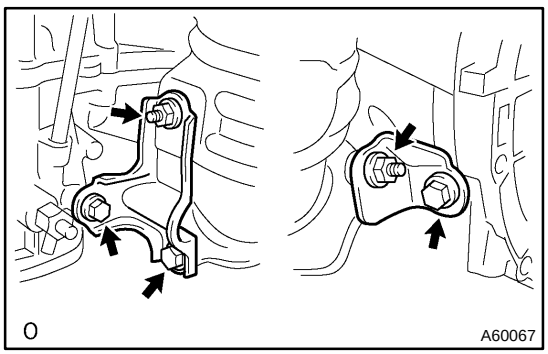

13. **REMOVE EXHAUST MANIFOLD CONVERTER SUB–ASSY**

(a) Remove the 3 bolts, 2 nuts No.1 and No.2 exhaust manifold stay.

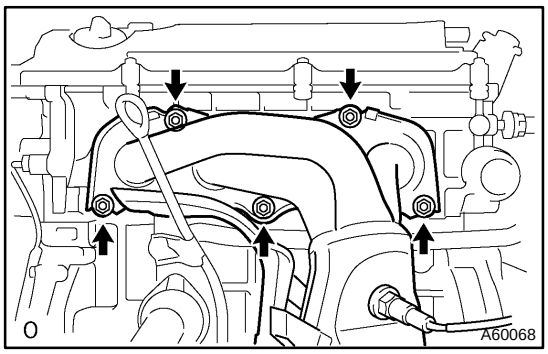

(b) Remove the 5 nuts, exhaust manifold and gasket.

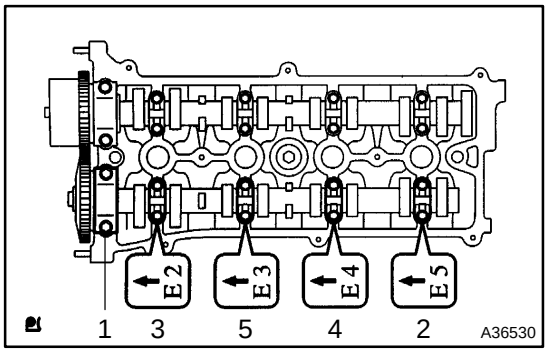

14. REMOVE NO.2 CAMSHAFT

(a) Remove the No.2 and No.3 camshaft bearing cap in the sequence shown in the illustration.
(b) Remove the No.2 camshaft.

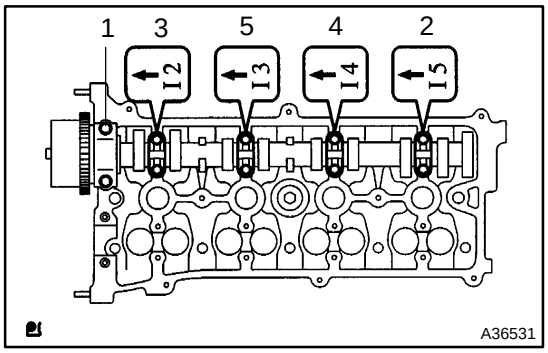

15. REMOVE CAMSHAFT

(a) Remove the No.1 and No.3 camshaft bearing cap in the sequence shown in the illustration.
(b) Remove the No.1 camshaft.

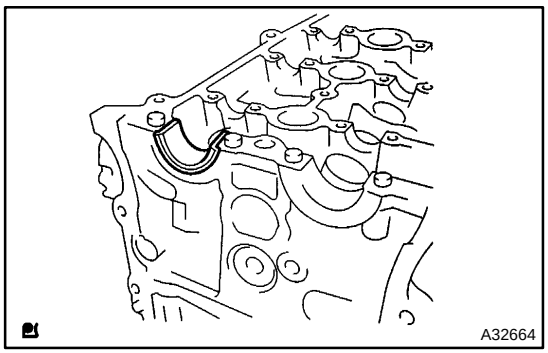

16. REMOVE CAMSHAFT BEARING NO.2

17. REMOVE CAMSHAFT TIMING OIL CONTROL VALVE ASSY

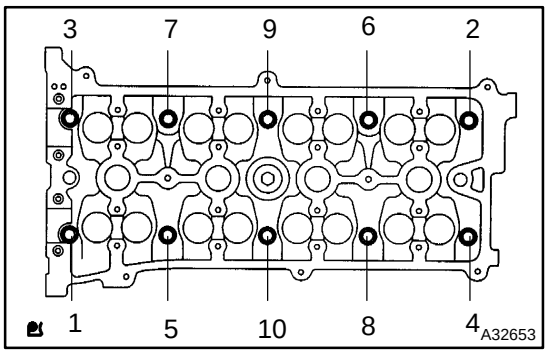

18. REMOVE CYLINDER HEAD SUB–ASSY

(a) Using a 10 mm bi–hexagon wrench, uniformly loosen and remove the 10 cylinder head bolts, in several passes, in the sequence shown. Remove the 10 cylinder head bolts and plate washers.

NOTICE:

- **Be careful not to drop washers into the cylinder head.**
- **Head warpage or cracking could result from removing bolts and installing incorrect order.**

19. REMOVE CYLINDER HEAD GASKET

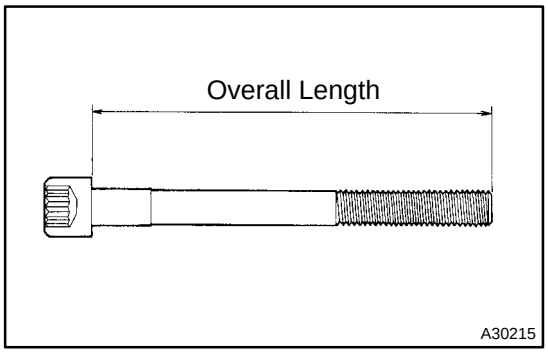

20. INSPECT CYLINDER HEAD SET BOLT

(a) Using vernier calipers, measure the length of head bolts from the seat to the end.

Standard bolt length:
161.3–162.3 mm (6.350–6.390 in.)
Maximum bolt length: 164.2 mm (6.465 in)

If the length is greater than maximum, replace the bolt.

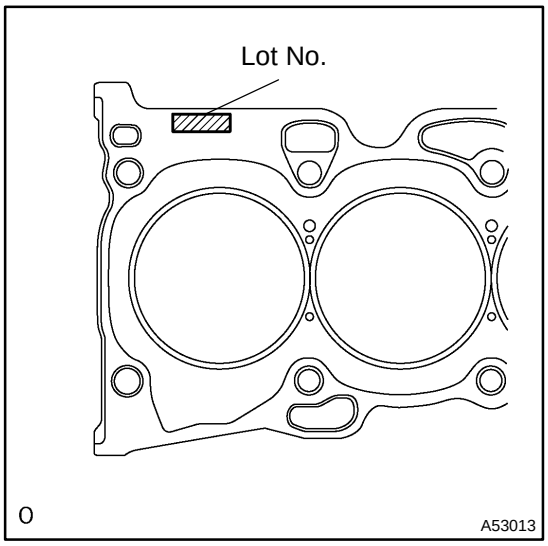

21. INSTALL CYLINDER HEAD GASKET

(a) Place a new cylinder head gasket on the cylinder block surface with the Lot No. stamp upward.

NOTICE:

- **Remove any oil from contact surface.**
- **Be careful of the installation direction.**
- **Place the cylinder head quietly in order not to damage the gasket with the bottom part of the head.**

22. INSTALL CYLINDER HEAD SUB–ASSY

HINT:
The cylinder head bolts are tightened in 2 progressive steps.

(a) Apply a light coat of engine oil on the threads and under the heads of the cylinder head bolts.
(b) Install bolts and plate washers to the cylinder head.

NOTICE:
Do not drop the washers into the cylinder head.

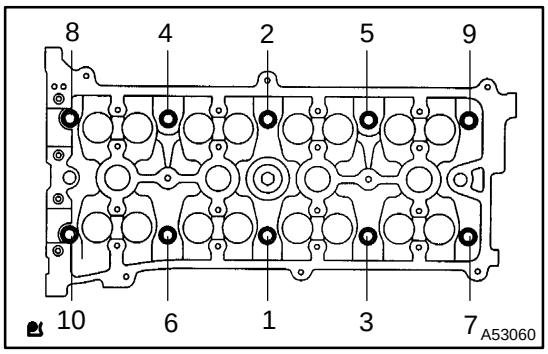

(c) Using a 10 mm bi–hexagon wrench, install and uniformly tighten the 10 cylinder head bolts and plate washers, in several passes, in the sequence shown.
Torque: 79 N·m (806 kgf·cm, 58 ft·lbf)

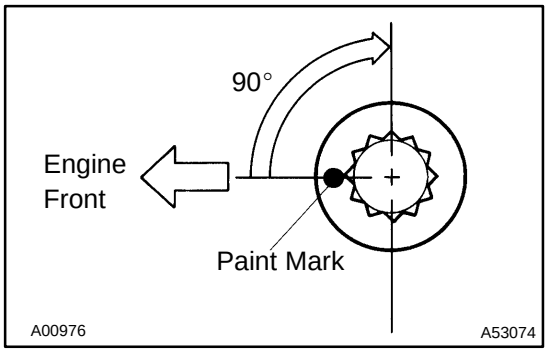

(d) Mark the front side of the cylinder head bolt with paint.
(e) Retighten the cylinder head bolts by 90° in the sequence shown.
(f) Check that the paint mark is now at a 90° angle to the front.

23. INSTALL CAMSHAFT TIMING OIL CONTROL VALVE ASSY

Torque: 9.0 N·m (92 kgf·cm, 80 in.·lbf)

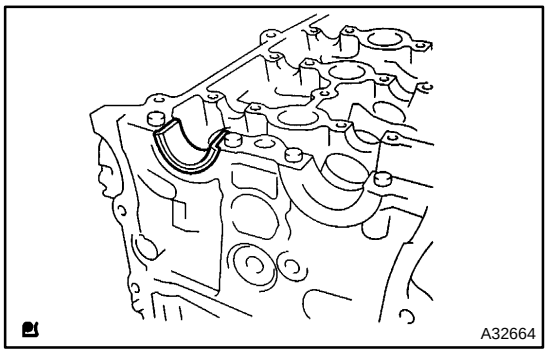

24. INSTALL CAMSHAFT BEARING NO.2

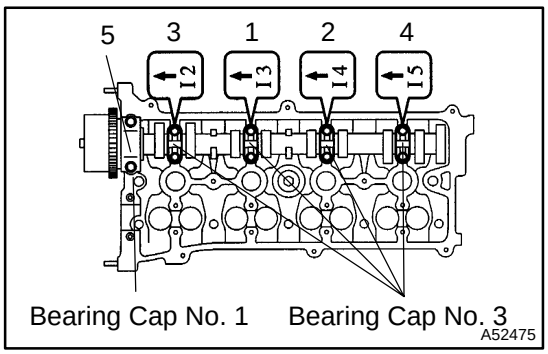

25. INSTALL CAMSHAFT

(a) Tighten the camshaft bearing cap No.1 and No.3 as the sequence shown in the illustration.
Torque:
Bearing cap No.1 30 N·m (301 kgf·cm, 22 ft·lbf)
Bearing cap No.3 9.0 N·m (92 kgf·cm, 80 in.·lbf)

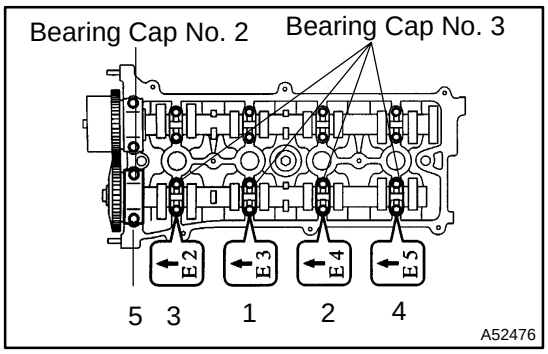

26. INSTALL NO.2 CAMSHAFT

(a) Tighten the camshaft bearing cap No.2 and No.3 as the sequence shown in the illustration.
Torque:
Bearing cap No.2 30 N·m (301 kgf·cm, 22 ft·lbf)
Bearing cap No.3 9.0 N·m (92 kgf·cm, 80 in.·lbf)

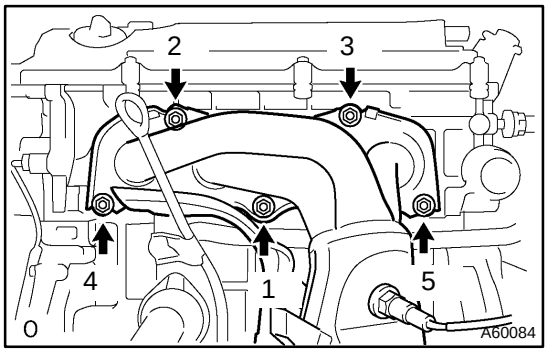

27. INSTALL EXHAUST MANIFOLD CONVERTER SUB–ASSY

(a) Install a new gasket and the exhaust manifold with the 5 nuts.
Torque: 37 N·m (378 kgf·cm, 27 ft·lbf)

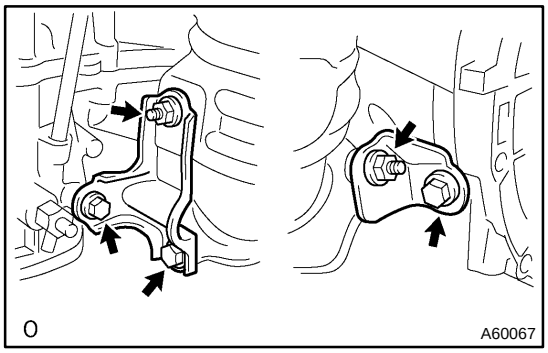

(b) Install the No.1 and No.2 exhaust manifold stay with the 3 bolts and 2 nuts.
Torque: 44 N·m (449 kgf·cm, 32 ft·lbf)

28. INSTALL EXHAUST MANIFOLD HEAT INSULATOR NO.1

Torque: 12 N·m (122 kgf·cm, 9 ft·lbf)

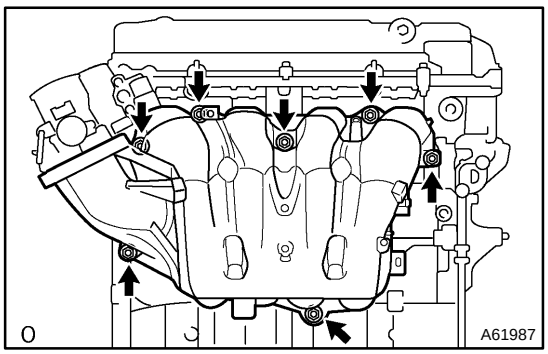

29. INSTALL INTAKE MANIFOLD

(a) Install a new gasket and the intake manifold with the 5 bolts and 2 nuts.
Torque: 30 N·m (306 kgf·cm, 22 ft·lbf)

30. CONNECT FUEL TUBE SUB–ASSY
(See page 11–1)

31. INSTALL CHAIN SUB–ASSY
(See page 14–74)
SST 09309–37010

32. ADD ENGINE OIL
33. ADD COOLANT (See page 16–6)
34. INSPECT OIL LEAK
35. CHECK ENGINE COOLANT LEAK (See page 16–1)
36. INSPECT FUEL LEAK (See page 11–5)
37. INSPECT CHECK IDLE SPEED AND IGNITION TIMING (See page 14–1)
38. INSPECT CO/HC (See page 14–1)

TIMING GEAR CASE OR TIMING CHAIN CASE OIL SEAL (2AZ–FE)

140HW–01

REPLACEMENT

1. REMOVE FRONT WHEEL RH
2. REMOVE FRONT FENDER APRON SEAL RH
3. REMOVE ENGINE COVER SUB–ASSY NO.1

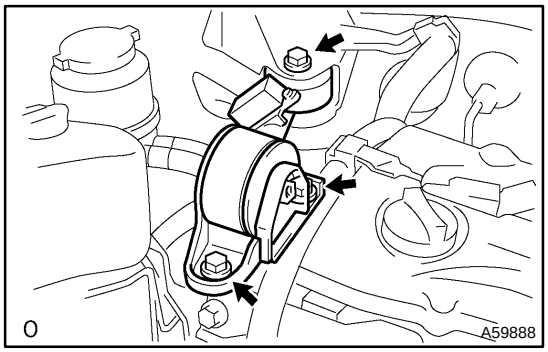

4. REMOVE ENGINE MOVING CONTROL ROD W/BRACKET

(a) Remove the 3 bolts and engine moving control rod w/ bracket.

5. REMOVE ENGINE MOUNTING STAY NO.2 RH
6. REMOVE ENGINE MOUNTING BRACKET NO.2 RH
7. REMOVE FAN AND GENERATOR V BELT
(See page14–5)

SST 09249–63010

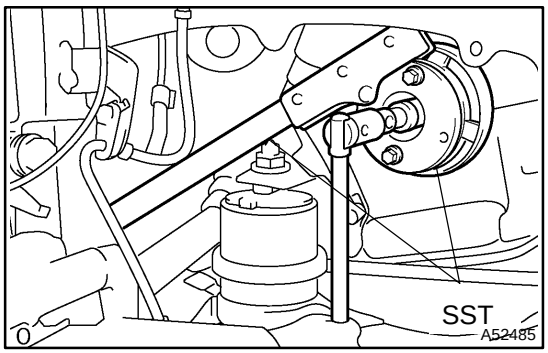

8. REMOVE CRANKSHAFT PULLEY

(a) Remove the crankshaft pulley (TMC made).

(1) Using SST, loosen the pulley bolt.

SST 09213–54015 (91651–60855), 09330–00021

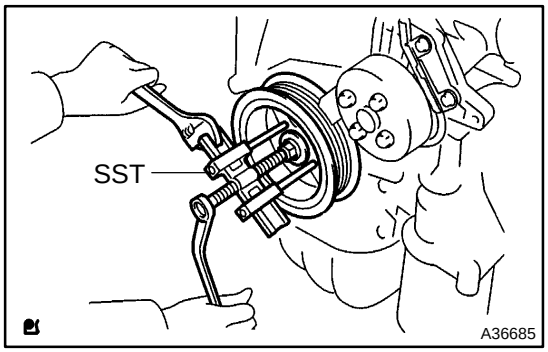

(2) Using SST, remove the crankshaft pulley.

SST 09950–50013 (09951–05010, 09952–05010, 09953–05020, 09954–05021)

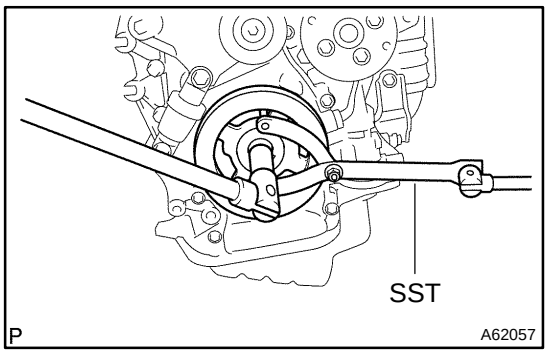

(b) Remove the crankshaft pulley (TMMK made).
(1) Using SST, loosen the pulley bolt.
SST 09960–10010 (09962–01000, 09963–01000)

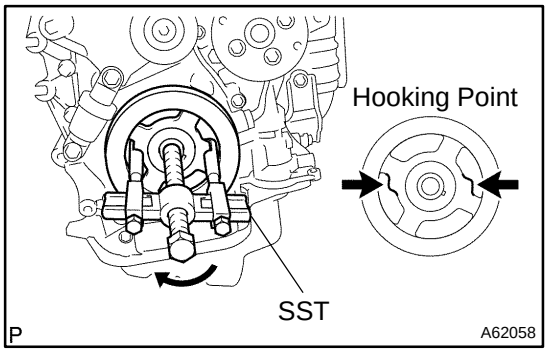

(2) Using SST, remove the crankshaft pulley.
SST 09950–40011 (09951–04010, 09952–04010, 09953–04030, 09954–04010, 09955–04041, 09957–04010, 91111–51014)

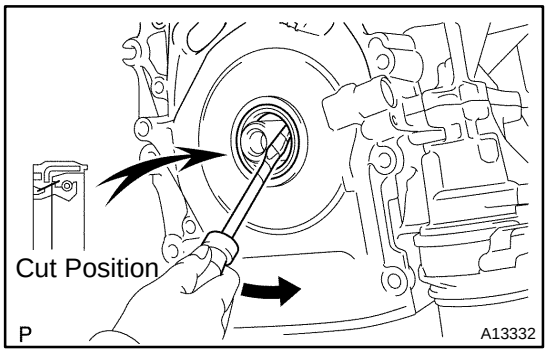

9. REMOVE TIMING GEAR CASE OR TIMING CHAIN CASE OIL SEAL

(a) Using a knife, cut off the oil seal lip.
(b) Using a screwdriver with taping tip, pry out the oil seal.
HINT:
After the removal, check if the crankshaft is not damaged.
If there is, mend it with a sandpaper (#400).

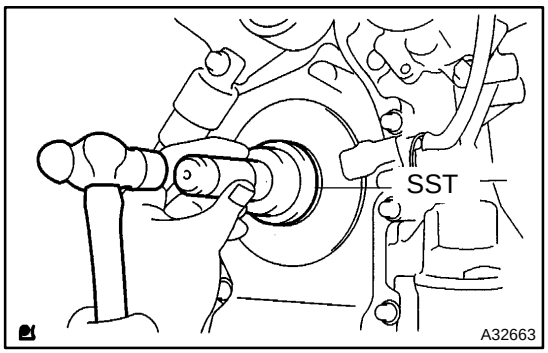

10. INSTALL TIMING GEAR CASE OR TIMING CHAIN CASE OIL SEAL

(a) Apply MP grease to a new oil seal lip.
NOTICE:
Keep the lip off foreign materials.
(b) Using SST and a hammer, tap in the oil seal until its surface is flush with the rear oil seal retainer edge.
SST 09223–22010
NOTICE:
Wipe off extra grease on the crankshaft.

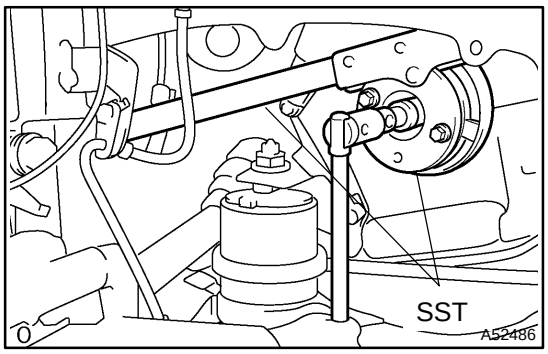

11. INSTALL CRANKSHAFT PULLEY

(a) Install the crankshaft pulley (TMC made).
(1) Align the pulley set key with the key groove of the pulley.
(2) Using SST, install the pulley bolt.
SST 09213–54015 (91651–60855), 09330–00021
Torque: 170 N·m (1,733 kgf·cm, 125 ft·lbf)

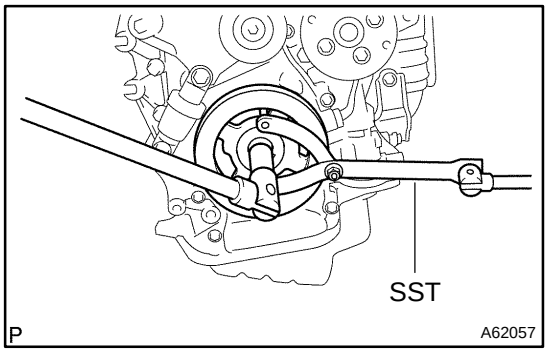

(b) Install the crankshaft pulley (TMMK made).
(1) Align the pulley set key with the key groove of the pulley.
(2) Using SST, install the pulley bolt.
SST 09960–10010 (09962–01000, 09963–01000)
Torque: 170 N·m (1,733 kgf·cm, 125 ft·lbf)

12. INSTALL FAN AND GENERATOR V BELT
(See page 14–5)
SST 09249–63010

13. INSTALL ENGINE MOUNTING BRACKET NO.2 RH

Torque: 52 N·m (531 kgf·cm, 38 ft·lbf)

14. INSTALL ENGINE MOUNTING STAY NO.2 RH

Torque: 64 N·m (653 kgf·cm, 47 ft·lbf)

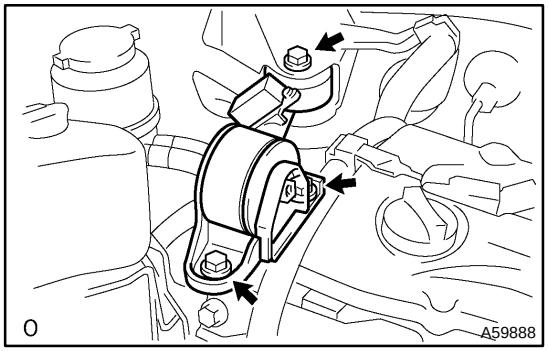

15. INSTALL ENGINE MOVING CONTROL ROD W/BRACKET

(a) Install the engine moving control rod w/bracket with 3 bolts.
Torque: 64 N·m (653 kgf·cm, 47 ft·lbf)

16. INSTALL FRONT WHEEL RH
Torque: 103 N·m (1,050 kgf·cm, 76 ft·lbf)

17. INSPECT OIL LEAK

ENGINE REAR OIL SEAL (2AZ–FE)

140HX–01

REPLACEMENT

1. SEPARATE AUTOMATIC TRANSAXLE ASSY(A/T TRANSAXLE)
(SeePage 40–14)

HINT:
Remove and install the transaxle assembly after removing the engine assy w/transaxle.

2. SEPARATE MANUAL TRANSAXLE ASSY(M/T TRANSAXLE)
(See page 41–11)

HINT:
Remove and install the transaxle assembly after removing the engine assy w/transaxle.

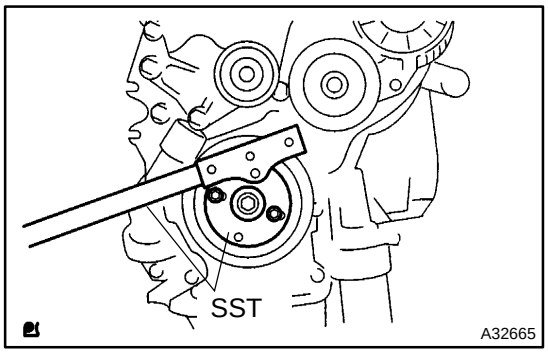

3. REMOVE DRIVE PLATE & RING GEAR SUB–ASSY(A/T TRANSAXLE)

(a) Fix the crankshaft with SST (TMC made).
SST 09213–54015 (91651–60855), 09330–00021

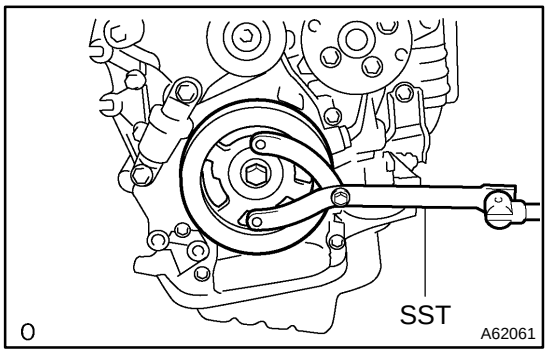

(b) Fix the crankshaft with SST (TMMK made).
SST 09960–10010 (09962–01000, 09963–01000)

(c) Remove the 8 bolts, rear spacer, drive plate and front spacer.

4. REMOVE CLUTCH COVER ASSY(M/T TRANSAXLE)
(See page 42–14)

5. REMOVE CLUTCH DISC ASSY(M/T TRANSAXLE)
(See page 42–14)

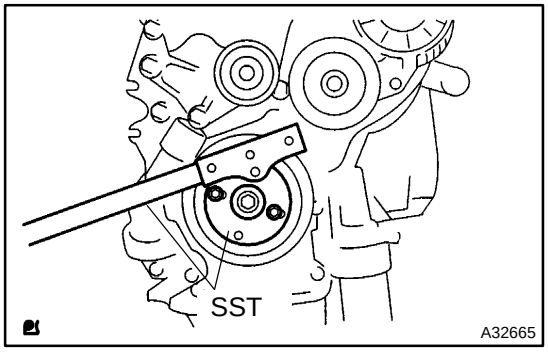

6. REMOVE FLYWHEEL SUB–ASSY(M/T TRANSAXLE)

(a) Fix the crankshaft with SST.
SST 09213–54015 (91651–60855), 09330–00021

(b) Remove the 8 bolts, rear spacer, flywheel sub–assy.

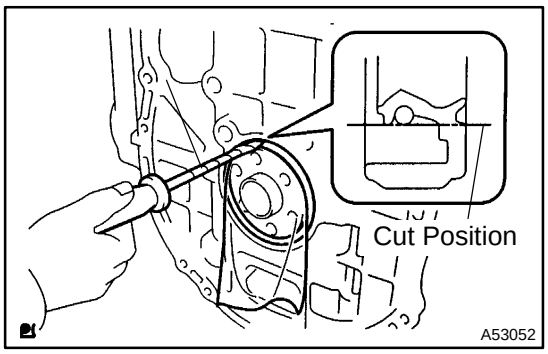

7. REMOVE ENGINE REAR OIL SEAL

(a) Using a knife, cut off the oil seal lip.
(b) Using a screwdriver with taping its tip, pry out the oil seal.

HINT:
After the removal, check if the crankshaft is not damaged.
If there is, mend it with a sandpaper (#400).

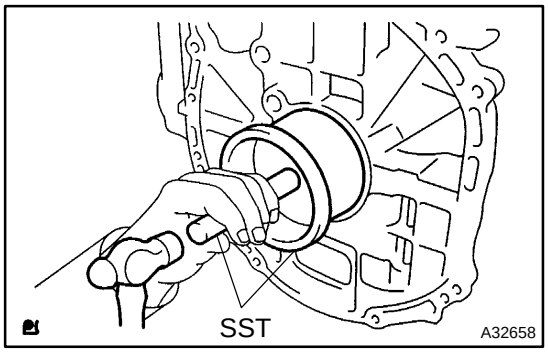

8. INSTALL ENGINE REAR OIL SEAL

(a) Apply MP grease to a new oil seal lip.

NOTICE:
Keep the lip off foreign materials.

(b) Using SST and a hammer, tap in the oil seal until its surface is flush with the rear oil seal retainer edge.
SST 09223–15030, 09950–70010 (09951–07100)

NOTICE:
Wipe off extra grease on the crankshaft.

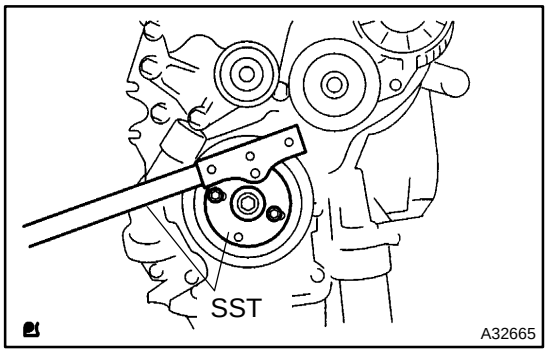

9. INSTALL DRIVE PLATE & RING GEAR SUB–ASSY(A/T TRANSAXLE)

(a) Fix the crankshaft with SST (TMC made).
SST 09213–54015 (91651–60855), 09330–00021

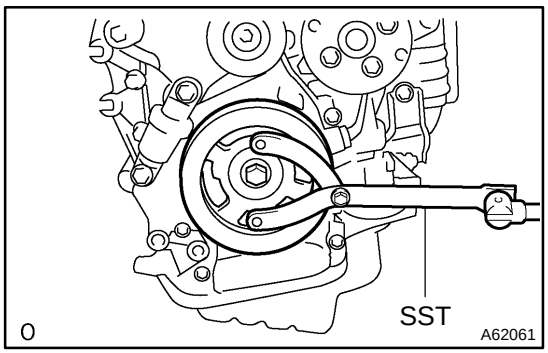

(b) Fix the crankshaft with SST (TMMK made).
SST 09960–10010 (09962–01000, 09963–01000)
(c) Clean the bolt and the bolt hole.
(d) Apply Adhesive to 2 or 3 threads of the bolt end.
Adhesive :
Part No. 08833–00070, THREE BOND or equivalent

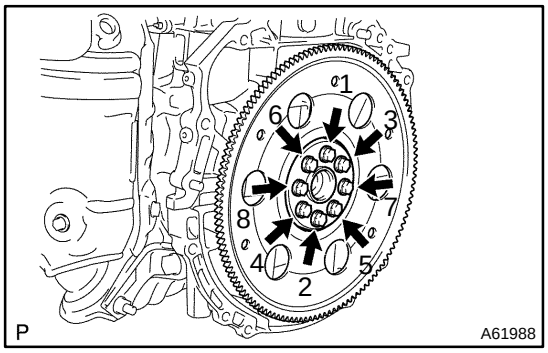

(e) Install and uniformly tighten the 8 bolts, in several passes, in the sequence shown.
Torque: 98 N·m (1,000 kgf·cm, 72 ft·lbf)

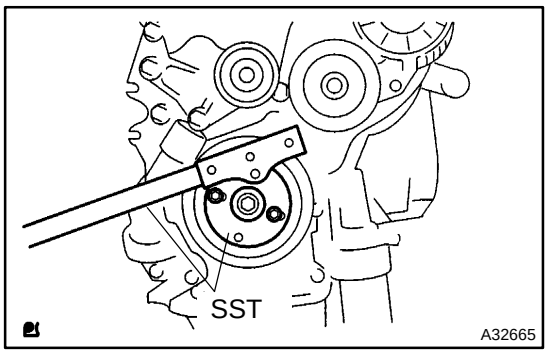

10. INSTALL FLYWHEEL SUB–ASSY(M/T TRANSAXLE)

(a) Fix the crankshaft with SST.
SST 09213–54015 (91651–60855), 09330–00021
(b) Clean the bolt and the bolt hole.
(c) Apply Adhesive to 2 or 3 threads of the bolt end.
Adhesive:
Part No. 08833–00070, THREE BOND or equivalent.

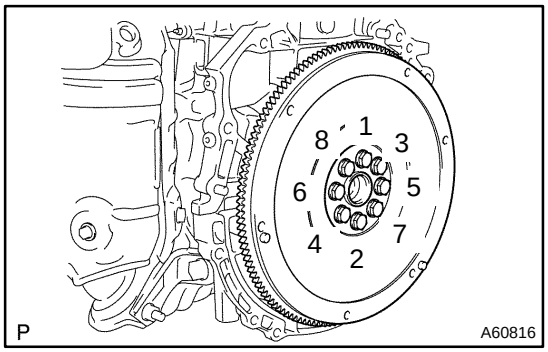

(d) Install and uniformly tighten the 8 bolts, in several passes, in the sequence shown.
Torque: 130 N·m (1,330 kgf·cm, 96 ft·lbf)

11. INSTALL CLUTCH DISC ASSY(M/T TRANSAXLE)
(See page 42–14)
12. INSTALL CLUTCH COVER ASSY(M/T TRANSAXLE)
(See page 42–14)
13. INSTALL AUTOMATIC TRANSAXLE ASSY(A/T TRANSAXLE)
(SeePage 40–14)
14. INSTALL MANUAL TRANSAXLE ASSY(M/T TRANSAXLE)
(See page 41–11)

CYLINDER HEAD ASSY (2AZ–FE)

14061–02

OVERHAUL

1. REMOVE VALVE LIFTER

HINT:

Arrange the valve lifters in the correct order.

2. REMOVE INTAKE VALVE

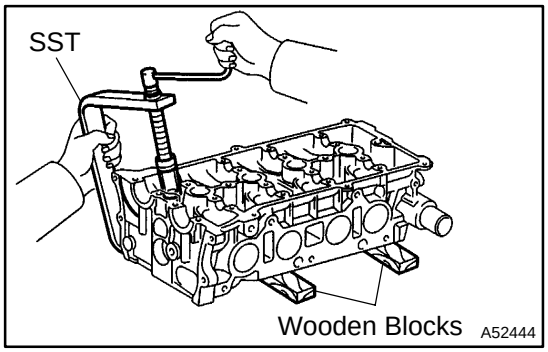

(a) Using SST and wooden blocks, compress and remove the 8 valve spring retainer locks.
SST 09202–70020 (09202–00010)

(b) Remove the parts below from the cylinder head.

1	Retainer
2	Valve spring
3	Intake valve

HINT:

Arrange the removed parts in the correct order.

3. REMOVE EXHAUST VALVE

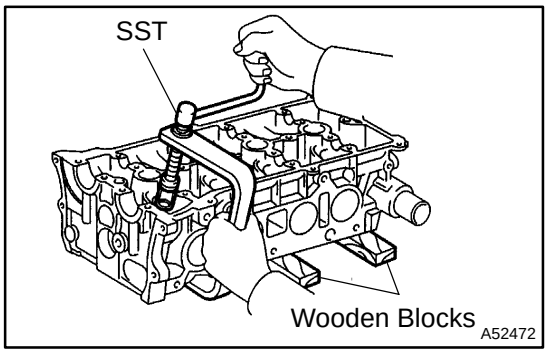

(a) Using SST and wooden blocks, compress and remove the 8 valve spring retainer locks.
SST 09202–70020 (09202–00010)

(b) Remove the parts below from the cylinder head.

1	Retainer
2	Valve spring
3	Exhaust valve

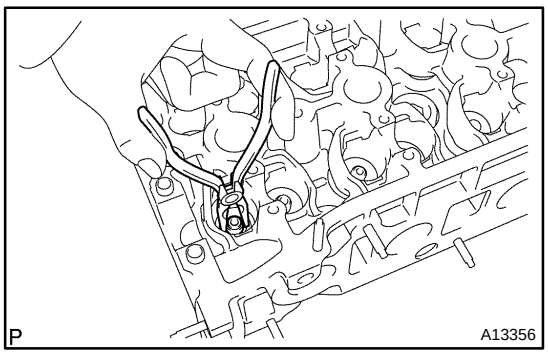

4. REMOVE VALVE STEM OIL O SEAL OR RING

(a) Using needle–nose pliers, remove the oil seals.

5. REMOVE VALVE SPRING SEAT

6. REMOVE STUD BOLT

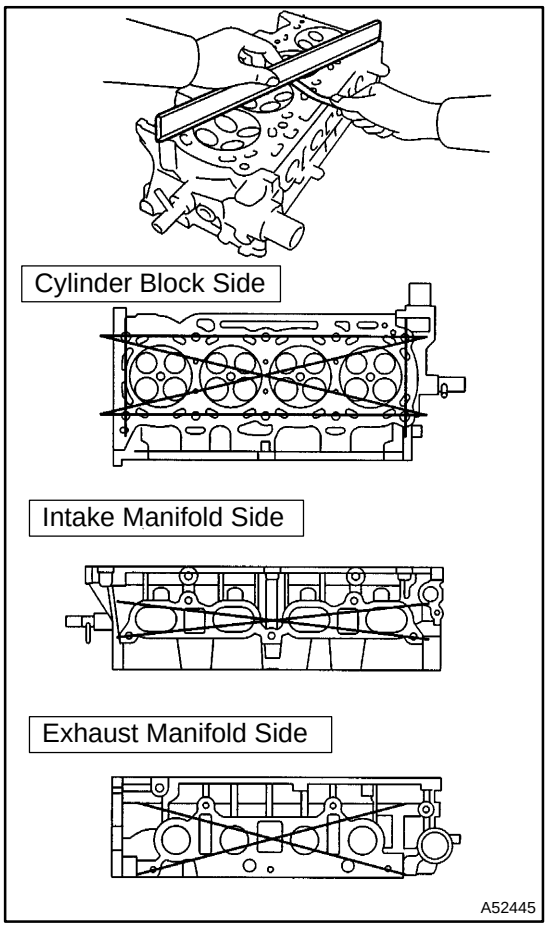

7. INSPECT CYLINDER HEAD FOR FLATNESS

(a) Using a precision straight edge and a feeler gauge, measure the surface contacting the cylinder block and the manifolds for warpage.

Maximum warpage:
Cylinder block side 0.05 mm (0.0020 in.)
Intake manifold side 0.08 mm (0.0031 in.)
Exhaust manifold side 0.08 mm (0.0031 in.)

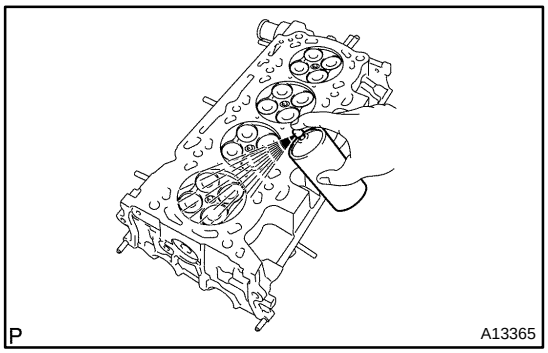

8. INSPECT CYLINDER HEAD FOR CRACKS

(a) Using a dye penetrate, check the intake ports, exhaust ports and cylinder surface for cracks.

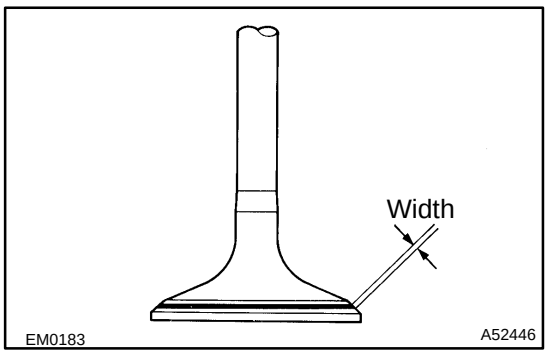

9. INSPECT VALVE SEATS

(a) Apply a light coat of prussian blue (or white lead) to the valve face.

(b) Lightly press the valve against the seat.

(c) Check the valve face and seat according to the following procedure.

(1) If blue appears 360° around the face, the valve is concentric. If not, replace the valve.

(2) If blue appears 360°around the valve sat, the guide and face are concentric. If not, resurface the seat.

(3) Check that the sat contact is in the middle of the valve face with the width between 1.0 – 1.4 mm (0.039 – 0.055 in.).

10. REPAIR VALVE SEATS

NOTICE:

Take off a cutter gradually to make smooth seats.

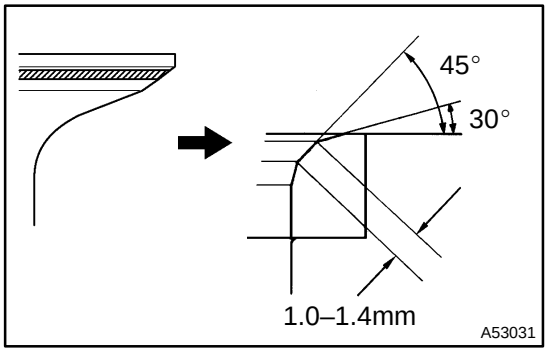

(a) If the seating is too high on the valve face, use 30° and 45° cutters to correct the seat.

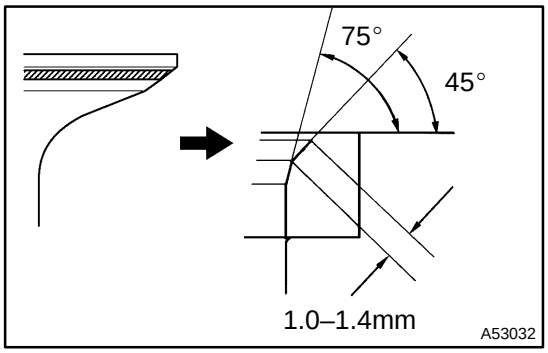

(b) If the seating is too low on the valve face, use 75° and 45° cutters to correct the seat.

(c) Hand–lap the valve and valve seat with an abrasive compound.

(d) Check the valve seating position.

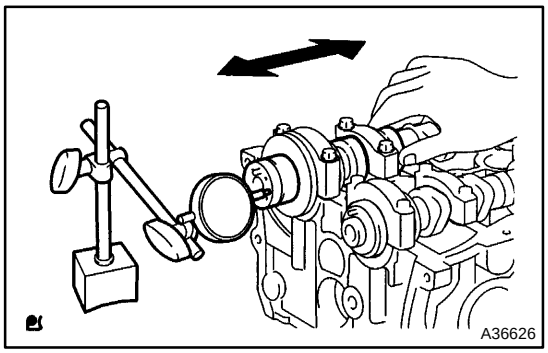

11. INSPECT CAMSHAFT THRUST CLEARANCE

(a) Install the camshafts.

(b) Using a dial indicator, measure the thrust clearance while moving the camshaft back and forth.

Standard thrust clearance:
Intake 0.040 – 0.095 mm (0.0016 – 0.0037 in.)
Exhaust 0.080 – 0.135 mm (0.0032 – 0.0053 in.)
Maximum thrust clearance:
Intake 0.11 mm (0.0043 in.)
Exhaust 0.15 mm (0.0059 in.)

(c) If the thrust clearance is greater than maximum, replace the cylinder head. If the thrust surface is damaged, replace the camshaft.

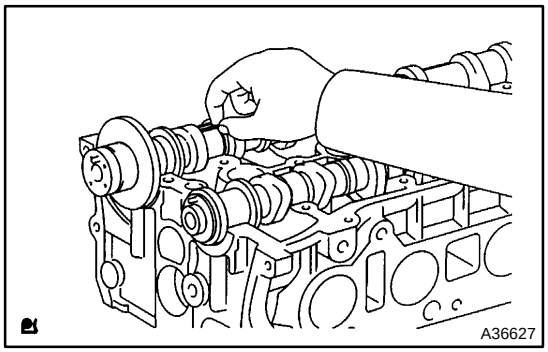

12. INSPECT CAMSHAFT OIL CLEARANCE

(a) Clean the bearing caps and camshaft journals.

(b) Place the camshafts on the cylinder head.

(c) Lay a strip of plastigage across each of the camshaft journal.

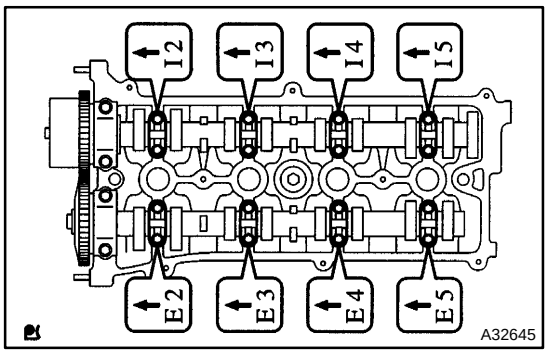

(d) Install the bearing caps.
Torque:
No. 1 30 N·m (301 kgf·cm, 22 ft·lbf)
No. 2 30 N·m (301 kgf·cm, 22 ft·lbf)
No. 3 9 N·m (92 kgf·cm, 80 in.·lbf)

NOTICE:
Do not turn the camshaft.

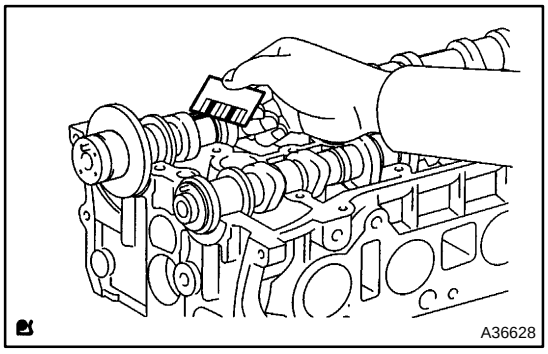

(e) Remove the bearing cap, and measure the plastigage at its widest point.
Standard oil clearance:
Intake No. 1 journal bearing mark 1
0.007 – 0.038 mm (0.0028 – 0.00150 in.)
Intake No. 1 journal bearing mark 2
0.008 – 0.038 mm (0.0031 – 0.00150 in.)
Intake No. 1 journal bearing mark 3
0.008 – 0.038 mm (0.0031 – 0.00150 in.)
Other journals
0.025 – 0.062 mm (0.00098 – 0.00244 in.)
Exhaust No. 1 journal
0.040 – 0.079 mm (0.00157 – 0.00311 in.)
Other journals
0.025 – 0.062 mm (0.00098 – 0.00244 in.)
Maximum oil clearance:
Intake No. 1 journal 0.07 mm (0.0028 in.)
Other journals 0.10 mm (0.0039 in.)

NOTICE:
Completely remove the plastigage after the inspection.

(f) If the oil clearance is greater than maximum, replace the camshaft. If necessary, replace the cylinder head.

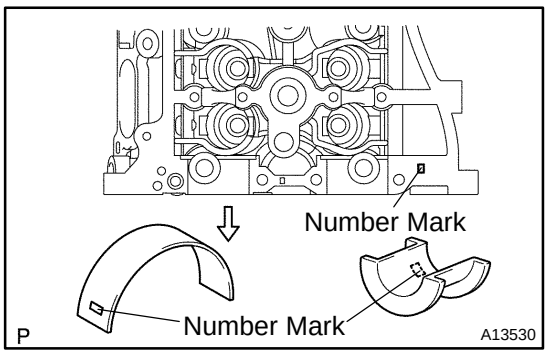

(g) If the oil clearance on No.1 journal is greater than maximum, choose and replace the bearing.

HINT:

Cylinder head journal bore diameter

Mark ”1”	40.000 – 40.008 mm (1.57480 – 1.57511 in.)
Mark ”2”	40.009 – 40.017 mm (1.57515 – 1.57547 in.)
Mark ”3”	40.018 – 40.025 mm (1.57551 – 1.57578 in.)

Standard bearing center wall thickness

Mark ”1”	2.000 – 2.004 mm (0.07874 – 0.07890 in.)
Mark ”2”	2.005 – 2.008 mm (0.07894 – 0.07905 in.)
Mark ”3”	2.009 – 2.012 mm (0.07909 – 0.07921 in.)

Camshaft journal diameter

	35.971 – 35.985 mm (1.41648 – 1.41673 in.)

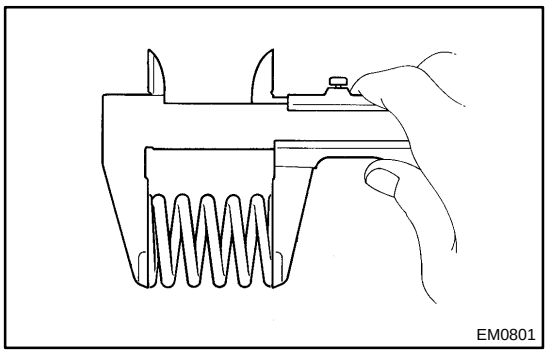

13. INSPECT INNER COMPRESSION SPRING

(a) Check the free length.
(1) Using vernier calipers, measure the free length of the valve spring.
Free length: 45.7 mm (1.799 in.)

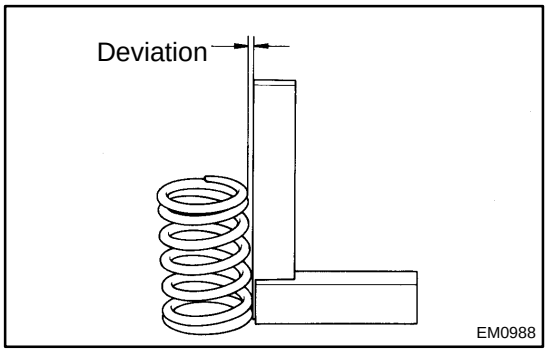

(b) Check the deviation.
(1) Using a steel square, measure the deviation of the valve spring.
Maximum deviation: 1.6 mm (0.063 in.)
Maximum angle (reference): 2°

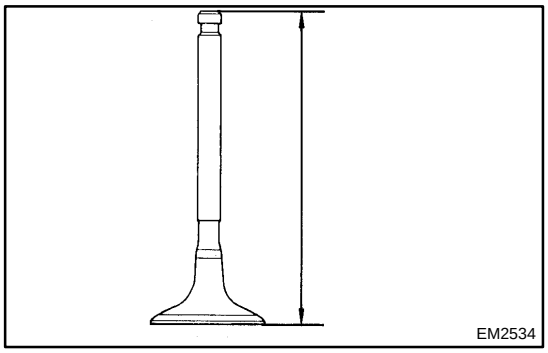

14. INSPECT INTAKE VALVE

(a) Check the valve overall length.
(1) Using vernier calipers, measure the valve overall length.
Standard overall length: 101.71 mm (4.0043in.)
Minimum overall length: 101.21 mm (3.9846in.)

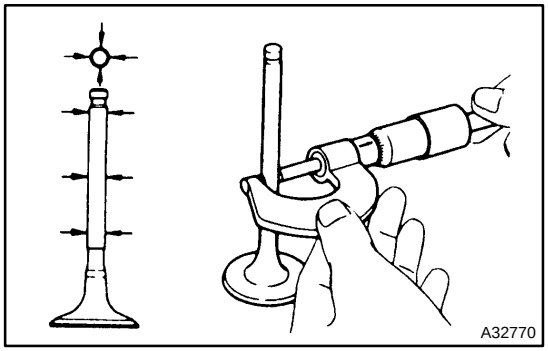

(b) Check the diameter of the valve stem.
(1) Using a micrometer, measure the diameter of the valve stem.
Valve stem diameter:
5.470 – 5.485 mm (0.2154 – 0.2159 in.)

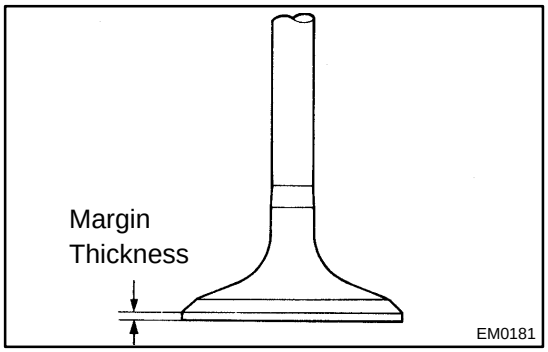

(c) Check the valve head margin thickness.
(1) Using vernier calipers, measure the valve head margin thickness.
Standard margin thickness:
1.05 – 1.45 mm (0.041 – 0.057 in.)
Minimum margin thickness: 0.5 mm (0.020 in.)

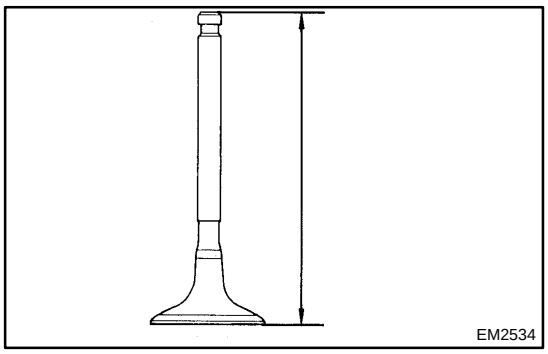

15. INSPECT EXHAUST VALVE

(a) Check the valve overall length.
(1) Using vernier calipers, measure the valve overall length.
Standard overall length: 101.15 mm (3.9823in.)
Minimum overall length: 100.70 mm (3.9646 in.)

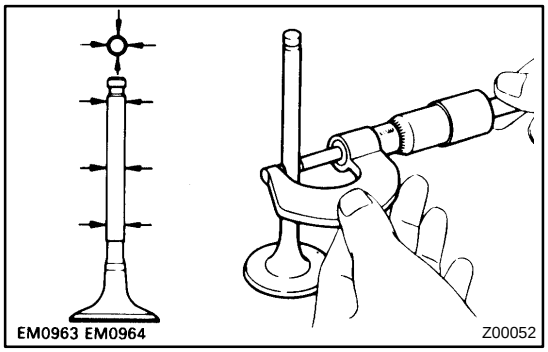

(b) Check the diameter of the valve stem.
(1) Using a micrometer, measure the diameter of the valve stem.
Valve stem diameter:
5.465 – 5.480 mm (0.2152 – 0.2157 in.)

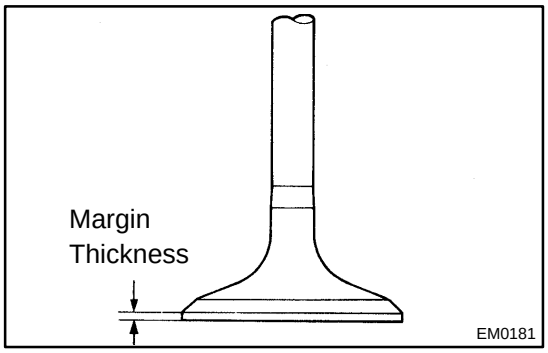

(c) Check the valve head margin thickness.
(1) Using vernier calipers, measure the valve head margin thickness.
Standard margin thickness:
1.2 – 1.6 mm (0.047 – 0.063 in.)
Minimum margin thickness: 0.5 mm (0.020 in.)

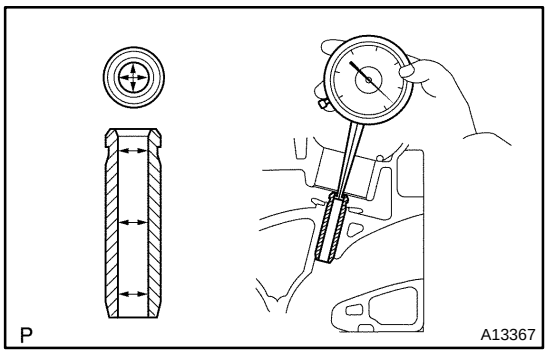

16. INSPECT INTAKE VALVE GUIDE BUSH

(a) Using a caliper gauge, measure the inside diameter of the guide bushing.
Bushing inside diameter:
5.510 – 5.530 mm (0.2169 – 0.2177 in.)
(b) Subtract the valve stem diameter measurement from the guide bushing inside diameter measurement.
Standard oil clearance:
0.025 – 0.060 mm (0.00098 – 0.00236 in.)
Maximum oil clearance: 0.08 mm (0.0031 in.)

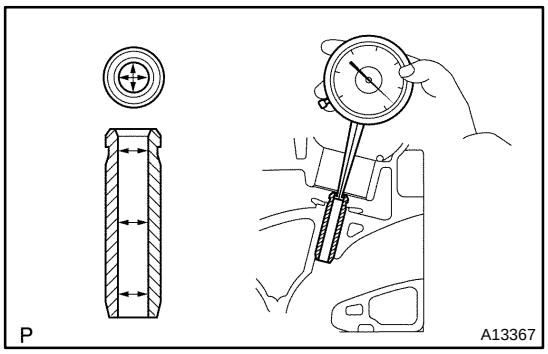

17. INSPECT EXHAUST VALVE GUIDE BUSH

(a) Using a caliper gauge, measure the inside diameter of the guide bushing.
Bushing inside diameter:
5.510 – 5.530 mm (0.2169 – 0.2177 in.)

(b) Subtract the valve stem diameter measurement from the guide bushing inside diameter measurement.
Standard oil clearance:
0.030 – 0.065 mm (0.0012 – 0.0026 in.)
Maximum oil clearance: 0.10 mm (0.0039 in.)

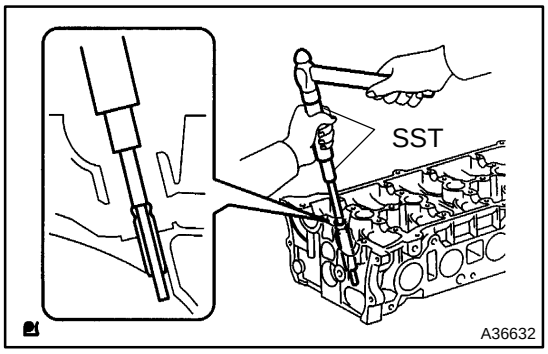

18. REMOVE INTAKE VALVE GUIDE BUSH

(a) Using SST and a hammer, tap out the guide bushing.
SST 09201–10000 (09201–01050), 09950–70010 (09951–07100)

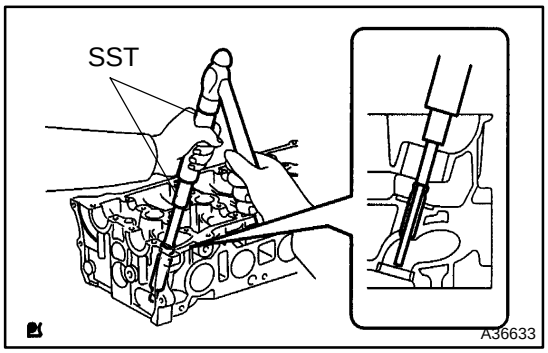

19. REMOVE EXHAUST VALVE GUIDE BUSH

(a) Using SST and a hammer, tap out the guide bushing.
SST 09201–10000 (09201–01050), 09950–70010 (09951–07100)

20. INSTALL INTAKE VALVE GUIDE BUSH

(a) Using a caliper gauge, measure the bushing bore diameter of the cylinder head.
Diameter: 10.285 – 10.306 mm (0.4049 – 0.4057 in.)

(b) Install the STD bushing if the diameter is within specified diameter.

HINT:

STD	10.333 – 10.344 mm (0.4068 – 0.4072 in.)

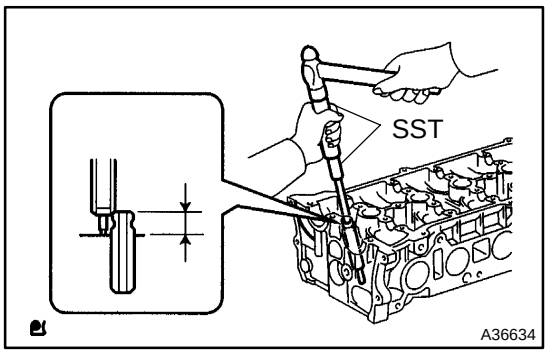

(c) Using SST and a hammer, tap in a new guide bushing to the specified protrusion height.
Protrusion height: 9.6 – 10.0 mm (0.3779 – 0.3937 in.)
SST 09201–10000 (09201–01050), 09950–70010 (09951–07100), 23801

(d) Using a sharp 5.5 mm reamer, ream the guide bushing to obtain the standard specified clearance between the guide bushing and valve stem.
Standard oil clearance:
0.025 – 0.060 mm (0.00098 – 0.00236 in.)

21. INSTALL EXHAUST VALVE GUIDE BUSH

(a) Using a caliper gauge, measure the bushing bore diameter of the cylinder head.
Diameter: 10.285 – 10.306 mm (0.4049 – 0.4057 in.)

(b) Install the STD bushing if the diameter is within specified diameter.

HINT:

STD	10.333 – 10.344 mm (0.4068 – 0.4072 in.)

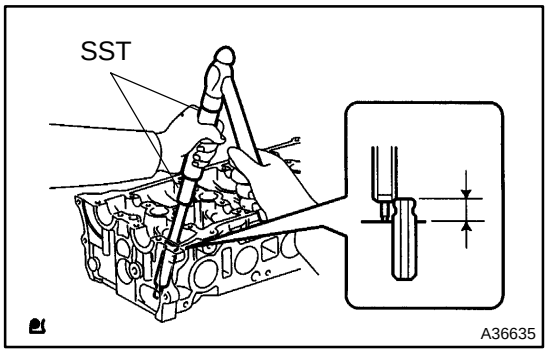

(c) Using SST and a hammer, tap in a new guide bushing to the specified protrusion height.
Protrusion height: 9.6 – 10.0 mm (0.3779 – 0.3937 in.)

(d) Using a sharp 5.5 mm reamer, ream the guide bushing to obtain the standard specified clearance between the guide bushing and valve stem.
SST 09201–10000 (09201–01050), 09950–70010 (09951–07100), 23801
Standard oil clearance:
0.030 – 0.065 mm (0.00118 – 0.00256 in.)

22. INSPECT VALVE LIFTER

(a) Check the lifter diameter.
(1) Using a micrometer, measure the lifter diameter.
Lifter diameter:
30.966 – 30.976 mm (1.2191 – 1.2195 in.)

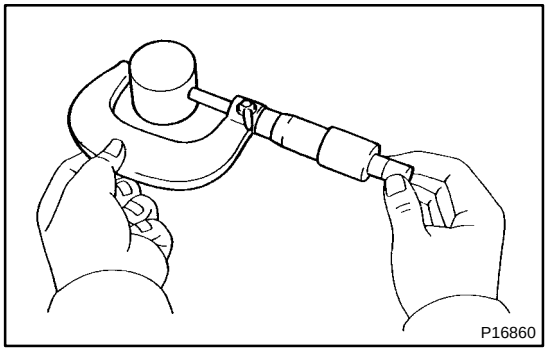

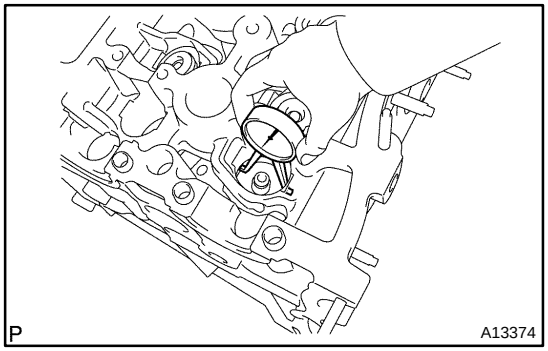

(b) Check the valve lifter oil clearance.
(1) Using a caliper gauge, measure the lifter bore diameter of the cylinder head.
Lifter bore diameter:
31.009 – 31.025 mm (1.2208 – 1.2215 in.)

(c) Subtract the lifter diameter measurement from the lifter bore diameter measurement.
Standard oil clearance:
0.033 – 0.059 mm (0.0013 – 0.0023 in.)
Maximum oil clearance: 0.07 mm (0.0028 in.)

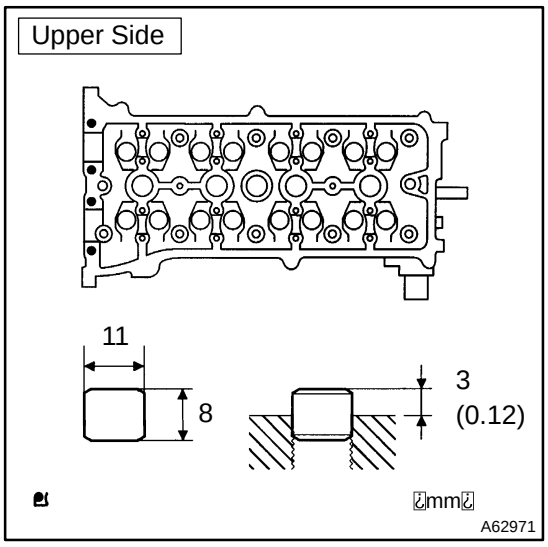

23. INSTALL RING W/HEAD PIN

(a) Using a plastic–faced hammer, tap in a new ring pin to the specified protrusion height.
Protrusion height: 3 mm (0.12 in.)

24. INSTALL STUD BOLT

Torque:
Bolt A 5 N·m (51 kgf·cm, 44 in.·lbf)
Bolt B 5 N·m (51 kgf·cm, 44 in.·lbf)
Bolt C 10 N·m (97 kgf·cm, 84 in.·lbf)
Bolt D 10 N·m (97 kgf·cm, 84 in.·lbf)

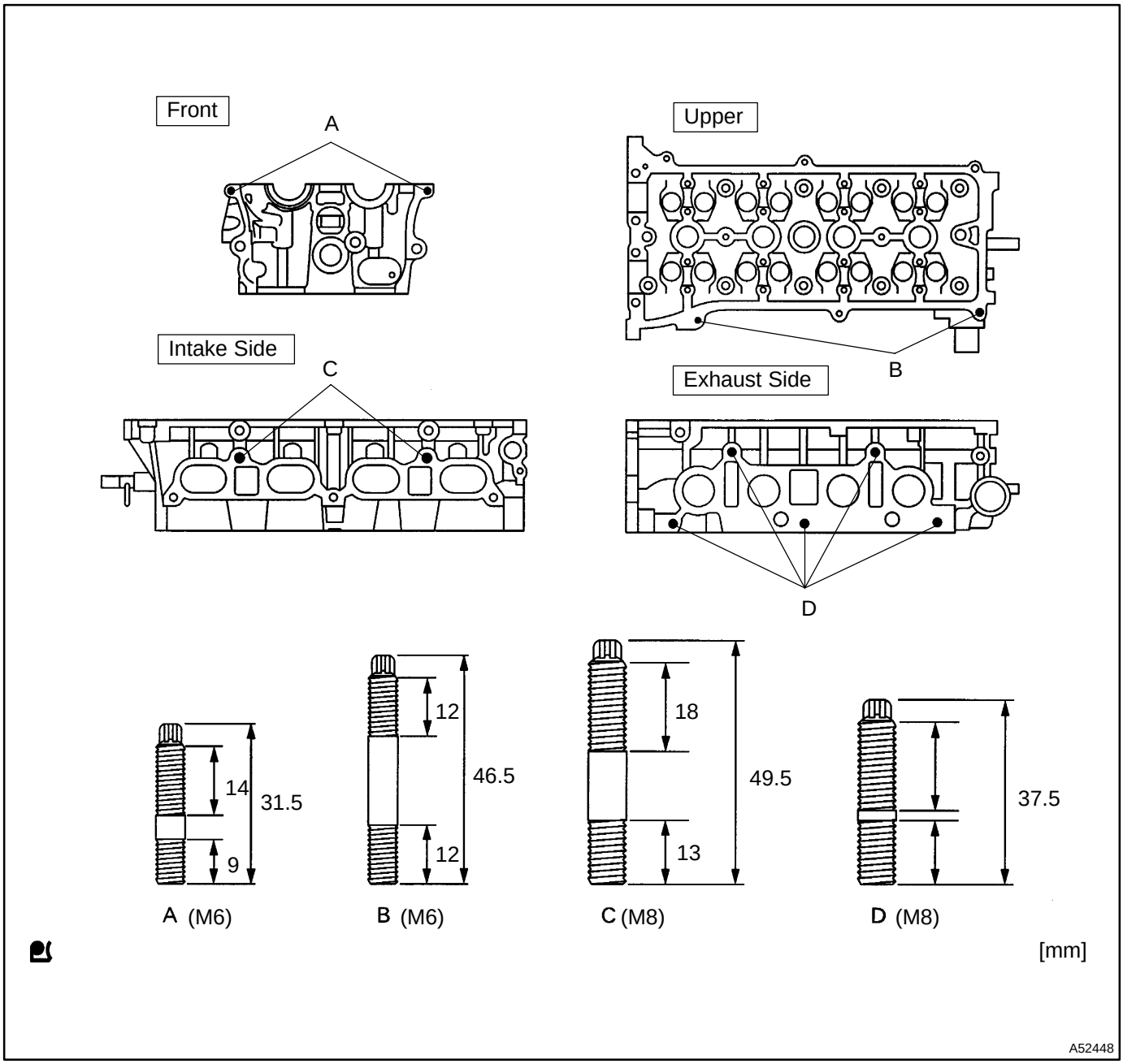

25. INSTALL VALVE SPRING SEAT

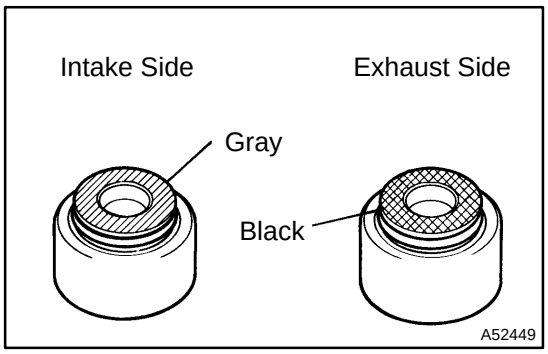

26. INSTALL VALVE STEM OIL O SEAL OR RING

(a) Apply a light coat of engine oil on new valve stem seals.

NOTICE:

Pay much attention assembling the oil seal for intake and exhaust. Assembling the wrong one may cause a failure.

HINT:

The intake valve oil seal is gray and the exhaust valve oil seal is black.

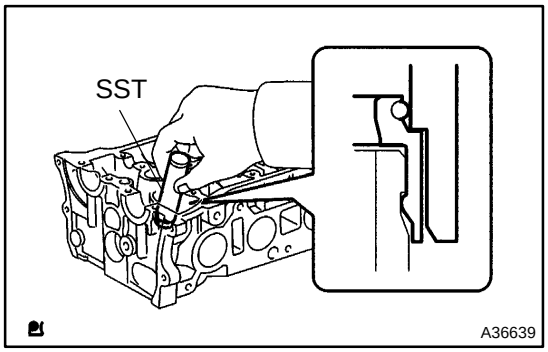

(b) Using SST, push in a the oil seal.
SST 09201–41020

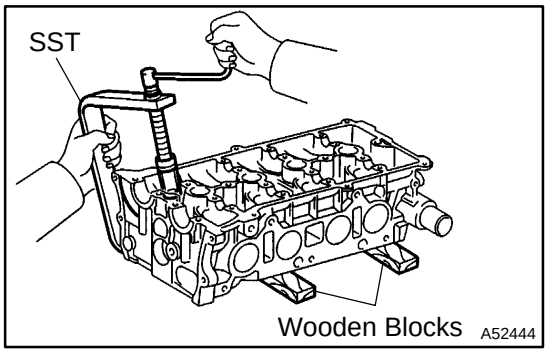

27. INSTALL INTAKE VALVE

(a) Install the parts below to the cylinder head.

1	Intake valve
2	Spring
3	Retainer

(b) Using SST and wooden blocks, compress and install 2 valve spring retainer locks.
SST 09202–70020 (09202–00010)

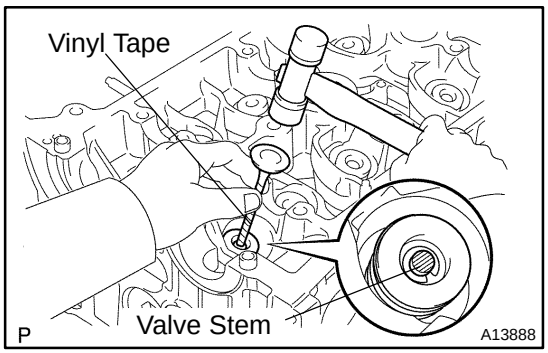

(c) Using a plastic–faced hammer and the valve stem (not in use) tip wound with vinyl tape, lightly tap the valve stem tip to ensure a proper fit.

NOTICE:

Be careful not to damage the valve stem tip.

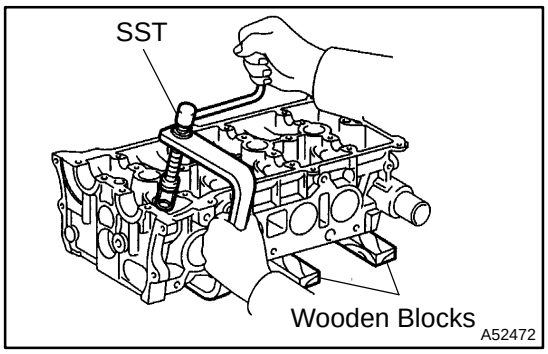

28. INSTALL EXHAUST VALVE

(a) Install the parts below to the cylinder head.

1	Exhaust valve
2	Spring
3	Retainer

(b) Using SST and wooden blocks, compress and install 2 valve spring retainer locks.
SST 09202–70020 (09202–00010)

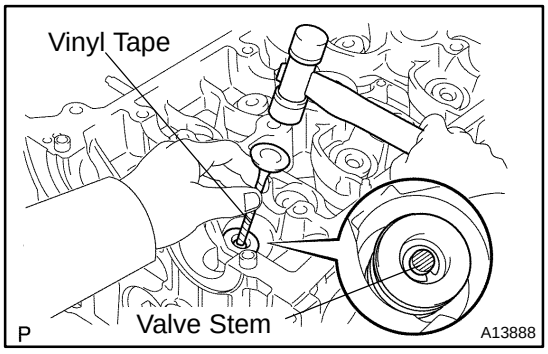

(c) Using a plastic–faced hammer and the valve stem (not in use) tip wound with vinyl tape, lightly tap the valve stem tip to ensure a proper fit.

NOTICE:
Be careful not to damage the valve stem tip.

29. INSTALL VALVE LIFTER

(a) Assemble the valve lifter and the tip of the valve stem with a light coat of engine oil applied.

NOTICE:
Install the valve lifters originally placed.

CYLINDER BLOCK (2AZ–FE)

OVERHAUL

14062–02

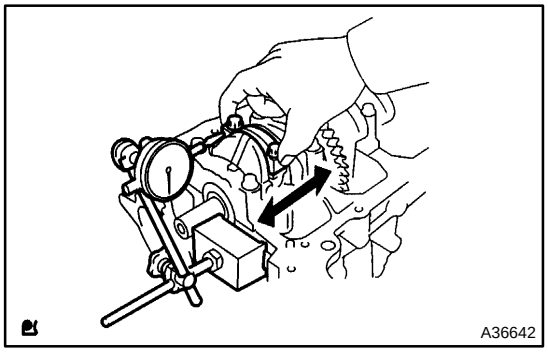

1. INSPECT CONNECTING ROD THRUST CLEARANCE

(a) Using a dial indicator, measure the thrust clearance while moving the connecting rod back and forth.
Standard thrust clearance:
0.160 – 0.362 mm (0.0063 – 0.0143 in.)
Maximum thrust clearance: 0.362 mm (0.0143 in.)

(b) If the thrust clearance is greater than maximum, replace the connecting rod assembly(s). If necessary, replace the crankshaft.

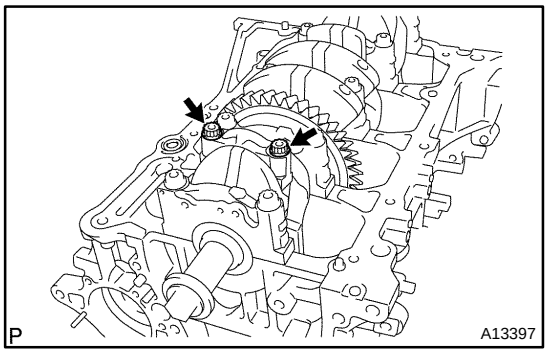

2. INSPECT CONNECTING ROD OIL CLEARANCE

HINT:
The connecting rod cap bolts are tightened in 2 progressive steps.

(a) Check the matchmarks on the connecting rod and cap are aligned to ensure correct reassembly.

HINT:
The matchmarks on the connecting rods and caps are for ensuring correct reassembly.

(b) Using a 12 mm socket wrench, remove the 2 connecting rod cap bolts.

(c) Clean the crank pin and bearing.

(d) Check the crank pin and bearing for pitting and scratches.

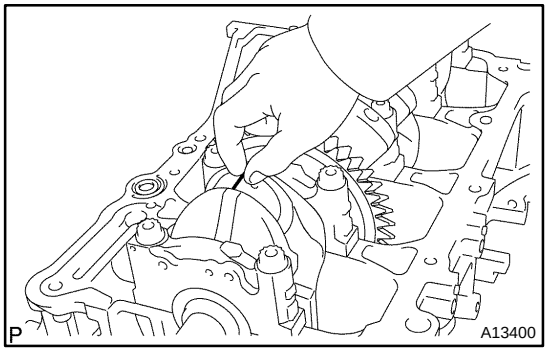

(e) Lay a strip of plastigage on the crank pin.

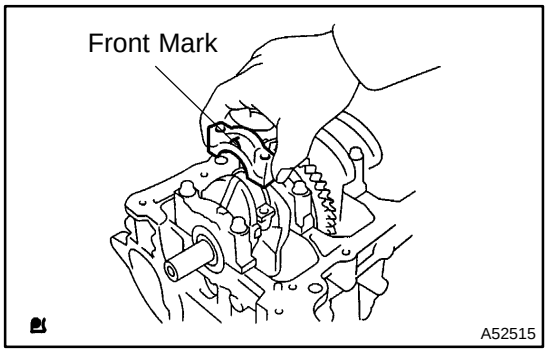

(f) Check that the front mark of the connecting rod cap is facing in the correct direction.

(g) Apply a light coat of engine oil on the threads and under the heads of the connecting rod cap bolts.

(h) Using a 12 mm socket wrench, tighten the bolts in several passes by the specified torque.
Torque: 25 N·m (250 kgf·cm, 18 ft·lbf)

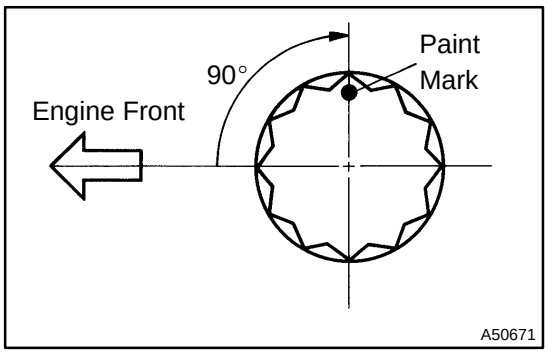

(i) Mark the front of the connecting rod cap bolts with paint.
(j) Retighten the cap bolts by 90° as shown in the illustration.

NOTICE:
Do not turn the crankshaft.

(k) Remove the 2 bolts, connecting rod cap and lower bearing.

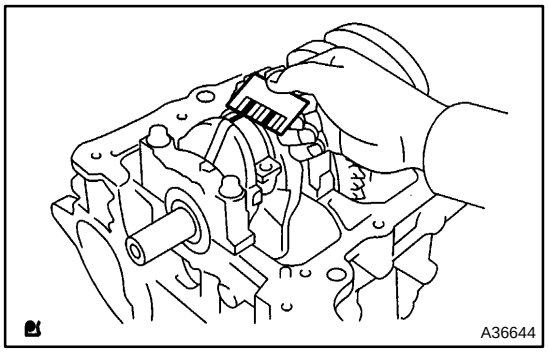

(l) Measure the plastigage at its widest point.
Standard oil clearance:
0.024 – 0.048 mm (0.0009 – 0.0019 in.)
Maximum oil clearance: 0.08 mm (0.0031 in.)

NOTICE:
Completely remove the plastigage.

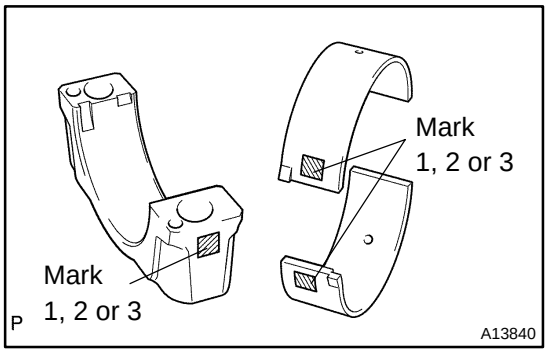

(m) If replacing a bearing, replace it with one having the same number as marked on the connecting rod. There are 3 sizes of standard bearings, marked ”1”, ”2” and ”3” accordingly.

HINT:

Standard bearing center wall thickness.

Mark 1	1.485 – 1.488 mm (0.0585 – 0.0586 in.)
Mark 2	1.488 – 1.491 mm (0.0586 – 0.0587 in.)
Mark 3	1.491 – 1.494 mm (0.0587 – 0.0588 in.)

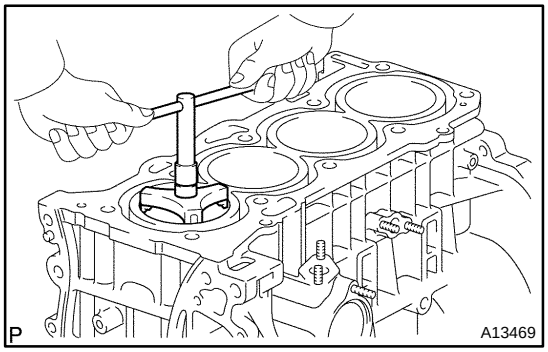

3. REMOVE PISTON SUB–ASSY W/CONNECTING ROD

(a) Using a ridge reamer, remove all the carbon from the top of the cylinder.
(b) Push the piston, connecting rod assembly and upper bearing through the top of the cylinder block.

HINT:

- Keep the bearing, connecting rod and cap together.
- Arrange the piston and connecting rod assemblies in the correct order.

4. REMOVE CONNECTING ROD BEARING

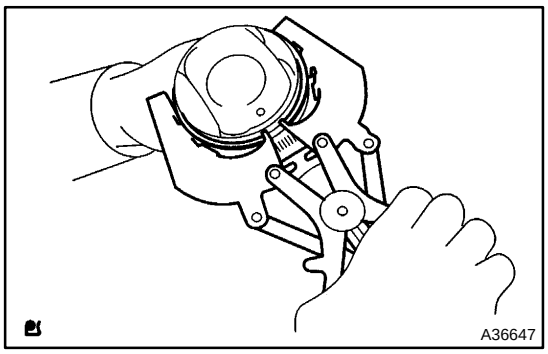

5. REMOVE PISTON RING SET

(a) Using a piston ring expander, remove the 2 compression rings.

(b) Remove the 2 side rails and oil ring by hand.

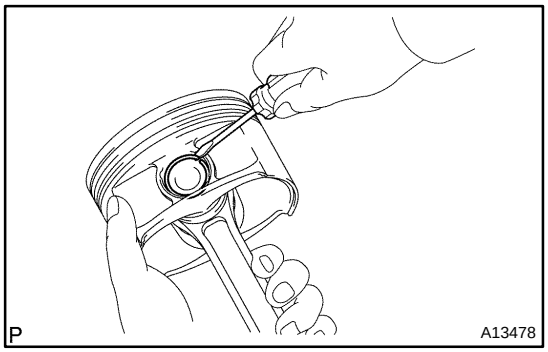

6. REMOVE PISTON PIN HOLE SNAP RING

(a) Using a small screwdriver, pry out the 2 snap rings.

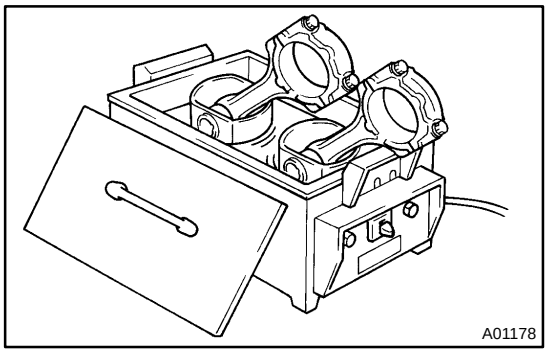

7. REMOVE PISTON

(a) Gradually heat the piston to 80 – 90 °C (176 – 194 °F).

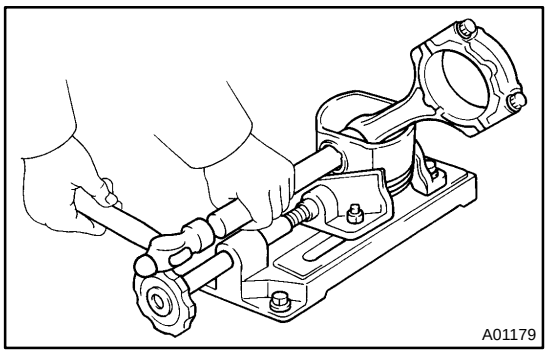

(b) Using a plastic–faced hammer and brass bar, lightly tap out the piston pin and remove the connecting rod.

HINT:

- The piston and pin are a matched set.
- Arrange the pistons, pins, rings, connecting rods and bearings in the correct order.

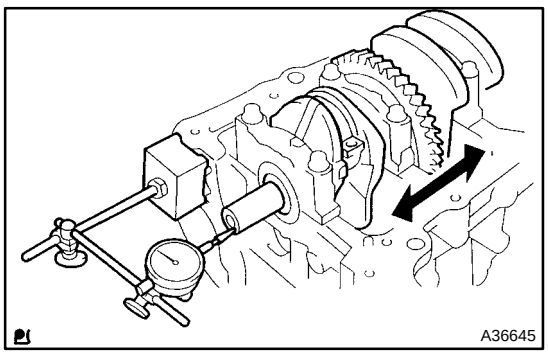

8. INSPECT CRANKSHAFT THRUST CLEARANCE

(a) Using a dial indicator, measure the thrust clearance while prying the crankshaft back and forth with a screwdriver.
Standard thrust clearance:
0.040 – 0.240 mm (0.0016 – 0.0094 in.)
Maximum thrust clearance: 0.30 mm (0.0118 in.)

(b) If the thrust clearance is greater than maximum, replace the thrust washers as a set.
Thrust washer thickness:
1.930 – 1.980 mm (0.0760 – 0.0780 in.)

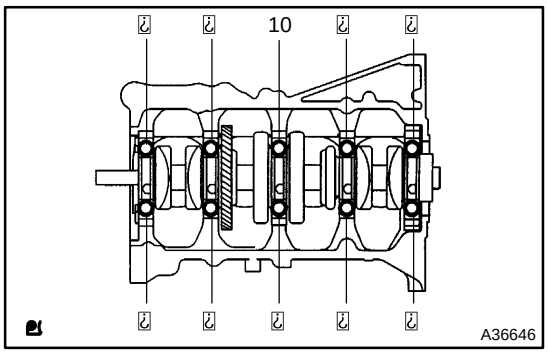

9. REMOVE CRANKSHAFT

(a) Uniformly loosen and remove the 10 bearing cap sub–assembly bolts, in several passes, in the sequence shown.
(b) Remove the bearing cap and crankshaft.

10. REMOVE CRANKSHAFT THRUST WASHER UPPER

11. REMOVE CRANKSHAFT BEARING

NOTICE:
Arrange the bearings in the correct order.
12. REMOVE CRANKSHAFT BEARING NO.2

NOTICE:
Arrange the main bearings and thrust washers in the correct order.
13. REMOVE STUD BOLT

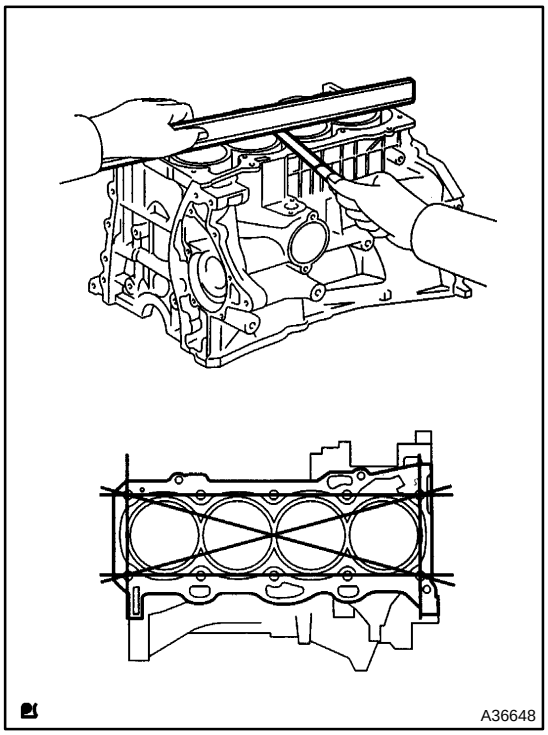

14. INSPECT CYLINDER BLOCK FOR FLATNESS

(a) Using a precision straight edge and feeler gauge, measure the surface contacting the cylinder head gasket for warpage.
Maximum warpage: 0.05 mm (0.0020 in.)

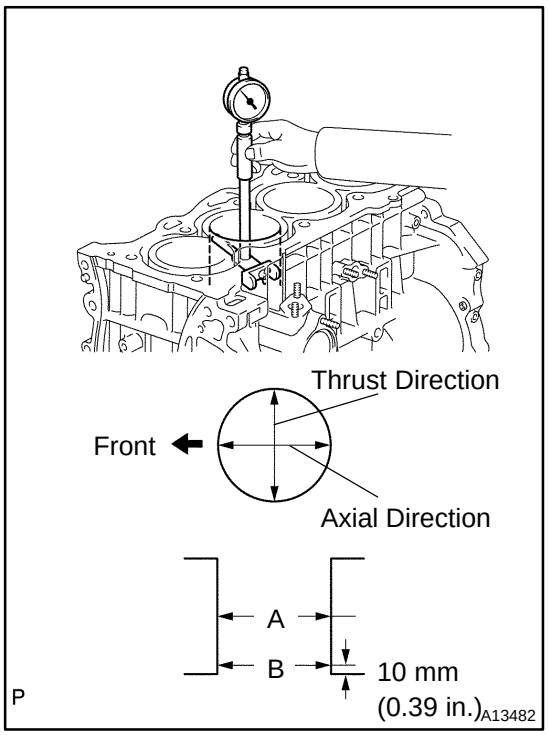

15. INSPECT CYLINDER BORE

(a) Using a cylinder gauge, measure the cylinder bore diameter at positions A and B in the thrust and axial directions.
Standard diameter:
88.500 – 88.513 mm (3.4843 – 3.4848 in.)

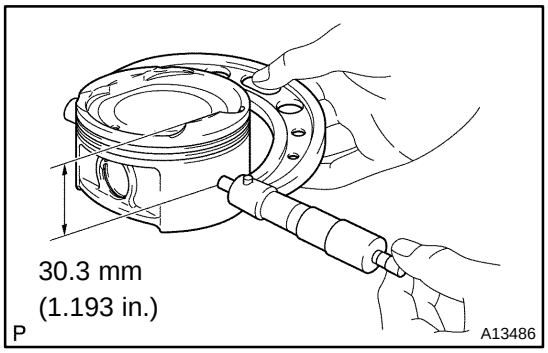

16. INSPECT PISTON DIAMETER

(a) Using a micrometer, measure the piston diameter at right angles to the piston pin center line, 30.3 mm (1.193 in.) from the piston head.
Piston diameter:
88.439 – 88.449 mm (3.4818 – 3.4822 in.)

17. INSPECT PISTON CLEARANCE

(a) Subtract the piston diameter measurement from the cylinder bore diameter measurement.
Standard oil clearance: 0.051 – 0.074 mm (0.0020 – 0.0029 in.)
Maximum oil clearance: 0.1 mm (0.0039 in.)

(b) If the clearance is greater than maximum, replace all the 4 pistons. If necessary, replace the cylinder block.

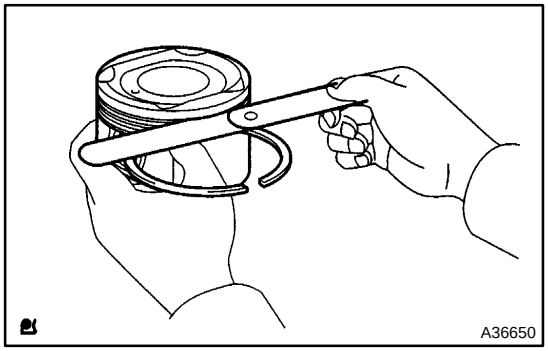

18. INSPECT RING GROOVE CLEARANCE

(a) Using a feeler gauge, measure the clearance between the piston ring and the wall of the ring groove.
Ring groove clearance:
0.030 – 0.070 mm (0.0012 – 0.0028 in.)

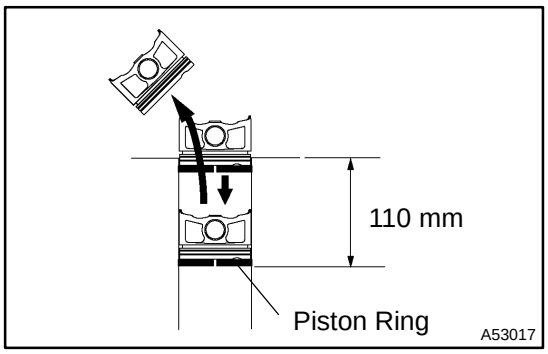

19. INSPECT PISTON RING END GAP

(a) Using a piston, push the piston ring a little beyond the bottom of the ring travel, 110 mm (4.33 in.) from the top of the cylinder block.

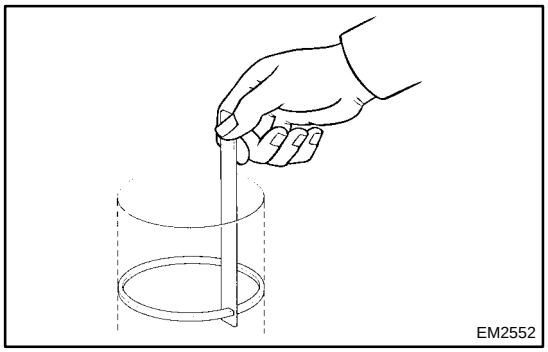

(b) Using a feeler gauge, measure the end gap.

Standard end gap:
No. 1 0.22 – 0.32 mm (0.0087 – 0.0126 in.)
No. 2 0.50 – 0.60 mm (0.0197 – 0.0236 in.)
Oil (side rail) 0.10 – 0.35 mm (0.0039 – 0.0138 in.)
Maximum end gap:
No. 1 0.89 mm (0.0350 in.)
No. 2 1.35 mm (0.0531 in.)
Oil (side rail) 0.73 mm (0.0287 in.)

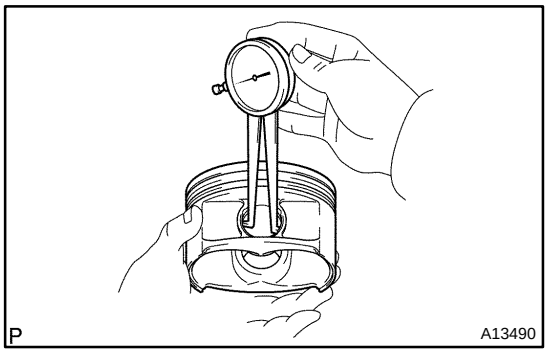

20. INSPECT PISTON PIN OIL CLEARANCE

(a) Using a caliper gauge, measure the inside diameter of the piston bushing.

Bushing inside diameter:
22.001 – 22.010 mm (0.8662 – 0.8665 in.)

HINT:

Bushing inside diameter

Mark	mm (in.)
A	22.001 – 22.004 (0.8662 – 0.8663)
B	22.114 – 22.007 (0.8663 – 0.8664)
C	22.007 – 22.010 (0.8664 – 0.8665)

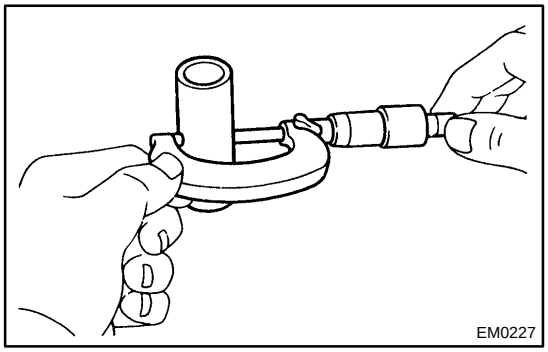

(b) Using a micrometer, measure the piston pin diameter.

Piston pin diameter:
21.997 – 22.009 mm (0.8660 – 0.8665 in.)

HINT:

Piston pin diameter

Mark	mm (in.)
A	21.997 – 22.000 (0.8660 – 0.8661)
B	22.000 – 22.003 (0.8661 – 0.8663)
C	22.003 – 22.006 (0.8663 – 0.8664)
D	22.006 – 22.009 (0.8664 – 0.8665)

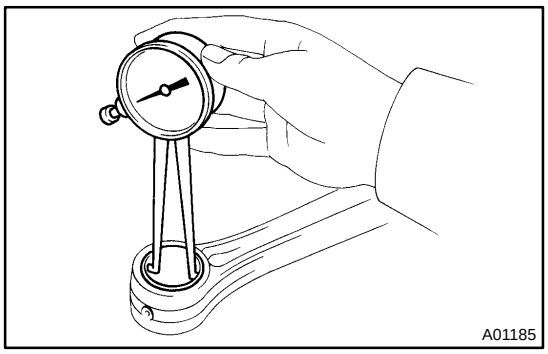

(c) Using a caliper gauge, measure the inside diameter of the connecting rod bushing.
Bushing inside diameter:
22.005 – 22.014 mm (0.8663 – 0.8667 in.)

HINT:

Bushing inside diameter

Mark	mm (in.)
A	22.005 – 22.008 (0.8663 – 0.8665)
B	22.008 – 22.011 (0.8665 – 0.8666)
C	22.011 – 22.014 (0.8666 – 0.8667)

(d) Subtract the piston pin diameter measurement from the piton pin hole diameter measurement.
Standard oil clearance:
0.001 – 0.007 mm (0.00004 – 0.00028 in.)
Maximum oil clearance: 0.010 mm (0.0020 in.)

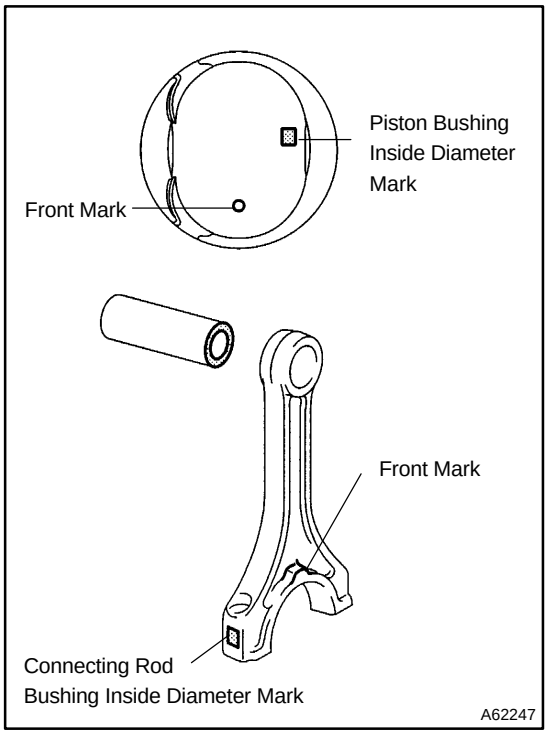

(e) If the oil clearance is greater than maximum, replace the connecting rod. If necessary, replace the piston and piston pin as a set.

(f) Subtract the piston pin diameter measurement form the bushing inside diameter measurement.
Standard oil clearance:
0.005 – 0.011 mm (0.0002 – 0.0004 in.)
Maximum oil clearance: 0.010 mm (0.0020 in.)

(g) If the oil clearance is greater than maximum, replace the connecting rod. If necessary, replace the connecting rod and piston pin as a set.

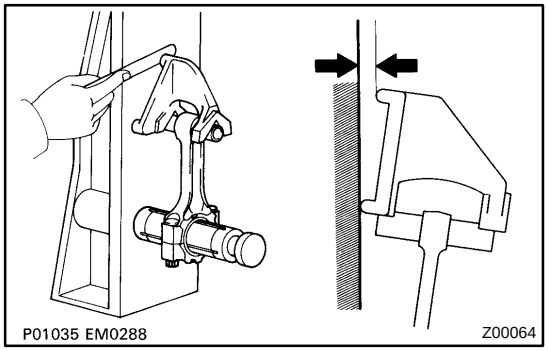

21. INSPECT CONNECTING ROD SUB–ASSY

(a) Using a rod aligner and feeler gauge, check the connecting rod alignment.
(1) Check for out–of–alignment.
Maximum out–of–alignment:
0.05 mm (0.0020 in.) per 100 mm (3.94 in.)

(b) If out–of alignment is greater than maximum, replace the connecting rod assembly.

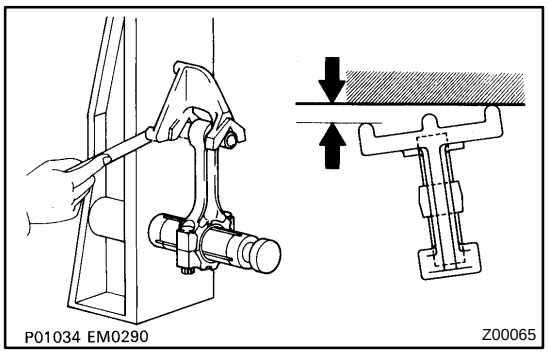

(1) Check for twist.
Maximum twist:
0.15 mm (0.0059 in.) per 100 mm (3.94 in.)

(c) If twist is greater than maximum, replace the connecting rod assembly.

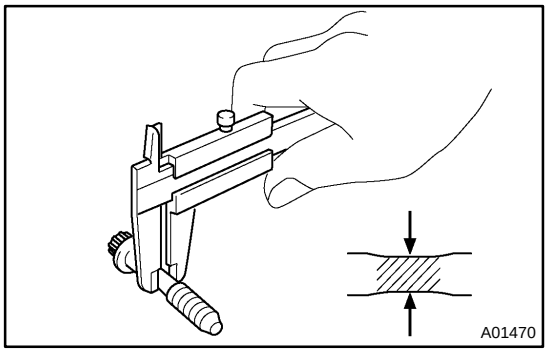

22. INSPECT CONNECTING ROD BOLT

(a) Using a vernier calipers, measure the tension portion diameter of the bolt.
Standard diameter: 7.2 – 7.3 mm (0.283 – 0.287 in.)
Minimum diameter: 7.0 mm (0.276 in.)

(b) If the diameter is less than minimum, replace the bolt.

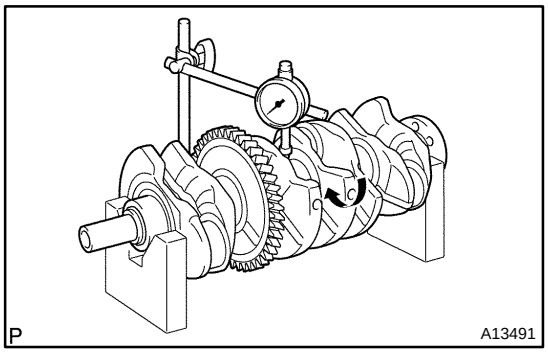

23. INSPECT CRANKSHAFT

(a) Using a dial indicator and V–blocks, measure the circle runout, as shown in the illustration.
Maximum circle runout: 0.03 mm (0.0012 in.)

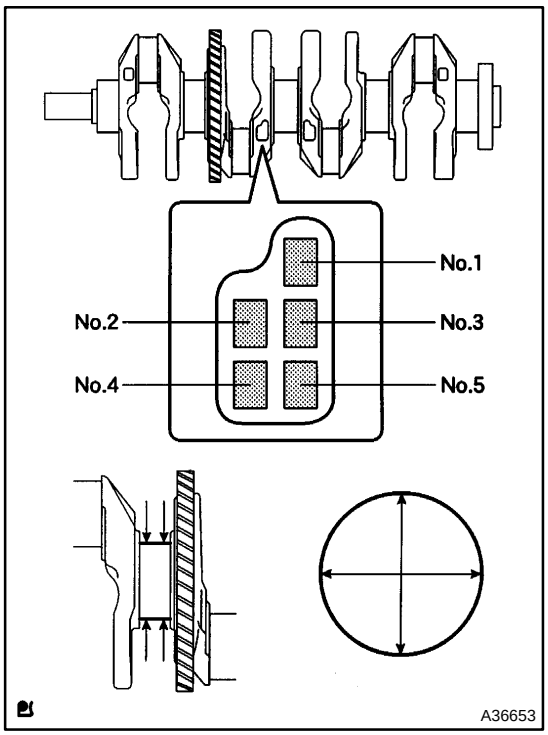

(b) Using a micrometer, measure the diameter of each main journal.
Diameter: 54.988 – 55.000 (2.1648 – 2.06535 in.)

(c) Check each main journal for taper and out–of–round as shown.
Maximum taper and out –of– round:
0.003 mm (0.0001 in.)

HINT:

Mark	mm (in.)
0	54.998 – 55.000 (2.16528 – 2.16535)
1	54.996 – 54.998 (2.16520 – 2.16528)
2	54.994 – 54.996 (2.16512 – 2.16520)
3	54.992 – 54.994 (2.16504 – 2.16512)
4	54.990 – 54.992 (2.16496 – 2.16504)
5	54.988 – 54.990 (2.16490 – 2.16496)

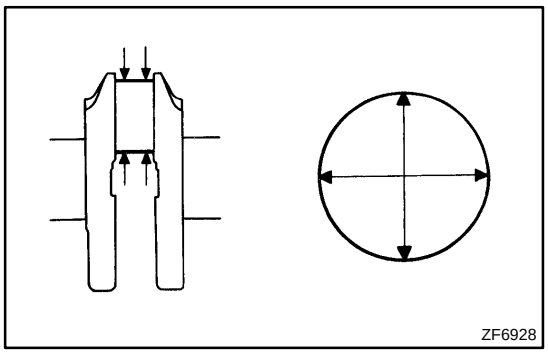

(d) Using a micrometer, measure the diameter of each crank pin.
Diameter: 47.990 – 48.000 mm (1.8894 – 1.8898 in.)

(e) Check each crank pin for taper and out–of–round as shown.
Maximum taper and out–of–round:
0.003 mm (0.0001 in.)

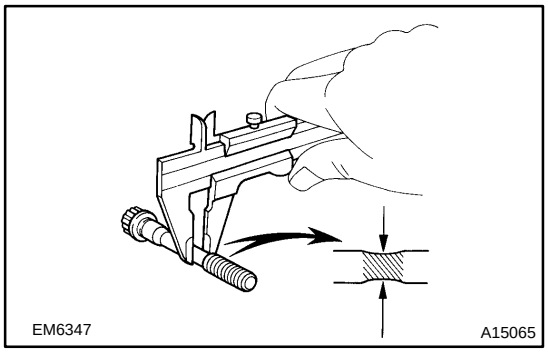

24. INSPECT CRANKSHAFT BEARING CAP SET BOLT

(a) Using vernier calipers, measure the tension portion diameter of the bolt.
Standard diameter: 7.5 – 7.6 mm (0.295 – 0.299 in.)
Minimum diameter: 7.2 mm (0.283 in.)

If the diameter is less than minimum, replace the bolt.

25. INSTALL RING PIN

(a) Using a plastic–faced hammer, tap into the ring pin.
Standard protrusion:
Ring pin A 6 mm (0.236 in.)
Ring pin B 5 mm (0.197 in.)

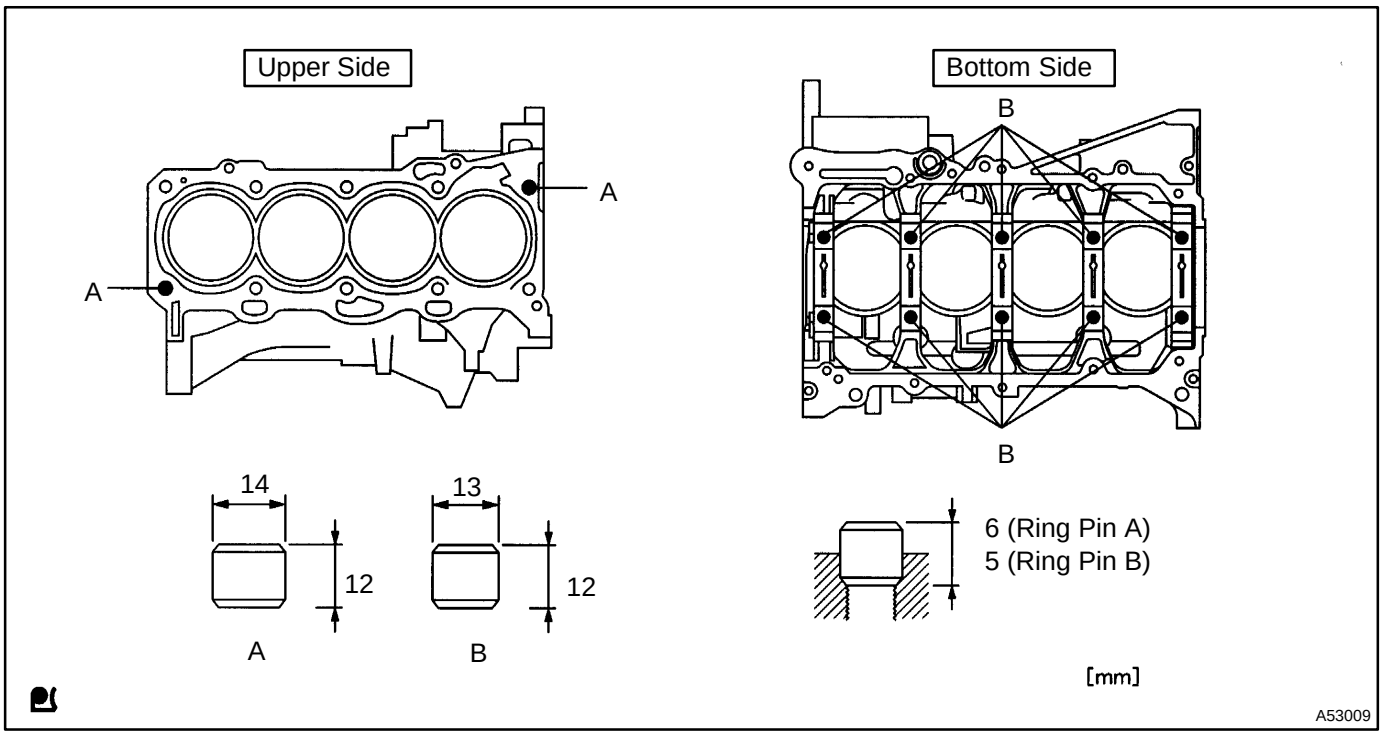

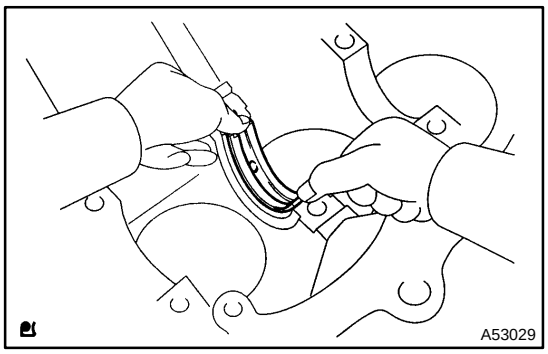

26. INSPECT CRANKSHAFT OIL CLEARANCE

NOTICE:

- **Clean the backside of the bearing and the bearing surface of the bearing cap and let not stick the oils and fats.**
- **The bearing cap bolts are tightened in 2 progressive steps.**

(a) Clean each main journal and bearing.

(b) Install the upper bearing with an oil groove on cylinder block.

(c) Install the lower bearing on the bearing cap sub assembly.

(d) Place the crankshaft on the cylinder block.

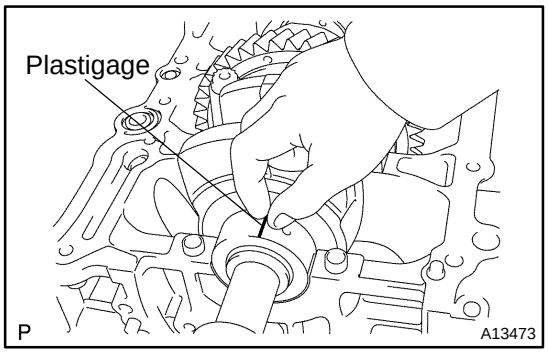

(e) Lay a strip of plastigage across each journal.

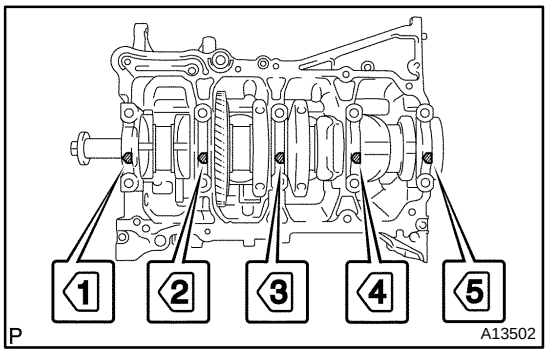

(f) Examine the front marks and install the bearing caps on the cylinder block.

(g) Apply a light coat of engine oil on the threads and under the bearing cap bolts.

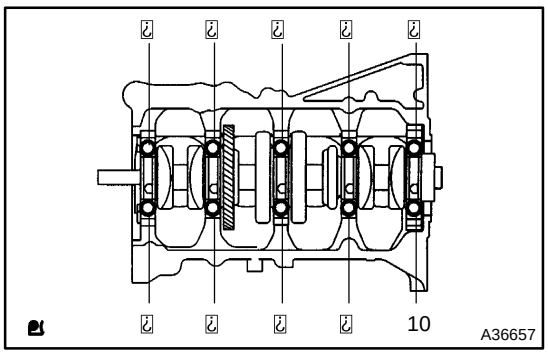

(h) Tighten the bolts in several passes, in the sequence shown, by the specified torque.
Torque: 20 N·m (204 kgf·cm, 15 ft·lbf)

(i) Retighten the bolts in several passes, in the sequence shown, by the specified torque.
Torque: 40 N·m (408 kgf·cm, 29 ft·lbf)

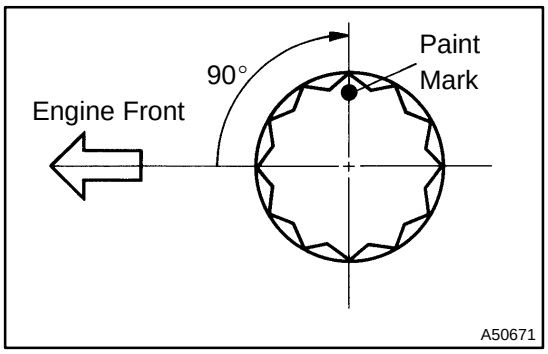

(j) Mark the front of the bearing cap bolts with paint.
(k) Retighten the bearing cap bolts by 90° in the numerical order shown.
(l) Check that the painted mark is now at a 90° angle to the front.

NOTICE:
Do not turn the crankshaft.

(m) Remove the bearing cap.

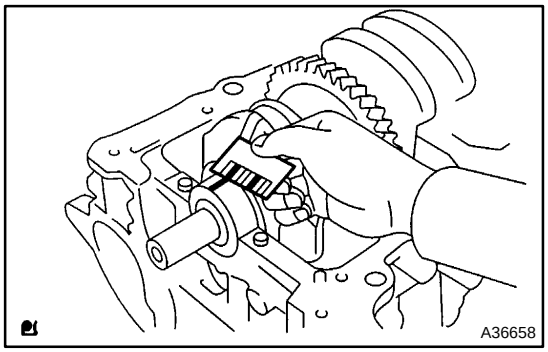

(n) Measure the plastigage at its widest point.
Standard oil clearance:
0.017 – 0.040 mm (0.0007 – 0.0016 in.)
Maximum oil clearance: 0.07 mm (0.0028 in.)

NOTICE:
Completely remove the plastigage.

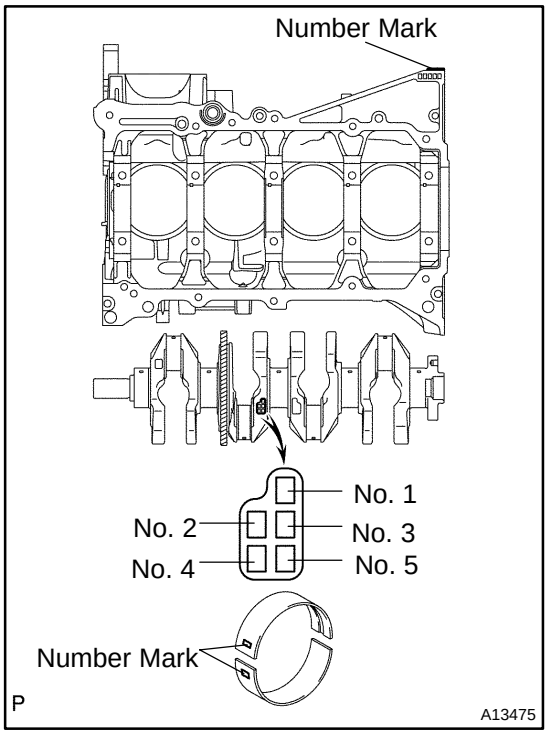

(o) If using a standard bearing, replace it with one having the same number. If the number of the bearing cannot be determined, select the correct bearing by adding together the numbers imprinted on the cylinder block and crankshaft, then selecting the bearing with the same number as the total. There are 4 sizes of standard bearings, marked "1", "2", "3" and "4" accordingly.

Cylinder block (A) + Crankshaft (B)	0 – 2	3 – 5	6 – 8	9 – 11
Use bearing	"1"	"2"	"3"	"4"

HINT:
EXAMPLE
Cylinder block "4" (A) + Crankshaft "3" (B) =
Total number 7 (Use bearing "3")

Reference:

Item	Mark	mm (in.)
Cylinder block main journal bore diameter (A)	0	59.000 – 59.002 (2.08683 – 2.32291)
	1	59.003 – 59.004 (2.08694 – 2.32299)
	2	59.005 – 59.006 (2.08701 – 2.32307)
	3	59.007 – 59.009 (2.08708 – 2.32318)
	4	59.010 – 59.011 (2.08718 – 2.32326)
	5	59.012 – 59.013 (2.08725 – 2.32334)
	6	59.014 – 59.016 (2.08733 – 2.32346)
Crankshaft main journal diameter (B)	0	54.998 – 55.000 (1.94528 – 2.16535)
	1	54.996 – 54.998 (1.94521 – 2.16527)
	2	54.994 – 54.996 (1.94514 – 2.16519)
	3	54.992 – 54.994 (1.94507 – 2.16511)
	4	54.990 – 54.992 (1.94500 – 2.16504)
	5	54.988 – 54.990 (1.94493 – 2.16496)
Standard bearing center wall thickness	1	1.993 – 1.996 (0.07846 – 0.07858)
	2	1.996 – 1.999 (0.07858 – 0.07870)
	3	1.999 – 2.002 (0.07870 – 0.07882)
	4	2.002 – 2.005 (0.07882 – 0.07894)

27. INSTALL TIGHT PLUG

(a) Apply adhesive around tight plugs.
Adhesive: Part No. 08833–00070, THREE BOND 1324 or equivalent.

(b) Using SST, into the tight plugs as shown in the illustration.
SST 09950–60010 (09951–00200), 09950–70010 (09951–07100)
Standard depth:
Engine front 1.7 – 2.7 mm (0.067 – 0.106 in.)
Engine rear 2.2 – 3.2 mm (0.087 – 0.126 in.)

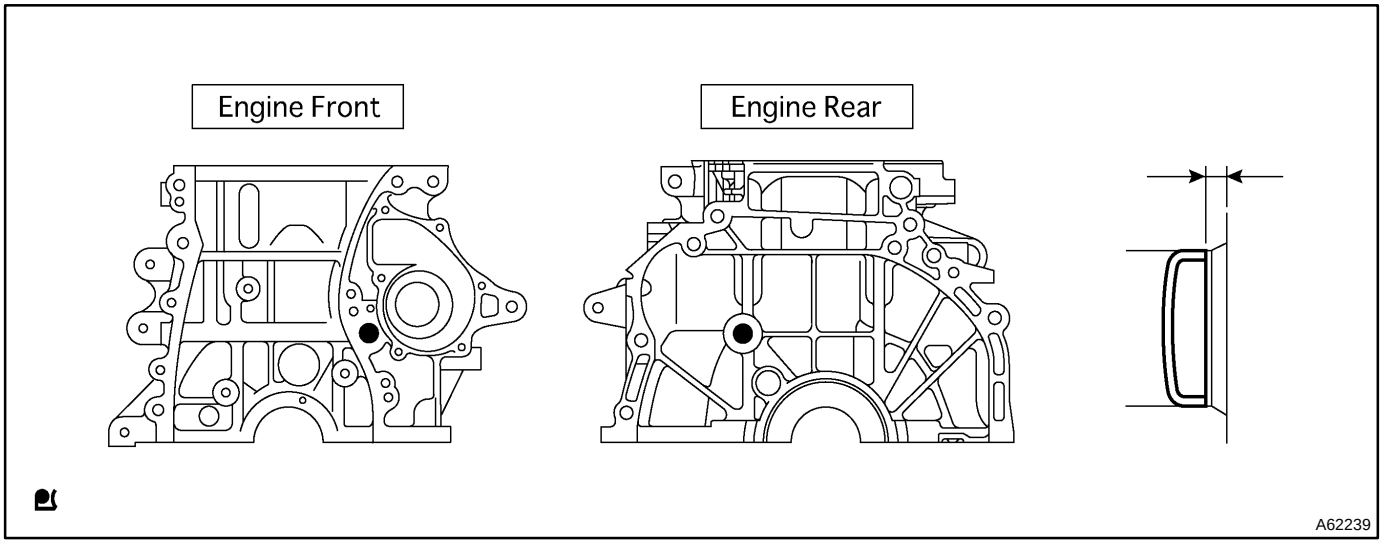

28. INSTALL STUD BOLT

(a) Install the stud bolts as shown in the illustration.

Torque:

Stud bolt A 5.0 N·m (51 kgf·cm, 44 in.·lbf)

Stud bolt B 10N·m (97 kgf·cm, 84 in.·lbf)

Stud bolt C 5.0N·m (51 kgf·cm, 44 in.·lbf)

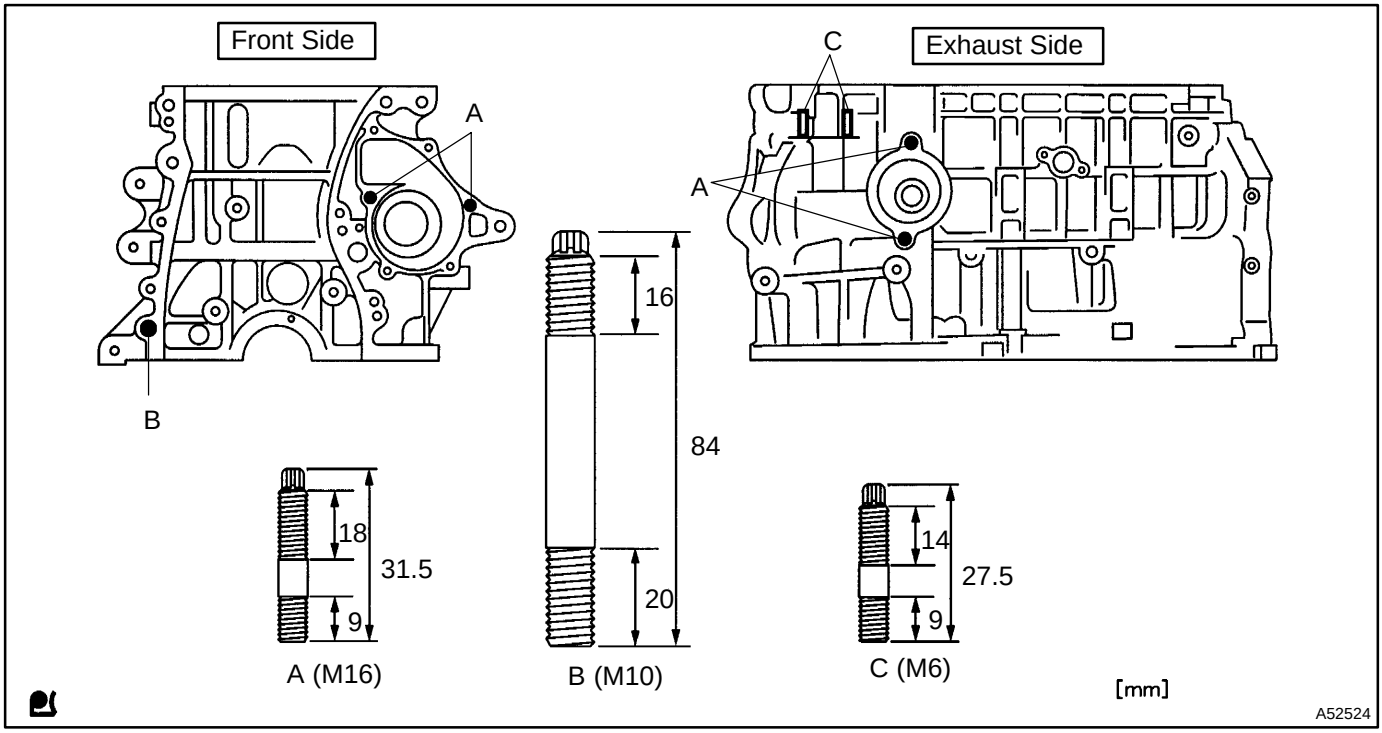

29. INSTALL STRAIGHT PIN

(a) Using a plastic–faced hammer, tap into the straight pin.

Standard protrusion

Pin A 7.5 mm (0.295 in.)

Pin B 12 mm (0.472 in.)

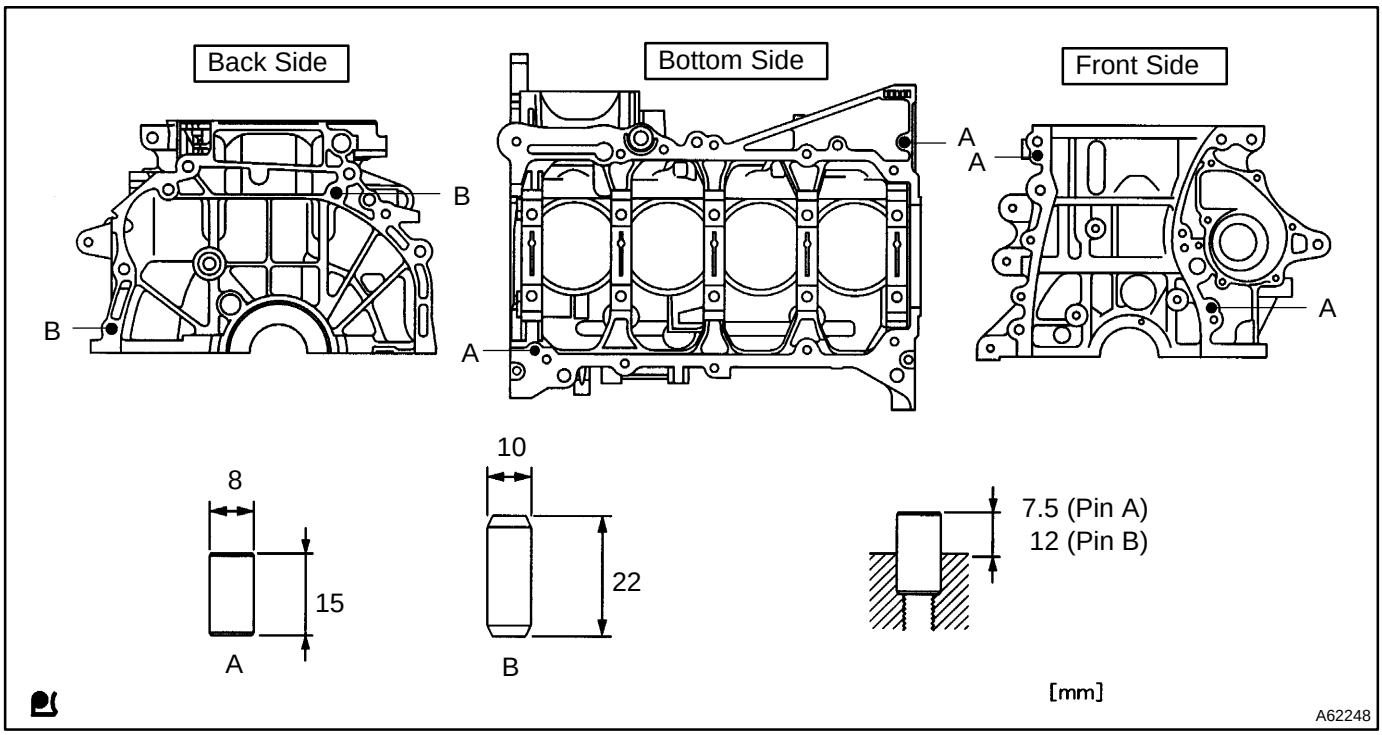

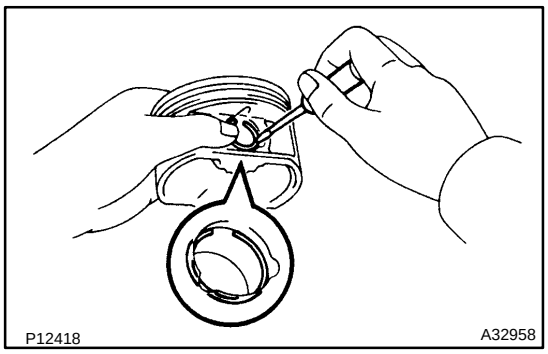

30. INSTALL PISTON

(a) Using a small screwdriver, install a new snap ring at one end of the piston pin hole.
(b) Gradually hat the piston to 80 – 90°C (176 – 194°F).

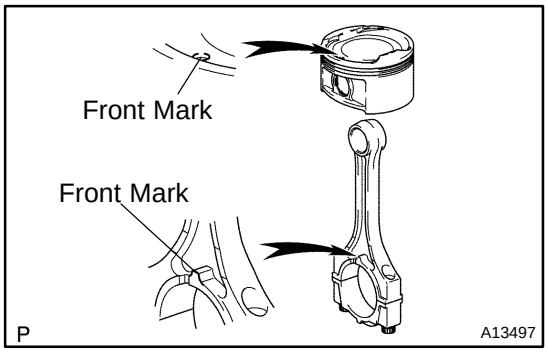

(c) Align the front marks on the piston with connecting rod, and push in the piston with your thumb.
(d) Using a small screwdriver, install a new snap ring on the other end of the piston pin hole.

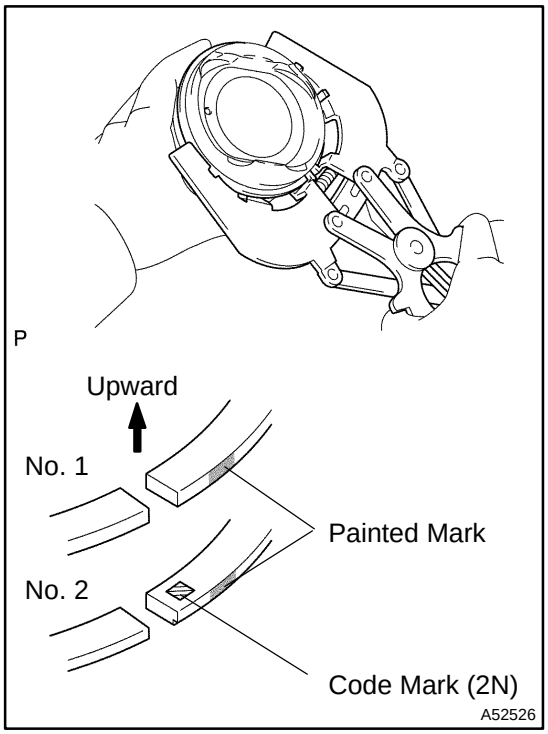

31. INSTALL PISTON RING SET

(a) Install the oil ring expander and 2 side rails by hand.
(b) Using a piston ring expander, install the 2 compression rings with the point mark facing right side.

NOTICE:
Install the compression ring No. 2 with the code mark (2N) facing upward.

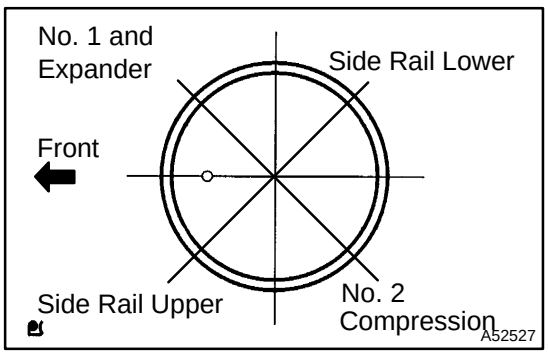

(c) Position the piston rings so that the ring ends are as shown.

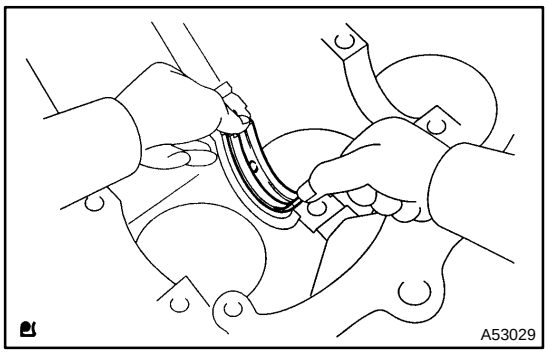

32. INSTALL CRANKSHAFT BEARING

(a) Install the upper bearing with an oil groove on cylinder block.

NOTICE:

Clean the back side of the bearing and the bearing surface of the cylinder block and let not stick the oils and fats.

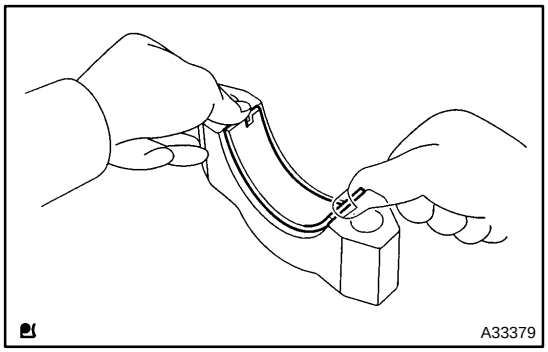

33. INSTALL CRANKSHAFT BEARING NO.2

(a) Install the lower bearing on bearing cap.

NOTICE:

Clean the back side of the bearing and the bearing surface of the bearing cap and let not stick the oils and fats.

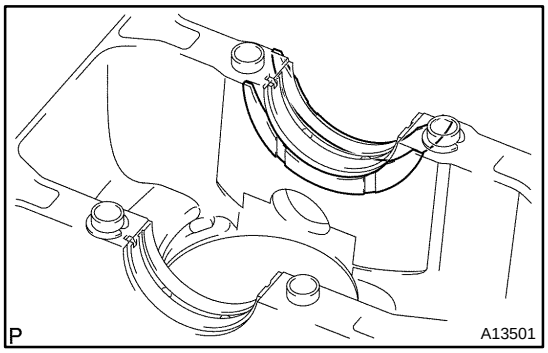

34. INSTALL CRANKSHAFT THRUST WASHER UPPER

(a) Install the 2 thrust washers under the No. 3 journal position of the cylinder block with the oil grooves facing outward.

35. INSTALL CRANKSHAFT

(a) Apply engine oil to upper bearing and install the crankshaft on the cylinder block.
(b) Apply engine oil to lower bearing.
(c) Examine the front marks and install the bearing caps on the cylinder block.
(d) Apply a light coat of engine oil on the threads and under the bearing cap bolts.

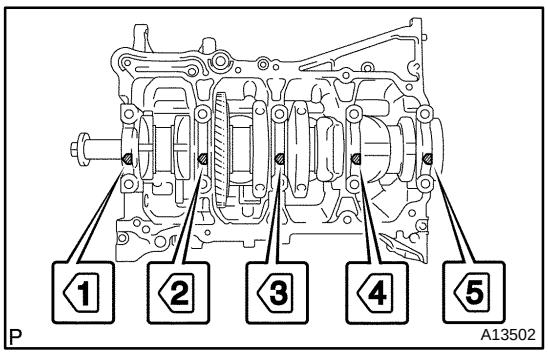

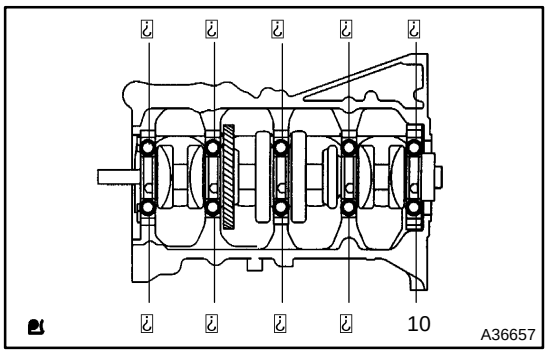

(e) Tighten the blots in several passes, in the sequence shown, by the specified torque.
Torque: 20 N·m (204 kgf·cm, 15 ft·lbf)
(f) Tighten the bolts in several passes, in the sequence shown, by the specified torque.
Torque: 40 N·m (408 kgf·cm, 29 ft·lbf)

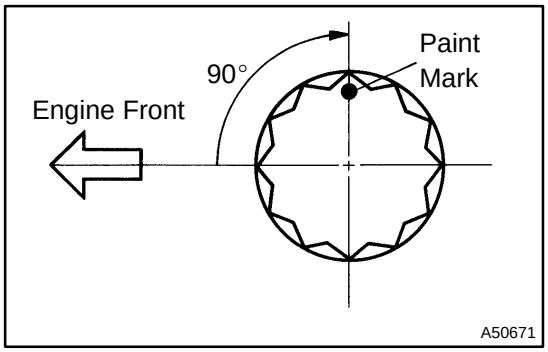

(g) Mark the front of the bearing cap bolts with paint.
(h) Retighten the bearing cap bolts by 90° in the numerical order shown.
(i) Check that the painted mark is now at a 90° angle to the front.
(j) Check the crankshaft turns smoothly.

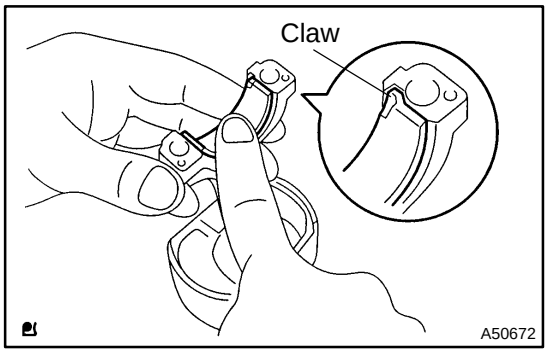

36. INSTALL CONNECTING ROD BEARING

(a) Align the bearing claw with the groove of the connecting rod or connecting cap.

NOTICE:
Clean the back side of the bearing and the bearing surface of the bearing cap and let not stick the oils and fats.

37. INSTALL PISTON

NOTICE:
The connecting rod cap bolts are tightened in 2 progressive steps.
(a) Apply engine oil to the cylinder walls, the pistons, and the surfaces of connecting rod bearings.
(b) Check the position of the piston ring ends.

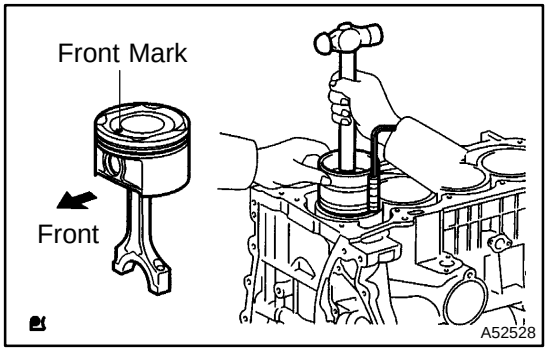

(c) Using a piston ring compressor, push the correctly numbered piston and connecting rod assemblies into each cylinder with the front mark of the piston facing forward.

NOTICE:
Match the numbered connecting rod cap with the connecting rod.

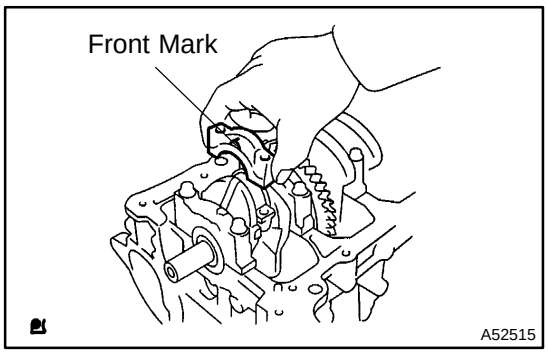

(d) Check that the protrusion of the connecting rod cap is facing in the correct direction.
(e) Apply a light coat of engine oil on the threads and under the heads of the connecting rod cap bolts.
(f) Using a 12 mm socket wrench, tighten the bolts in several passes by the specified torque.
Torque: 25 N·m (250 kgf·cm, 18 ft·lbf)
(g) Mark the front of the connecting cap blots with paint.

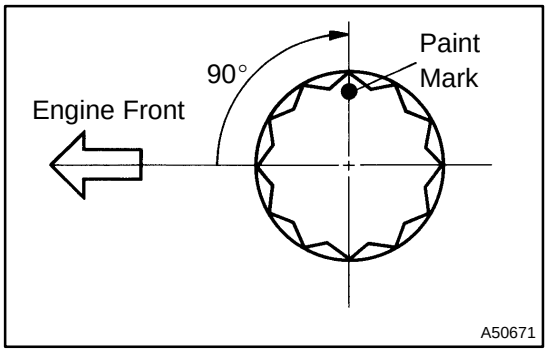

(h) Retighten the cap bolts by 90° as shown in the illustration.
(i) Check that the crankshaft turns smoothly.

EXHAUST PIPE (2AZ–FE)

15031–01

COMPONENTS

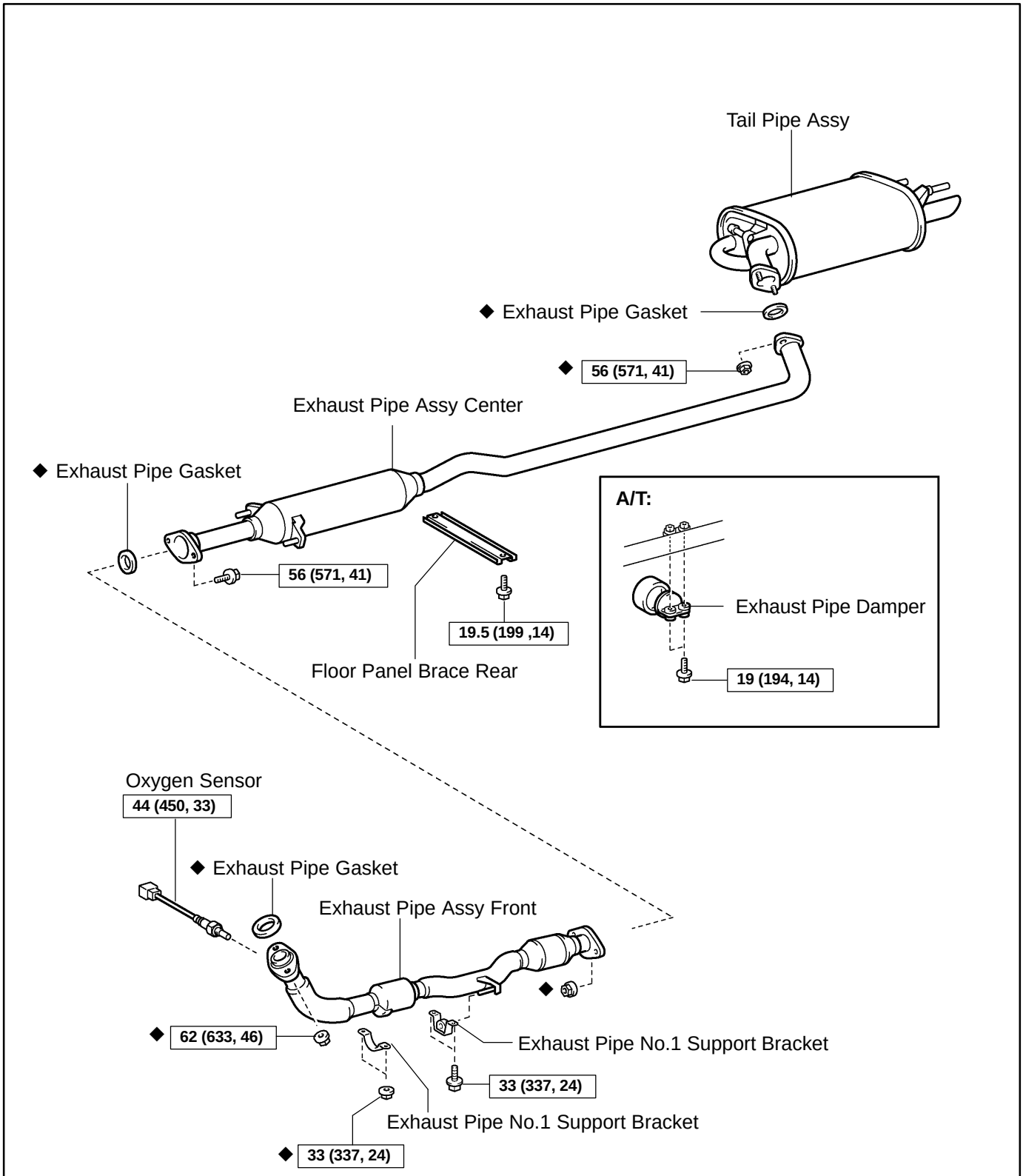

1500J–02

Removal & Installation and Disassembly & Reassembly

1. REMOVE OXYGEN SENSOR

(a) Disconnect the oxygen sensor connecter.
(b) Remove the oxygen sensor.

2. REMOVE EXHAUST PIPE NO.1 SUPPORT BRACKET

(a) Remove the 2 nuts and support bracket.

3. REMOVE EXHAUST PIPE NO.1 SUPPORT BRACKET

(a) Remove the 2 bolts and support bracket.

4. REMOVE EXHAUST PIPE ASSY FRONT

5. REMOVE FLOOR PANEL BRACE REAR

(a) Remove the 2 bolts and floor panel brace rear.

6. REMOVE EXHAUST PIPE ASSY CENTER

7. REMOVE EXHAUST PIPE DAMPER(A/T TRANSAXLE)

8. REMOVE TAIL PIPE ASSY

9. INSTALL TAIL PIPE ASSY

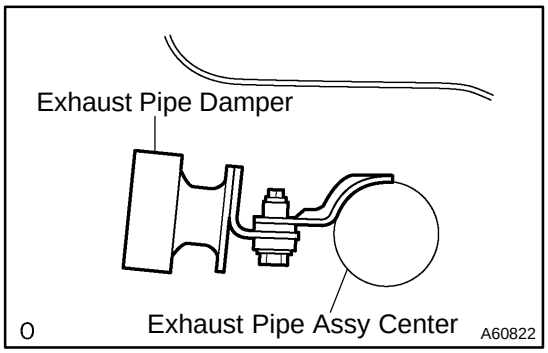

10. INSTALL EXHAUST PIPE DAMPER(A/T TRANSAXLE)

(a) Install the exhaust pipe damper with the 2 bolts.
Torque: 19 N·m (194 kgf·cm, 14 ft·lbf)

HINT:
Be careful not to install the damper in the wrong direction.

11. INSTALL EXHAUST PIPE ASSY CENTER

(a) Install a new gasket and the center pipe to the tail pipe.
Torque: 56 N·m (571 kgf·cm, 41 ft·lbf)

12. INSTALL FLOOR PANEL BRACE REAR

Torque: 19.5 N·m (199 kgf·cm ,14 ft·lbf)

13. INSTALL EXHAUST PIPE ASSY FRONT

(a) Install a new gasket, install front pipe to center pipe.
Torque: 56 N·m (571 kgf·cm, 41 ft·lbf)
(b) Install a new gasket and the front pipe to exhaust manifold converter.
Torque: 62 N·m (633 kgf·cm, 46 ft·lbf)

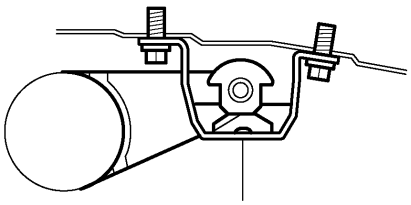

14. INSTALL EXHAUST PIPE NO.1 SUPPORT BRACKET

(a) Install the exhaust pipe No. 1 support bracket with the 2 bolts.

Torque: 33 N·m (337 kgf·cm, 24 ft·lbf)

HINT:

Be careful not to install the damper in the wrong direction.

15. INSTALL EXHAUST PIPE NO.1 SUPPORT BRACKET

Torque: 33 N·m (337 kgf·cm, 24 ft·lbf)

16. INSTALL OXYGEN SENSOR

Torque: 44 N·m (450 kgf·cm, 33 ft·lbf)

17. CHECK EXHAUST GAS LEAK

EXHAUST PIPE (1MZ–FE)

COMPONENTS

1502Z–01

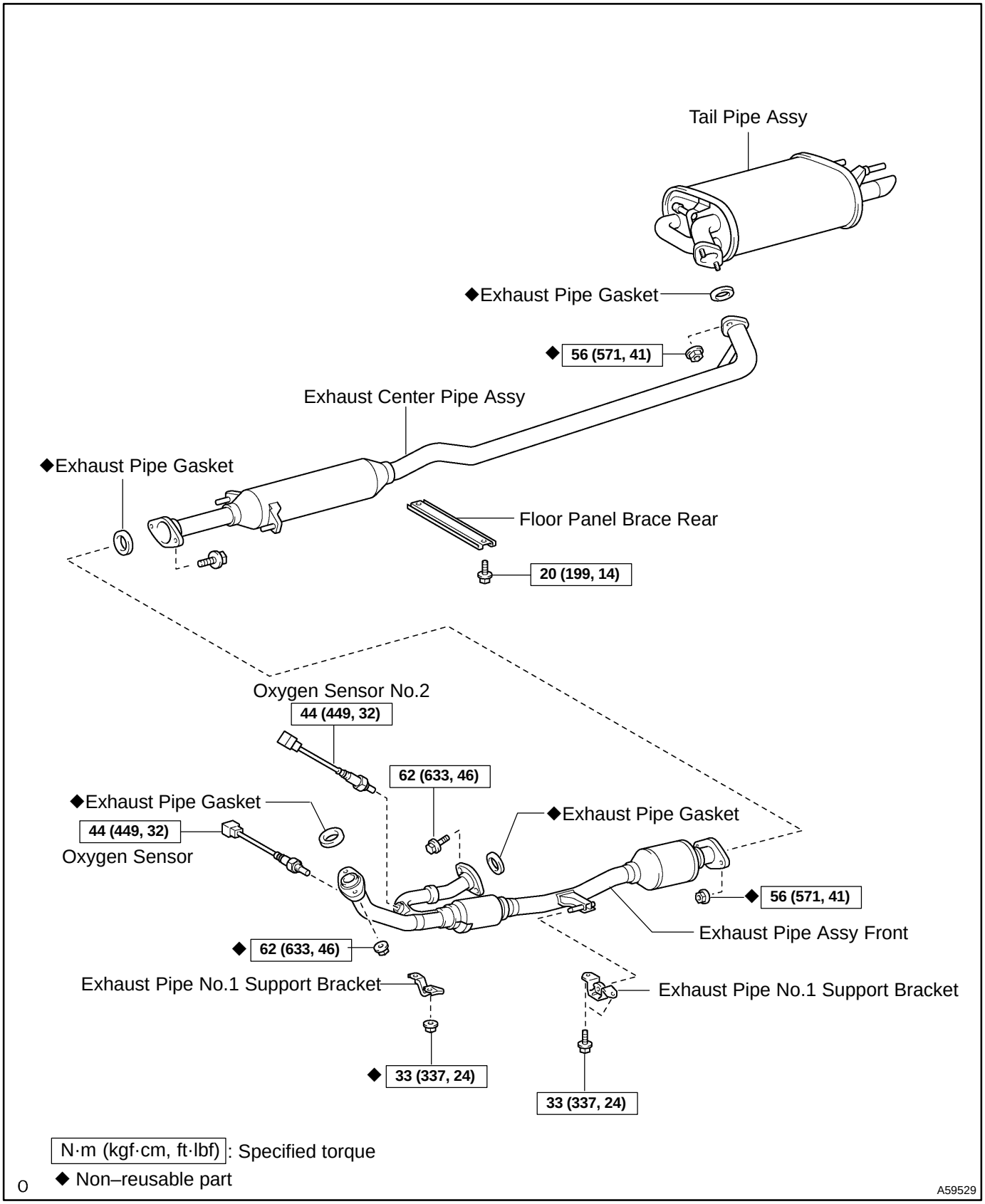

15030–01

Removal & Installation and Disassembly & Reassembly

1. REMOVE OXYGEN SENSOR

(a) Disconnect the oxygen sensor connector.
(b) Remove the oxygen sensor.

2. REMOVE OXYGEN NO.2 SENSOR

(a) Disconnect the oxygen sensor connector.
(b) Remove the oxygen sensor.

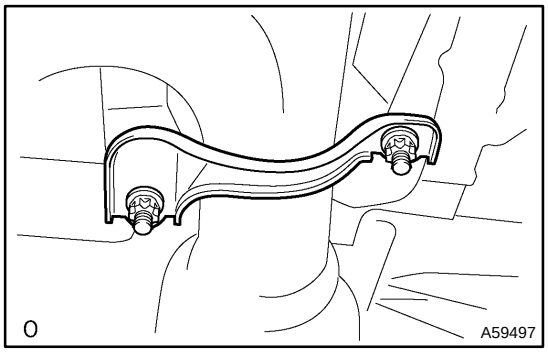

3. REMOVE EXHAUST PIPE NO.1 SUPPORT BRACKET

(a) Remove the 2 nuts and remove the support bracket.

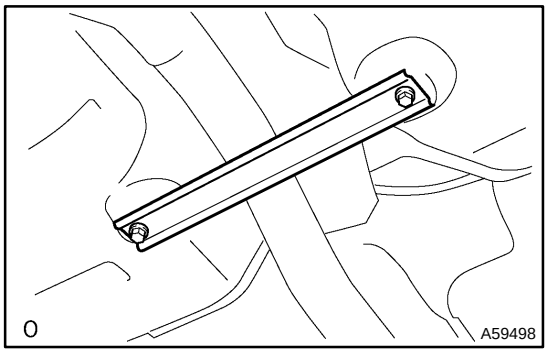

4. REMOVE FLOOR PANEL BRACE REAR

(a) Remove the 2 bolts and remove the floor panel brace rear.

5. REMOVE EXHAUST PIPE NO.1 SUPPORT BRACKET

6. REMOVE EXHAUST PIPE ASSY FRONT

7. REMOVE EXHAUST PIPE ASSY CENTER

8. REMOVE TAIL PIPE ASSY

9. INSTALL TAIL PIPE ASSY

10. INSTALL EXHAUST PIPE ASSY CENTER

(a) Install a new gasket and the center pipe to the tail pipe.
Torque: 56 N·m (571 kgf·cm, 41 ft·lbf)

11. INSTALL EXHAUST PIPE ASSY FRONT

(a) Install a new gasket and the front pipe to the exhaust manifold RH.
Torque: 62 N·m (633 kgf·cm, 46 ft·lbf)
(b) Install a new gasket and the front pipe to the exhaust manifold converter No.2.
Torque: 62 N·m (633 kgf·cm, 46 ft·lbf)
(c) Install a new gasket and the front pipe to the center pipe.
Torque: 56 N·m (571 kgf·cm, 41 ft·lbf)

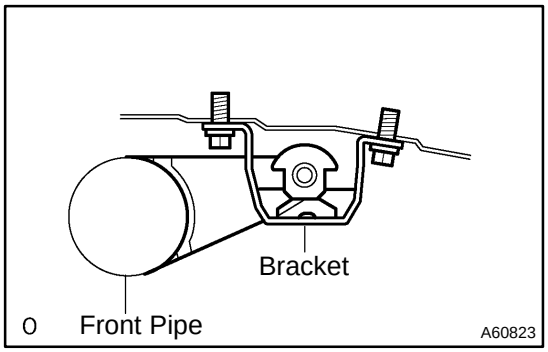

12. INSTALL EXHAUST PIPE NO.1 SUPPORT BRACKET

Torque: 33 N·m (337 kgf·cm, 24 ft·lbf)

HINT:
Be careful not to install the bracket in the wrong direction.

13. INSTALL FLOOR PANEL BRACE REAR

Torque: 20 N·m (199 kgf·cm, 14 ft·lbf)

14. INSTALL EXHAUST PIPE NO.1 SUPPORT BRACKET

Torque: 33 N·m (337 kgf·cm, 24 ft·lbf)

15. INSTALL OXYGEN SENSOR

Torque: 44 N·m (449 kgf·cm, 32 ft·lbf)

16. INSTALL OXYGEN NO.2 SENSOR

Torque: 44 N·m (449 kgf·cm, 32 ft·lbf)

17. CHECK EXHAUST GAS LEAK

COOLING SYSTEM (2AZ–FE)

1602Y–02

ON–VEHICLE INSPECTION

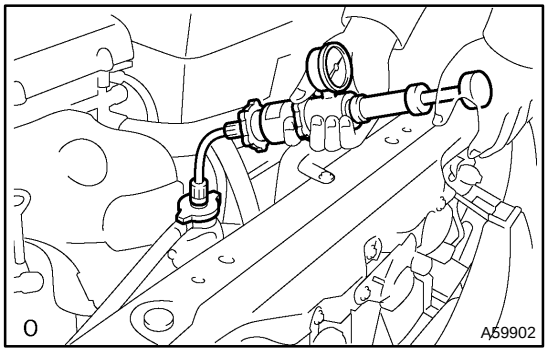

1. INSPECT COOLING SYSTEM FOR LEAKS

CAUTION:

To avoid the danger of being burned, do not remove the radiator cap while the engine and radiator are still hot, as fluid and steam can be blown out under pressure.

(a) Fill the radiator with coolant and attach a radiator cap tester.

(b) Warm up the engine.

(c) Pump it to 118 kPa (1.2 kgf/cm^2, 17.1 psi), and check that the pressure does not drop.

If the pressure drops, check to hoses, radiator or water pump for leaks. If no external leaks are found, check the heater core, cylinder block and head.

2. CHECK ENGINE COOLANT LEVEL AT RESERVOIR

(a) The engine coolant level should be between the ”LOW” and ”FULL” lines, when the engine is cold.

If low, check for leaks and add ”Toyota Long Life Coolant” or equivalent up to the ”FULL” line.

3. CHECK ENGINE COOLANT QUALITY

(a) Remove the radiator cap.

CAUTION:

To avoid the danger of being burned, do not remove the radiator cap while the engine and radiator are still hot, as fluid and steam can be blown out under pressure.

(b) Check if there is any excessive deposits of rust or scale around the radiator cap and radiator filler hole; the coolant should be free from oil.

HINT:

If excessively dirty, replace the coolant.

(c) Reinstall the radiator cap.

INSPECTION

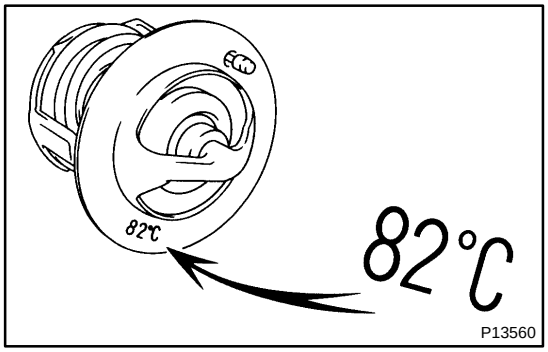

1. THERMOSTAT

HINT:
The thermostat is numbered with the valve opening temperature.

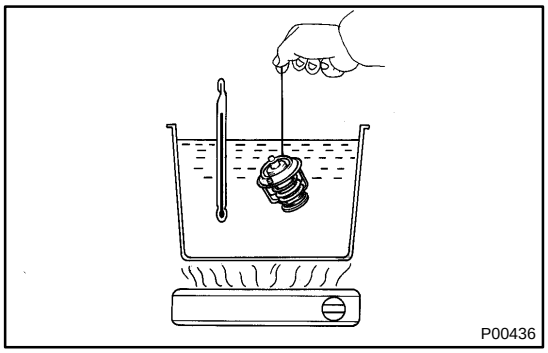

(a) Immerse the thermostat in water and gradually heat the water.
(b) Check the valve opening temperature.
Valve opening temperature:
80 – 84°C (176 – 183°F)

If the valve opening temperature is not as specified, replace the thermostat.

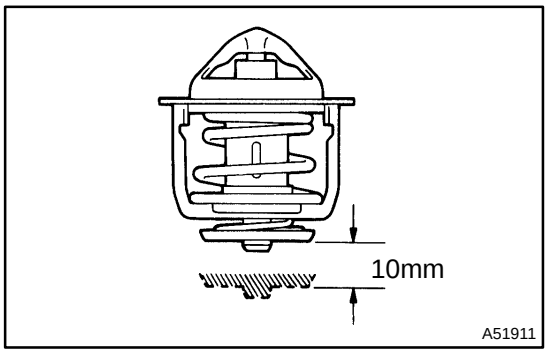

(c) Check the valve lift.
Valve lift: 10 mm (0.394 in.) or more at 95°C (203°F)

If the valve lift is not as specified, replace the thermostat.
(d) Check that the valve is fully closed when the thermostat is at low temperatures (below 77°C (171°F)).

If not closed, replace the thermostat.

2. RADIATOR CAP SUB–ASSY

NOTICE:

- **If the reservoir cap has contaminations, always rinse it with water.**
- **Before using a radiator cap tester, wet the relief valve and pressure valve with engine coolant or water.**

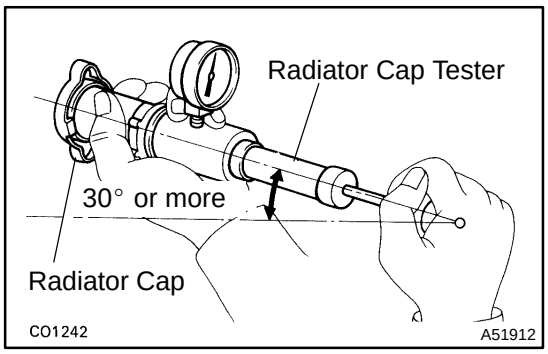

(a) Using a radiator cap tester, slowly pump the tester and check that air is coming from the vacuum valve.

Pump speed: 1 push / (3 seconds or more)

NOTICE:

Push the pump at a constant speed.

If air is not coming from the vacuum valve, replace the reservoir cap.

(b) Pump the tester and measure the relief valve opening pressure.

Pump speed: 1 push within 1 second

NOTICE:

This pump speed is for the first pump only (in order to close the vacuum valve). After this, the pump speed can be reduced.

Standard opening pressure:

93 – 122 kPa (0.95 – 1.25 kgf/cm^2, 13.4 – 17.6 psi)

Minimum opening pressure:

78 kPa (0.8 kgf/cm^2, 11.2 psi)

HINT:

Use the tester's maximum reading as the opening pressure.

If the opening pressure is less than minimum, replace the reservoir cap.

COOLING FAN SYSTEM (2AZ–FE)

16030–02

ON–VEHICLE INSPECTION

HINT:

It is normal that the cooling fan sometime rotates when the ignition switch is turned from ACC to ON.

1. CHECK COOLING FAN OPERATION WITH LOW TEMPERATURE (Below 83°C (181°F))

(a) Turn the ignition switch ON.

(b) Check that the cooling fan stops.

If not, check the cooling fan relay and water temperature sensor, and check for disconnection of connectors or wire break between the cooling fan relay and water temperature sensor.

(c) Disconnect the water temperature sensor connector.

(d) Check that the cooling fan rotates.

If not, check the fuses, cooling fan relay, engine ECU and cooling fan, and check for a short circuit between the cooling fan relay and water temperature sensor.

(e) Reconnect the water temperature sensor connector.

2. CHECK COOLING FAN OPERATION WITH HIGH TEMPERATURE (Above 98°C (208°F))

(a) Start the engine, and raise coolant temperature to above 98°C (208°F).

(b) Check that the cooling fan rotates.

If not, replace the water temperature sensor.

3. INSPECT COOLING FAN

(a) Disconnect the cooling fan connector.

(b) Connect battery and ammeter to the cooling fan connector.

(c) Check that the cooling fan rotates smoothly, and check the reading on the ammeter.

Standard amperage: 4.9 – 8.5 A at 20°C (68°F)

(d) Reconnect the cooling fan connector.

INSPECTION

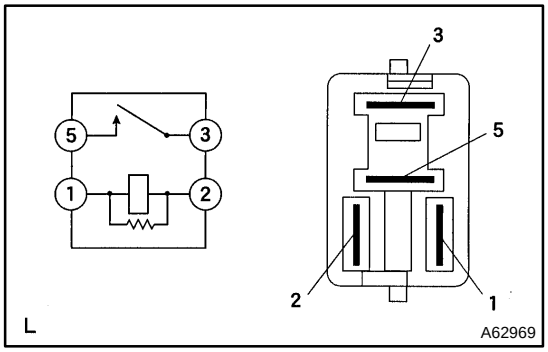

1. COOLING FAN RELAY
COOLING FAN RELAY NO.3

(a) Inspect the cooling fan relay continuity.
(1) Using an ohmmeter, check that there is continuity between terminals 1 and 2.

If there is no continuity, replace the relay.
(2) Check that there is no continuity between terminals 3 and 5.

If there is continuity, replace the relay.
(3) Apply battery voltage across terminals 1 and 2.
(4) Using an ohmmeter, check that there is continuity between terminals 3 and 5.

If there is no continuity, replace the relay.

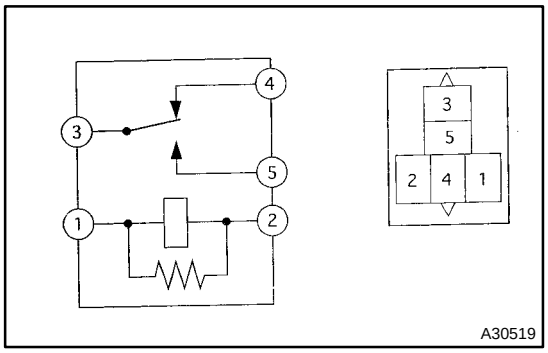

2. COOLING FAN RELAY NO.2

(a) Inspect the cooling fan relay continuity.
(1) Using an ohmmeter, check that there is continuity between terminals 1 and 2.

If there is no continuity, replace the relay.
(2) Using an ohmmeter, check that there is continuity between terminals 3 and 4.

If there is no continuity, replace the relay.
(3) Check that there is no continuity between terminals 3 and 5.

If there is continuity, replace the relay.
(4) Apply battery voltage across terminals 1 and 2.
(5) Using an ohmmeter, check that there is continuity between terminals 3 and 5.

If there is no continuity, replace the relay.

COOLANT (2AZ–FE)

16032–02

REPLACEMENT

1. DRAIN COOLANT

CAUTION:

To avoid the danger of being burned, do not remove the radiator cap while the engine and radiator are still hot, as fluid and steam can be blown out under pressure.

(a) Remove the radiator cap.

(b) Loosen the radiator plug and drain the coolant.

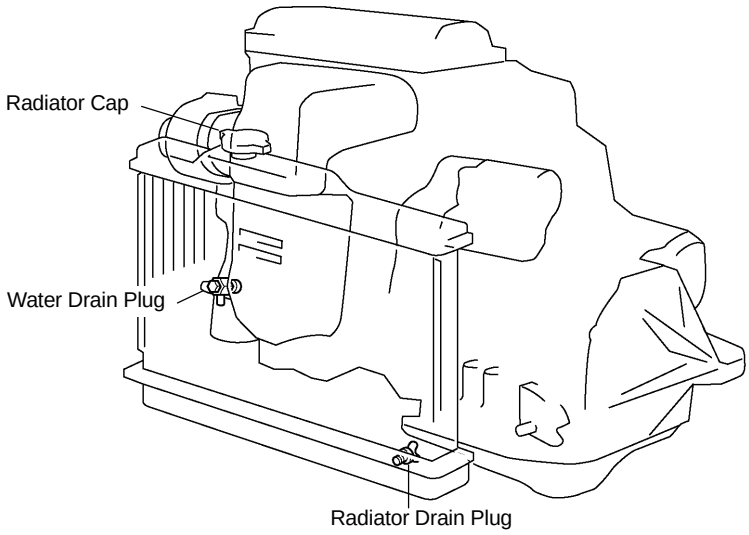

O

A52575

2. ADD COOLANT

(a) Tighten the radiator drain plug.

(b) Add the engine coolant into the radiator until it overflows.

Capacity: 6.2 liters (6.6 US qts, 5.4 lmp. qts)

HINT:

- Press the radiator inlet and outlet hose several times with hard.
- If the coolant level gets lower, pour coolant.
- Use of improper coolants may damage engine cooling system.
- Use ”Toyota Long Life Coolant” or equivalent and mix it with plain water according to the manufacturer’s directions.
- Using of coolant with includes more than 50 % (freezing protection down to –35°C (–31°F) or 60 % (freezing protection down to –50°C (–58°F)) of ethylene–glycol is recommended but not more than 70 %.

(c) Pour coolant into the radiator reservoir tank until it reaches full line.

(d) Install the radiator cap. (★ 1)

(e) Start the engine, and stop shortly. (★ 2)

(f) Remove the radiator cap after 10 seconds. Pour coolant if the coolant level is lower. (★ 3)

(g) Repeat (★ 1), (★ 2) and (★ 3) until the coolant level remains the same.

HINT:

Perform the procedures above before the engine is warm up. Warmed up engine causes the thermostat valve to open, and the air inside of the engine circulates between the radiator and the engine.

(h) Install the radiator cap.

(i) Warm up the engine until the thermostat valve begins to open.

HINT:

Press the radiator inlet and outlet hose several times with hand during the warming up.

(j) Stop the engine and wait until the coolant temp. gets cold. Pour the coolant if the coolant level is lower.

(k) Install the radiator cap and check the radiator reservoir tank coolant level.

3. INSPECT CHECK ENGINE COOLANT LEAK

(a) Fill the radiator with coolant and attach a radiator cap tester.

(b) Pump it to 118 kPa (1.2 kgf/cm^2), and check leakage.

WATER PUMP ASSY (2AZ–FE)

1602V–02

REPLACEMENT

1. **DRAIN COOLANT (See page 16–6)**
2. **REMOVE FAN AND GENERATOR V BELT (See page 14–5)**
   SST 09249–63010
3. **REMOVE GENERATOR ASSY (See page 19–13)**

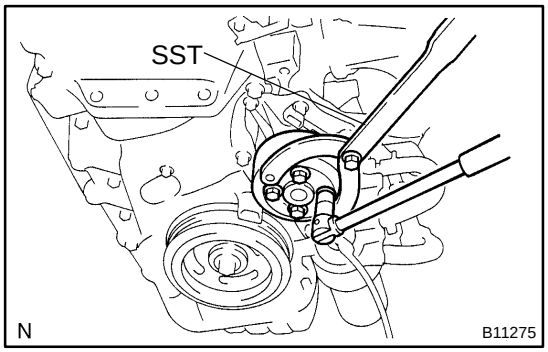

4. REMOVE WATER PUMP PULLEY

(a) Using SST, remove 4 bolts and pump pulley.
SST 09960–10010 (09962–01000, 09963–00700)

(b) Disconnect the crankshaft position sensor wire harness clamp.

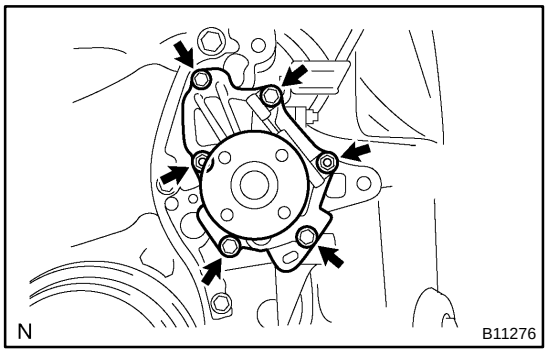

5. REMOVE WATER PUMP ASSY

(a) Remove 4 bolts, 2 nuts, bracket and water pump.

6. INSTALL WATER PUMP ASSY

(a) Remove any old packing(FIPG) material from the contact surface.

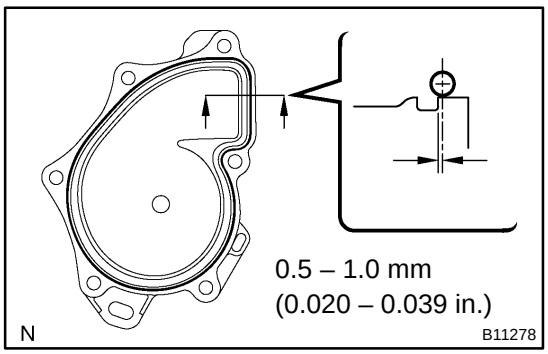

(b) Apply seal packing to the water pump as shown in the illustration .
Seal packing:
Part No. 08826–00080 or equivalent

NOTICE:

- **Remove any oil from the contact surface.**
- **install the water pump within 5 minutes after applying.**
- **Do not put into engine oil within 2 hours after installing.**

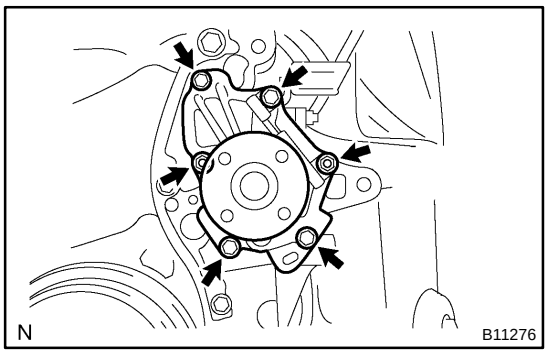

(c) Install the water pump and bracket with 4 bolts and 2 nuts.
Torque: 9.0 N·m (92 kgf·cm, 80 in.·lbf)

(d) Connect the crankshaft position sensor wire harness clamp.

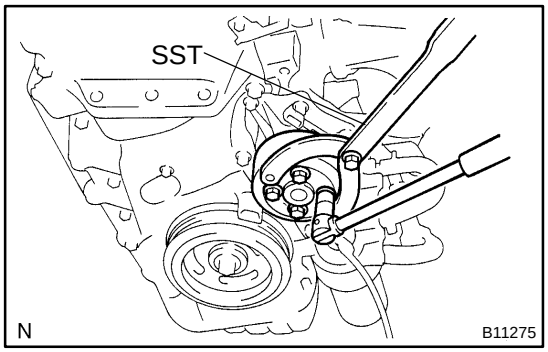

7. INSTALL WATER PUMP PULLEY

(a) Using SST, install the pump pulley with 4 bolts.
SST 09960–10010 (09962–01000, 09963–00700)
Torque: 26 N·m (265 kgf·cm, 19 ft·lbf)

8. INSTALL GENERATOR ASSY
(See page 19–13)

9. INSTALL FAN AND GENERATOR V BELT
(See page 14–5)
SST 09249–63010

10. ADD COOLANT (See page 16–6)

11. INSPECT CHECK ENGINE COOLANT LEAK (See page 16–1)

1602W–02

INSPECTION

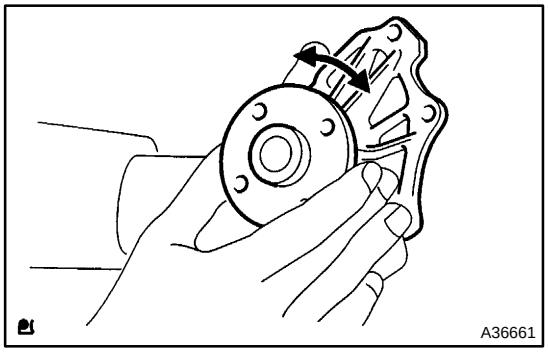

1. INSPECT WATER PUMP ASSY

(a) Visually check the drain hole coolant leakage.
(b) Turn the pulley, and check that the water pump bearing moves smoothly and quietly.

THERMOSTAT (2AZ–FE)

1602X–02

REPLACEMENT

1. DRAIN COOLANT (See page 16–6)

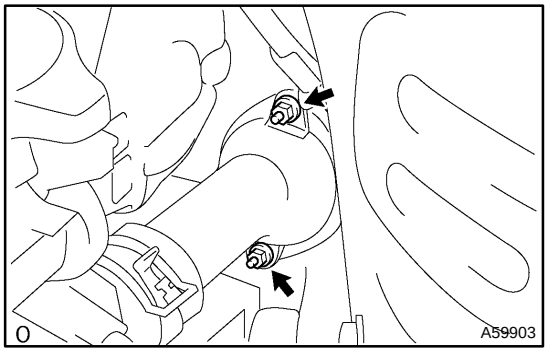

2. REMOVE WATER INLET

(a) Remove 2 nuts, and disconnect the water inlet from the cylinder block.

3. REMOVE THERMOSTAT

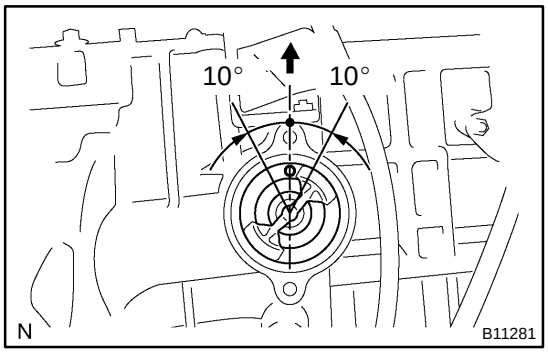

4. INSTALL THERMOSTAT

(a) Install a new gasket to the thermostat.
(b) Install the thermostat with the jiggle valve upward.

HINT:
The jiggle valve may be set within 10° on either side of the prescribed position.

5. INSTALL WATER INLET

(a) Install the water inlet with 2 nuts.
Torque: 9 N·m (92 kgf·cm, 80 in.·lbf)

6. ADD COOLANT (See page 16–6)

7. INSPECT CHECK ENGINE COOLANT LEAK (See page 16–1)

RADIATOR ASSY (2AZ–FE)

16092–01

Removal & Installation and Disassembly & Reassembly

1. **DRAIN COOLANT (See page 16–6)**
2. **DISCONNECT RADIATOR HOSE INLET**
3. **DISCONNECT RADIATOR HOSE OUTLET**
4. **DISCONNECT OIL COOLER INLET HOSE(A/T TRANSAXLE)**
5. **DISCONNECT OIL COOLER OUTLET HOSE(A/T TRANSAXLE)**

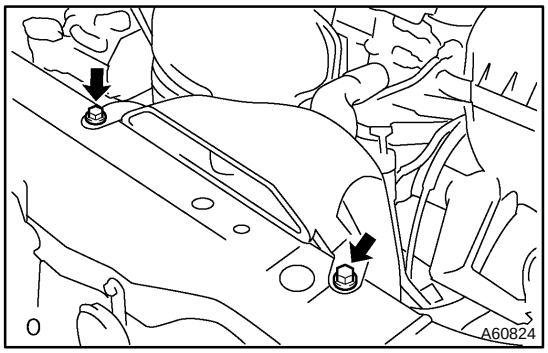

6. REMOVE AIR CLEANER INLET ASSY

(a) Remove the 2 bolts and the air cleaner inlet.

7. REMOVE RADIATOR SUPPORT UPPER

(a) Disconnect the 2 horn connector.

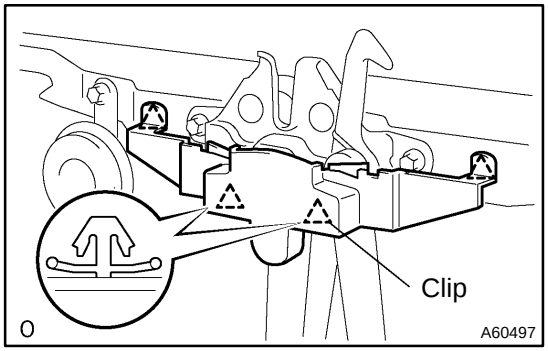

(b) Remove the hood lock release lever cover.

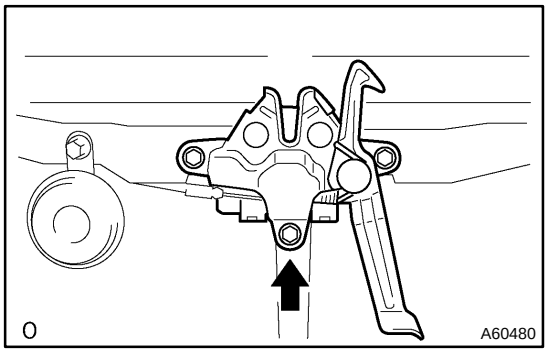

(c) Remove the bolt shown in the illustration.
(d) Remove the 4 bolts and radiator support upper.

8. REMOVE RADIATOR ASSY

(a) Disconnect the fan motor connector.
(b) Remove the radiator w/fan.

9. REMOVE RADIATOR SUPPORT CUSHION

10. REMOVE RADIATOR SUPPORT LOWER

11. REMOVE FAN ASSY,W/MOTOR

12. INSTALL FAN ASSY,W/MOTOR

(a) Install the fan assy w/motor to the radiator.
Torque: 5.0N·m (51 kgf·cm, 44 in.·lbf)

13. INSTALL RADIATOR SUPPORT UPPER

(a) Install the radiator support upper with the 4 bolts.
Torque: 14 N·m (142 kgf·cm, 10 ft·lbf)

14. ADJUST HOOD SUB–ASSY
(See page 16–6)

15. ADD COOLANT (See page 16–6)

16. CHECK ENGINE COOLANT LEAK (See page 16–6)

COOLING SYSTEM (1MZ–FE)

16034–02

ON–VEHICLE INSPECTION

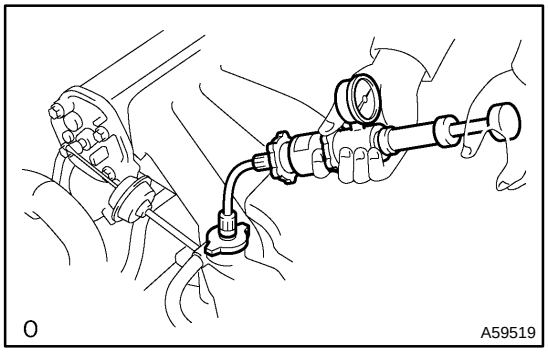

1. INSPECT COOLING SYSTEM FOR LEAKS

CAUTION:

To avoid the danger of being burned, do not remove the radiator cap while the engine and radiator are still hot, as fluid and steam can be blown out under pressure.

(a) Fill the radiator with coolant and attach a radiator cap tester.

(b) Warm up the engine.

(c) Pump it to 118 kPa (1.2 kgf/cm^2, 17.1 psi), and check that the pressure does not drop.

If the pressure drops, check to hoses, radiator or water pump for leaks. If no external leaks are found, check the heater core, cylinder block and head.

2. CHECK ENGINE COOLANT LEVEL AT RESERVOIR

(a) The engine coolant level should be between the ”LOW” and ”FULL” lines, when the engine is cold.

If low, check for leaks and add ”Toyota Long Life Coolant” or equivalent up to the ”FULL” line.

3. CHECK ENGINE COOLANT QUALITY

(a) Remove the radiator cap.

CAUTION:

To avoid the danger of being burned, do not remove the radiator cap while the engine and radiator are still hot, as fluid and steam can be blown out under pressure.

(b) Check if there is any excessive deposits of rust or scale around the radiator cap and radiator filler hole; the coolant should be free from oil.

HINT:

If excessively dirty, replace the coolant.

(c) Reinstall the radiator cap.

INSPECTION

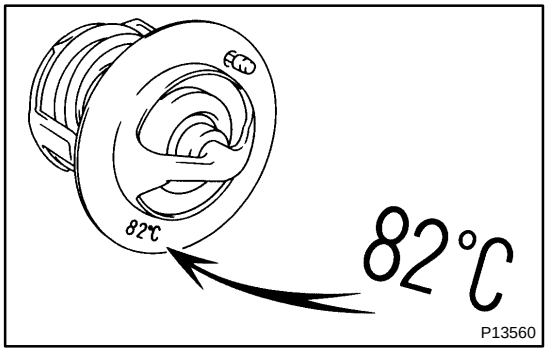

1. THERMOSTAT

HINT:
The thermostat is numbered with the valve opening temperature.

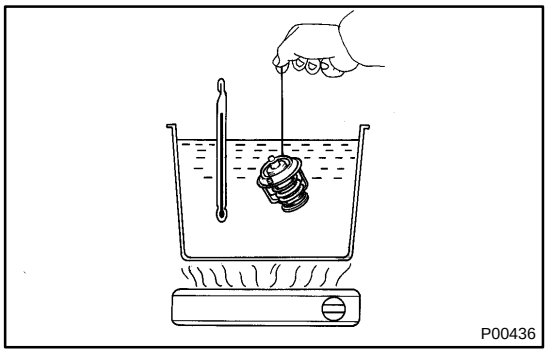

(a) Immerse the thermostat in water and gradually heat the water.
(b) Check the valve opening temperature.
Valve opening temperature:
80 – 84°C (176 – 183°F)

If the valve opening temperature is not as specified, replace the thermostat.

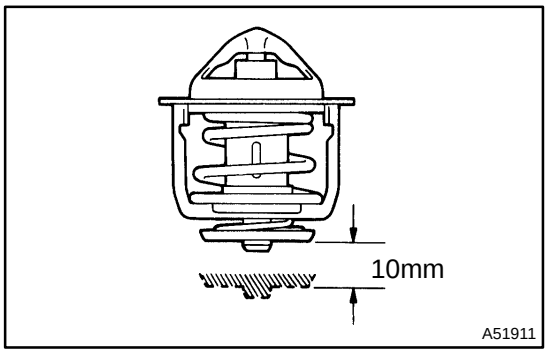

(c) Check the valve lift.
Valve lift: 10 mm (0.394 in.) or more at 95°C (203°F)

If the valve lift is not as specified, replace the thermostat.
(d) Check that the valve is fully closed when the thermostat is at low temperatures (below 77°C (171°F)).

If not closed, replace the thermostat.

2. WATER OUTLET CAP SUB–ASSY

NOTICE:

- **If the reservoir cap has contaminations, always rinse it with water.**
- **Before using a radiator cap tester, wet the relief valve and pressure valve with engine coolant or water.**
- **When performing steps (a) and (b) below, keep the tester at an angle of over 30° above the horizontal.**

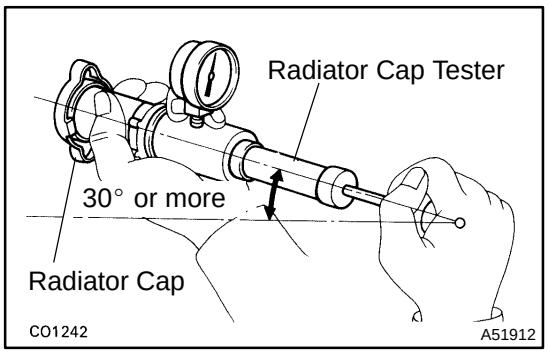

(a) Using a radiator cap tester, slowly pump the tester and check that air is coming from the vacuum valve.

Pump speed: 1 push / (3 seconds or more)

NOTICE:

Push the pump at a constant speed.

If air is not coming from the vacuum valve, replace the reservoir cap.

(b) Pump the tester and measure the relief valve opening pressure.

Pump speed: 1 push within 1 second

NOTICE:

This pump speed is for the first pump only (in order to close the vacuum valve). After this, the pump speed can be reduced.

Standard opening pressure:
83.4 – 112.8 kPa (0.85 – 1.15 kgf/cm^2, 12.1 – 16.4 psi)
Minimum opening pressure:
69 kPa (0.7 kgf/cm^2, 10.0 psi)

HINT:

- Use the tester's maximum reading as the opening pressure.
- If the opening pressure is less than minimum, replace the reservoir cap.

COOLING FAN SYSTEM (1MZ–FE)

16036–02

ON–VEHICLE INSPECTION

HINT:

It is normal that the cooling fan sometime rotates when the ignition switch is turned from ACC to ON.

1. CHECK COOLING FAN OPERATION WITH LOW TEMPERATURE (Below 83°C (181°F))

(a) Turn the ignition switch ON.

(b) Check that the cooling fan stops.

If not, check the cooling fan relay and water temperature switches, and check for disconnection of connectors or wire break between the cooling fan relay and water temperature switches.

(c) Disconnect the water temperature switch No.1 connector.

(d) Connect terminals on the water temperature switch No.1 connector.

(e) Check that the No.1 cooling fan rotates at high speed.

If not, check the No.1 cooling fan relay and No.1 cooling fan.

(f) Reconnect the water temperature switch No.1 connector.

(g) Disconnect the water temperature switch No.2 connector.

(h) Ground terminal on the water temperature switch No.2 wire harness side connector.

(i) Check that the No.1 and No.2 cooling fans rotate at low speed.

If not, check the No.2 cooling fan relay, No.3 cooling fan relay and No.2 cooling fan.

(j) Reconnect the water temperature switch No.2 connector

2. INSPECT COOLING FAN

(a) Disconnect the cooling fan connector.

(b) Connect battery and ammeter to the cooling fan connector.

(c) Check that the cooling fan rotates smoothly, and check the reading on the ammeter.

Standard amperage: 8.0 – 12.0 A at 20°C (68°F)

(d) Reconnect the cooling fan connector.

INSPECTION

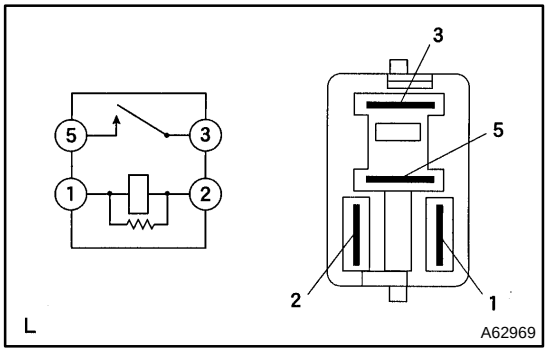

1. COOLING FAN RELAY
COOLING FAN RELAY NO.3

(a) Inspect the cooling fan relay continuity.
  (1) Using an ohmmeter, check that there is continuity between terminals 1 and 2.

If there is no continuity, replace the relay.
  (2) Check that there is no continuity between terminals 3 and 5.

If there is continuity, replace the relay.
  (3) Apply battery voltage across terminals 1 and 2.
  (4) Using an ohmmeter, check that there is continuity between terminals 3 and 5.

If there is no continuity, replace the relay.

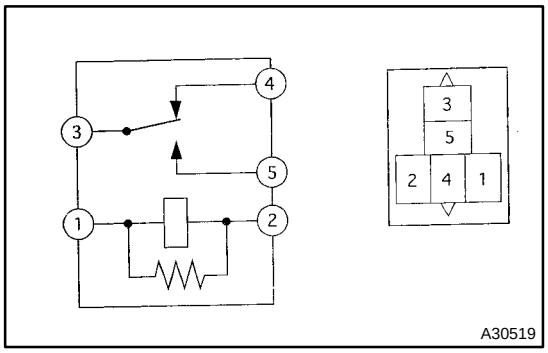

2. COOLING FAN RELAY NO.2

(a) Inspect the cooling fan relay continuity.
  (1) Using an ohmmeter, check that there is continuity between terminals 1 and 2.

If there is no continuity, replace the relay.
  (2) Using an ohmmeter, check that there is continuity between terminals 3 and 4.

If there is no continuity, replace the relay.
  (3) Check that there is no continuity between terminals 3 and 5.

If there is continuity, replace the relay.
  (4) Apply battery voltage across terminals 1 and 2.
  (5) Using an ohmmeter, check that there is continuity between terminals 3 and 5.

If there is no continuity, replace the relay.

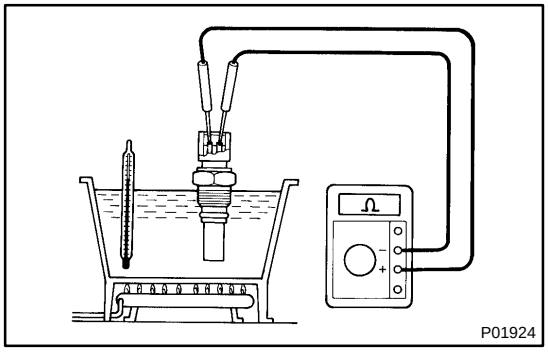

3. TEMPERATURE DETECT SWITCH

(a) Using an ohmmeter, check that there is continuity between the terminals when the coolant temperature is above 98°C (208°F).

If there is no continuity, replace the switch.

(b) Check that there is no continuity, between terminals when the coolant temperature is below 88°C (190°F).

If there is continuity, replace the switch.

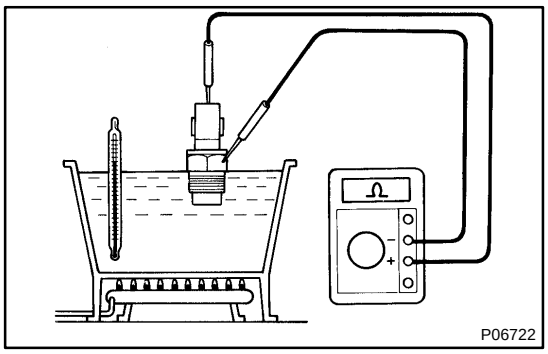

4. TEMPERATURE DETECT SWITCH NO.2

(a) Using an ohmmeter, check that there is continuity between the terminals when the coolant temperature is above 93°C (199°F).

If there is no continuity, replace the switch.

(b) Check that there is no continuity, between terminals when the coolant temperature is below 83°C (181°F).

If there is continuity, replace the switch.

COOLANT (1MZ–FE)

16038–02

REPLACEMENT

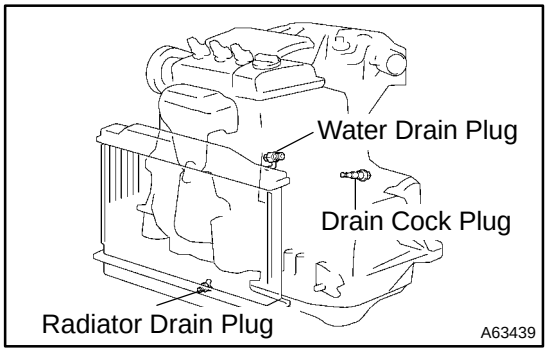

1. DRAIN COOLANT

(a) Remove the radiator cap from the water outlet.

CAUTION:

To avoid the danger of being burned, do not remove the radiator cap while the engine and radiator are still hot, as fluid and steam can be blown out under pressure.

(b) Loosen the radiator drain plug and drain the coolant.

2. ADD COOLANT

(a) Slowly fill the system with coolant.

HINT:

- Use of improper coolants may damage engine cooling system.
- Use ”Toyota Long Life Coolant” or equivalent and mix it with plain water according to the manufacturer’s directions.
- Using of coolant with includes more than 50 % (freezing protection down to –35°C (–31°F) or 60 % (freezing protection down to –50°C (–58°F)) of ethylene–glycol is recommended but not more than 70 %.

NOTICE:

- **Do not use an alcohol type coolant or plain water alone.**
- **The coolant should be mixed with plain water (preferably demineralized water).**
  Capacity: 9.2 liters (9.7 US qts, 8.1 lmp. qts)

3. CHECK ENGINE COOLANT LEAK

(a) Fill the radiator with coolant and attach a radiator cap tester.

(b) Pump it to 118 kPa (1.2 kgf/cm^2), and check leakage.

WATER PUMP ASSY (1MZ–FE)

1602G–02

REPLACEMENT

1. **DRAIN COOLANT (See page 16–20)**
2. **REMOVE FRONT WHEEL RH**
3. **REMOVE FRONT FENDER APRON SEAL RH**

4. **REMOVE V (COOLER COMPRESSOR TO CRANKSHAFT PULLEY) BELT NO.1 (See page 14–140)**
5. **REMOVE VANE PUMP V BELT (See page 14–140)**
6. **REMOVE ENGINE MOVING CONTROL ROD (See page 14–155)**
7. **REMOVE ENGINE MOUNTING STAY NO.2 RH (See page 14–155)**
8. **REMOVE GENERATOR BRACKET NO.2**

9. **REMOVE CRANKSHAFT PULLEY (See page 14–206)**
   SST 09213–54015 (91651–60855), 09330–00021, 09950–50013 (09951–05010, 09952–05010, 09953–05010, 09954–05030)
10. **REMOVE TIMING BELT NO.1 COVER**

11. **REMOVE TIMING BELT NO.2 COVER (See page 14–206)**
12. **REMOVE TRANSVERSE ENGINE ENGINE MOUNTING BRACKET**

13. **REMOVE TIMING BELT GUIDE NO.2**

14. **REMOVE TIMING BELT (See page 14–243)**

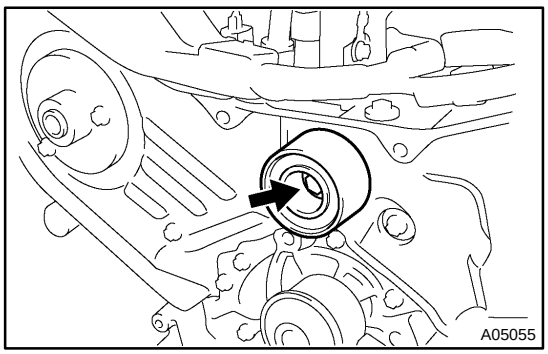

15. **REMOVE TIMING BELT IDLER SUB–ASSY NO.2**

(a) Remove the bolt and timing belt idler sub assembly No. 2.

16. **REMOVE CAMSHAFT TIMING PULLEY (See page 14–212)**
    SST 09960–10010 (09962–01000, 09963–01000), 09249–63010
17. **REMOVE TIMING BELT NO.3 COVER**

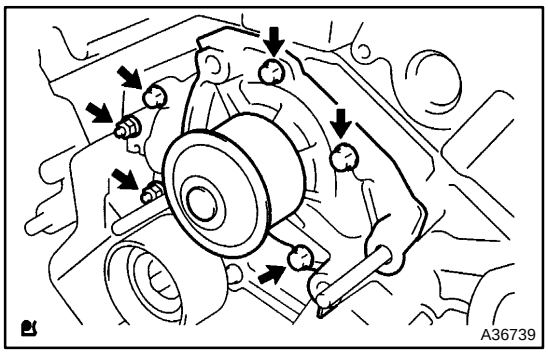

18. REMOVE WATER PUMP ASSY

(a) Remove the 4 bolts, 2 nuts and water pump assembly.

19. INSTALL WATER PUMP ASSY

(a) Install a new gasket and the water pump with the 4 bolts and 2 nuts.
Torque: 8 N·m (82 kgf·cm, 71 in.·lbf)

20. INSTALL TIMING BELT NO.3 COVER
(See page 14–212)

21. INSTALL CAMSHAFT TIMING PULLEY
(See page 14–212)
SST 09962–01000, 09963–01000), 09960–10010, 09249–63010

22. INSTALL TIMING BELT IDLER SUB–ASSY NO.2

Torque: 43 N·m (438 kgf·cm, 32 ft·lbf)

23. INSPECT TIMING BELT
(See page 14–206)

24. INSTALL TIMING BELT
(See page 14–243)
SST 09960–10010 (09962–01000, 09963–01000)

25. INSTALL CHAIN TENSIONER ASSY NO.1
(See page 14–206)

26. INSTALL TIMING BELT GUIDE NO.2
(See page 14–206)

27. INSTALL TRANSVERSE ENGINE ENGINE MOUNTING BRACKET

Torque: 28 N·m (286 kgf·cm, 21 ft·lbf)

28. INSTALL TIMING BELT NO.2 COVER
(See page 14–206)

29. INSTALL TIMING BELT NO.1 COVER
(See page 14–206)

30. INSTALL CRANKSHAFT PULLEY
(See page 14–206)
SST 09213–54015 (91651–60855), 09330–00021

31. INSTALL GENERATOR BRACKET NO.2

Torque: 28 N·m (286 kgf·cm, 21 ft·lbf)

32. INSTALL ENGINE MOUNTING STAY NO.2 RH
(See page 14–155)

33. INSTALL ENGINE MOVING CONTROL ROD
(See page 14–155)

34. INSTALL VANE PUMP V BELT
(See page 14–140)

35. INSTALL V (COOLER COMPRESSOR TO CRANKSHAFT PULLEY) BELT NO.1 (See page 14–140)
36. INSPECT DRIVE BELT DEFLECTION AND TENSION(REFERENCE) (See page 14–136)
37. ADD COOLANT (See page 16–20)
38. CHECK ENGINE COOLANT LEAK (See page 16–20)
39. INSTALL FRONT WHEEL RH
    Torque: 103 N·m (1051 kgf·cm, 76 ft·lbf)

1602H–02

INSPECTION

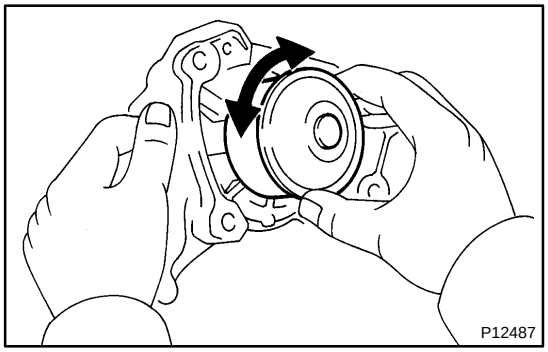

1. INSPECT WATER PUMP ASSY

(a) Visually check the drain hole for coolant leakage.
(b) Turn the pulley, and check that the water pump bearing moves smoothly and quietly.

THERMOSTAT (1MZ–FE)

1602F–02

REPLACEMENT

1. **DRAIN COOLANT (See page 16–20)**
2. **REMOVE BATTERY**
3. **REMOVE AIR CLEANER INLET ASSY**
4. **REMOVE AIR CLEANER ASSEMBLY WITH HOSE (See page 10–12)**
5. **REMOVE AIR CLEANER BRACKET**
6. **REMOVE AIR CLEANER INLET NO.1**
7. **DISCONNECT RADIATOR HOSE OUTLET**
8. **REMOVE WATER INLET PIPE**

(a) Remove the bolt and water inlet pipe.

9. **REMOVE WATER INLET**

(a) Remove the 3 bolts and water inlet.

10. **REMOVE THERMOSTAT**

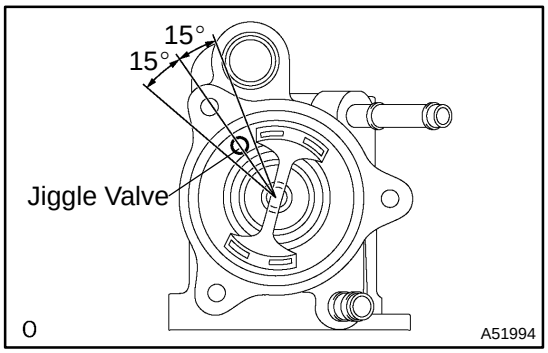

11. **INSTALL THERMOSTAT**

(a) Install a new gasket to the thermostat.
(b) Align the thermostat jiggle valve with the upper stud bolt, and insert the thermostat in the water inlet housing.

HINT:
The jiggle valve may be set within 15° of either side of the prescribed position.

12. **INSTALL WATER INLET**

Torque: 8 N·m (82 kgf·cm, 71 in.·lbf)

13. **INSTALL WATER INLET PIPE**

(a) Install a new O–ring to the water inlet pipe.
(b) Apply soapy water to the O–ring.
(c) Connect the water inlet pipe to the water inlet.
(d) Install the bolt holding the water inlet pipe to the cylinder head.
Torque: 20 N·m (204 kgf·cm, 15 ft·lbf)

14. **INSTALL AIR CLEANER ASSEMBLY WITH HOSE (See page 10–12)**
15. **CONNECT VACUUM HOSE**
16. **ADD COOLANT (See page 16–20)**
17. **CHECK ENGINE COOLANT LEAK (See page 16–20)**

RADIATOR ASSY (1MZ–FE)

1608Y–01

Removal & Installation and Disassembly & Reassembly

1. **DRAIN COOLANT (See page 16–20)**
2. **DISCONNECT RADIATOR HOSE INLET**
3. **DISCONNECT RADIATOR HOSE OUTLET**
4. **DISCONNECT OIL COOLER INLET HOSE**
5. **DISCONNECT OIL COOLER OUTLET HOSE**

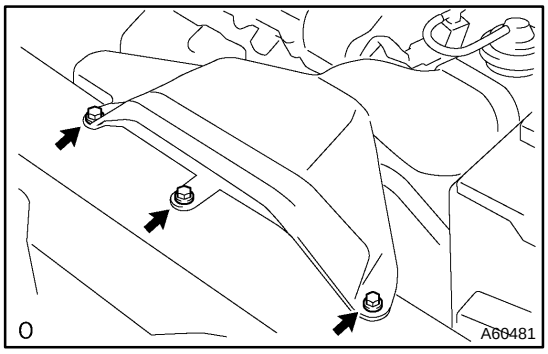

6. REMOVE AIR CLEANER INLET ASSY

(a) Remove the 3 bolts, the air cleaner inlet and air cleaner inlet No.1.

7. REMOVE RADIATOR SUPPORT UPPER

(a) Disconnect the 2 horn connector.

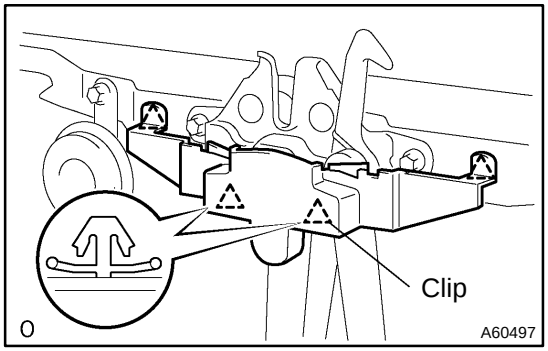

(b) Remove the hood lock release lever cover.

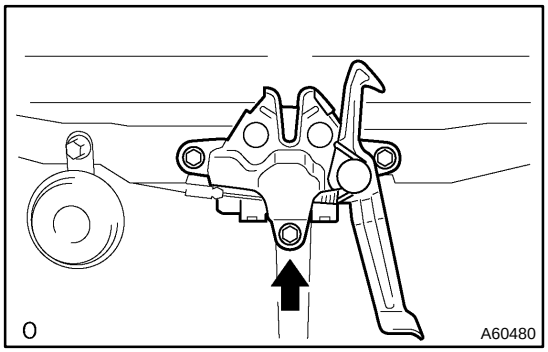

(c) Remove the bolt shown in the illustration.
(d) Remove the 4 bolts and radiator support upper.

8. REMOVE RADIATOR ASSY

(a) Disconnect the fan motor connector.
(b) Remove the radiator w/fan.

9. REMOVE RADIATOR SUPPORT CUSHION

10. REMOVE RADIATOR SUPPORT LOWER

11. REMOVE FAN ASSY,W/MOTOR

12. INSTALL FAN ASSY,W/MOTOR

(a) Install the fan assy w/motor to the radiator.
Torque: 5.0 N·m (51 kgf·cm, 44 in.·lbf)

13. INSTALL RADIATOR SUPPORT UPPER

(a) Install the radiator support upper with the 4 bolts.
Torque: 14 N·m (142 kgf·cm,10 ft·lbf)

14. ADJUST HOOD SUB–ASSY
(See page 75–1)

15. ADD COOLANT (See page 16–20)

16. CHECK ENGINE COOLANT LEAK (See page 16–20)

LUBRICATION SYSTEM (2AZ–FE)

1701Z–02

ON–VEHICLE INSPECTION

1. CHECK ENGINE OIL LEVEL

(a) After warm up the engine and then 5 minutes after the engine stop, oil level should be between the low level and full level marks of the dipstick.

If low, check for leakage and add oil up to the full level mark.

NOTICE:

Do not fill with engine oil above the full level mark.

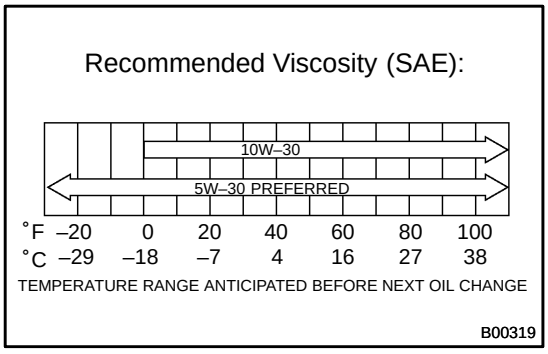

2. CHECK ENGINE OIL QUALITY

(a) Check the oil for deterioration, entry of water, discoloring or thinning.

If the quality is visibly poor, replace the oil.

Oil grade:

API grade SJ or SL, Energy–Conserving or ILSAC, multigrade engine oil is recommended. SAE 5W–30 is the best choice for your vehicle, for good fuel economy, and good starting in cold weather.

3. REMOVE OIL PRESSURE SWITCH ASSY

(a) Disconnect the oil pressure switch connector.

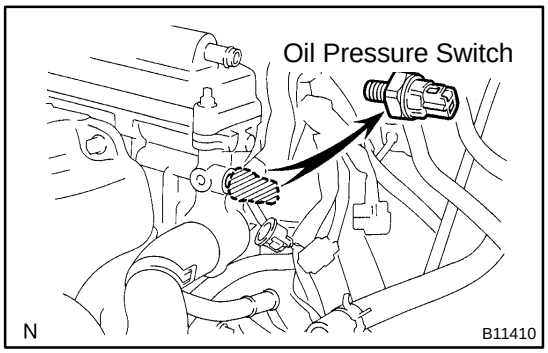

(b) Remove the oil pressure switch.

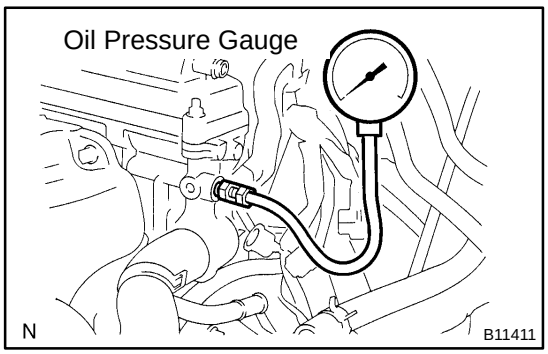

4. INSTALL OIL PRESSURE GAUGE

(a) Install the oil pressure gauge.

5. WARM UP ENGINE

6. CHECK OIL PRESSURE

Oil pressure:

At idle	29 kPa (0.3 kgf·cm^2, 4.3 psi) or more
At 3,000 rpm	245 – 539 kPa (2.5 – 5.5 kgf·cm^2, 36 – 78 psi) or more

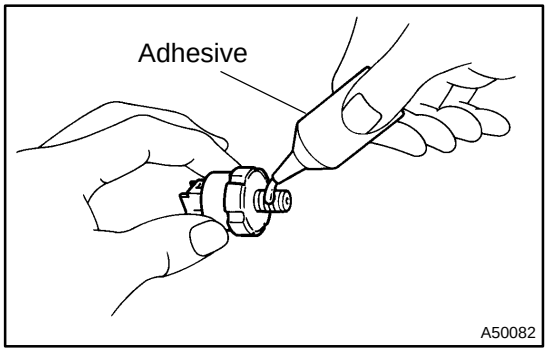

7. INSTALL OIL PRESSURE SWITCH

(a) Remove the oil pressure gauge.

(b) Apply adhesive to 2 or 3 threads of the oil pressure switch.
Adhesive:
Part No. 08833–00080, THREE BOND 1344, LOCTITE 242 or equivalent

(c) Install the oil pressure switch.
Torque: 15 N·m (152 kgf·cm, 11 ft·lbf)

(d) Connect the oil pressure switch connector.

8. START ENGINE AND CHECK FOR LEAKS

OIL PUMP ASSY (2AZ–FE)

1701V–02

REPLACEMENT

1. REMOVE CHAIN SUB–ASSY
(See page 14–74)

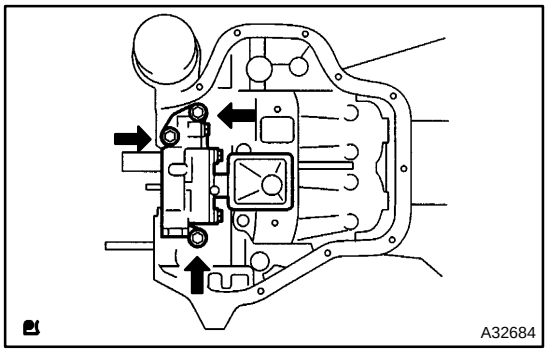

2. REMOVE OIL PUMP ASSY

(a) Remove 3 bolts and oil pump assembly.

3. INSTALL OIL PUMP ASSY

(a) Place a new gasket on the cylinder block.
(b) Install the oil pump assembly with 3 bolts.
Torque: 19 N·m (194 kgf·cm, 14 ft·lbf)

OVERHAUL

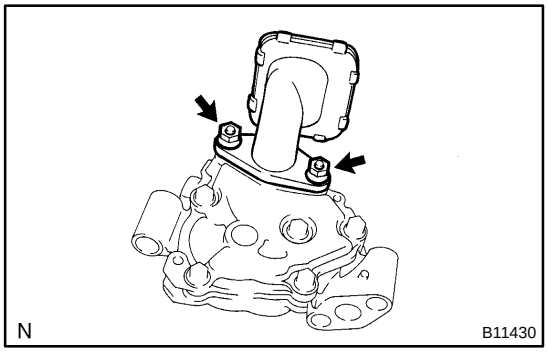

1. INSPECT OIL PUMP ASSY

(a) Remove oil pump strainer.
  (1) Remove 2 nuts and oil pump strainer.

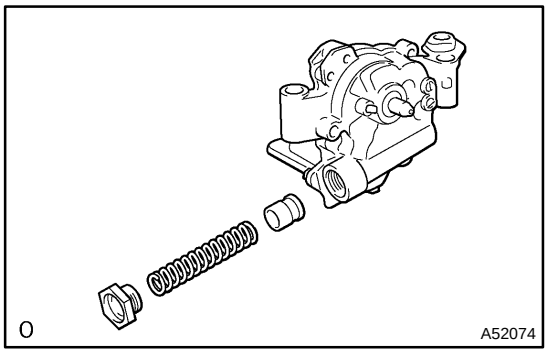

(b) Remove oil pump relief valve.
  (1) Using a socket wrench (27mm), remove the relief valve plug.
  (2) Remove the oil pump relief valve spring and oil pump relief valve.

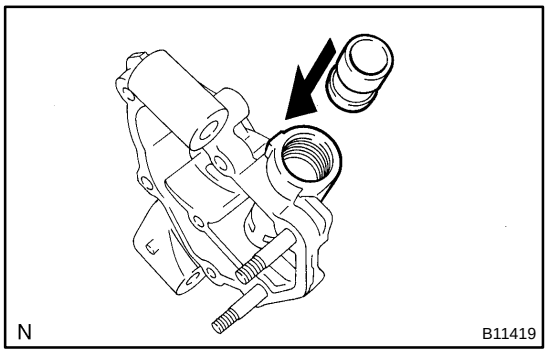

(c) Inspect oil pump relief valve.
  (1) Coat the valve with engine oil and check that it falls smoothly into the valve hole by its own weight.

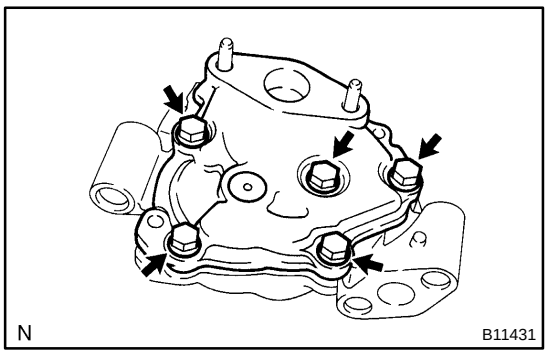

(d) Remove the oil pump cover.
  (1) Remove 5 bolts and oil pump body cover.

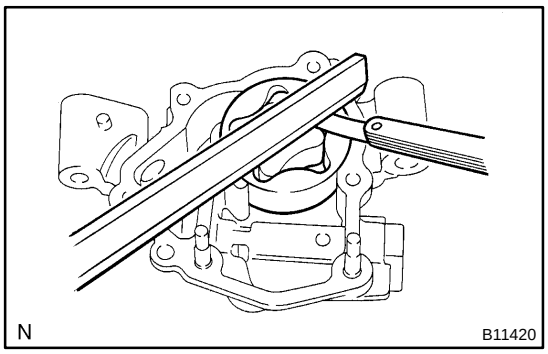

(e) Inspect rotor side clearance.
(1) Using a feeler gauge and precision straight edge, measure the clearance between the rotors and precision straight edge.
Standard side clearance:
0.030–0.085 mm (0.0012–0.0033 in.)
Maximum side clearance:
0.16 mm (0.0063 in.)

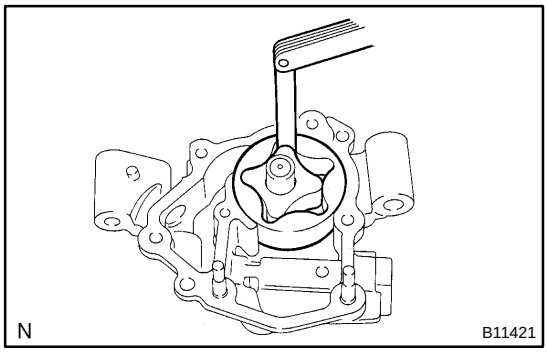

(f) Inspect rotor tip clearance.
(1) Using a feeler gauge, measure the clearance between the drive and driven rotor tips.
Standard tip clearance:
0.080–0.160 mm (0.0031–0.0063 in.)
Maximum tip clearance:
0.35 mm (0.0138 in.)

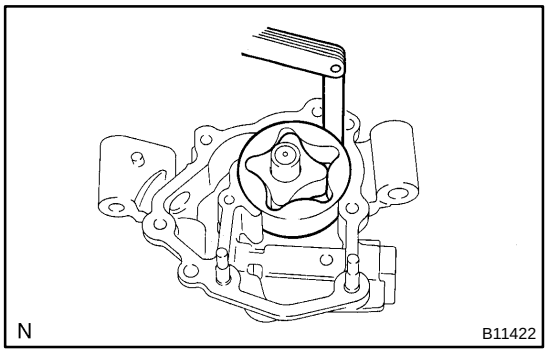

(g) Inspect rotor body clearance.
(1) Using a feeler gauge, measure the clearance between the driven rotor and body.
Standard body clearance:
0.100–0.170 mm (0.00394–0.00669 in.)
Maximum body clearance:
0.325 mm (0.01280 in.)

(h) Remove the oil pump rotor set.

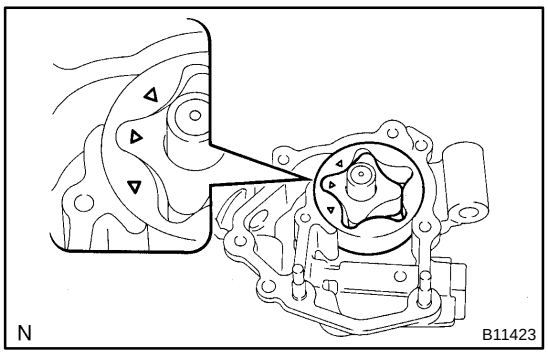

(i) Install the oil pump rotor set.
(1) Coat the drive rotor and driven rotors with engine oil.
(2) Place the drive and driven rotors into pump body with the marks facing the pump body cover side.

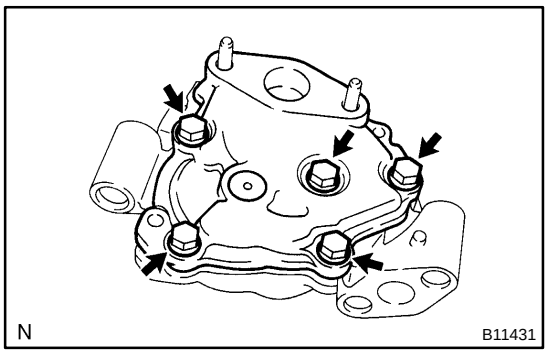

(j) Install oil pump cover.
(1) Install the pump body cover with 5 bolts.
Torque: 8.8 N·m (90 kgf·cm, 78 in.·lbf)

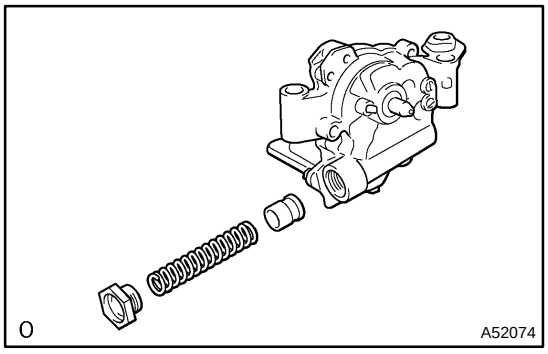

(k) Install oil pump relief valve.
(1) Coat the oil pump relief valve with engine oil.
(2) Insert the relief valve and spring into the pump body hole.
(3) Using a socket wrench (27mm), install the relief valve plug.

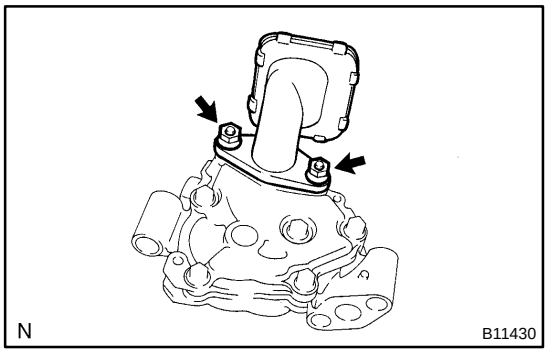

(l) Install oil pump strainer.
(1) Place a new gasket on the oil pump.
(2) Install the oil pump strainer with 2 nuts.
Torque: 8.8 N·m (90 kgf·cm, 78 in.·lbf)

OIL FILTER SUB–ASSY (2AZ–FE)

1701X–02

REPLACEMENT

CAUTION:

- **Prolonged and repeated contact with mineral oil will result in the removal of natural fats from the skin, leading to dryness, irritation and dermatitis. In addition, used engine oil contains potentially harmful contaminants which may cause skin cancer.**
- **Exercise caution in order to minimize the length and frequency of contact of your skin to used oil. Wear protective clothing and gloves. Wash your skin thoroughly with soap and water, or use water–less hand cleaner to remove any used engine oil. Do not use gasoline, thinners, or solvents.**
- **In order to preserve the environment, used oil and used oil filter must be disposed of only at designated disposal sites.**

1. DRAIN ENGINE OIL

(a) Remove the oil filler cap.

(b) Remove the oil drain plug, and drain the oil into a container.

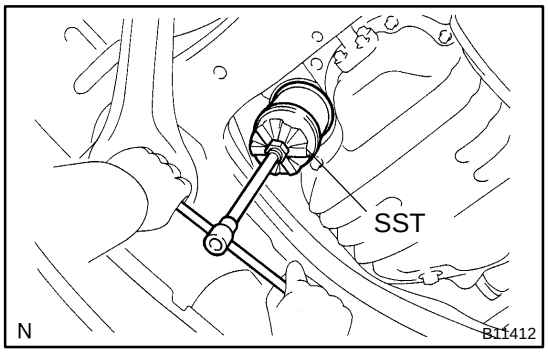

2. REMOVE OIL FILTER SUB–ASSY

(a) Using SST, remove the oil filter.
SST 09228–06501

3. INSTALL OIL FILTER SUB–ASSY

(a) Check and clean the oil filter installation surface.

(b) Apply clean engine oil to the gasket of a new oil filter.

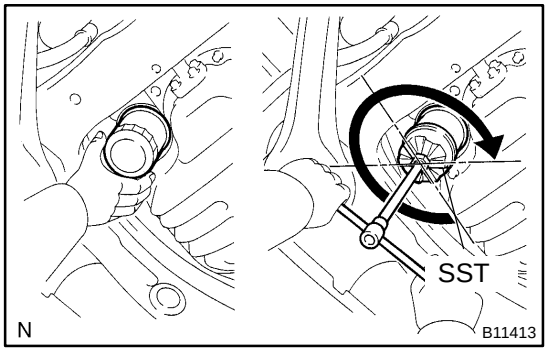

(c) Lightly screw the oil filter into place, and tighten it until the gasket contacts the seat.

(d) Using SST, tighten it an additional 3/4 turn.
SST 09228–06501

4. ADD ENGINE OIL

(a) Clean and install the oil drain plug with a new gasket.
Torque: 25 N·m (255 kgf·cm, 18 ft·lbf)

(b) Fill with fresh engine oil.
Capacity:
Drain and refill w/ Oil filter change 3.8 liters (4.0 US qts, 3.3 lmp. qts)
Drain and refill w/o Oil filter change 3.6 liters (3.8 US qts, 3.2 lmp. qts)
Dry fill 4.5 liters (4.8 US qts, 4.0 lmp. qts)

(c) Install the oil filler cap.

5. INSPECT OIL LEAK

LUBRICATION SYSTEM (1MZ–FE)

17020–02

ON–VEHICLE INSPECTION

1. CHECK ENGINE OIL LEVEL

(a) After warm up the engine and then 5 minutes after the engine stop, oil level should be between the low level and full level marks of the dipstick.

If low, check for leakage and add oil up to the full level mark.

NOTICE:

Do not fill with engine oil above the full level mark.

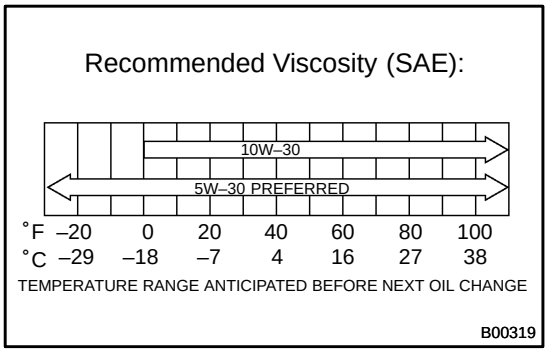

2. CHECK ENGINE OIL QUALITY

(a) Check the oil for deterioration, entry of water, discoloring or thinning.

If the quality is visibly poor, replace the oil.

Oil grade:

API grade SJ or SL, Energy–Conserving or ILSAC, multigrade engine oil is recommended. SAE 5W–30 is the best choice for your vehicle, for good fuel economy, and good starting in cold weather.

3. REMOVE OIL PRESSURE SWITCH ASSY

(a) Disconnect the oil pressure switch connector.

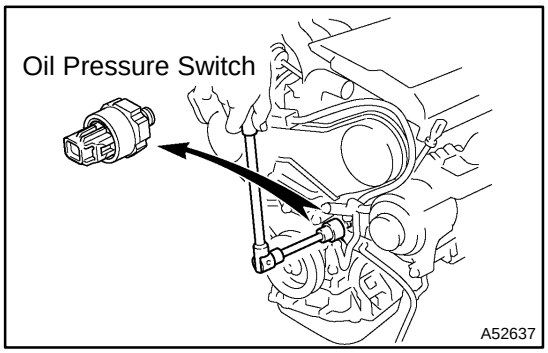

(b) Remove the oil pressure switch.

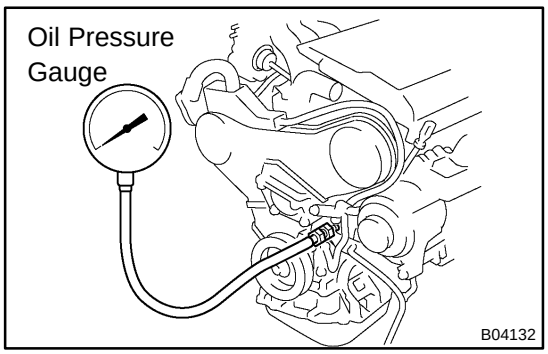

4. INSTALL OIL PRESSURE GAUGE

(a) Install the oil pressure gauge.

5. WARM UP ENGINE

6. CHECK OIL PRESSURE

Oil pressure:

At idle	29 kPa (0.3 kgf·cm^2, 4.3 psi) or more
At 3,000 rpm	294 – 539 kPa (3.0 – 5.5 kgf·cm^2, 43 – 78 psi)

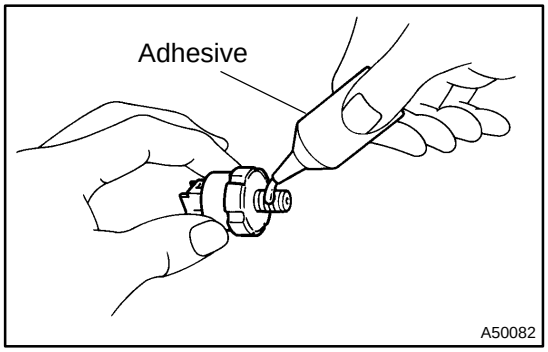

7. INSTALL OIL PRESSURE SWITCH

(a) Remove the oil pressure gauge.

(b) Apply adhesive to 2 or 3 threads of the oil pressure switch.
Adhesive:
Part No. 08833–00080, THREE BOND 1344, LOCTITE 242 or equivalent

(c) Install the oil pressure switch.
Torque: 15 N·m (152 kgf·cm, 11 ft·lbf)

(d) Connect the oil pressure switch connector.

8. START ENGINE AND CHECK FOR LEAKS

OIL PUMP ASSY (1MZ–FE)

1705L–01

REPLACEMENT

1. **REMOVE FRONT WHEEL RH**
2. **REMOVE FRONT FENDER APRON SEAL RH**

3. **REMOVE ENGINE UNDER COVER RH**

4. **DRAIN ENGINE OIL**

(a) Install a new gasket after draining engine oil.
Torque: 45 N·m (459 kgf·cm, 33 ft·lbf)

5. **REMOVE FRONT SUSPENSION UPPER BRACE CENTER (W/ FRONT SUSPENSION BRACE UPPER CENTER)**

6. **REMOVE V (COOLER COMPRESSOR TO CRANKSHAFT PULLEY) BELT NO.1**
(See page 14–140)
7. **REMOVE VANE PUMP V BELT**
(See page 14–140)
8. **REMOVE ENGINE MOVING CONTROL ROD**
(See page 14–155)
9. **REMOVE ENGINE MOUNTING STAY NO.2 RH**
(See page 14–155)
10. **REMOVE GENERATOR BRACKET NO.2**

11. **REMOVE CRANKSHAFT PULLEY**
(See page 14–206)
SST 09213–54015 (91651–60855), 09330–00021, 09950–50013 (09951–05010, 09952–05010, 09953–05010, 09954–05030)
12. **REMOVE TIMING BELT NO.1 COVER**

13. **REMOVE TIMING BELT NO.2 COVER**
(See page 14–206)
14. **REMOVE TRANSVERSE ENGINE ENGINE MOUNTING BRACKET**

15. **REMOVE TIMING BELT GUIDE NO.2**

16. **REMOVE TIMING BELT**
(See page 14–243)
17. **REMOVE EXHAUST PIPE NO.1 SUPPORT BRACKET**

18. **REMOVE EXHAUST PIPE ASSY FRONT**

19. **REMOVE EXHAUST PIPE SUPPORT BRACKET NO.1**

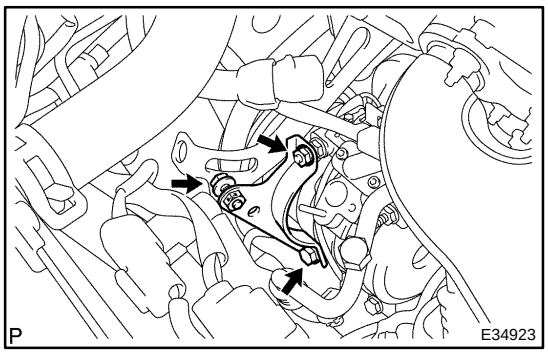

20. SEPARATE COMPRESSOR AND MAGNETIC CLUTCH

(a) Remove the 2 bolts, nut and drive belt adjusting bar bracket.

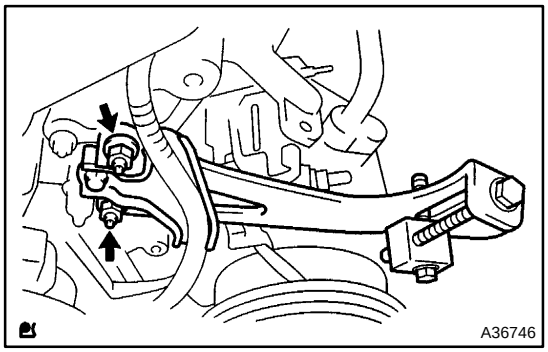

(b) Remove the 2 nuts, the generator bracket adjusting bar with wire harness cramp bracket.

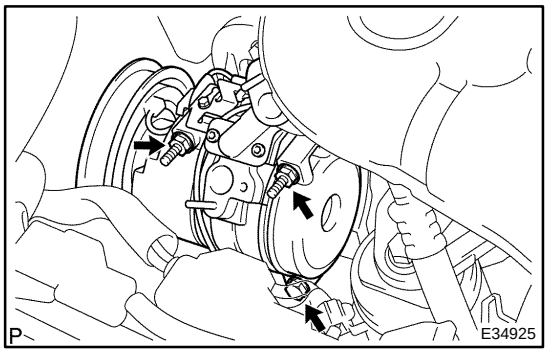

(c) Disconnect the compressor, magnetic clutch connector and the wire harness cramp.

(d) Remove the 3 bolts, the compressor and magnetic clutch.

HINT:

Hung up the hoses instead of detaching.

21. REMOVE TIMING BELT IDLER SUB–ASSY NO.2
(See page 16–21)

22. REMOVE CAMSHAFT TIMING PULLEY
(See page 14–212)

SST 09960–10010 (09962–01000, 09963–01000), 09249–63010

23. REMOVE TIMING BELT IDLER SUB–ASSY NO.1

(a) Using a 10mm socket hexagon wrench, remove the timing belt idler sub–assembly No. 1 and the plate washer.

24. REMOVE CRANKSHAFT TIMING PULLEY
(See page 14–243)

SST 09950–50013 (09951–05010, 09952–05010, 09953–05020, 09954–05010)

25. REMOVE TIMING BELT NO.3 COVER

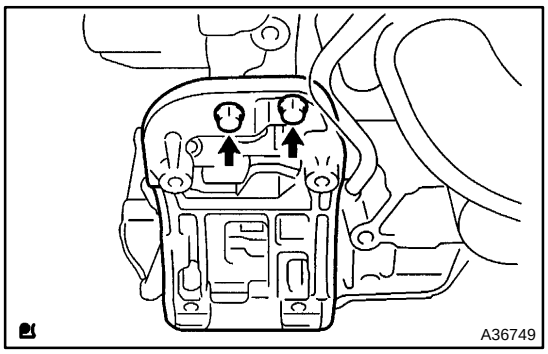

26. REMOVE COMPRESSOR MOUNTING BRACKET NO.1

(a) Remove the 2 bolts and compressor mounting bracket No. 1.

27. REMOVE OIL LEVEL GAGE GUIDE

(a) Remove the bolt and oil level gage guide.

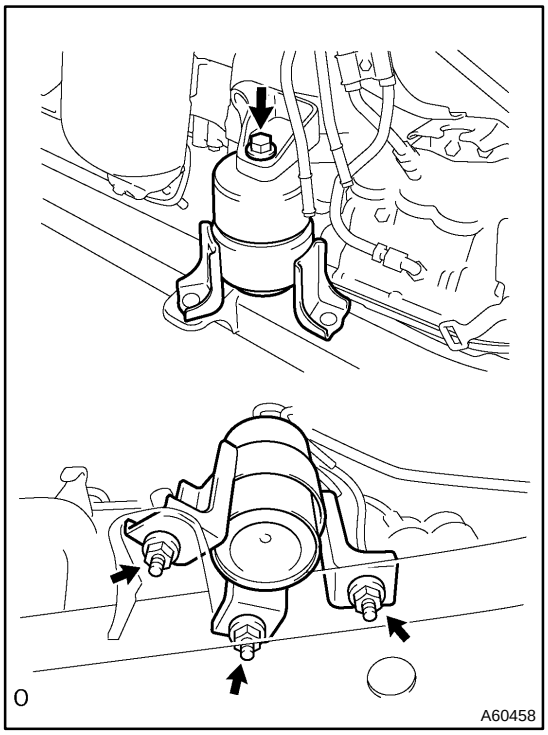

28. SEPARATE TRANSVERSE ENGINE ENGINE MOUNTING INSULATOR

(a) Remove the 3 nuts and a bolt, and separate the engine mounting insulator front.

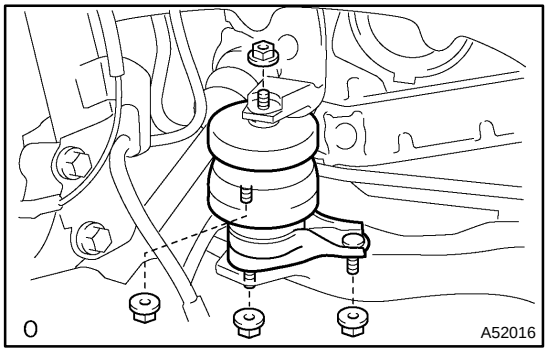

29. REMOVE TRANSVERSE ENGINE ENGINE MOUNTING INSULATOR

(a) Remove the bolt and disconnect the power steering return hose cramp from the frame.
(b) Remove the 4 nuts.
(c) Place a wooden block between the jack and engine, and set the jack, then remove the engine mounting insulator.
(d) Handle a jack up to remove the engine mounting insulator RH.

NOTICE:
Be careful not to damage the contact surfaces of the oil pan.

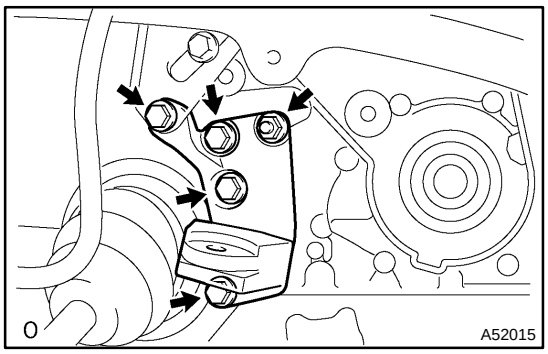

30. REMOVE TRANSVERSE ENGINE ENGINE MOUNTING BRACKET

(a) Remove the 4 bolts, nut and bracket.

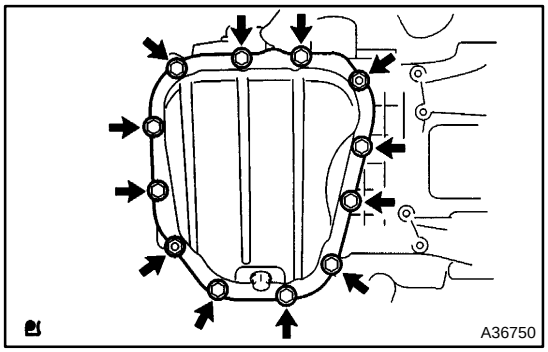

31. REMOVE OIL PAN SUB–ASSY NO.2

(a) Remove the 10 bolts and 2 nuts.

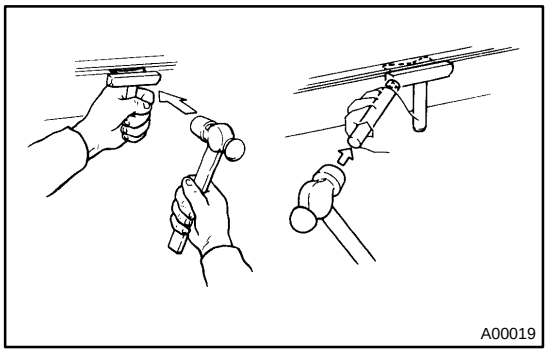

(b) Using SST, remove the oil pan No. 2.
SST 09032–00100

NOTICE:
Be careful not to damage the oil pan No. 2 flange.

32. REMOVE OIL STRAINER SUB–ASSY

(a) Remove the bolt, 2 nuts and oil strainer sub–assembly.

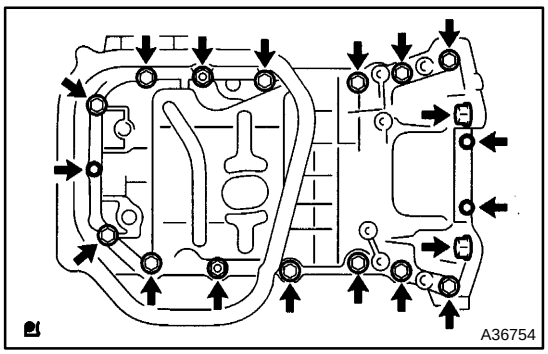

33. REMOVE OIL PAN SUB–ASSY

(a) Remove the 17 bolts and 2 nuts.

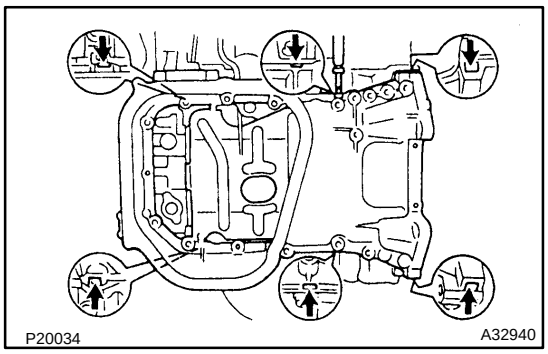

(b) Using a screwdriver, remove the oil pan by prying the portions between the cylinder block and oil pan.

NOTICE:

Be careful not to damage the contact surfaces of the cylinder block and oil pan.

34. REMOVE CRANK POSITION SENSOR

(a) Disconnect the crank position sensor connector.
(b) Remove the bolt and crank position sensor.

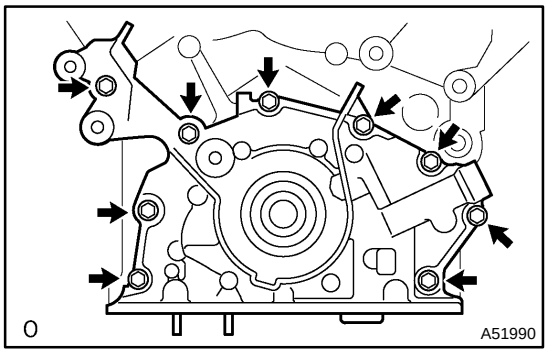

35. REMOVE OIL PUMP ASSY

(a) Remove the 9 bolts, O–ring and oil pump.

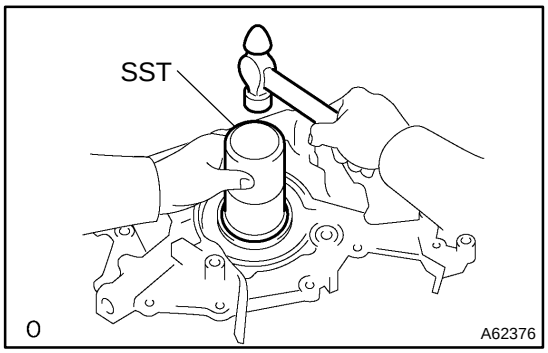

36. INSTALL OIL PUMP ASSY

(a) Using SST and a hammer, tap in a new oil seal until its surface is flush with the oil pump body edge.
SST 09223–00010

NOTICE:

Be careful not to tap the oil seal slantingly.

(b) Apply a small amount of MP grease to the oil seal lip.

NOTICE:

Keep the lip off foreign materials.

(c) Apply engine oil to the O–ring.

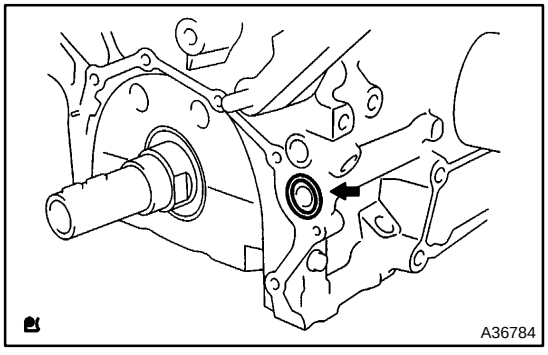

(d) Install a new O–ring on the cylinder block.

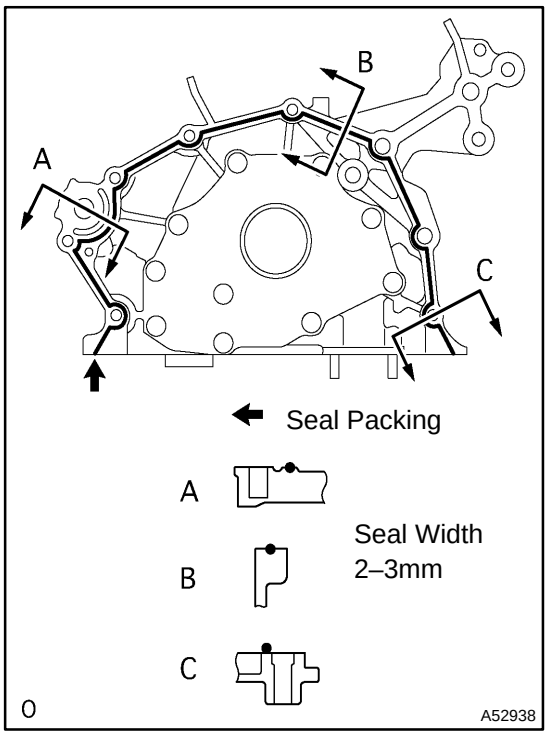

(e) Apply seal packing to the oil pump assembly as shown in the illustration.

Seal packing: Part No. 08226–00080 or equivalent.

NOTICE:

- **Install the oil pump assembly within 3 minutes after applying seal packing.**
- **Do not put into engine oil within 2 hours after installing.**

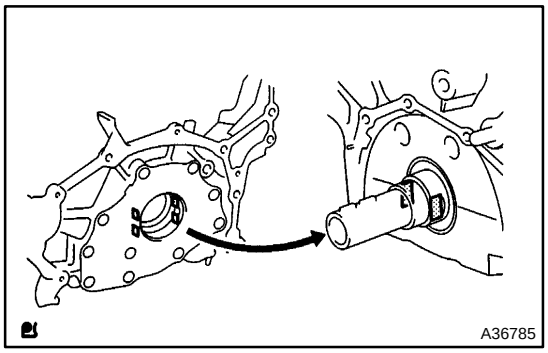

(f) Engage the spline teeth of the oil pump drive gear with the large teeth of the crankshaft, and slide the oil pump on the crankshaft.

(g) Install the oil pump with the 9 bolts. Uniformly tighten the bolts in several passes.

Torque:
10 mm head 8 N·m (82 kgf·cm, 71 in.·lbf)
12 mm head 20 N·m (199 kgf·cm, 14 ft·lbf)
14 mm head 43 N·m (439 kgf·cm, 32 ft·lbf)

37. INSTALL CRANK POSITION SENSOR

Torque: 8 N·m (82 kgf·cm, 71 in.·lbf)

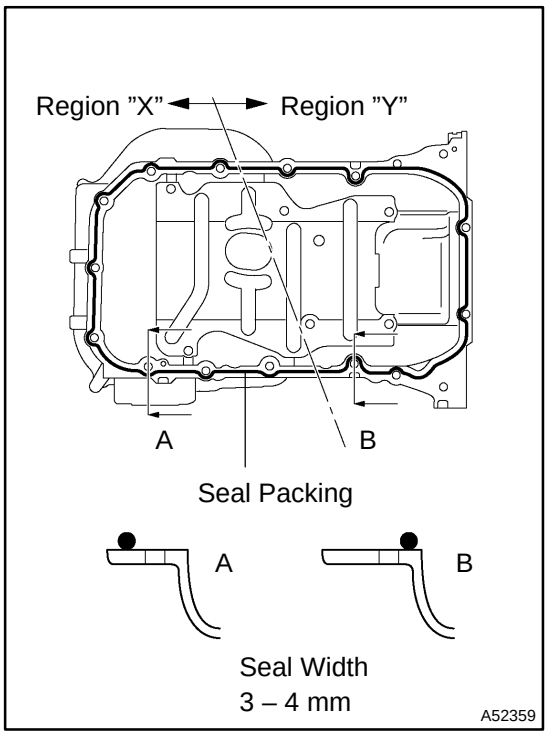

38. INSTALL OIL PAN SUB–ASSY

(a) Apply seal packing to the oil pan as shown in the illustration.
Seal packing: Part No. 08226–00080 or equivalent.

NOTICE:

- **Remove any oil from the contact surface.**
- **Apply seal packing to the outer side of the bolt hole in the region ”X”.**
- **Apply seal packing to the inner side of the bolt hole in the region ”Y”.**
- **Install the oil pan within 3 minutes after applying seal packing.**
- **Do not put into engine oil within 2 hours after installing.**

(b) Install the oil pan with the 17 bolts and 2 nuts.
Torque:
10 mm head 8 N·m (82 kgf·cm, 71 in.·lbf)
12 mm head 20 N·m (199 kgf·cm, 14 ft·lbf)

39. INSTALL OIL STRAINER SUB–ASSY

(a) Install a new gasket and the oil strainer with the bolt and 2 nuts.
Torque: 8 N·m (82 kgf·cm, 71 in.·lbf)

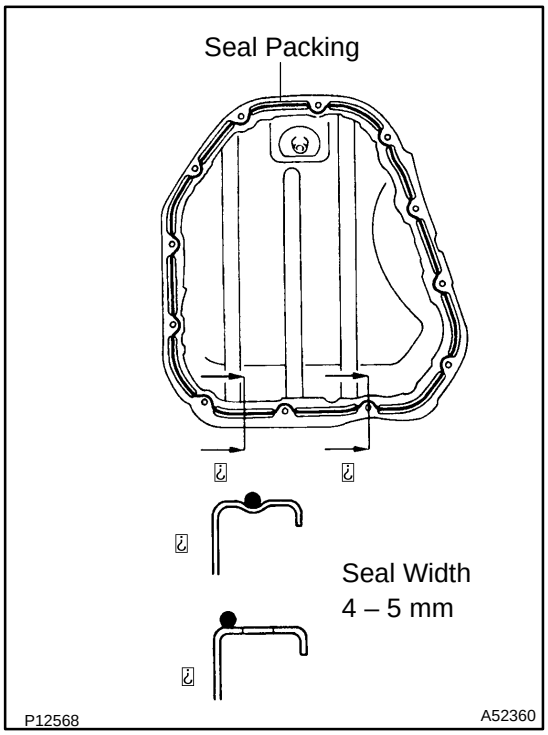

40. INSTALL OIL PAN SUB–ASSY NO.2

(a) Apply seal packing to the oil pan as shown in the illustration.
Seal packing: Part No. 08226–00080 or equivalent.

NOTICE:

Apply seal packing to the inner side of the bolt hole.

(b) Install oil pan No. 2.
Torque: 8 N·m (82 kgf·cm, 71 in.·lbf)

NOTICE:

- **Remove any oil from the contact surface.**
- **Do not put into engine oil within 2 hours after installing.**

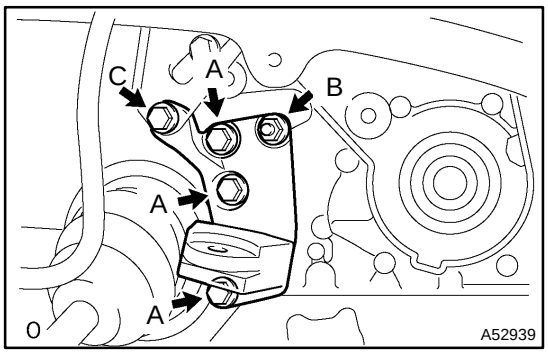

41. INSTALL TRANSVERSE ENGINE ENGINE MOUNTING BRACKET

Torque:
Bolt A 54 N·m (550 kgf·cm, 40 ft·lbf)
Nut B 54 N·m (550 kgf·cm, 40 ft·lbf)
Bolt C 43 N·m (439 kgf·cm, 32 ft·lbf)

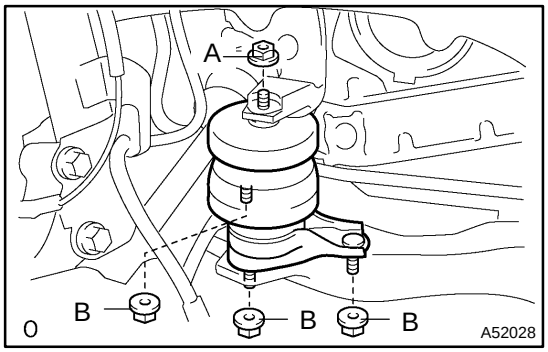

42. INSTALL TRANSVERSE ENGINE ENGINE MOUNTING INSULATOR

Torque:
Nut A 95 N·m (969 kgf·cm, 70 ft·lbf)
Nut B 87 N·m (887 kgf·cm, 64 ft·lbf)

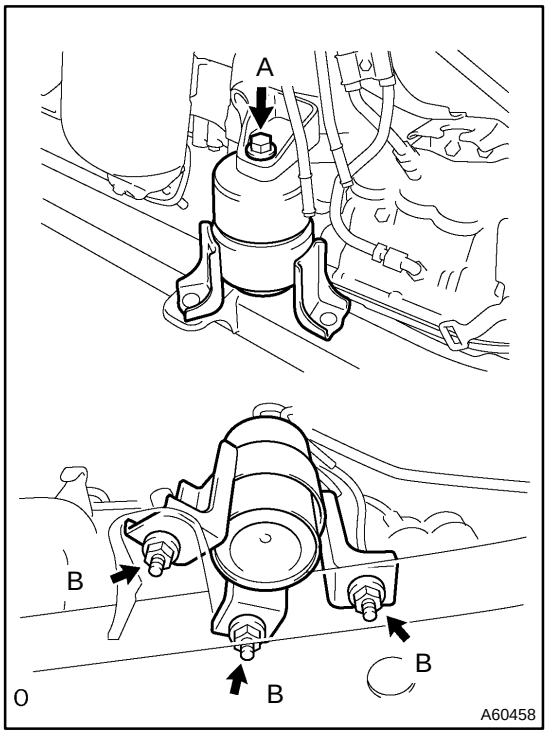

43. INSTALL TRANSVERSE ENGINE ENGINE MOUNTING INSULATOR

Torque:
Bolt A 87 N·m (887 kgf·cm, 64 ft·lbf)
Nut B 52 N·m (531 kgf·cm, 38 ft·lbf)

44. INSTALL OIL LEVEL GAGE GUIDE

(a) Install a new O–ring, bolt and oil level gage guide.
Torque: 8 N·m (82 kgf·cm, 71 in.·lbf)

45. INSTALL COMPRESSOR MOUNTING BRACKET NO.1

Torque: 25 N·m (250 kgf·cm, 18 ft·lbf)

46. INSTALL TIMING BELT NO.3 COVER
(See page 14–212)

47. INSTALL TIMING BELT IDLER SUB–ASSY NO.1

(a) Using a 10 mm hexagon wrench, install the plate washer and idler pulley with the pivot bolt.
Torque: 34 N·m (347 kgf·cm, 25 ft·lbf)

48. INSTALL TIMING BELT IDLER SUB–ASSY NO.2
(See page 16–21)

49. INSTALL CAMSHAFT TIMING PULLEY
(See page 14–212)
SST 09960–10010 (09962–01000, 09963–01000)

50. INSTALL COMPRESSOR AND MAGNETIC CLUTCH
Torque: 25 N·m (250 kgf·cm, 18 ft·lbf)

51. INSTALL EXHAUST PIPE SUPPORT BRACKET NO.1
(See page 14–155)

52. INSTALL EXHAUST PIPE ASSY FRONT
(See page 15–5)

53. INSTALL EXHAUST PIPE NO.1 SUPPORT BRACKET
(See page 15–5)

54. INSPECT TIMING BELT
(See page 14–206)

55. INSTALL TIMING BELT
(See page 14–243)
SST 09960–10010 (09962–01000, 09963–01000)

56. INSTALL CHAIN TENSIONER ASSY NO.1
(See page 14–206)

57. INSTALL TIMING BELT GUIDE NO.2

58. INSTALL TRANSVERSE ENGINE ENGINE MOUNTING BRACKET

59. INSTALL TIMING BELT NO.2 COVER
(See page 14–206)

60. INSTALL TIMING BELT NO.1 COVER

61. INSTALL CRANKSHAFT PULLEY
(See page 14–206)
SST 09213–54015 (91651–60855), 09330–00021

62. INSTALL GENERATOR BRACKET NO.2

Torque: 28 N·m (286 kgf·cm, 21 in.·lbf)

63. INSTALL ENGINE MOUNTING STAY NO.2 RH
(See page 14–155)

64. INSTALL ENGINE MOVING CONTROL ROD
(See page 14–155)

65. INSTALL VANE PUMP V BELT
(See page 14–140)

66. INSTALL V (COOLER COMPRESSOR TO CRANKSHAFT PULLEY) BELT NO.1
(See page 14–140)

67. INSPECT DRIVE BELT DEFLECTION AND TENSION(REFERENCE) (See page 14–136)

68. INSTALL FRONT SUSPENSION UPPER BRACE CENTER (W/ FRONT SUSPENSION BRACE UPPER CENTER)

Torque: 80 N·m (816 kgf·cm, 59 ft·lbf)

69. ADD ENGINE OIL

70. INSPECT OIL LEAK

71. INSTALL FRONT WHEEL RH

Torque: 103 N·m (1,051 kgf·cm, 76 ft·lbf)

72. CHECK EXHAUST GAS LEAK

1701I–02

OVERHAUL

1. REMOVE OIL PUMP RELIEF VALVE

(a) Remove the plug, spring and relief valve.

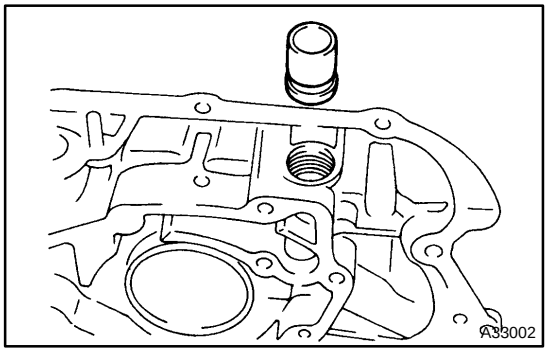

2. INSPECT OIL PUMP RELIEF VALVE

(a) Apply a light coat of engine oil.
(b) Check that it falls smoothly into the valve hole by its own weight.

3. INSPECT OIL PUMP ASSY

(a) Remove the oil pump cover.
  (1) Remove the 10 screws and the oil pump cover.
(b) Remove oil pump rotor set.

NOTICE:
Do not change the combination and install direction of the two rotors.

(c) Inspect oil pump rotor set.
  (1) Apply a light coat of engine oil to the oil pump rotor set and place them into the oil pump body. Check that the rotors revolve smoothly.

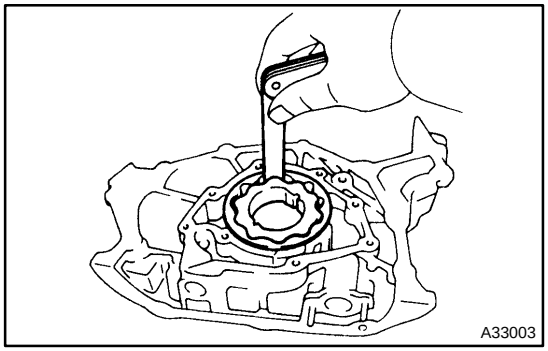

(d) Inspect rotor tip clearance.
  (1) Using a feeler gauge, measure the clearance between the drive and driven rotor tips.
  Standard tip clearance:
  0.11 – 0.24 mm (0.0043 – 0.0094 in.)
  Maximum tip clearance: 0.35 mm (0.0138 in.)

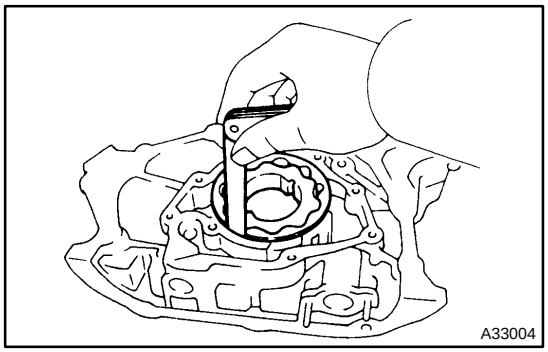

(e) Inspect rotor body clearance.
  (1) Using a feeler gauge, measure the clearance between the driven rotor and body.
  Standard body clearance:
  0.125 – 0.162 mm (0.0050 – 0.0064 in.)
  Maximum body clearance: 0.30 mm (0.0118 in.)

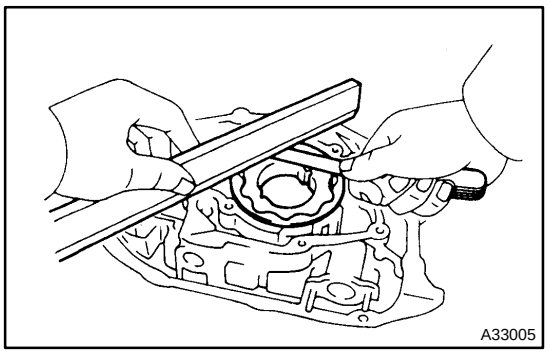

(f) Inspect rotor side clearance.
(1) Using a feeler gauge and precision straight edge, measure the clearance between the rotors and precision straight edge.
Standard side clearance:
0.03 – 0.09 mm (0.0012 – 0.0035 in.)
Maximum side clearance: 0.15 mm (0.0059 in.)

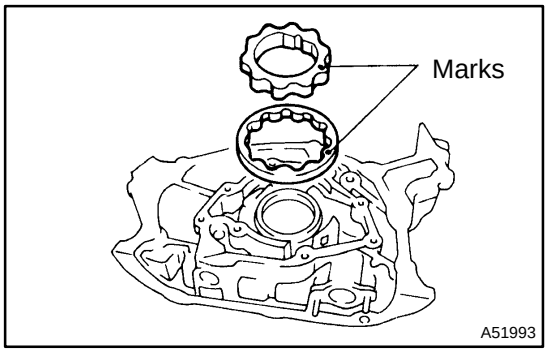

(g) Install oil pump rotor set.
(1) Apply a light coat of engine oil to the oil pump gear set and place it into pump body with the marks facing the pump body cover side.
(h) Install oil pump cover.
(1) Install the 10 screws and oil pump cover.
Torque: 10 N·m (105 kgf·cm, 8 ft·lbf)

4. INSTALL OIL PUMP RELIEF VALVE

(a) Apply a light coat of engine oil to the relief valve, and insert the relief valve and spring into the pump body hole.
(b) Install the oil pump relief valve plug.
Torque: 24 N·m (245 kgf·cm, 18 ft·lbf)

OIL FILTER SUB–ASSY (1MZ–FE)

1701H–02

REPLACEMENT

1. REMOVE ENGINE UNDER COVER RH

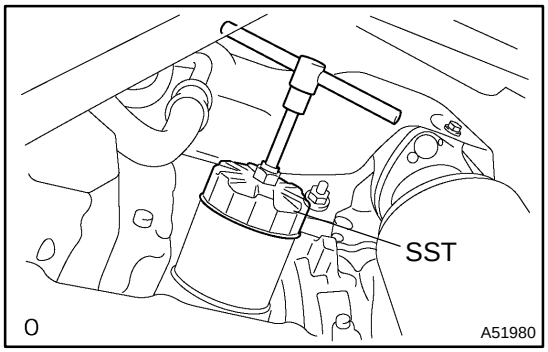

2. REMOVE OIL FILTER SUB–ASSY

(a) Using SST, remove the oil filter.
SST 09228–07501

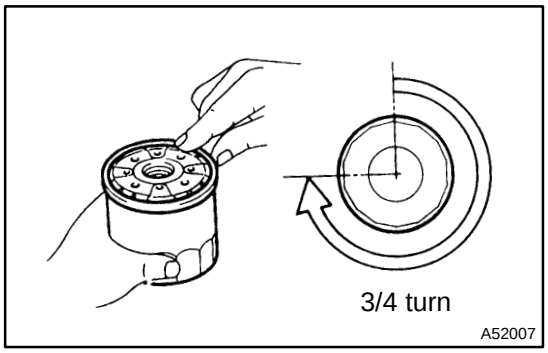

3. INSTALL OIL FILTER SUB–ASSY

(a) Check and clean the oil filter installation surface.
(b) Apply clean engine oil to the gasket of a new oil filter.
(c) Lightly screw the oil filter into place, and tighten it until the gasket contacts the seat.
(d) Using SST, tighten it an additional 3/4 turn.
SST 09228–07501

4. ADD ENGINE OIL

(a) Add new oil.
Oil capacity:
Drain and refill w/ oil filter change 4.7 liters (5.0 US qts, 4.1 lmp. qts)
Drain and refill w/o oil filter change 4.5 liters (4.8 US qts, 4.0 lmp. qts)
Dry fill 5.5 liters (5.8 US qts, 4.8 lmp. qts)
(b) Install the oil filler cap.

5. INSPECT OIL LEAK

IGNITION SYSTEM (2AZ–FE)

18015–02

ON–VEHICLE INSPECTION

NOTICE:

"Cold" and "Hot" in these sentences express the temperature of the coils themselves."Cold" is from –10°C (14°F) to 50°C (122°F) and "Hot" is from 50°C (122°F) to 100°C (212°F).

1. INSPECT IGNITION COIL (WITH IGNITER) AND SPARK TEST

(a) Confirm DTC.

NOTICE:

If DTC is indicated, carry out troubleshooting in accordance with the procedure on the following DTC.

HINT:

See page 05–16

(b) Check that the spark occurs.

(1) Remove the cylinder head cover No.2.
(2) Remove the ignition coils (with igniter).
(3) Using a 16 mm (0.63 in) plug wrench, remove the all spark plugs.
(4) Install the spark plugs to each ignition coils (with igniter), and connect the ignition coil connectors.
(5) Disconnect the all injector connectors.
(6) Ground the spark plugs.
(7) Check if spark occurs while engine is being cranked.

NOTICE:

- **Be sure to ground the spark plug, when checking.**
- **Replace the ignition coil when it is given an impact.**
- **Do not crank the engine for more than 2 seconds.**

If the spark does not occur, do the test as follow.

(c) Using a 16 mm (0.63 in.) plug wrench, install the spark plugs.
Torque: 19 N·m (194 kgf·cm, 14 ft·lbf)

(d) Install the ignition coil with igniter.
Torque: 9.0 N·m (92 kgf·cm, 80 in.·lbf)

INSPECTION

1. SPARK PLUG

NOTICE:
Try not to clean the irridium and platinum tip. However, when the cleaning is necessary, use of spark plug cleaner is recommended. Duration should be less than 20 seconds.

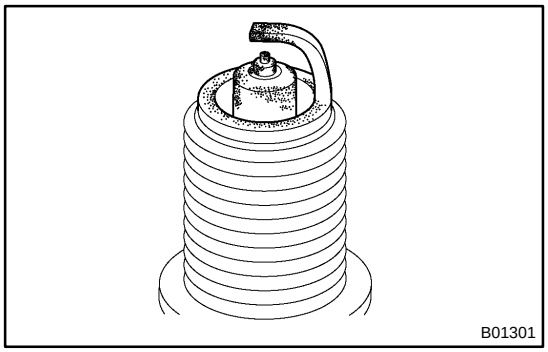

(a) Check the spark plug for thread damage and insulator damage.

If abnormal, replace the spark plug.

Recommended spark plug:
DENSO MADE SK20R11
NGK MADE IFR6A11

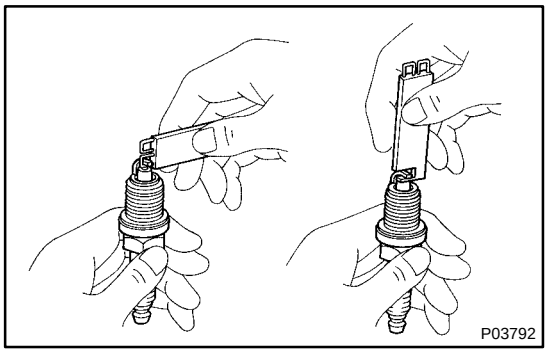

(b) Check the electrode gap.
Electrode gap: 1.0 – 1.1 mm (0.039 – 0.043 in.)
Maximum electrode gap: 1.3 mm (0.051 in.)

NOTICE:
- **This engine is fitted with irridium–tipped spark plugs. Never attempt to adjust the electrode gap.**
- **Do not scratch the irridium and platinum tip between electrode gap.**

2. CAMSHAFT POSITION SENSOR

(a) Using an ohmmeter, measure the resistance between terminals.
RESISTANCE:
at cold 835 – 1,400 Ω
at hot 1,060 – 1,645 Ω

NOTICE:
"Cold" and "Hot" on the table express the temperature of the coils themselves."Cold" is from –10°C (14°F) to 50°C (122°F) and "Hot" is from 50°C (122°F) to 100°C (212°F).

3. CRANK POSITION SENSOR

(a) Using an ohmmeter, measure the resistance between terminals.
RESISTANCE:
at cold 985 – 1,600 Ω
at hot 1,265 – 1,890 Ω

NOTICE:
"Cold" and "Hot" on the table express the temperature of the coils themselves."Cold" is from –10°C (14°F) to 50°C (122°F) and "Hot" is from 50°C (122°F) to 100°C (212°F).

IGNITION SYSTEM (1MZ–FE)

18013–02

ON–VEHICLE INSPECTION

NOTICE:

"Cold" and "Hot" in these sentences express the temperature of the coils themselves."Cold" is from –10°C (14°F) to 50°C (122 °F) and "Hot" is from 50°C (122°F) to 100 °C (212°F).

1. INSPECT IGNITION COIL AND SPARK TEST

(a) Confirm DTC.

NOTICE:

If DTC is indicated, carry out troubleshooting in accordance with the procedure on the following DTC.

HINT:

See page 05–190

(b) Check that the spark occurs.

(1) Remove the intake air surge tank (See page 14–142)

(2) Remove the ignition coils.

(3) Using a 16 mm (0.63 in) plug wrench, remove the all spark plugs.

(4) Install the spark plugs to each ignition coils and connect the ignition coil connectors.

(5) Disconnect the all injector connectors.

(6) Ground the spark plugs.

(7) Check if spark occurs while engine is being cranked.

NOTICE:

- **Be sure to ground the spark plug, when checking.**
- **Replace the ignition coil when it is given an impact.**
- **Do not crank the engine for more than 2 seconds.**

If the spark does not occur, do the test as follow.

(c) Using a 16 mm (0.63 in.) plug wrench, install the spark plugs.

Torque: 18 N·m (184 kgf·cm, 13 ft·lbf)

(d) Install the ignition coils.

Torque: 8.0 N·m (82 kgf·cm, 71 in.·lbf)

INSPECTION

1. SPARK PLUG

NOTICE:
Try not to clean the irridium and platinum tip. However, when the cleaning is necessary, use of spark plug cleaner is recommended. Duration should be less than 20 seconds.

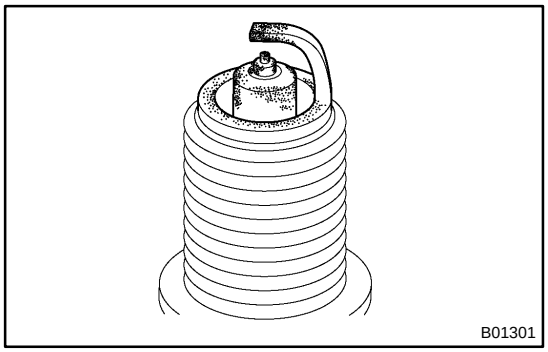

(a) Check the spark plug for thread damage and insulator damage.

If abnormal, replace the spark plug.

Recommended spark plug:
DENSO MADE SK20R11
NGK MADE IFR6A11

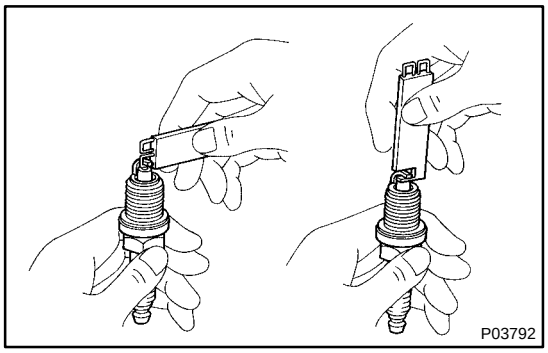

(b) Check the electrode gap.
Electrode gap: 1.0 – 1.1mm (0.039 – 0.043 in.)
Maximum electrode gap: 1.2 mm (0.047 in.)

NOTICE:

- **This engine is fitted with irridium–tipped spark plugs. Never attempt to adjust the electrode gap.**
- **Do not scratch the irridium and platinum tip between electrode gap.**

2. CAMSHAFT POSITION SENSOR

(a) Using an ohmmeter, measure the resistance between terminals.
RESISTANCE:
at cold 835 – 1,400 Ω
at hot 1,060 – 1,645 Ω

NOTICE:
"Cold" and "Hot" on the table express the temperature of the coils themselves."Cold" is from –10°C (14°F) to 50°C (122°F) and "Hot" is from 50°C (122°F) to 100°C (212°F).

3. CRANK POSITION SENSOR

(a) Using an ohmmeter, measure the resistance between terminals.
RESISTANCE:
at cold 1,630 – 2,740 Ω
at hot 2,065 – 3,225 Ω

NOTICE:
"Cold" and "Hot" on the table express the temperature of the coils themselves."Cold" is from –10°C (14°F) to 50°C (122°F) and "Hot" is from 50°C (122°F) to 100°C (212°F).

STARTING SYSTEM (2AZ–FE)

1902L–02

INSPECTION

1. STARTER ASSY

NOTICE:
These tests must be done within 3 to 5 seconds to avoid burning out the coil.

(a) Disconnect the field coil lead wire from terminal C.

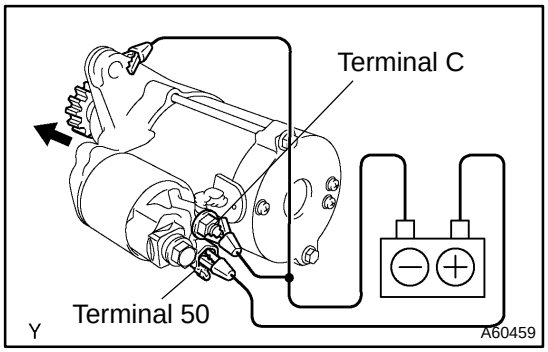

(b) Connect the battery to the magnetic switch as shown. Check that the clutch pinion gear moves outward.

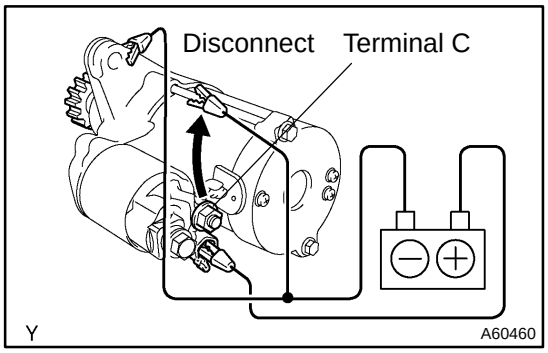

(c) With battery connected as above with the clutch pinion gear out, disconnect the negative (–) lead from terminal C. Check that the pinion gear remains out.

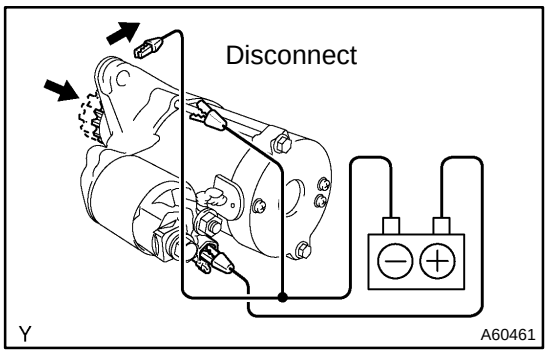

(d) Disconnect the negative (–) lead from the switch body. Check that the clutch pinion gear returns inward.

(e) Connect the lead wire to the terminal C with the nut.
Torque: 5.9 N·m (60 kgf·cm, 52 in.·lbf)

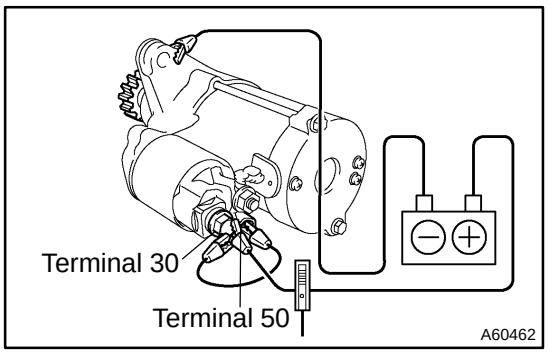

(f) Connect the battery and ammeter to the starter as shown.
(g) Check that the starter rotates smoothly and steadily with the pinion gear moving out. Check that the ammeter shows the specified current.
Specified current: 90 A or less at 11.5 V

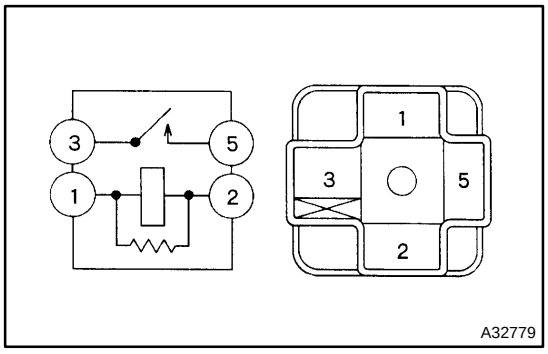

2. STARTER RELAY ASSY

(a) Inspect the relay continuity.
(1) Using an ohmmeter, check that there is continuity between terminals 1 and 2.

If there is no continuity, replace the relay.

(2) Check that there is no continuity between terminals 3 and 5.

If there is continuity, replace the relay.

(b) Inspect the relay operation.
(1) Apply battery positive voltage across terminals 1 and 2.
(2) Using an ohmmeter, check that there is continuity between terminals 3 and 5.

If there is no continuity, replace the relay.

STARTER ASSY (2AZ–FE)

1902M–02

REPLACEMENT

1. **REMOVE BATTERY**
2. **REMOVE AIR CLEANER ASSY**
3. **REMOVE AIR CLEANER BRACKET**
4. **REMOVE AIR CLEANER INLET ASSY**

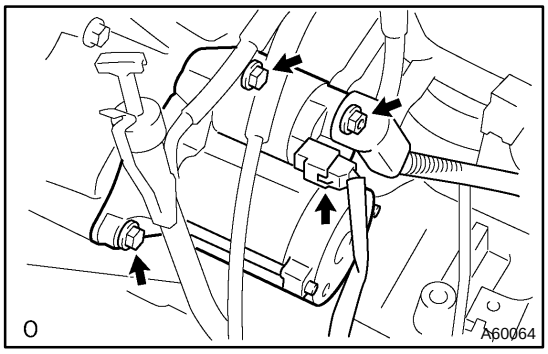

5. **REMOVE STARTER ASSY**

(a) Disconnect the starter connector.
(b) Remove the nut and disconnect the terminal 30.
(c) Remove 2 bolts and starter.

6. **INSTALL STARTER ASSY**

Torque:
Bolt 39 N·m (398 kgf·cm, 29 ft·lbf)
Terminal 30 13 N·m (130 kgf·cm, 9 ft·lbf)

7. **INSTALL AIR CLEANER INLET ASSY**
8. **INSTALL AIR CLEANER BRACKET**
9. **INSTALL AIR CLEANER ASSY**
10. **INSTALL BATTERY**

1908U–01

COMPONENTS

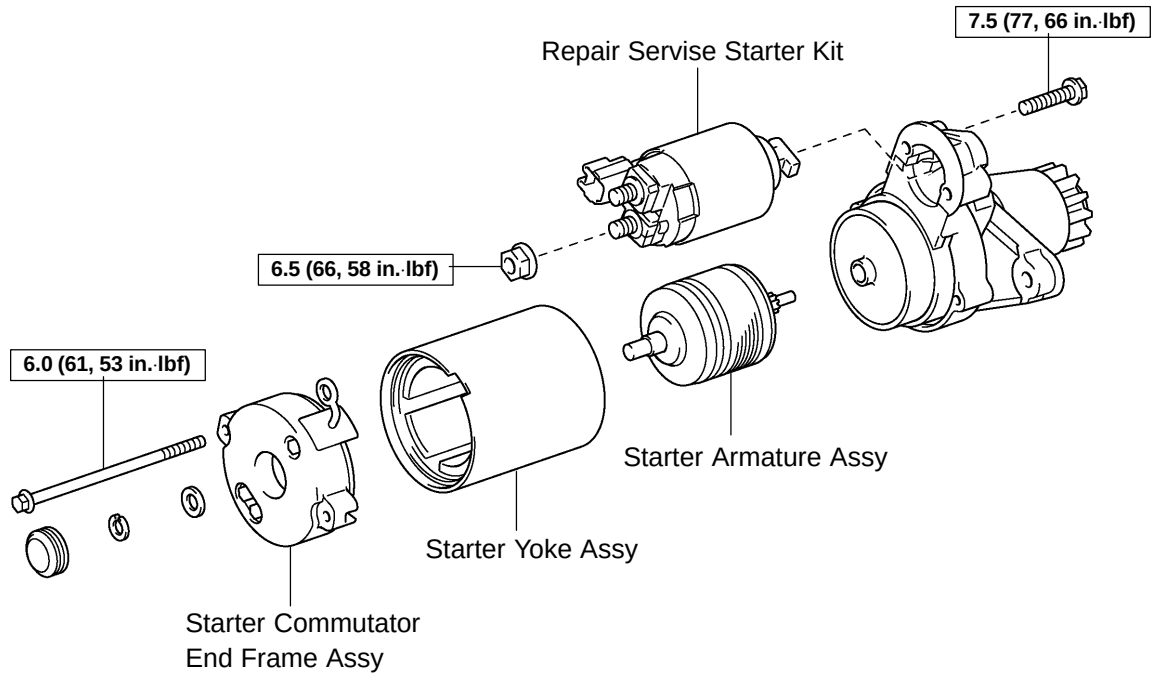

N·m (kgf·cm, ft·lbf): Specified torque

O

A59593

OVERHAUL

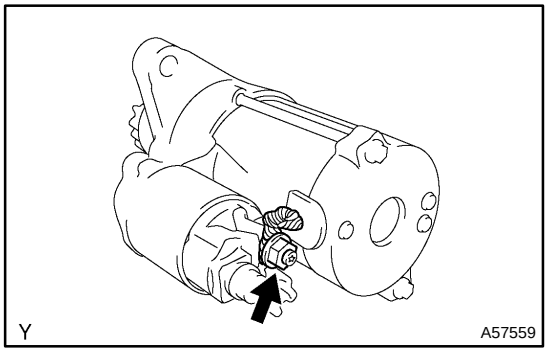

1. REMOVE REPAIR SERVICE STARTER KIT

(a) Remove the nut, and disconnect the lead wire from the repair service starter kit.

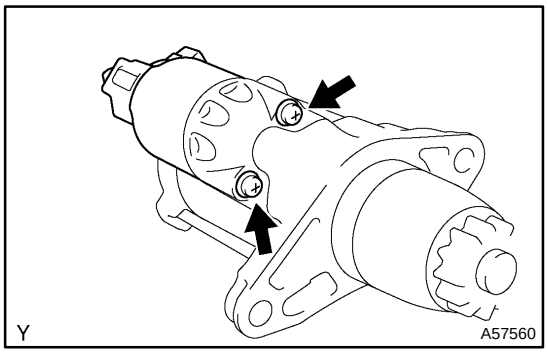

(b) Remove the 2 screws holding the repair service starter kit to the starter housing.
(c) Remove the repair service starter kit.
(d) Remove the return spring and plunger.

2. REMOVE STARTER COMMUTATOR END FRAME ASSY

(a) Using a screwdriver, remove the starter commutator end frame cover.
(b) Using snap ring pliers, remove the snap ring and plate washer.

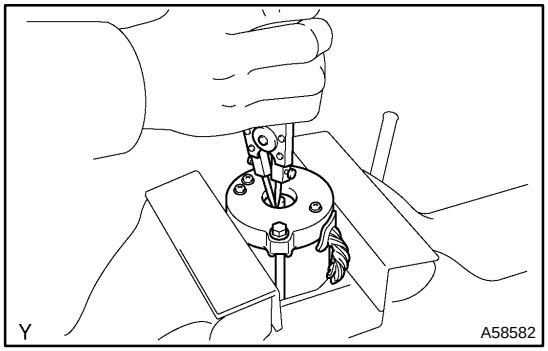

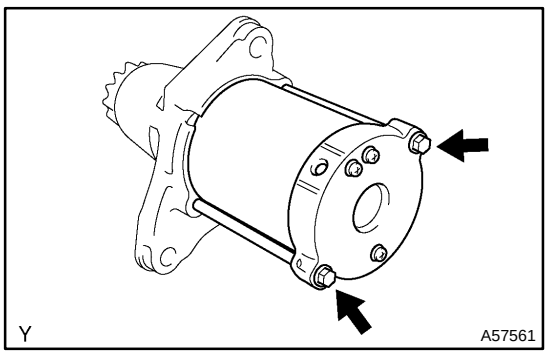

(c) Remove the 2 through bolts, and pull out the starter yoke assy together with the commutator end frame assy.

3. REMOVE STARTER ARMATURE ASSY

(a) Remove the starter armature assy from starter yoke assy.

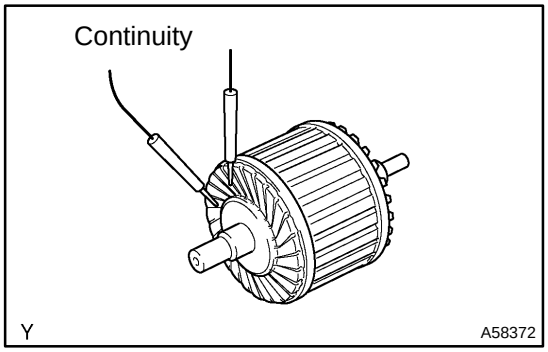

4. INSPECT STARTER ARMATURE ASSY

(a) Check the commutator for open circuit.
  (1) Using an ohmmeter, check that there is continuity between the segments of the commutator.

If there is no continuity between any segments, replace the armature.

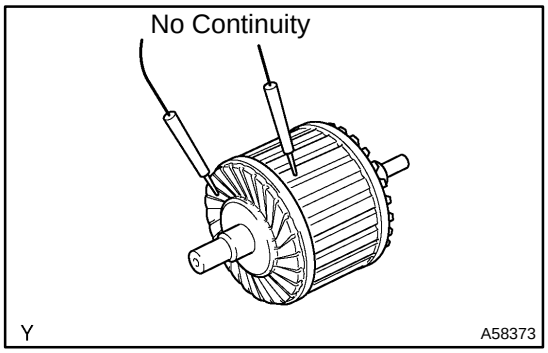

(b) Check the commutator for ground.
  (1) Using an ohmmeter, check that there is no continuity between the commutator and armature coil core.

If there is continuity, replace the armature.

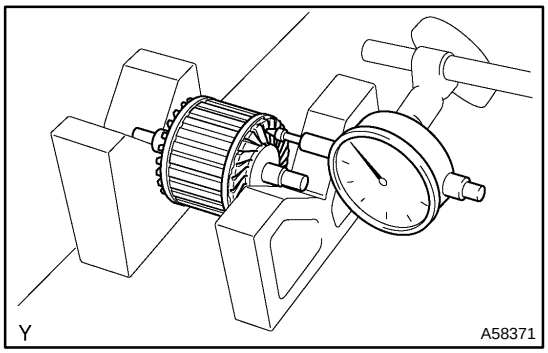

(c) Check the commutator for dirty and burn on surface.

If the surface is dirty or burnt, correct it with sandpaper (No.400) or a lathe.

(d) Check for the commutator circuit runout.
  (1) Place the commutator on V–blocks.
  (2) Using a dial indicator, measure the circle runout.
  Standard circle runout: 0.02 mm (0.0008 in.)
  Maximum circle runout: 0.05 mm (0.0020 in.)

If the circle runout is greater than maximum, replace the armature.

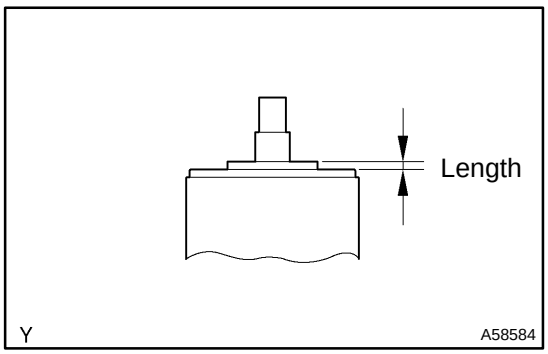

(e) Using vernier calipers, measure the commutator length.
  Standard length: 3.3 mm (0.130 in.)
  Maximum length: 4.0 mm (0.158 in.)

If the length is greater than maximum, replace the armature.

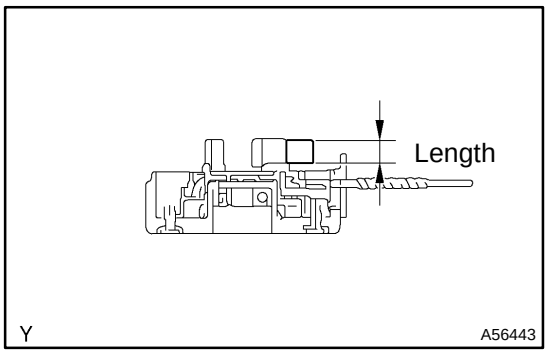

5. INSPECT STARTER COMMUTATOR END FRAME ASSY

(a) Using vernier calipers, measure the brush holder length.
Standard length: 9.0 mm (0.359 in.)
Maximum length: 4.0 mm (0.158 in.)

If the length is less than minimum, replace the starter commutator end frame assy.

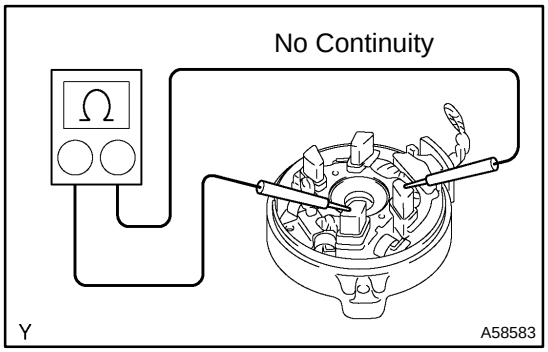

(b) Check the brush holder.
(1) Using an ohmmeter, check that there is no continuity between the positive (+) and negative (–) brush holders.

If the there is continuity repair or replace the starter commutator end frame assy.

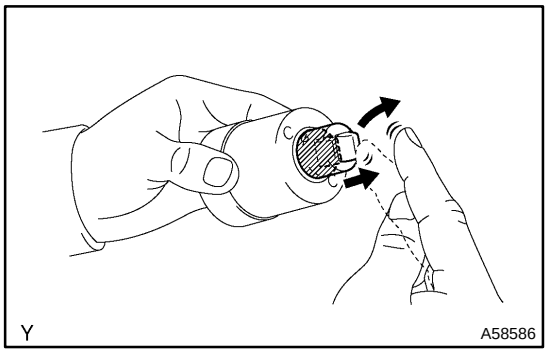

6. INSPECT REPAIR SERVICE STARTER KIT

(a) Check the plunger.
(1) Push in the plunger and check that it returns quickly to its original position.

If necessary, replace the repair service starter kit.

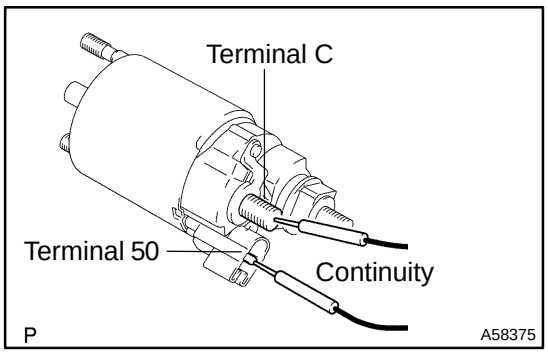

(b) Check the pull–in coil for open circuit.
(1) Using an ohmmeter, check that there is continuity between terminals 50 and C.

If there is no continuity, replace the repair service starter kit.

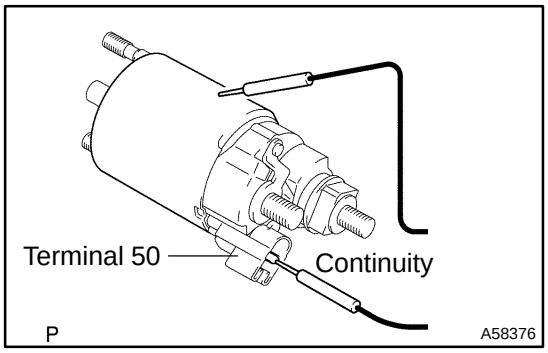

(c) Check whether the hold–in coil has an open circuit.
(1) Using an ohmmeter, check that there is continuity between terminal 50 and the switch body.

If there is no continuity, replace the repair service kit.

7. INSTALL STARTER ARMATURE ASSY

(a) Apply grease to the washer plate and armature shaft.
(b) Install the armature shaft to the starter commutator end frame assy.
(c) Using snap ring pliers, install the plate washer and new snap ring.

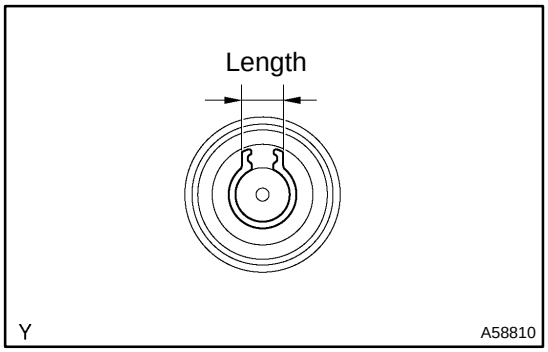

(d) Using vernier calipers, mesure the snap ring.
Maximum length: 5.0 mm (0.197 in.)

If the length is greater than maximum, replace the new snap ring.

8. INSTALL STARTER COMMUTATOR END FRAME ASSY

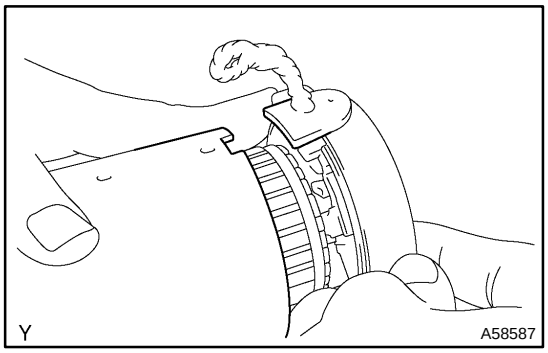

(a) Align the starter commutator rubber end frame with the cutout of starter yoke.
(b) Install starter yoke assy to starter commutator end frame.

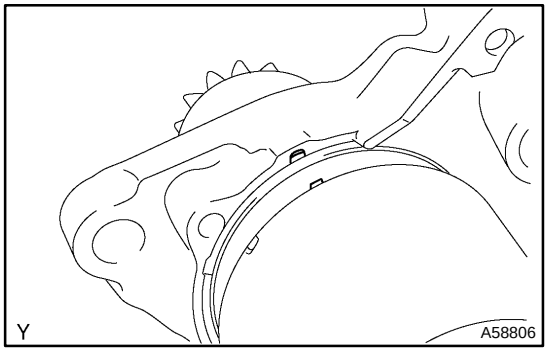

(c) Align the starer yoke assy with the cutout of motor terminal starter kit.

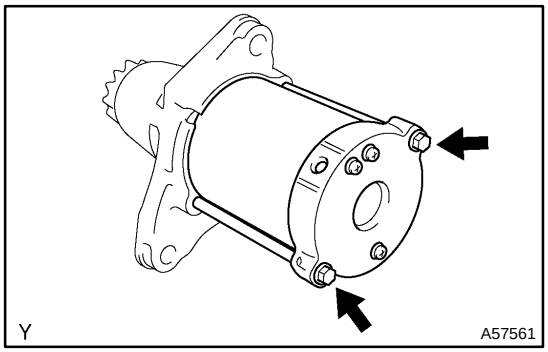

(d) Install the starter yoke assy with the 2 through bolts.
Torque: 6.0 N·m (61 kgf·cm, 53 in.·lbf)

(e) Install the starter commutator end frame cover.

9. INSTALL REPAIR SERVICE STARTER KIT

(a) Apply grease to the plunger and hook.
(b) Hang the plunger hook of the repair service starter kit to the drive lever.
(c) Install the plunger and return spring.

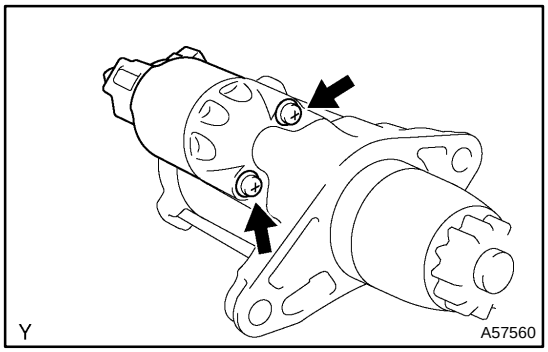

(d) Install the repair service starter kit with the 2 screws.
Torque: 7.5 N·m (77 kgf·cm, 66 in.·lbf)

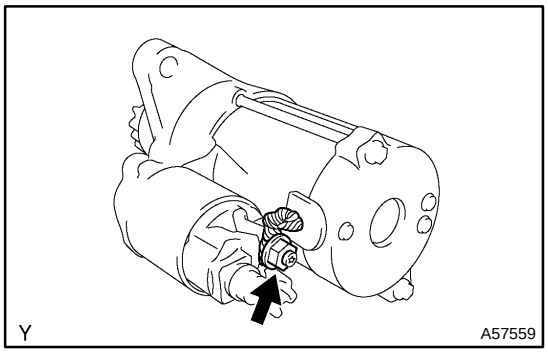

(e) Apply grease to the nut of the lead wire.
(f) Connect the lead wire to the terminal with the nut.
Torque: 6.5 N·m (66 kgf·cm, 58 in.·lbf)

CHARGING SYSTEM (2AZ–FE)

1902O–02

PRECAUTION

1. PRECAUTION

(a) Check that the battery cables are connected to the correct terminals.
(b) Disconnect the battery cables when the battery is given a quick charge.
(c) Do not perform tests with a high voltage insulation resistance tester.
(d) Never disconnect the battery while the engine is running.
(e) Check that the charging cable is tightened on terminal B of the alternator and the fuse box.
(f) Do not check whether the alternator generators or not with connecting terminal F to the other terminal.

ON–VEHICLE INSPECTION

1. CHECK BATTERY ELECTROLYTE LEVEL

(a) Check the electrolyte quantity of each cell

(1) If under the lower level, replace the battery (or add distilled water if possible) and check the charging system.

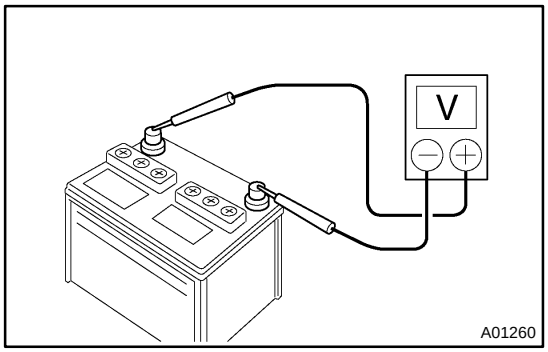

2. CHECK BATTERY VOLTAGE

(a) After having driven the vehicle and in the case that 20 minutes have not passed after having stopped the engine, turn the ignition switch ON and turn on the electrical system (headlight, blower motor, rear defogger etc.) for 60 seconds to remove the surface charge.

(b) Turn the ignition switch OFF and turn off the electrical systems.

(c) Measure the battery voltage between the negative (–) and positive (+) terminals of the battery.

Standard voltage: 12.5 – 12.9 V at 20°C (68°F)

If the voltage is less than specification, charge the battery.

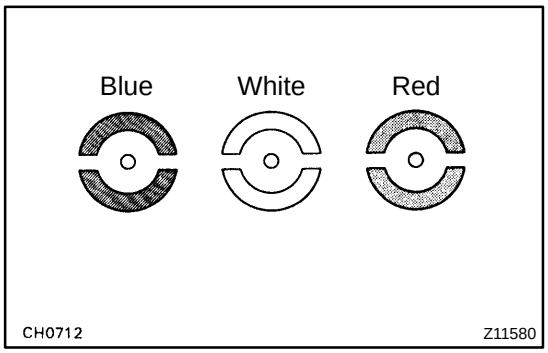

(d) Check the indicator as shown in the illustration.

HINT:

- Blue: OK
- White: Charging Necessary
- Red: Insufficient Water

3. CHECK BATTERY TERMINALS, FUSIBLE LINK AND FUSES

(a) Check that the battery terminals are not loose or corroded.

If the terminals are corroded, clean the terminals.

(b) Check the fusible link, H–fuses and fuses for continuity.

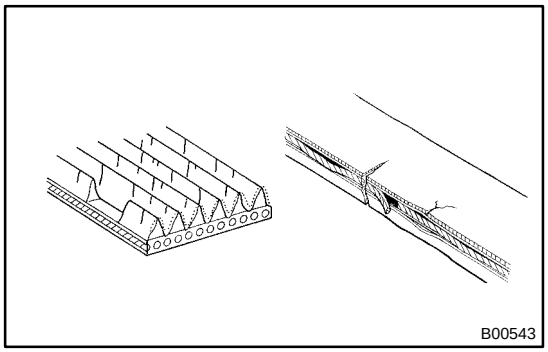

4. INSPECT DRIVE BELT

(a) Check the belt for wear and cracks etc.

If any defect has been found, replace the drive belt.

HINT:

- Replace the drive belt if the belt has worn out until the wire has been seen.
- Replace the drive belt if the cracks reached to the wire more than one place.
- Replace the drive belt if the belt has chunks missing from the ribs.

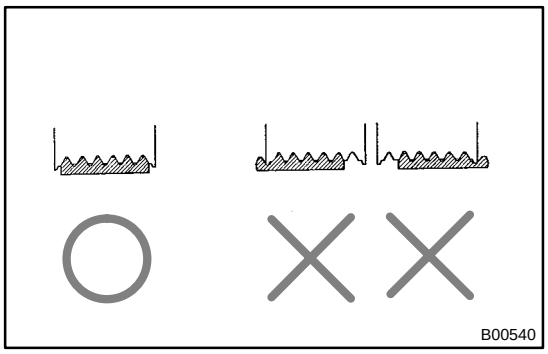

(b) Check that it fits properly in the ribbed grooves.

HINT:

Check with your hand to confirm that the belt has not slipped out of the groove on the bottom of the pulley.

5. VISUALLY CHECK ALTERNATOR WIRING

(a) Check that the wiring is in good condition.

6. LISTEN FOR ABNORMAL NOISES FROM ALTERNATOR

(a) Check that there is no abnormal noise from the alternator while the engine is running.

7. CHECK DISCHARGE WARNING LIGHT CIRCUIT

(a) Warm up engine and then turn it off.

(b) Switch off all accessories.

(c) Turn the ignition switch ON. Check that the discharge warning light is lit.

(d) Start the engine. Check that the light goes off.

If the light does not go off as specified, troubleshoot the charge warning light circuit.

8. INSPECT CHARGING CIRCUIT WITHOUT LOAD

HINT:

If a battery/alternator tester is available, connect the tester to the charging circuit as per manufacturer's instructions.

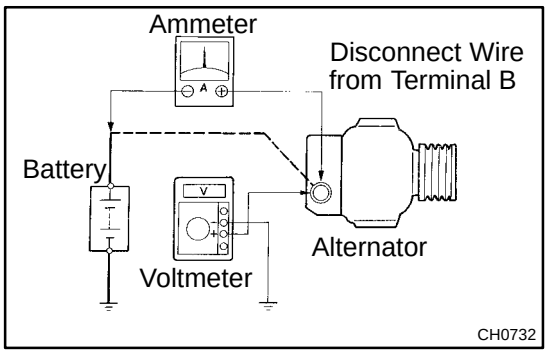

(a) If a tester is not available, connect a voltmeter to the charging circuit as follows.

(1) Disconnect the wire from terminal B of the alternator, and connect it to the negative (–) tester probe of the ammeter.

(2) Connect the positive (+) tester probe of the ammeter to terminal B of the alternator.

(3) Connect the positive (+) tester probe of the voltmeter to terminal B of the alternator.

(4) Ground the negative (–) tester probe of the voltmeter.

(b) Check the charging circuit as follows.

(1) With the engine running from idling to 2,000 rpm, check the reading on the ammeter and voltmeter.

Standard amperage: 10 A or less

Standard voltage: 13.2 – 14.8 V

9. INSPECT CHARGING CIRCUIT WITH LOAD

(a) With the engine running at 2,000 rpm, turn on the high beam headlights and place the heater blower switch at "HI".

(b) Check the reading on the ammeter.

Standard amperage: 30 A or more

If the ammeter reading is less than standard amperage, repair the alternator.

HINT:

If the battery is fully charged, the indication will sometimes be less than standard amperage.

GENERATOR ASSY (2AZ–FE)

1902Q–02

REPLACEMENT

1. REMOVE FAN AND GENERATOR V BELT
(See page 14–1)
SST 09249–63010

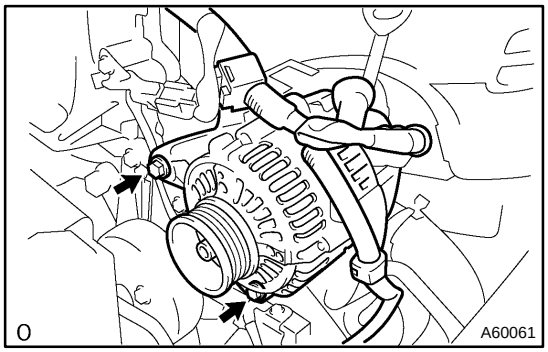

2. REMOVE GENERATOR ASSY

(a) Disconnect the engine wire as shown in the illustration.
(b) Remove 2 bolts and alternator assembly.

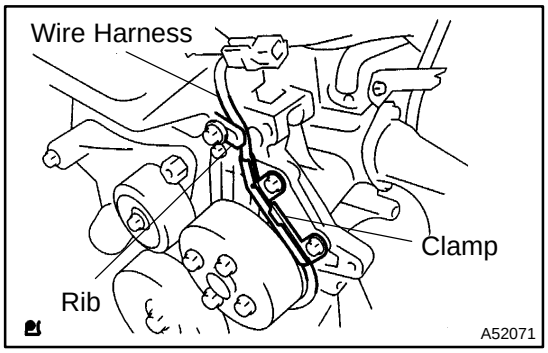

3. INSTALL GENERATOR ASSY

(a) Confirm the wire harness of the crank position sensor is placed as shown in the illustration.
(b) Install the alternator assembly.
Torque:
M8 21 N·m (214 kgf·cm, 15 ft·lbf)
M10 52 N·m (530 kgf·cm, 38 ft·lbf)
Wiring harness clamp 8.4 N·m (85 kgf·cm, 74 in.·lbf)
Alternator wire 9.8 N·m (100 kgf·cm, 7 ft·lbf)

NOTICE:
Be careful not to put the wire harness in when install the alternator.

4. INSTALL FAN AND GENERATOR V BELT
(See page 14–1)
SST 09249–63010

1908W–01

COMPONENTS

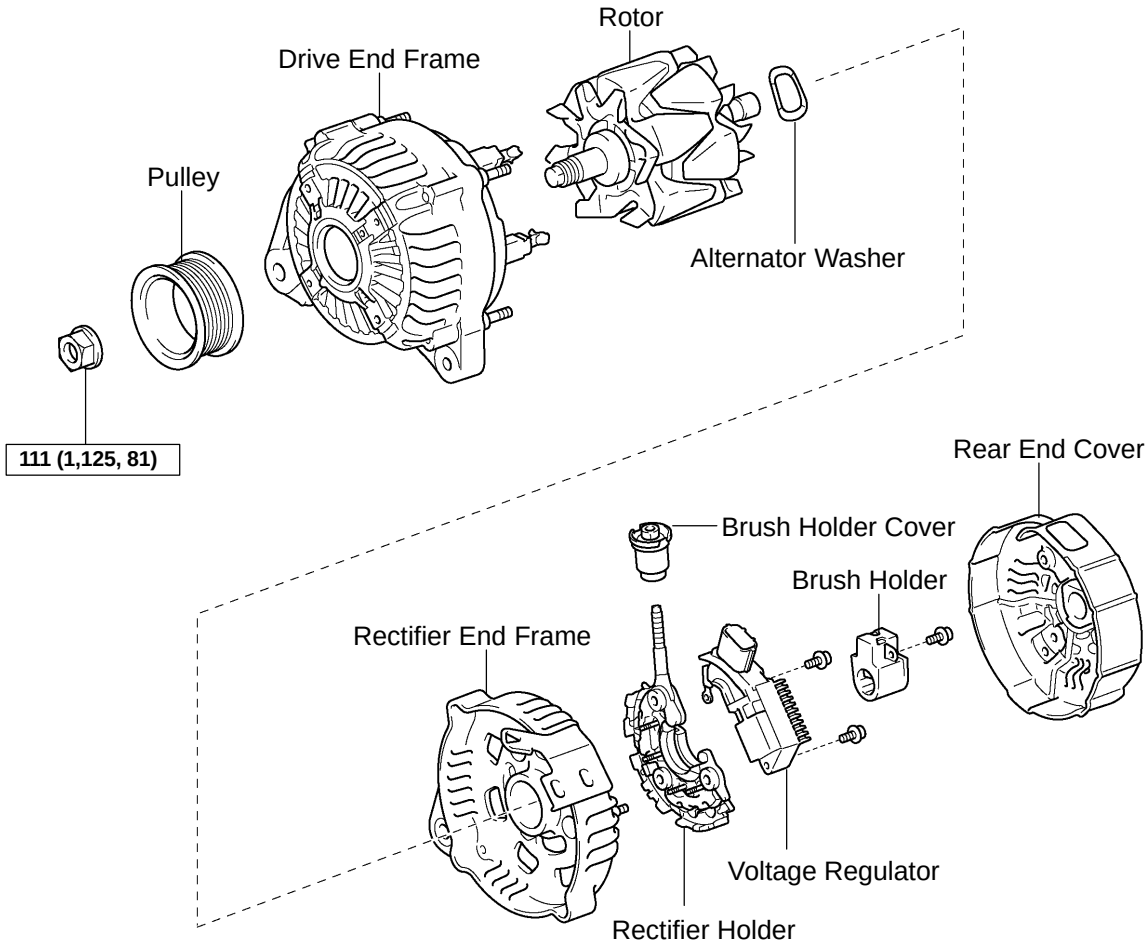

N·m (kgf·cm, ft·lbf): Specified torque

Y

A59147

OVERHAUL

1. REMOVE GENERATOR PULLEY

SST 09820–63010 (09820–06010, 09820–06020)

HINT:

SST1 – A, B	09820–06010
SST2	09820–06020

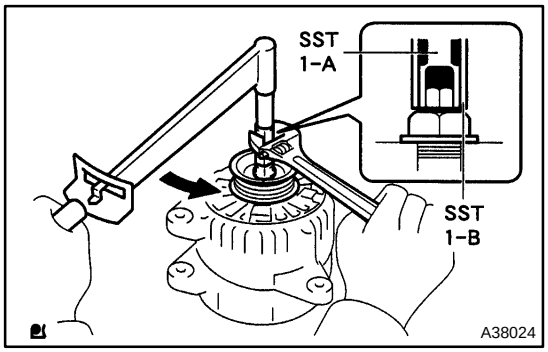

(a) Hold SST 1 – A with a torque wrench, and tighten SST 1 – B clockwise to the specified torque.
Torque: 39 N·m (400 kgf·cm, 29 ft·lbf)

NOTICE:
Check that SST is secured to the rotor shaft.

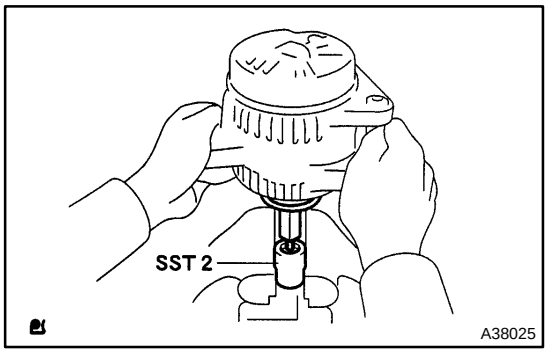

(b) Mount SST 2 in a vise.
(c) Insert SST 1 – A, B into SST 2, and attach the pulley nut to SST 2.

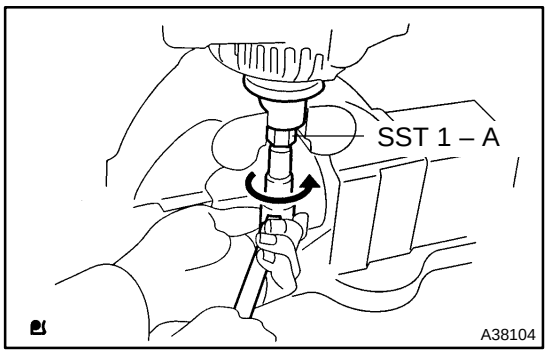

(d) To loosen the pulley nut, turn SST 1 – A in the direction shown in the illustration.

NOTICE:
To prevent damage to the rotor shaft, do not loosen the pulley nut more than one–half of a turn.

(e) Remove the alternator form SST 2.

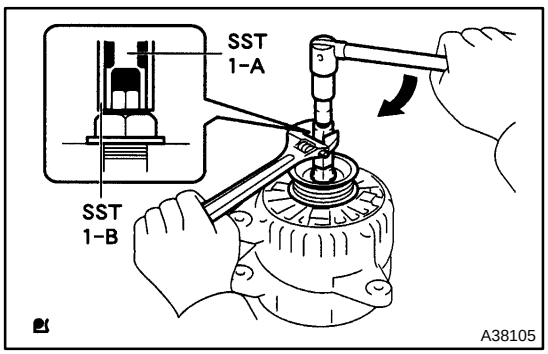

(f) Turn SST 1 – B, and remove SST 1 – A, B.
(g) Remove the pulley nut and pulley.

2. REMOVE GENERATOR BRUSH HOLDER ASSY

(a) Remove the nut and terminal insulator.
(b) Remove the bolt, 3 nuts, plate terminal and end cover.
(c) Remove the brush cover.
(d) Remove the 2 screws and brush holder.

3. REMOVE GENERATOR REGULATOR ASSY

(a) Remove the 3 screws and voltage regulator.

4. REMOVE GENERATOR HOLDER W/RECTIFIER

(a) Remove the 4 screws and rectifier holder.

5. REMOVE ALTERNATOR RECTIFIRE END FRAME

(a) Remove the rubber insulator.
(b) Remove the seal plate.
(c) Remove the 4 nuts.

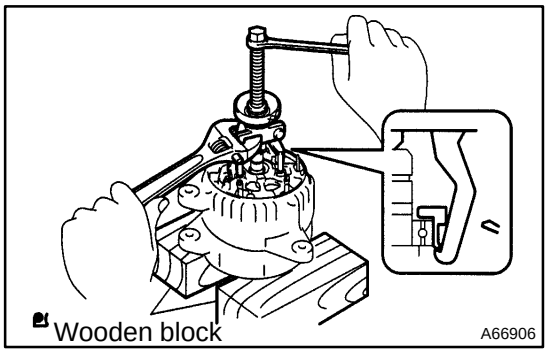

(d) Using bearing puller set, remove the rectifier end frame.

6. REMOVE GENERATOR ROTOR ASSY

(a) Remove the alternator washer from the rotor.
(b) Remove the rotor from drive end frame.

NOTICE:
Do not drop the rotor.

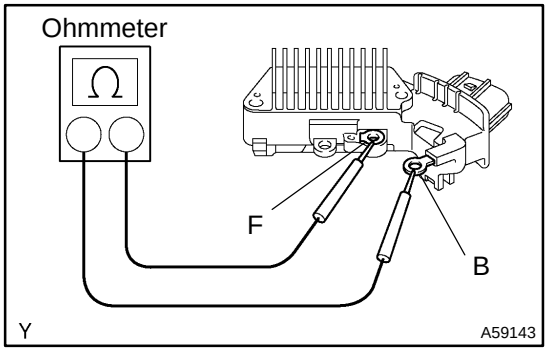

7. INSPECT GENERATOR REGULATOR ASSY

(a) Using an ohmmeter, check the continuity between terminals F and B.

Standard:
When the positive and negative poles between terminals F and B are exchanged, there is continuity in one way but no continuity in another way.

If the continuity is not as specified, replace the voltage regulator.

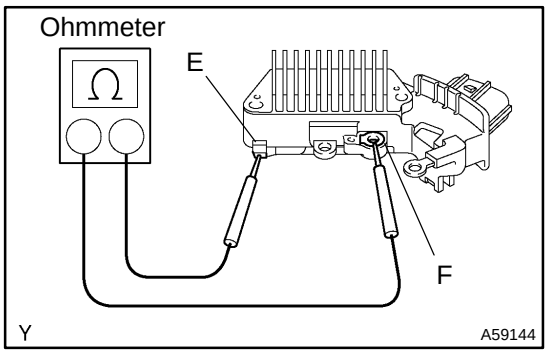

(b) Using an ohmmeter, check the continuity between terminals F and E.

Standard:

When the positive and negative poles between terminals F and E are exchanged, there is continuity in one way but no continuity in another way.

If the continuity is not as specified, replace the voltage regulator.

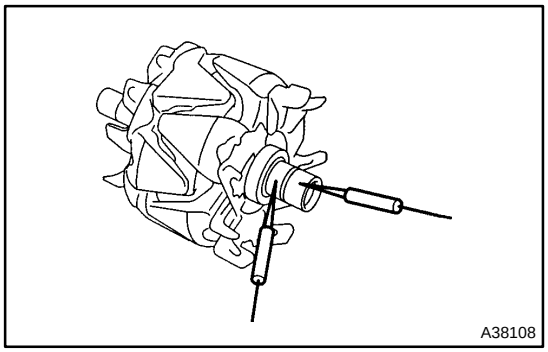

8. INSPECT GENERATOR ROTOR ASSY

(a) Inspect rotor for open circuit.

(1) Using an ohmmeter, check that there is continuity between the slip rings.

Standard resistance: 2.7 – 3.1 Ω at 20°C (68°F)

If there is no continuity, replace the rotor.

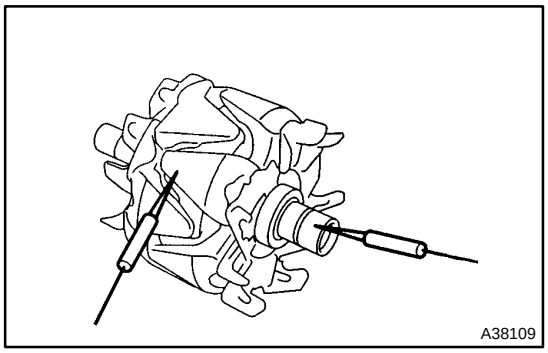

(b) Inspect rotor for ground.

(1) Using an ohmmeter, check that there is no continuity between the slip ring and rotor.

If there is continuity, replace the rotor.

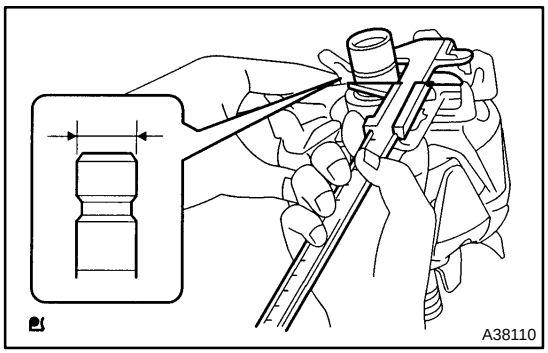

(c) Inspect slip rings.

(1) Using vernier calipers, measure the slip ring diameter.

Standard diameter: 14.2 – 14.4 mm (0.559 – 0.567 in.)

Minimum diameter: 12.8 mm (0.504 in.)

If the diameter is less than minimum, replace the rotor.

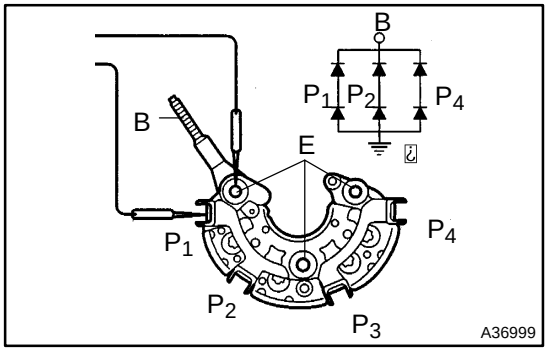

9. INSPECT GENERATOR HOLDER W/RECTIFIER

(a) Using an ohmmeter, connect one tester probe to the B or E terminal and the other to each rectifier terminal.

(b) Reverse the polarity of the tester probes and repeat step (a).

(c) Check that one shows continuity and the other shows no continuity.

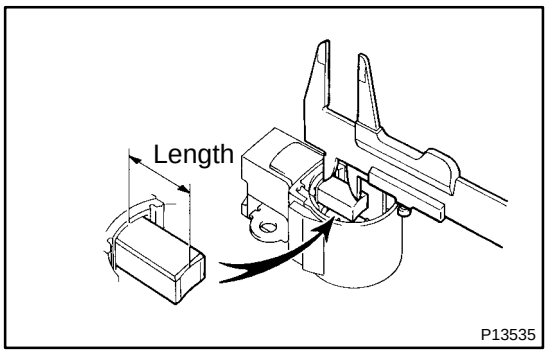

10. INSPECT BRUSH

(a) Using vernier calipers, measure the exposed brush length.

Standard exposed length:
9.5 – 11.5 mm (0.374 – 0.453 in.)
Minimum exposed length: 1.5 mm (0.059 in.)

If the exposed length is less than minimum, replace the brush holder assembly.

11. INSTALL GENERATOR ROTOR ASSY

(a) Install the generator rotor.
(b) Install the alternator washer to the rotor.

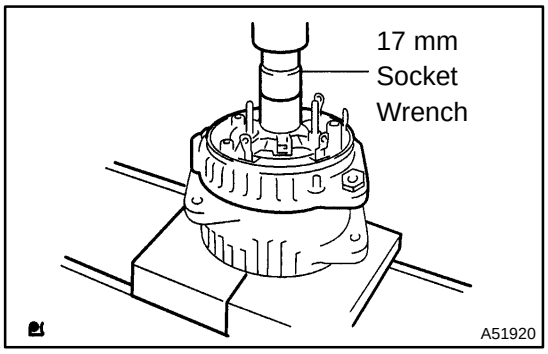

12. INSTALL ALTERNATOR RECTIFIRE END FRAME

(a) Using a 17 mm socket wrench and press, slowly press in the rectifier end frame.

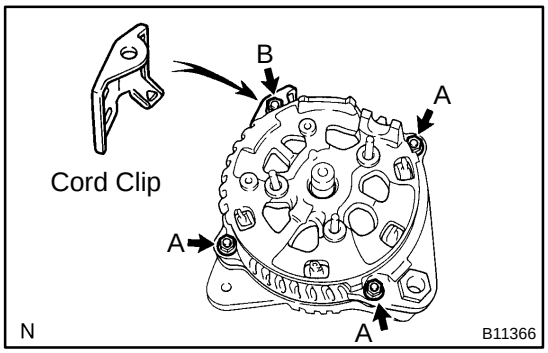

(b) Install the cord clip and 4 nuts.

Torque:
Nut A 4.5 N·m (46 kgf·cm, 39 in.·lbf)
Nut B 5.4 N·m (55 kgf·cm, 47 in.·lbf)

(c) Install the seal plate on the rectifier end frame.

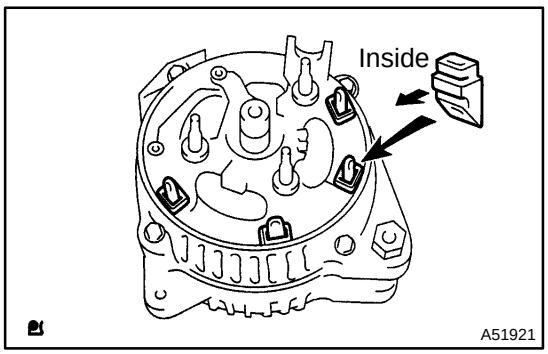

(d) Install the 4 rubber insulators on the lead wires.

NOTICE:
Be careful of the rubber insulators installation direction.

13. INSTALL GENERATOR HOLDER W/RECTIFIER

(a) Install the rectifier holder while pushing it with the 4 screws.
Torque: 2.9 N·m (30 kgf·cm, 26 in.·lbf)

14. INSTALL GENERATOR REGULATOR ASSY

(a) Install the 3 screws and voltage regulator.
Torque: 2.0 N·m (20 kgf·cm, 18 in.·lbf)

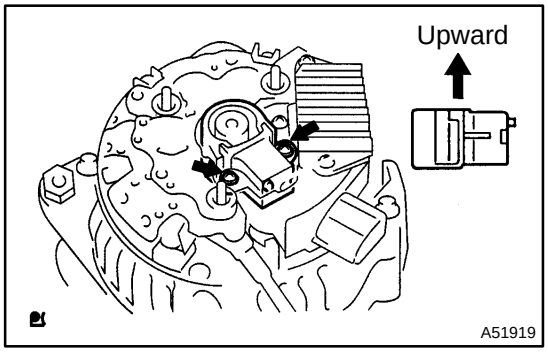

15. INSTALL GENERATOR BRUSH HOLDER ASSY

(a) Install the 2 screws and brush holder.
Torque: 2.0 N·m (20 kgf·cm, 18 in.·lbf)

NOTICE:
Be careful of the holder installation direction.

(b) Install the brush cover.
(c) Install the end cover and plate terminal with the bolt and 3 nuts.
Torque:
Nut 4.4 N·m (45 kgf·cm, 39 in.·lbf)
Bolt 3.9 N·m (39 kgf·cm, 35 in.·lbf)
(d) Install the terminal insulator with the nut.
Torque: 4.1 N·m (42 kgf·cm, 36 in.·lbf)

16. INSTALL GENERATOR PULLEY

SST 09820–63010 (09820–06010, 09820–06020)

HINT:

SST1 – A, B	09820–06010
SST2	09820–06020

(a) Install the pulley to the rotor shaft by tightening the pulley nut by hand.

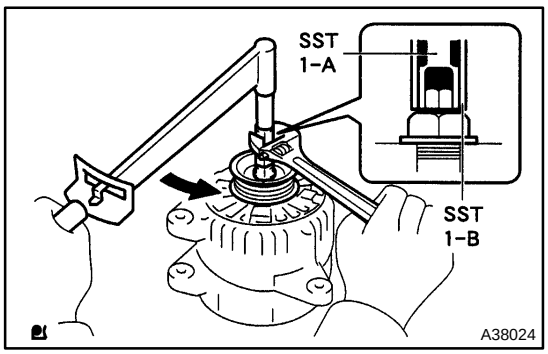

(b) Hold SST 1 – A with a torque wrench, and tighten SST 1 – B clockwise to the specified to torque.
Torque: 39 N·m (400 kgf·cm, 29 ft·lbf)

NOTICE:
Check that SST is secured to the pulley shaft.

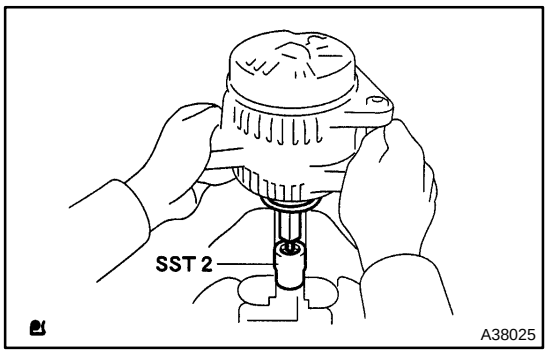

(c) Mount SST 2 in a vise.
(d) Insert SST 1 – A, B into SST 2, and attach the pulley nut to SST 2.

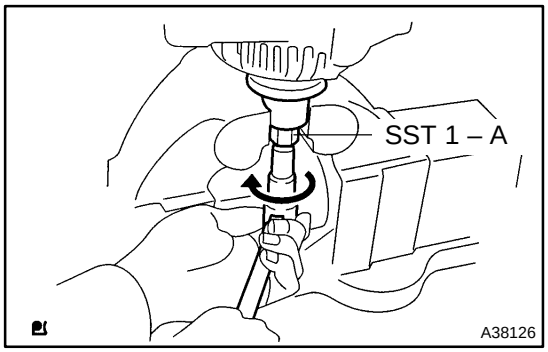

(e) Tighten the pulley nut, turn SST 1 – A in the direction shown in the illustration.
Torque: 111 N·m (1,125 kgf·cm, 81 ft·lbf)
(f) Remove the alternator form SST 2.

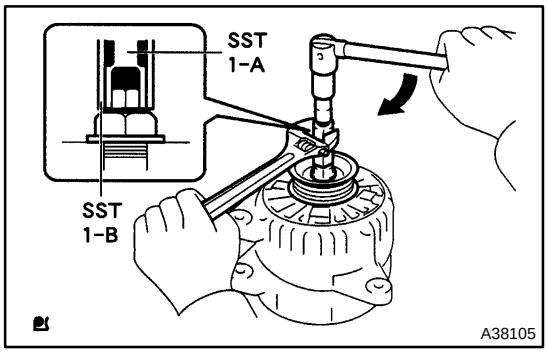

(g) Turn SST 1 – B, and remove SST 1 – A, B.
(h) Turn the pulley, and check that the pulley moves smoothly.

STARTING SYSTEM (1MZ–FE)

1902T–02

INSPECTION

1. STARTER ASSY

NOTICE:
These tests must be done within 3 to 5 seconds to avoid burning out the coil.

(a) Disconnect the field coil lead wire from terminal C.

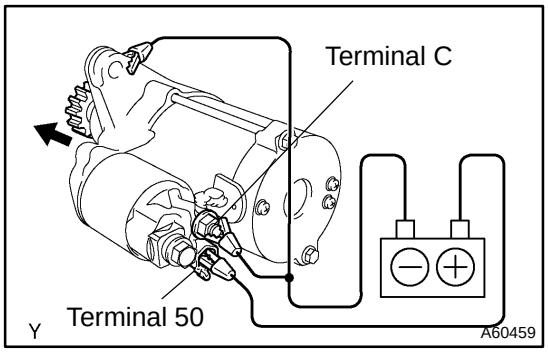

(b) Connect the battery to the magnetic switch as shown. Check that the clutch pinion gear moves outward.

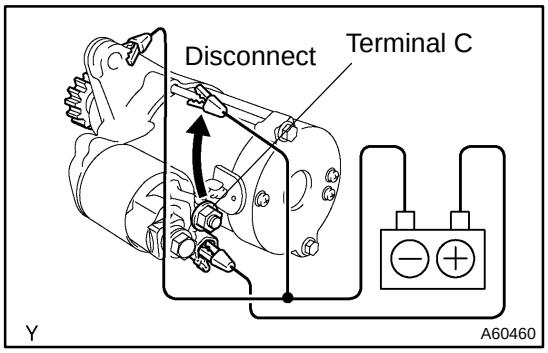

(c) With battery connected as above with the clutch pinion gear out, disconnect the negative (–) lead from terminal C. Check that the pinion gear remains out.

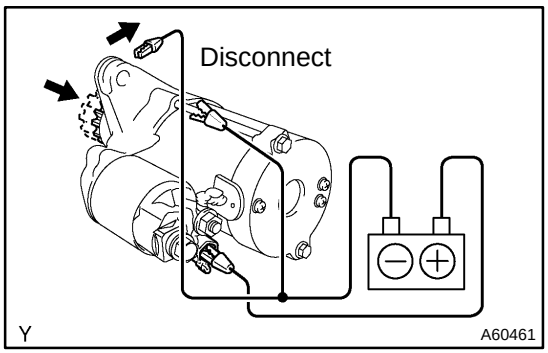

(d) Disconnect the negative (–) lead from the switch body. Check that the clutch pinion gear returns inward.

(e) Connect the lead wire to the terminal C with the nut.
Torque: 5.9 N·m (60 kgf·cm, 52 in.·lbf)

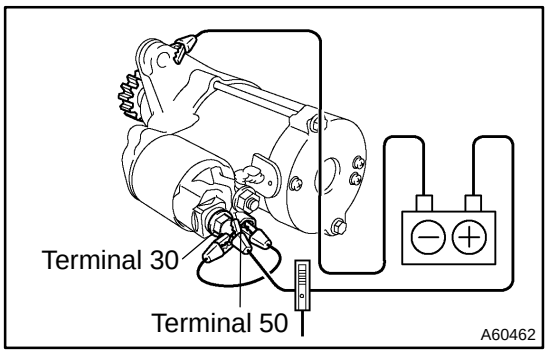

(f) Connect the battery and ammeter to the starter as shown.
(g) Check that the starter rotates smoothly and steadily with the pinion gear moving out. Check that the ammeter shows the specified current.
Specified current: 90 A or less at 11.5 V

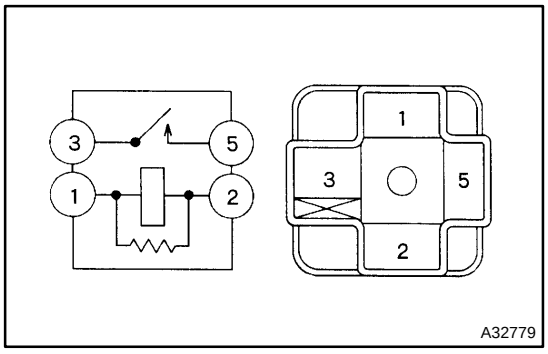

2. STARTER RELAY ASSY

(a) Inspect the relay continuity.
(1) Using an ohmmeter, check that there is continuity between terminals 1 and 2.

If there is no continuity, replace the relay.

(2) Check that there is no continuity between terminals 3 and 5.

If there is continuity, replace the relay.

(b) Inspect the relay operation.
(1) Apply battery positive voltage across terminals 1 and 2.
(2) Using an ohmmeter, check that there is continuity between terminals 3 and 5.

If there is no continuity, replace the relay.

STARTER ASSY (1MZ–FE)

1902U–02

REPLACEMENT

1. REMOVE BATTERY
2. REMOVE AIR CLEANER INLET ASSY
3. REMOVE AIR CLEANER ASSEMBLY WITH HOSE
4. REMOVE AIR CLEANER BRACKET
5. REMOVE AIR CLEANER INLET NO.1

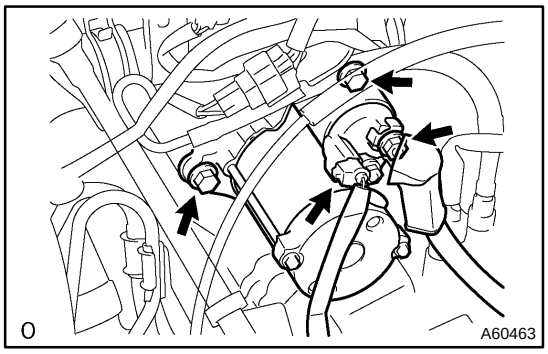

6. REMOVE STARTER ASSY

(a) Disconnect the starter connector.
(b) Remove the nut, and disconnect the lead wire from terminal 30.
(c) Remove the 2 bolts and starter.

7. INSTALL STARTER ASSY

Torque:
Bolt 42 N·m (429 kgf·cm, 31 ft·lbf)
Nut 9.8 N·m (100 kgf·cm, 7 ft·lbf)

8. INSTALL AIR CLEANER ASSEMBLY WITH HOSE

1908L–01

COMPONENTS

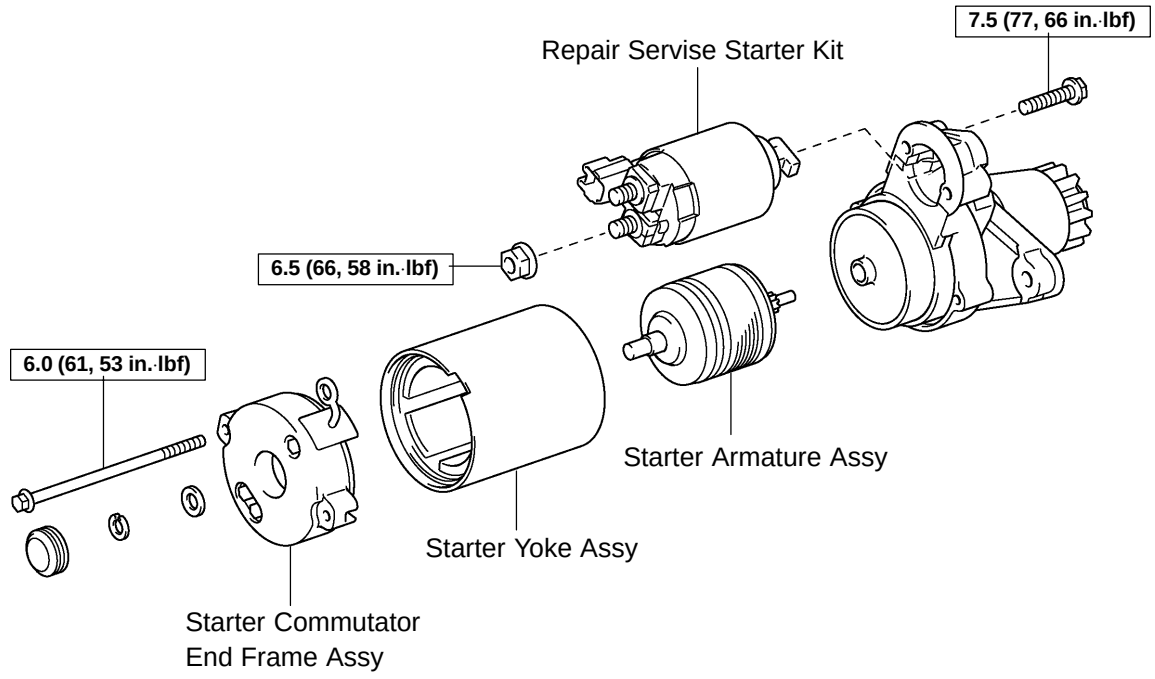

N·m (kgf·cm, ft·lbf): Specified torque

O

A59593

OVERHAUL

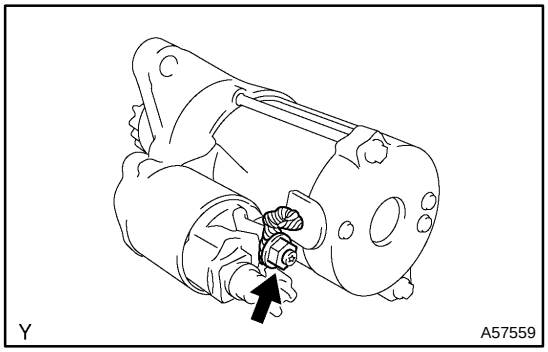

1. REMOVE REPAIR SERVICE STARTER KIT

(a) Remove the nut, and disconnect the lead wire from the repair service starter kit.

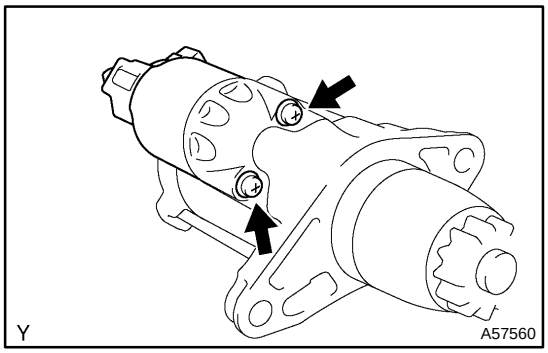

(b) Remove the 2 screws holding the repair service starter kit to the starter housing.
(c) Remove the repair service starter kit.
(d) Remove the return spring and plunger.

2. REMOVE STARTER COMMUTATOR END FRAME ASSY

(a) Using a screwdriver, remove the starter commutator end frame cover.

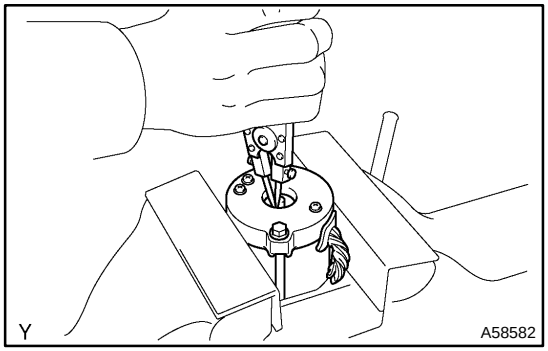

(b) Using snap ring pliers, remove the snap ring and plate washer.

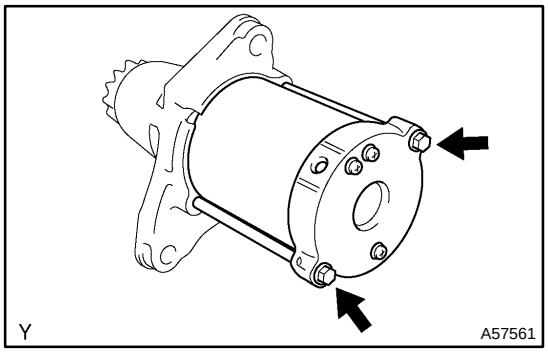

(c) Remove the 2 through bolts, and pull out the starter yoke assy together with the commutator end frame assy.

3. REMOVE STARTER ARMATURE ASSY

(a) Remove the starter armature assy from starter yoke assy.

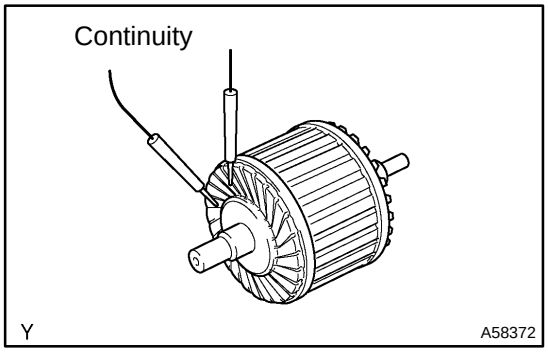

4. INSPECT STARTER ARMATURE ASSY

(a) Check the commutator for open circuit.
  (1) Using an ohmmeter, check that there is continuity between the segments of the commutator.

If there is no continuity between any segments, replace the armature.

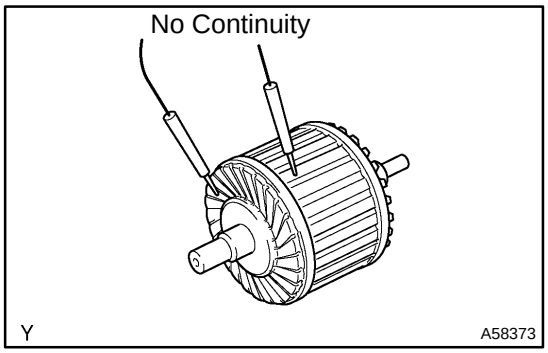

(b) Check the commutator for ground.
  (1) Using an ohmmeter, check that there is no continuity between the commutator and armature coil core.

If there is continuity, replace the armature.

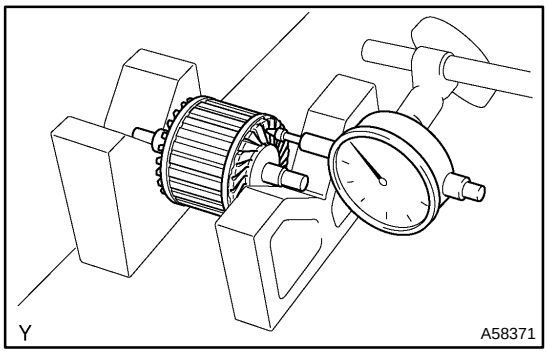

(c) Check the commutator for dirty and burn on surface.

If the surface is dirty or burnt, correct it with sandpaper (No.400) or a lathe.

(d) Check for the commutator circuit runout.
  (1) Place the commutator on V–blocks.
  (2) Using a dial indicator, measure the circle runout.
  Standard circle runout: 0.02 mm (0.0008 in.)
  Maximum circle runout: 0.05 mm (0.0020 in.)

If the circle runout is greater than maximum, replace the armature.

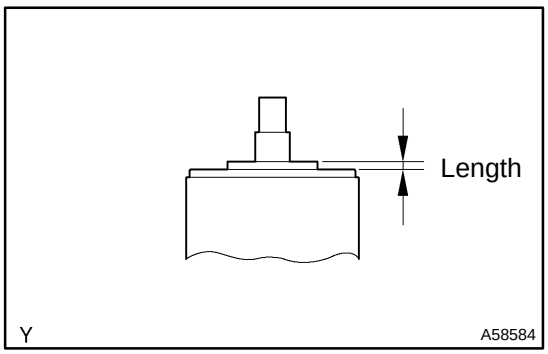

(e) Using vernier calipers, measure the commutator length.
  Standard length: 3.3 mm (0.130 in.)
  Maximum length: 4.0 mm (0.158 in.)

If the length is greater than maximum, replace the armature.

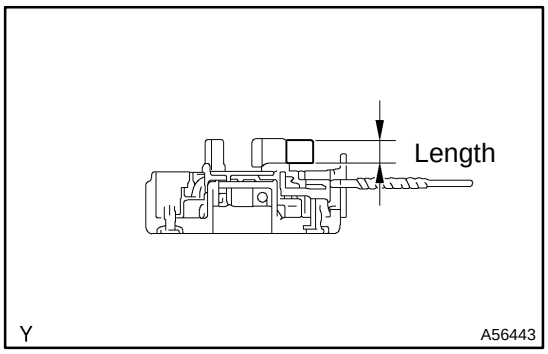

5. INSPECT STARTER COMMUTATOR END FRAME ASSY

(a) Using vernier calipers, measure the brush holder length.
Standard length: 9.0 mm (0.354 in.)
Maximum length: 4.0 mm (0.158 in.)

If the length is less than minimum, replace the starter commutator end frame assy.

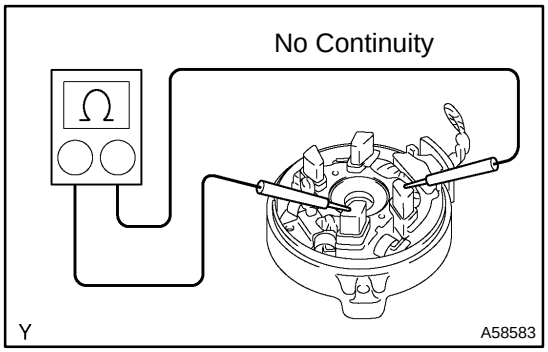

(b) Check the brush holder.
(1) Using an ohmmeter, check that there is no continuity between the positive (+) and negative (–) brush holders.

If the there is continuity repair or replace the starter commutator end frame assy.

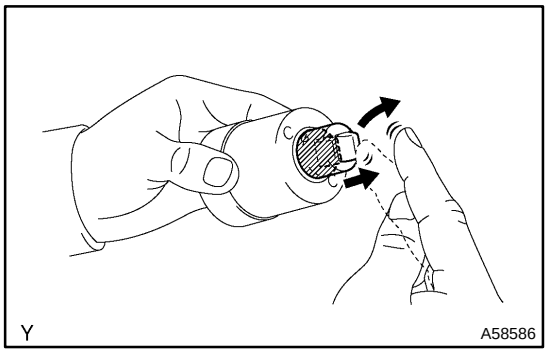

6. INSPECT REPAIR SERVICE STARTER KIT

(a) Check the plunger.
(1) Push in the plunger and check that it returns quickly to its original position.

If necessary, replace the repair service starter kit.

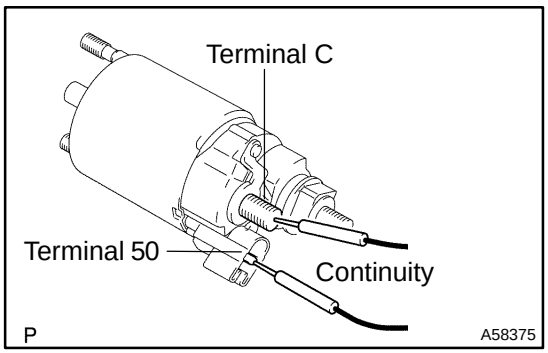

(b) Check the pull–in coil for open circuit.
(1) Using an ohmmeter, check that there is continuity between terminals 50 and C.

If there is no continuity, replace the repair service starter kit.

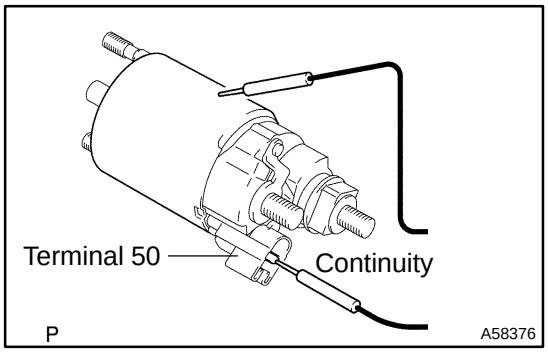

(c) Check whether the hold–in coil has an open circuit.
(1) Using an ohmmeter, check that there is continuity between terminal 50 and the switch body.

If there is no continuity, replace the repair service kit.

7. INSTALL STARTER ARMATURE ASSY

(a) Apply grease to the washer plate and armature shaft.
(b) Install the armature shaft to the starter commutator end frame assy.
(c) Using snap ring pliers, install the plate washer and new snap ring.

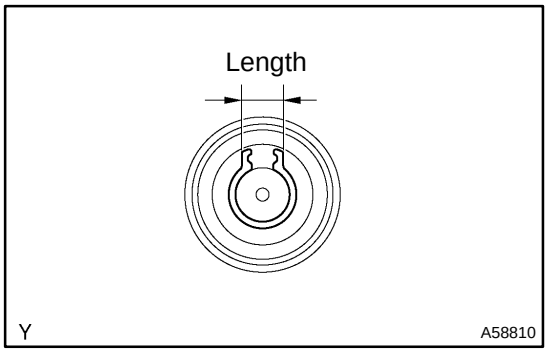

(d) Using vernier calipers, mesure the snap ring.
Maximum length: 5.0 mm (0.197 in.)

If the length is greater than maximum, replace the new snap ring.

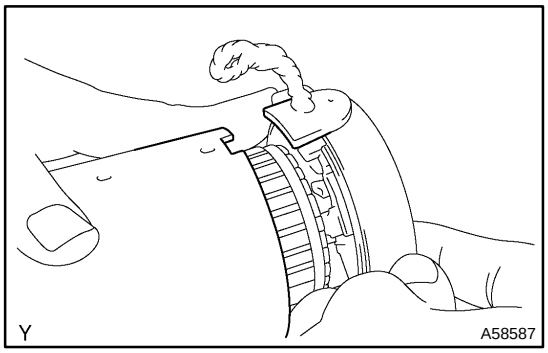

8. INSTALL STARTER COMMUTATOR END FRAME ASSY

(a) Align the starter commutator rubber end frame with the cutout of starter yoke.
(b) Install starter yoke assy to starter commutator end frame.

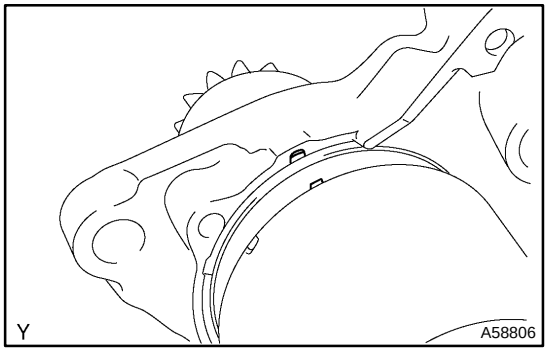

(c) Align the starer yoke assy with the cutout of motor terminal starter kit.

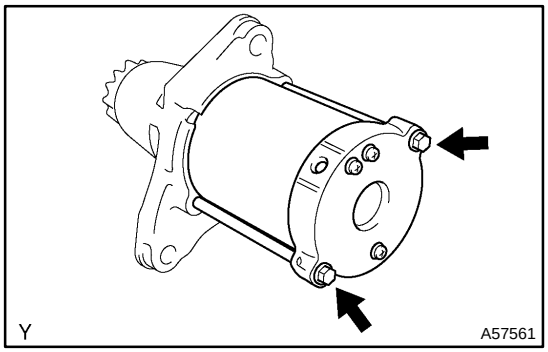

(d) Install the starter yoke assy with the 2 through bolts.
Torque: 6.0 N·m (61 kgf·cm, 53 in.·lbf)
(e) Install the starter commutator end frame cover.

9. INSTALL REPAIR SERVICE STARTER KIT

(a) Apply grease to the plunger and hook.
(b) Hang the plunger hook of the repair service starter kit to the drive lever.
(c) Install the plunger and return spring.

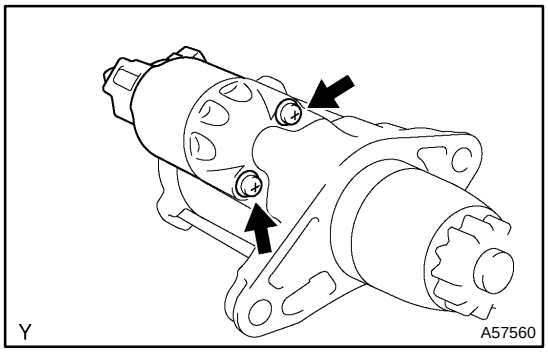

(d) Install the repair service starter kit with the 2 screws.
Torque: 7.5 N·m (77 kgf·cm, 66 in.·lbf)

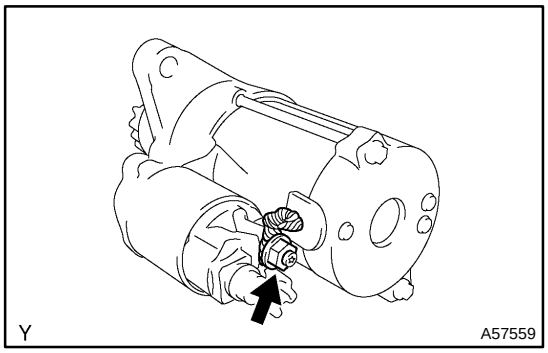

(e) Apply grease to the nut of the lead wire.
(f) Connect the lead wire to the terminal with the nut.
Torque: 6.5 N·m (66 kgf·cm, 58 in.·lbf)

CHARGING SYSTEM (1MZ–FE)

1902W–02

PRECAUTION

1. PRECAUTION

(a) Check that the battery cables are connected to the correct terminals.
(b) Disconnect the battery cables when the battery is given a quick charge.
(c) Do not perform tests with a high voltage insulation resistance tester.
(d) Never disconnect the battery while the engine is running.
(e) Check that the charging cable is tightened on terminal B of the alternator and the fuse box.
(f) Do not check whether the alternator generates or not with conncting terminal F to the other terminal.

ON–VEHICLE INSPECTION

1. CHECK BATTERY ELECTROLYTE LEVEL

(a) Check the electrolyte quantity of each cell

(1) If under the lower level, replace the battery (or add distilled water if possible) and check the charging system.

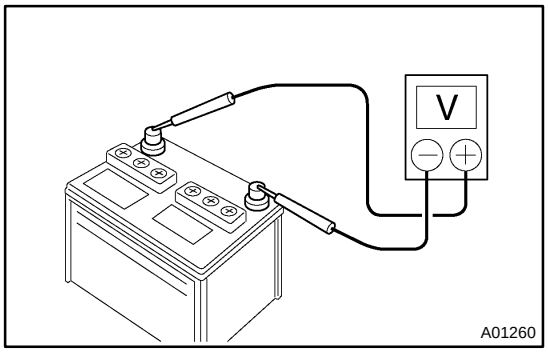

2. CHECK BATTERY VOLTAGE

(a) After having driven the vehicle and in the case that 20 minutes have not passed after having stopped the engine, turn the ignition switch ON and turn on the electrical system (headlight, blower motor, rear defogger etc.) for 60 seconds to remove the surface charge.

(b) Turn the ignition switch OFF and turn off the electrical systems.

(c) Measure the battery voltage between the negative (–) and positive (+) terminals of the battery.

Standard voltage: 12.5 – 12.9 V at 20°C (68°F)

If the voltage is less than specification, charge the battery.

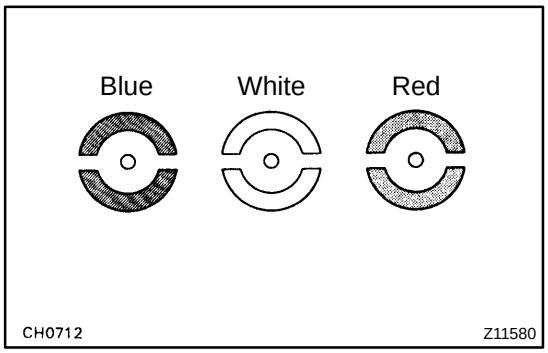

(d) Check the indicator as shown in the illustration.

HINT:

- Blue: OK
- White: Charging Necessary
- Red: Insufficient Water

3. CHECK BATTERY TERMINALS, FUSIBLE LINK AND FUSES

(a) Check that the battery terminals are not loose or corroded.

If the terminals are corroded, clean the terminals.

(b) Check the fusible link, H–fuses and fuses for continuity.

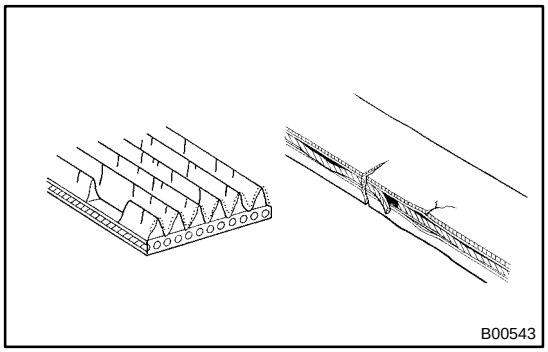

4. INSPECT DRIVE BELT

(a) Visually check the belt for excessive wear, frayed cords etc.

If any defect has been found, replace the drive belt.

HINT:

Cracks on the rib side of a belt are considered acceptable.

If the belt has chunks missing from the ribs, it should be replaced.

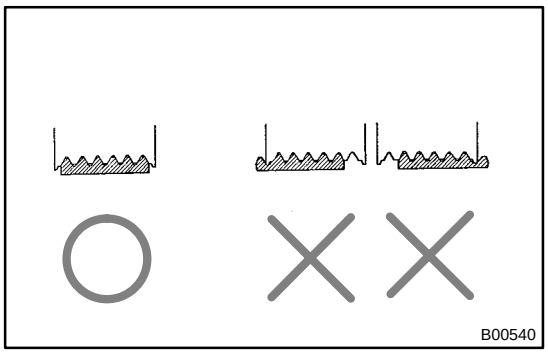

(b) Check that it fits properly in the ribbed grooves.

HINT:

Check with your hand to confirm that the belt has not slipped out of the groove on the bottom of the pulley.

5. VISUALLY CHECK ALTERNATOR WIRING

(a) Check that the wiring is in good condition.

6. LISTEN FOR ABNORMAL NOISES FROM ALTERNATOR

(a) Check that there is no abnormal noise from the alternator while the engine is running.

7. CHECK DISCHARGE WARNING LIGHT CIRCUIT

(a) Warm up engine and then turn it off.

(b) Switch off all accessories.

(c) Turn the ignition switch ON. Check that the discharge warning light is lit.

(d) Start the engine. Check that the light goes off.

If the light does not go off as specified, troubleshoot the charge warning light circuit.

8. INSPECT CHARGING CIRCUIT WITHOUT LOAD

HINT:

If a battery/alternator tester is available, connect the tester to the charging circuit as per manufacturer's instructions.

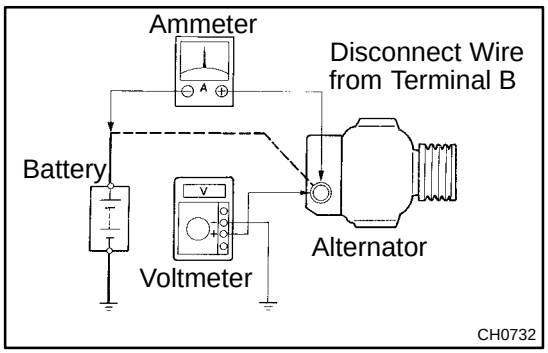

(a) If a tester is not available, connect a voltmeter to the charging circuit as follows.

(1) Disconnect the wire from terminal B of the alternator, and connect it to the negative (–) tester probe of the ammeter.

(2) Connect the positive (+) tester probe of the ammeter to terminal B of the alternator.

(3) Connect the positive (+) tester probe of the voltmeter to terminal B of the alternator.

(4) Ground the negative (–) tester probe of the voltmeter.

(b) Check the charging circuit as follows.

(1) With the engine running from idling to 2,000 rpm, check the reading on the ammeter and voltmeter.

Standard amperage: 10 A or less

Standard voltage: 13.2 – 14.8 V

9. INSPECT CHARGING CIRCUIT WITH LOAD

(a) With the engine running at 2,000 rpm, turn on the high beam headlights and place the heater blower switch at "HI".

(b) Check the reading on the ammeter.

Standard amperage: 30 A or more

If the ammeter reading is less than standard amperage, repair the alternator.

HINT:

If the battery is fully charged, the indication will sometimes be less than standard amperage.

GENERATOR ASSY (1MZ–FE)

1902Y–02

REPLACEMENT

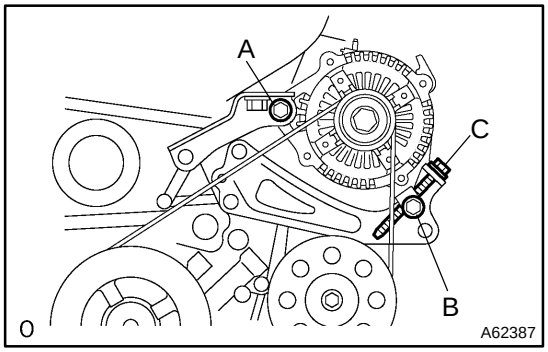

1. REMOVE GENERATOR ASSY

(a) Disconnect the generator connector.
(b) Remove the nut, and disconnect the lead wire from terminal B.
(c) Loosen the bolt A and B.
(d) Loosen the bolt C to lessen the tension of the drive belt.
(e) Remove the bolt A, B and the generator.

2. INSTALL GENERATOR ASSY

(a) Temporarily install the bolt A and B.
(b) Adjust the V–ribbed belt tension by tightening the adjusting bolt C. (See page 14–136)
(c) Tighten the bolt A and B.
Torque:
Bolt A 58 N·m (592 kgf·cm, 43 ft·lbf)
Bolt B 18 N·m (184 kgf·cm, 13 ft·lbf)
(d) Install the lead wire from terminal B.
Torque: 9.8 N·m (100 kgf·cm, 7 ft·lbf)

3. INSPECT DRIVE BELT DEFLECTION AND TENSION(REFERENCE) (Seee page 14–136)

1908N–01

COMPONENTS

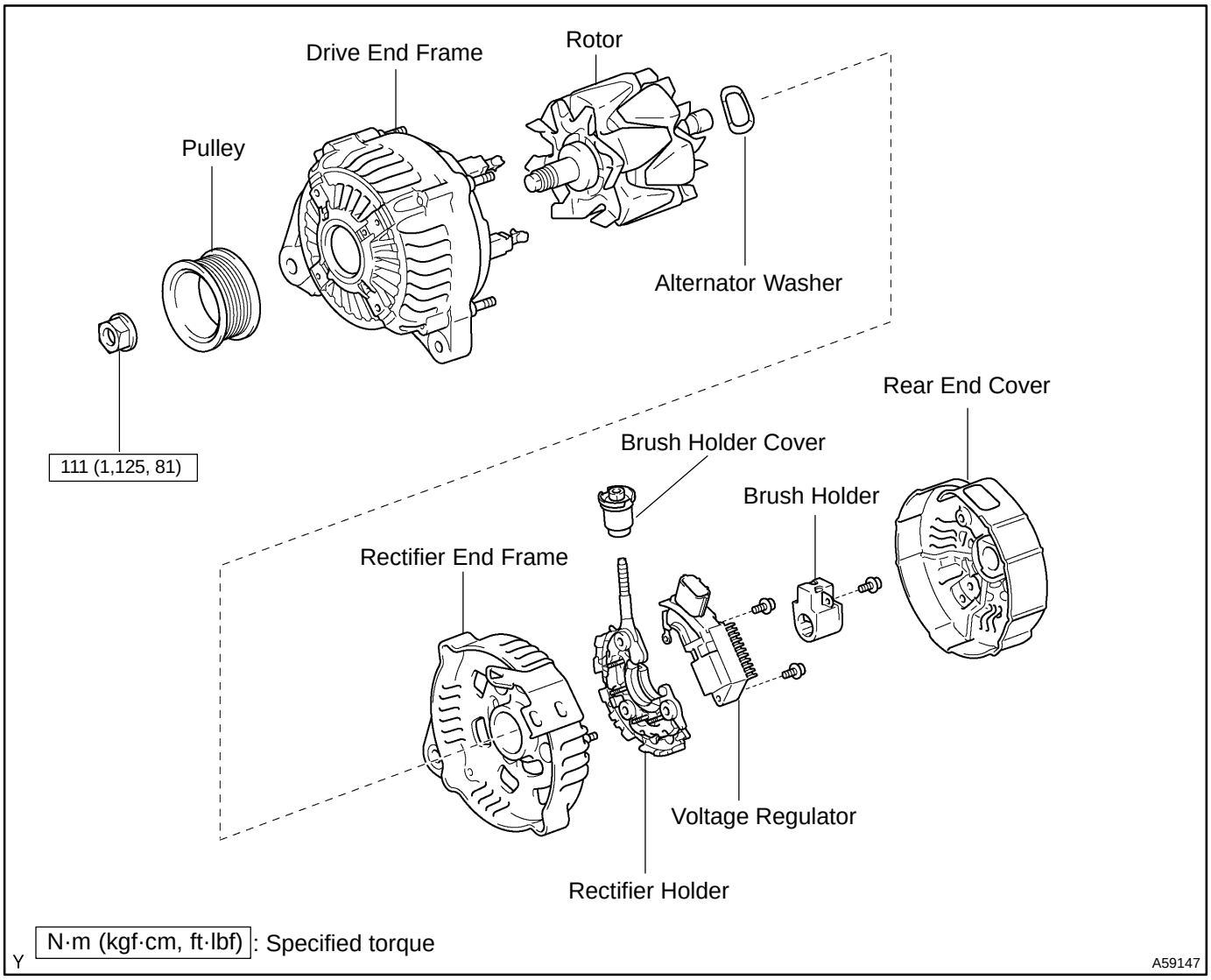

OVERHAUL

1. REMOVE GENERATOR PULLEY

SST 09820–63010 (09820–06010, 09820–06020)

HINT:

SST1 – A, B	09820–06010
SST2	09820–06020

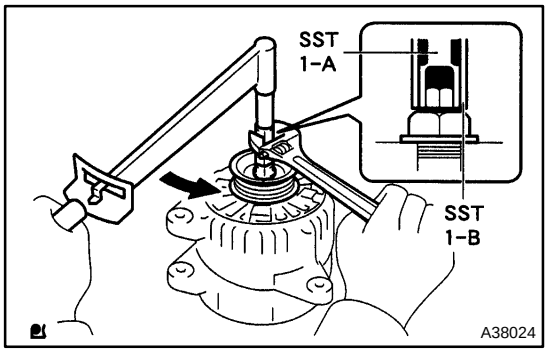

(a) Hold SST 1 – A with a torque wrench, and tighten SST 1 – B clockwise to the specified torque.
Torque: 39 N·m (400 kgf·cm, 29 ft·lbf)

NOTICE:
Check that SST is secured to the rotor shaft.

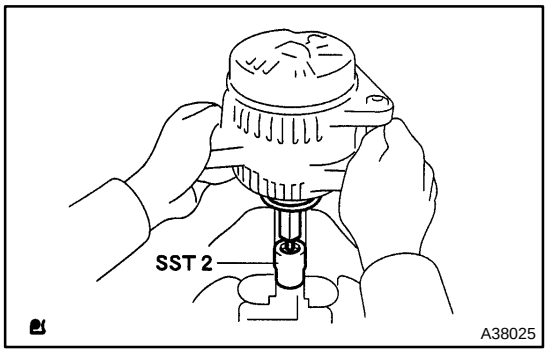

(b) Mount SST 2 in a vise.
(c) Insert SST 1 – A, B into SST 2, and attach the pulley nut to SST 2.

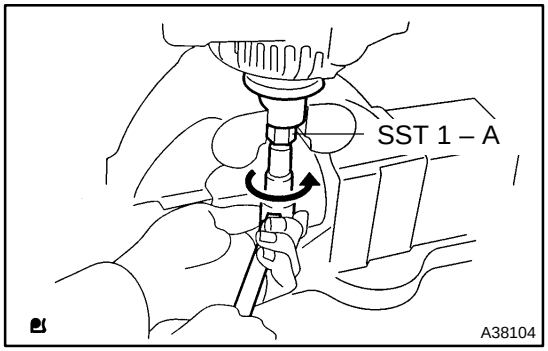

(d) To loosen the pulley nut, turn SST 1 – A in the direction shown in the illustration.

NOTICE:
To prevent damage to the rotor shaft, do not loosen the pulley nut more than one–half of a turn.

(e) Remove the alternator form SST 2.

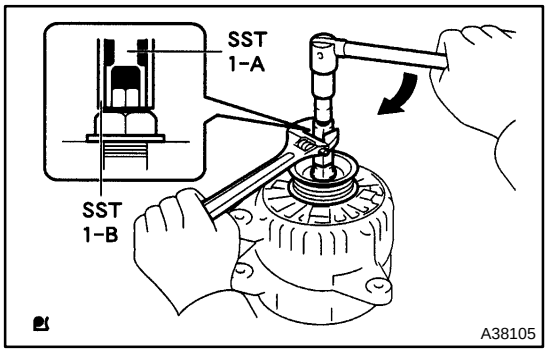

(f) Turn SST 1 – B, and remove SST 1 – A, B.
(g) Remove the pulley nut and pulley.

2. REMOVE GENERATOR BRUSH HOLDER ASSY

(a) Remove the nut and terminal insulator.
(b) Remove the bolt, 3 nuts, plate terminal and end cover.
(c) Remove the brush cover.
(d) Remove the 2 screws and brush holder.

3. REMOVE GENERATOR REGULATOR ASSY

(a) Remove the 3 screws and voltage regulator.

4. REMOVE GENERATOR HOLDER W/RECTIFIER

(a) Remove the 4 screws and rectifier holder.

5. REMOVE ALTERNATOR RECTIFIRE END FRAME

(a) Remove the rubber insulator.
(b) Remove the seal plate.
(c) Remove the 4 nuts.

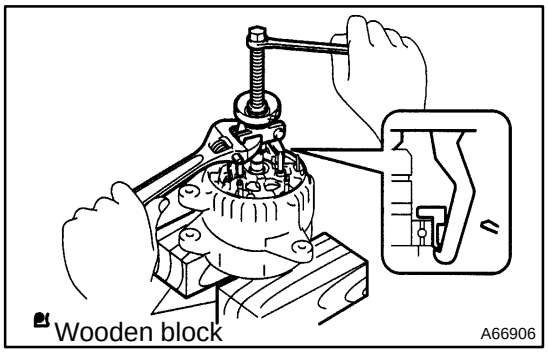

(d) Using bearing puller set, remove the rectifier end frame.

6. REMOVE GENERATOR ROTOR ASSY

(a) Remove the alternator washer from the rotor.
(b) Remove the rotor from drive end frame.

NOTICE:
Do not drop the rotor.

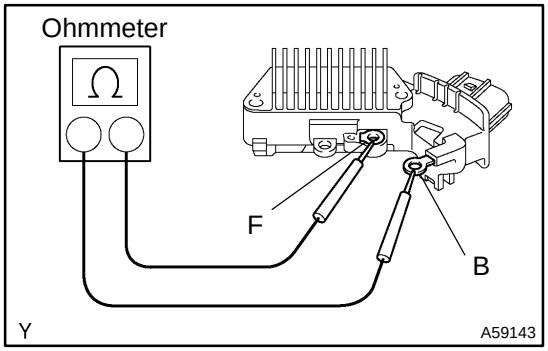

7. INSPECT GENERATOR REGULATOR ASSY

(a) Using an ohmmeter, check the continuity between terminals F and B.

Standard:
When the positive and negative poles between terminals F and B are exchanged, there is continuity in one way but no continuity in another way.

If the continuity is not as specified, replace the voltage regulator.

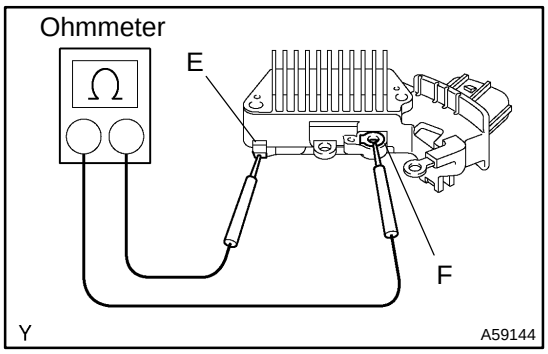

(b) Using an ohmmeter, check the continuity between terminals F and E.

Standard:

When the positive and negative poles between terminals F and E are exchanged, there is continuity in one way but no continuity in another way.

If the continuity is not as specified, replace the voltage regulator.

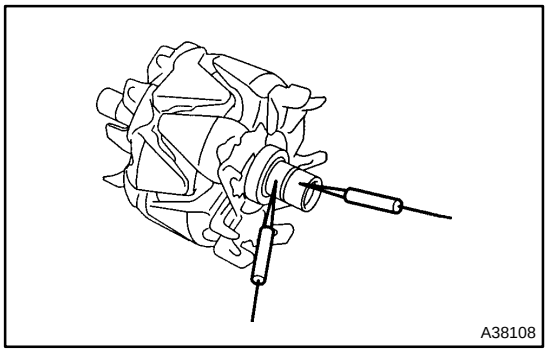

8. INSPECT GENERATOR ROTOR ASSY

(a) Inspect rotor for open circuit.

(1) Using an ohmmeter, check that there is continuity between the slip rings.

Standard resistance: 2.7 – 3.1 Ω at 20°C (68°F)

If there is no continuity, replace the rotor.

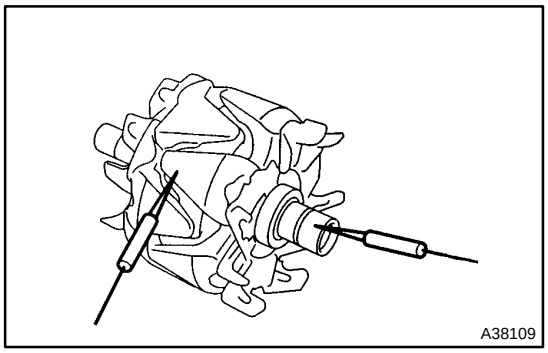

(b) Inspect rotor for ground.

(1) Using an ohmmeter, check that there is no continuity between the slip ring and rotor.

If there is continuity, replace the rotor.

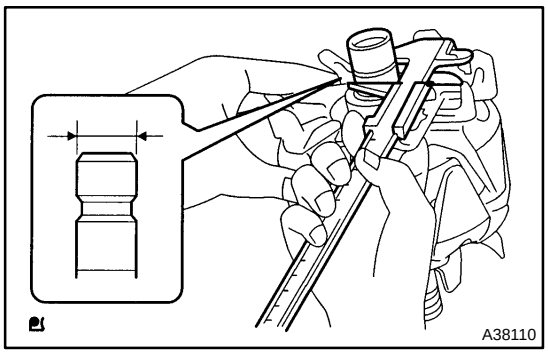

(c) Inspect slip rings.

(1) Using vernier calipers, measure the slip ring diameter.

Standard diameter: 14.2 – 14.4 mm (0.559 – 0.567 in.)

Minimum diameter: 12.8 mm (0.504 in.)

If the diameter is less than minimum, replace the rotor.

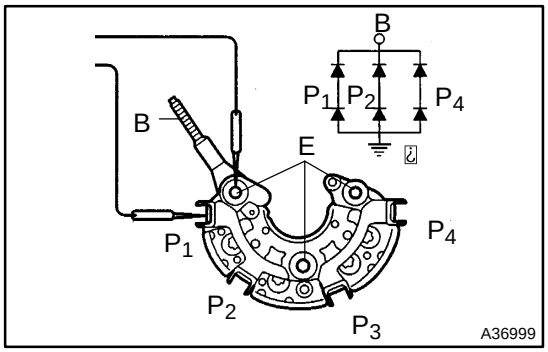

9. INSPECT GENERATOR HOLDER W/RECTIFIER

(a) Using an ohmmeter, connect one tester probe to the B or E terminal and the other to each rectifier terminal.

(b) Reverse the polarity of the tester probes and repeat step (a).

(c) Check that one shows continuity and the other shows no continuity.

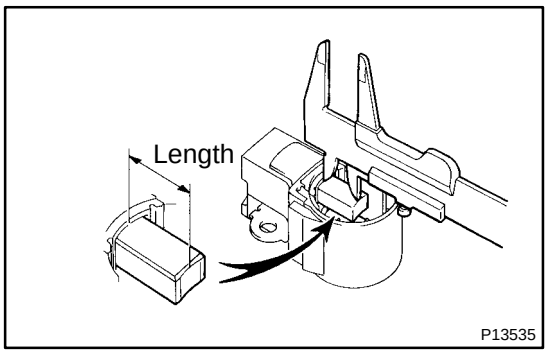

10. INSPECT BRUSH

(a) Using vernier calipers, measure the exposed brush length.

Standard exposed length:
9.5 – 11.5 mm (0.374 – 0.453 in.)
Minimum exposed length: 1.5 mm (0.059 in.)

If the exposed length is less than minimum, replace the brush holder assembly.

11. INSTALL GENERATOR ROTOR ASSY

(a) Install the generator rotor.
(b) Install the alternator washer to the rotor.

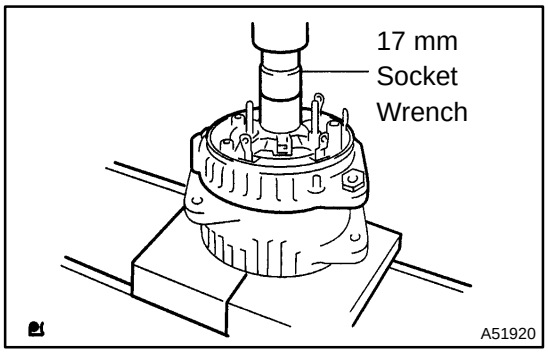

12. INSTALL ALTERNATOR RECTIFIRE END FRAME

(a) Using a 17 mm socket wrench and press, slowly press in the rectifier end frame.

(b) Install the cord clip and the 4 nuts.
Torque: 4.5 N·m (46 kgf·cm, 39 in.·lbf) for without cord clip
Torque: 5.4 N·m (55 kgf·cm, 47 in.·lbf) for with cord clip

(c) Install the seal plate on the rectifier end frame.

(d) Install the 4 rubber insulators on the lead wires.

NOTICE:
Be careful of the rubber insulators installation direction.

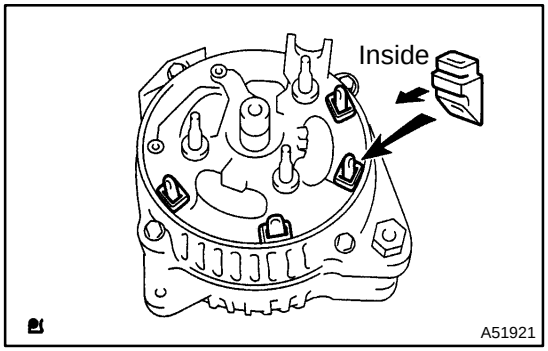

13. INSTALL GENERATOR HOLDER W/RECTIFIER

(a) Install the rectifier holder while pushing it with the 4 screws.
Torque: 2.9 N·m (30 kgf·cm, 26 in.·lbf)

14. INSTALL GENERATOR REGULATOR ASSY

(a) Install the 3 screws and voltage regulator.
Torque: 2.0 N·m (20 kgf·cm, 18 in.·lbf)

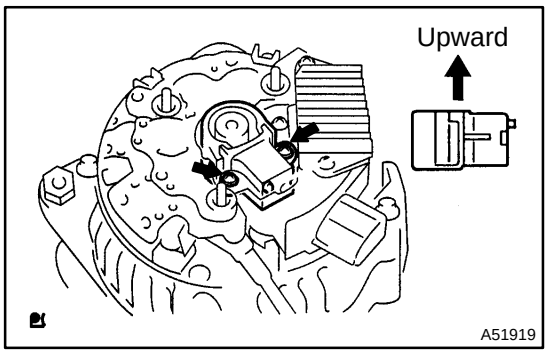

15. INSTALL GENERATOR BRUSH HOLDER ASSY

(a) Install the 2 screws and brush holder.
Torque: 2.0 N·m (20 kgf·cm, 18 in.·lbf)

NOTICE:
Be careful of the holder installation direction.

(b) Install the brush cover.
(c) Install the end cover and plate terminal with the bolt and 3 nuts.
Torque:
Nut 4.4 N·m (45 kgf·cm, 39 in.·lbf)
Bolt 3.9 N·m (39 kgf·cm, 35 in.·lbf)
(d) Install the terminal insulator with the nut.
Torque: 4.1 N·m (42 kgf·cm, 36 in.·lbf)

16. INSTALL GENERATOR PULLEY

SST 09820–63010 (09820–06010, 09820–06020)

HINT:

SST1 – A, B	09820–06010
SST2	09820–06020

(a) Install the pulley to the rotor shaft by tightening the pulley nut by hand.

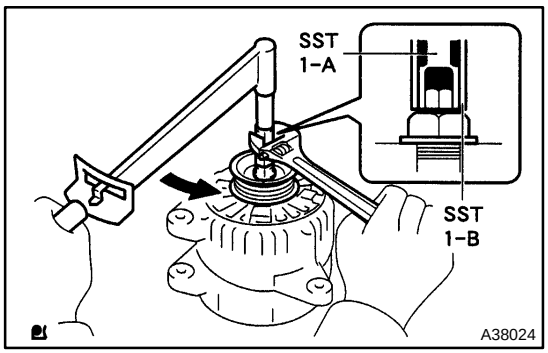

(b) Hold SST 1 – A with a torque wrench, and tighten SST 1 – B clockwise to the specified to torque.
Torque: 39 N·m (400 kgf·cm, 29 ft·lbf)

NOTICE:
Check that SST is secured to the pulley shaft.

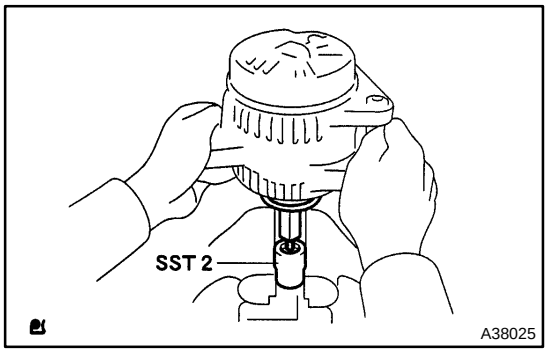

(c) Mount SST 2 in a vise.
(d) Insert SST 1 – A, B into SST 2, and attach the pulley nut to SST 2.

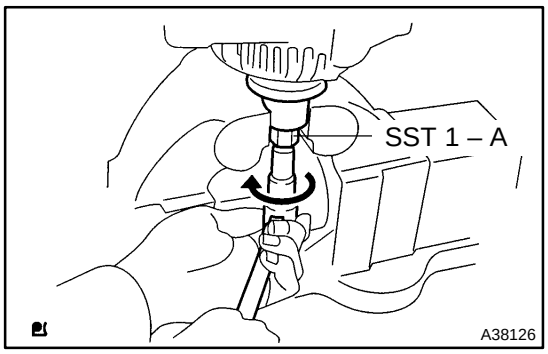

(e) Tighten the pulley nut, turn SST 1 – A in the direction shown in the illustration.
Torque: 111 N·m (1,125 kgf·cm, 81 ft·lbf)

(f) Remove the alternator form SST 2.

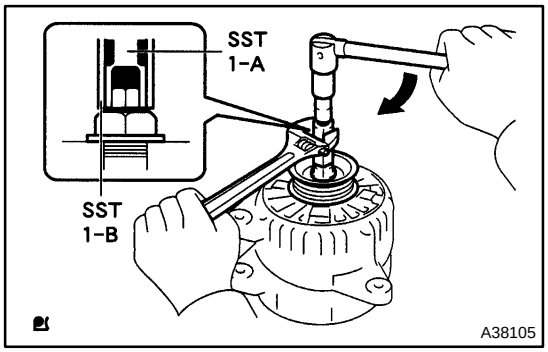

(g) Turn SST 1 – B, and remove SST 1 – A, B.

(h) Turn the pulley, and check that the pulley moves smoothly.

FRONT SUSPENSION SYSTEM

2601D–02

PROBLEM SYMPTOMS TABLE

Use the table below to help you find the cause of the problem. The numbers indicate the priority of the likely cause of the problem. Check each part in order. If necessary, replace these parts.

Symptom	Suspect Area	See page
Bottoming	1. Vehicle (Overloaded)	–
	2. Spring (Weak)	26–9
	3. Shock absorber (Worn)	26–9
Sways/pitches	1. Tire (Worn or improperly inflated)	28–1
	2. Stabilizer bar (Bent or broken)	26–9
	3. Shock absorber (Worn)	26–9
Front wheel shimmy	1. Tire (Worn or improperly inflated)	28–1
	2. Wheel (Out of balance)	28–1
	3. Shock absorber (Worn)	26–9
	4. Wheel alignment (Incorrect)	26–5 27–3
	5. Ball joint (Worn)	26–17
	6. Hub bearing (Worn)	30–2
	7. Steering linkage (Loose or worn)	–
Abnormal tire wear	1. Tire (Worn or improperly inflated)	28–1
	2. Wheel alignment (Incorrect)	26–5 27–3
	3. Shock absorber (Worn)	26–9
	4. Suspension parts (Worn)	–

2606O–01

REPAIR

HINT:

This is the repair procedure for vehicle pull.

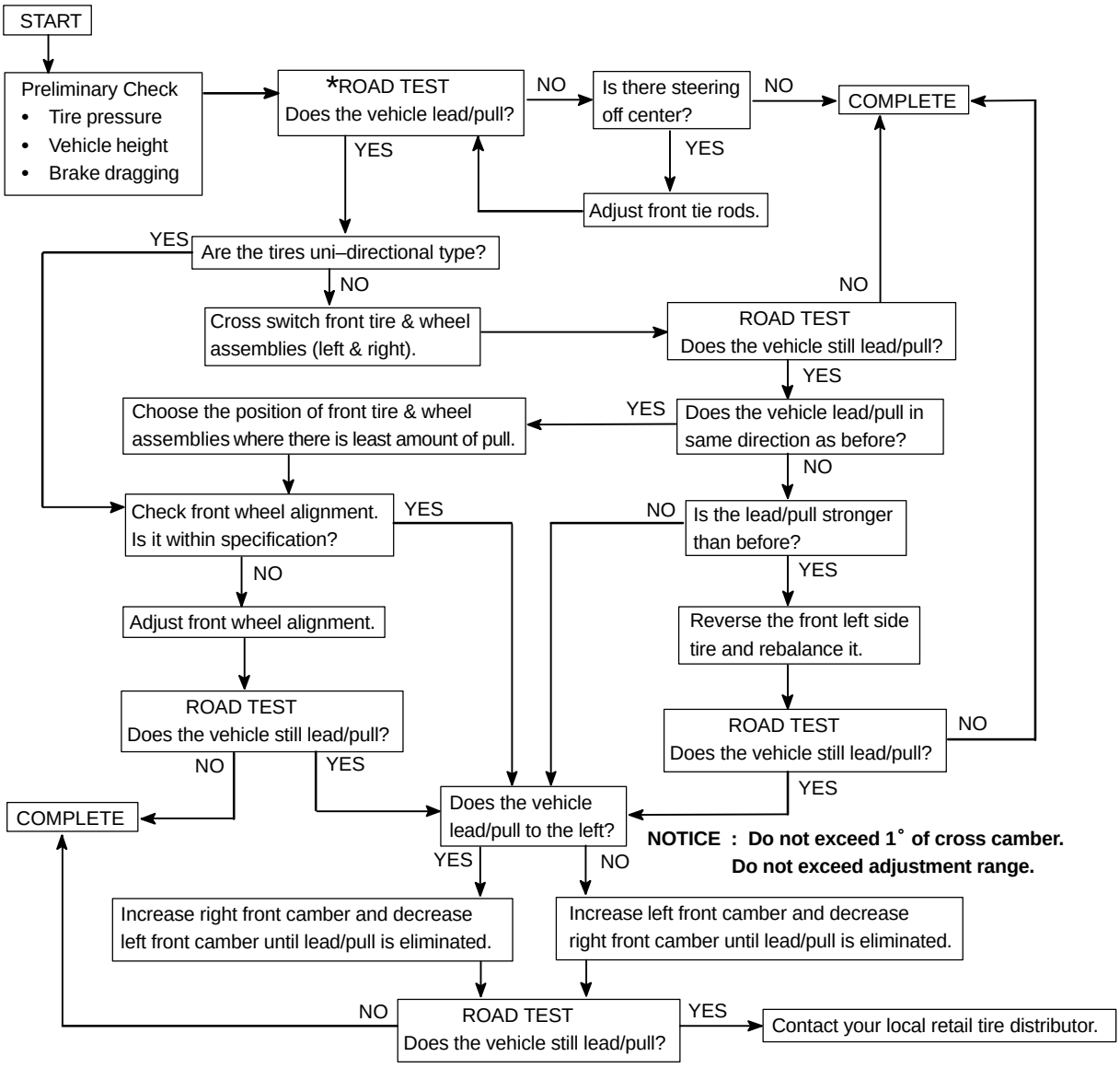

*Select a flat road where the vehicle can be driven in a straight line for 100 meters at a constant speed of 35mph. Please confirm safety and set the steering wheel to its straight position. Drive the vehicle in a straight line for 100 meters at a constant speed of 35mph without holding the steering wheel.

(1) The vehicle can keep straight but the steering wheel has some angle.

→STEERING OFF CENTER (See page 50–4)

(2) The vehicle cannot keep straight.

→STEERING PULL

FRONT SUSPENSION

2601C–03

COMPONENTS

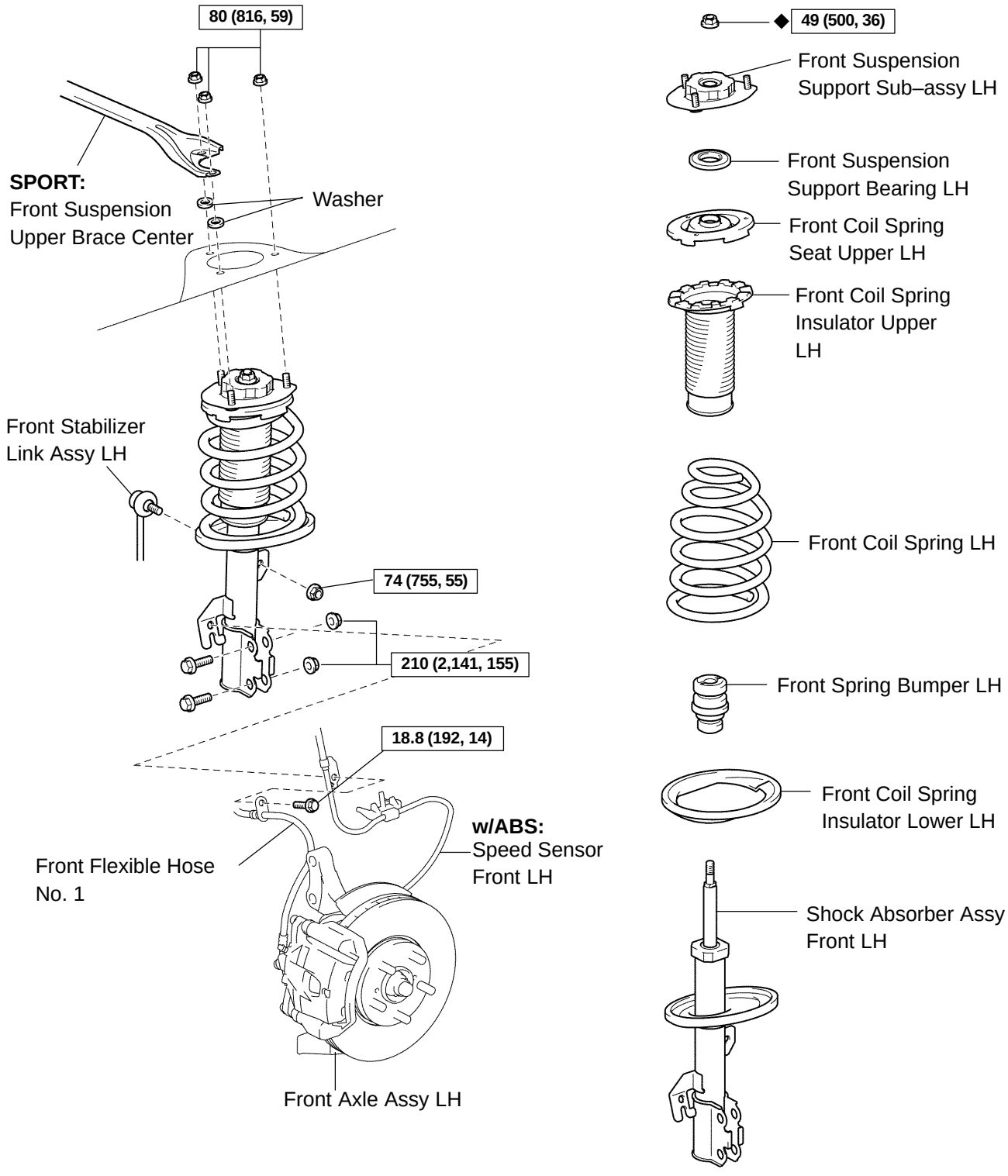

N·m (kgf·cm, ft·lbf) : Specified torque

◆ Non–reusable part

P

C90258

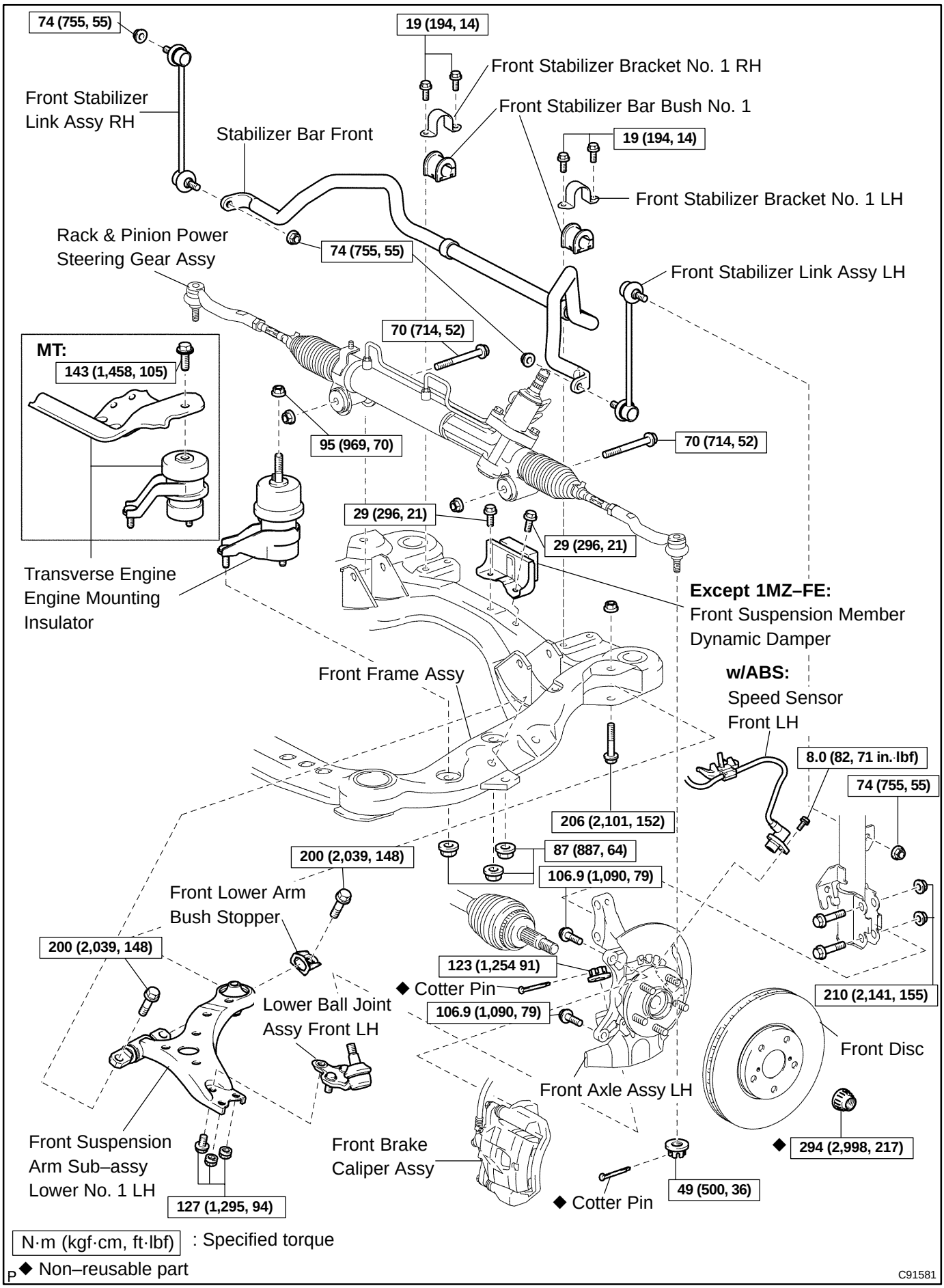
74 (755, 55)
19 (194, 14)
Front Stabilizer Bracket No. 1 RH
Front Stabilizer Link Assy RH
Front Stabilizer Bar Bush No. 1
Stabilizer Bar Front
19 (194, 14)
Front Stabilizer Bracket No. 1 LH
Rack & Pinion Power Steering Gear Assy
74 (755, 55)
Front Stabilizer Link Assy LH
70 (714, 52)
MT:
143 (1,458, 105)
95 (969, 70)
70 (714, 52)
29 (296, 21)
29 (296, 21)
Transverse Engine Engine Mounting Insulator
Except 1MZ–FE:
Front Suspension Member Dynamic Damper
Front Frame Assy
w/ABS:
Speed Sensor Front LH
8.0 (82, 71 in.·lbf)
74 (755, 55)
206 (2,101, 152)
200 (2,039, 148)
87 (887, 64)
106.9 (1,090, 79)
Front Lower Arm Bush Stopper
200 (2,039, 148)
123 (1,254 91)
◆ Cotter Pin
210 (2,141, 155)
Lower Ball Joint Assy Front LH
106.9 (1,090, 79)
Front Disc
Front Axle Assy LH
Front Suspension Arm Sub–assy Lower No. 1 LH
Front Brake Caliper Assy
◆ 294 (2,998, 217)
49 (500, 36)
◆ Cotter Pin
127 (1,295, 94)
N·m (kgf·cm, ft·lbf) : Specified torque
◆ Non–reusable part
C91581

FRONT WHEEL ALIGNMENT

2605T–01

ADJUSTMENT

1. INSPECT TIRE(See page 28–1)

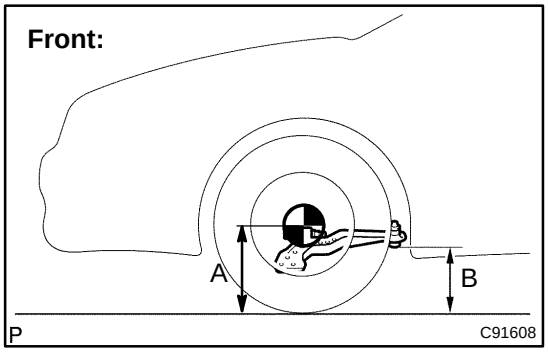

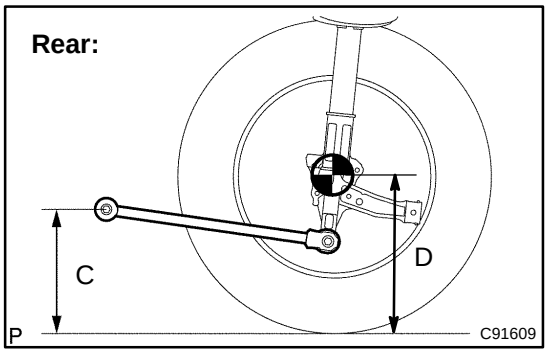

2. MEASURE VEHICLE HEIGHT

Vehicle height:

1MZ–FE COMFORT:

Front (A – B)	120 mm (4.72 in.)
Rear (D – C)	46 mm (1.81 in.)

1MZ–FE PREMIUM:

	USA, Canada	Mexico
Front (A – B)	119 mm (4.69 in.)	106 mm (4.17 in.)
Rear (D – C)	47 mm (1.85 in.)	33 mm (1.30 in.)

1MZ–FE SPORT:

Front (A – B)	120 mm (4.72 in.)
Rear (D – C)	48 mm (1.89 in.)

2AZ–FE COMFORT:

	USA, Canada	Mexico
Front (A – B)	119 mm (4.69 in.)	106 mm (4.17 in.)
Rear (D – C)	45 mm (1.77 in.)	33 mm (1.30 in.)

2AZ–FE PREMIUM:

Front (A – B)	120 mm (4.72 in.)
Rear (D – C)	45 mm (1.77 in.)

2AZ–FE SPORT:

Front (A – B)	120 mm (4.72 in.)
Rear (D – C)	48 mm (1.89 in.)

Measuring points:

A: Ground clearance of front wheel center

B: Ground clearance of lower suspension arm No. 2 set bolt center

C: Ground clearance of strut rod set bolt center

D: Ground clearance of rear wheel center

NOTICE:

Before inspecting the wheel alignment, adjust the vehicle height to the specified value.

If the vehicle height is not the specified value, try to adjust it by pushing down on or lifting the body.

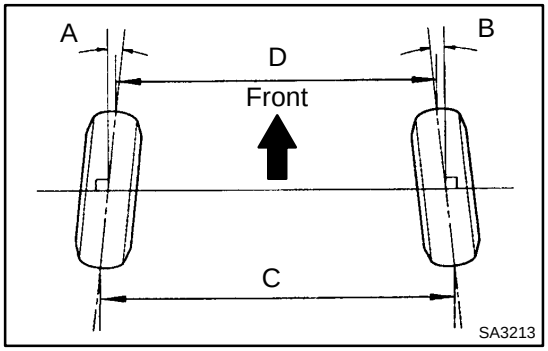

3. INSPECT TOE–IN

Toe–in:

Toe–in (total)	A + B: 0° ± 12' (0° ± 0.2°) C – D: 0 ± 2 mm (0 ± 0.08 in.)

If the toe–in is not within the specified value, adjust it at the rack ends.

4. ADJUST TOE–IN

(a) Remove the rack boot set clips.

(b) Loosen the tie rod end lock nuts.

(c) Turn the right and left rack ends by an equal amount to adjust the toe–in.

HINT:

Try to adjust the toe–in to the center of the specified value.

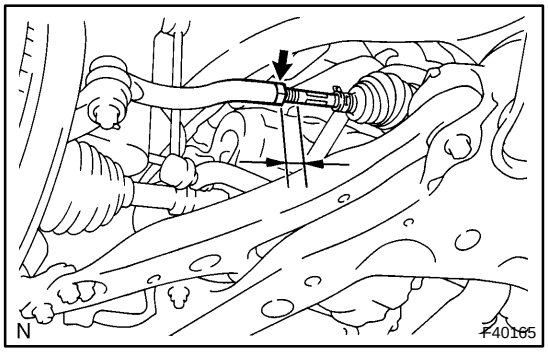

(d) Make sure that the lengths of the right and left rack ends are the same.

(e) Torque the tie rod end lock nuts.

Torque: 74 N·m (755 kgf·cm, 55 ft·lbf)

(f) Place the boots on the seats and install the clips.

HINT:

Make sure that the boots are not twisted.

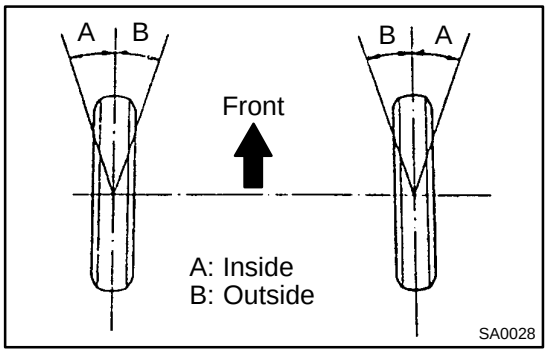

5. INSPECT WHEEL ANGLE

(a) Turn the steering wheel fully and measure the turning angle.

Wheel turning angle:

15 inch:

	USA, Canada	Mexico
Inside wheel	39˚04' ± 2˚ (39.07˚ ± 2˚)	39˚30' ± 2˚ (39.50˚ ± 2˚)
Outside wheel: Reference	33˚44' (33.73˚)	34˚02' (34.03˚)

16 inch:

	USA, Canada	Mexico
Inside wheel	36˚39' ± 2˚ (36.65˚ ± 2˚)	37˚00' ± 2˚ (37.00˚ ± 2˚)
Outside wheel: Reference	32˚11' (32.18˚)	32˚28' (32.47˚)

If the right and left inside wheel angles differ from the specified value, check the right and left rack end lengths.

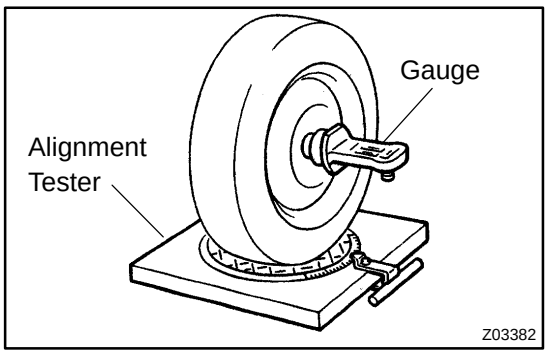

6. INSPECT CAMBER, CASTER AND STEERING AXIS INCLINATION

(a) Install the camber–caster–kingpin gauge or position vehicle on wheel alignment tester.

(b) Inspect the camber, caster and steering axis inclination.

Camber and steering axis inclination:

	USA, Canada	Mexico
Camber	–0˚43' ± 45' (–0.72˚ ± 0.75˚)	–0˚33' ± 45' (–0.55˚ ± 0.75˚)
Right–left error	45' (0.75˚) or less	45' (0.75˚) or less
Steering axis inclination	11˚27' ± 45' (11.45˚ ± 0.75˚)	11˚05" ± 45' (11.08˚ ± 0.75˚)
Right–left error	45' (0.75˚) or less	45' (0.75˚) or less

Caster

1MZ–FE SPORT:

Caster	2°39' ± 45' (2.65° ± 0.75°)
Right–left error	45' (0.75°) or less

1MZ–FE Except SPORT:

	USA, Canada	Mexico
Caster	2°37' ± 45' (2.62° ± 0.75°)	2°33' ± 45' (2.55° ± 0.75°)
Right–left error	45' (0.75°) or less	45' (0.75°) or less

2AZ–FE SPORT:

Caster	2°43' ± 45' (2.72° ± 0.75°)
Right–left error	45' (0.75°) or less

2AZ–FE Except SPORT:

	USA, Canada	Mexico
Caster	2°39' ± 45' (2.65° ± 0.75°)	2°36' ± 45' (2.60° ± 0.75°)
Right–left error	45' (0.75°) or less	45' (0.75°) or less

If the caster and steering axis inclination are not within the specified values, after the camber has been correctly adjusted, recheck the suspension parts for damaged and/or worn out parts.

7. ADJUST CAMBER

NOTICE:

After the camber has been adjusted, inspect the toe–in.

(a) Remove the front wheel.

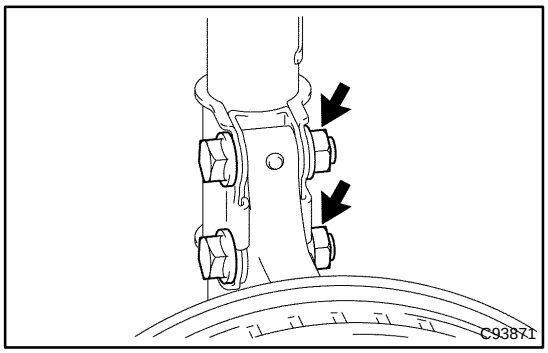

(b) Remove the 2 nuts on the lower side of the shock absorber.

NOTICE:

When removing nut, stop the bolt from rotating and loosen the nut.

(c) Clean the installation surfaces of the shock absorber and the steering knuckle.

(d) Temporarily install the 2 nuts.

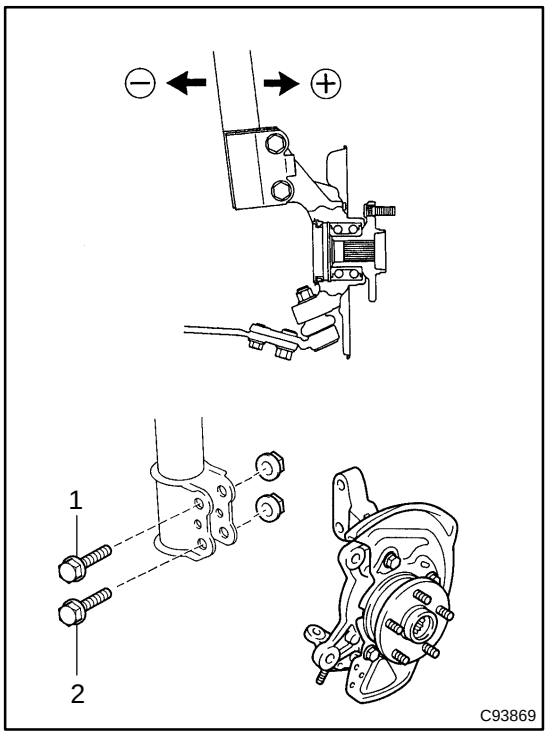

(e) Adjust the camber by pushing or pulling the lower side of the shock absorber in the direction in which the camber adjustment is required.

(f) Tighten the nuts.

Torque: 210 N·m (2,141 kgf·cm, 155 ft·lbf)

NOTICE:

When installing nut, stop the bolt from rotating and torque the nut.

(g) Install the front wheel.

Torque: 103 N·m (1,050 kgf·cm, 76 ft·lbf)

(h) Check the camber.

HINT:

- Try to adjust the camber to the center of the specified value.
- Adjusting value for the set bolts is 6’ – 30’ (0.1˚ – 0.5˚).

If the camber is not within the specified value, using the following table, estimate how much additional camber adjustment will be required, and select the camber adjusting bolt.

NOTICE:

Tighten the adjusting bolt with a washer and a new nut.

Bolt / Adjusting Value	Set Bolt		Adjusting Bolt					
	90105–17008		90105–17009		90105–17010		90105–17011	
			1 Dot		2 Dots		3 Dots	
	11		•11		•11•		•11••	
	1	2	1	2	1	2	1	2
15’	●			●				
30’	●					●		
45’	●							●
1°00’			●					●
1°15’					●			●
1°30’							●	●

(i) Do the steps mentioned above again. At step (b), replace 1 or 2 selected bolts.

HINT:

When replacing the 2 bolts, replace 1 bolt for each time.

FRONT SHOCK ABSORBER WITH COIL SPRING

2601F–02

OVERHAUL

HINT:

COMPONENTS: See page 26–3

1. REMOVE FRONT WHEEL

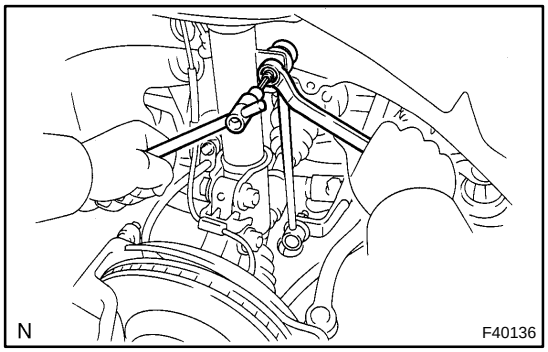

2. DISCONNECT FRONT STABILIZER LINK ASSY LH

(a) Remove the nut and disconnect the front stabilizer link assy LH from the shock absorber assy front LH.

HINT:

If the ball joint turns together with the nut, use a hexagon (6 mm) wrench to hold the stud.

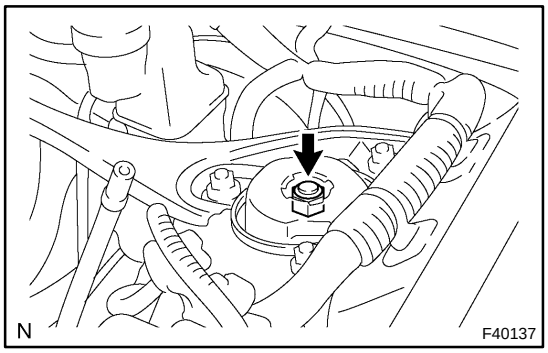

3. REMOVE FRONT SHOCK ABSORBER WITH COIL SPRING

(a) Loosen the lock nut.

NOTICE:

- **Do not loosen except for the case with disassembling the shock absorber assy front LH with coil spring.**
- **Do not remove the lock nut.**

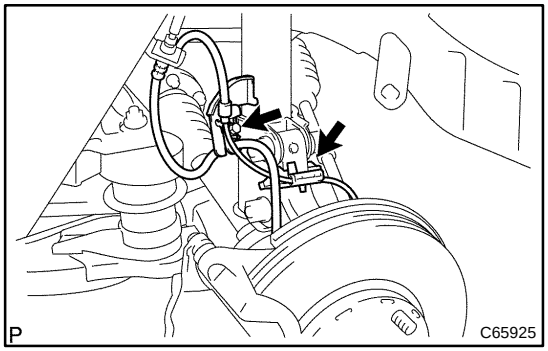

(b) w/ ABS:
Remove the bolt, disconnect the front flexible hose No. 1 and speed sensor front LH.

(c) w/o ABS:
Remove the bolt, disconnect the front flexible hose No. 1.

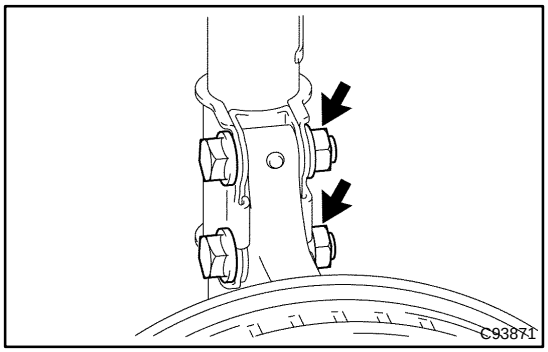

(d) Remove the 2 nuts and 2 bolts on the lower side of front shock absorber with coil spring.

NOTICE:

When removing bolt, stop the bolt from rotating and loosen the nut.

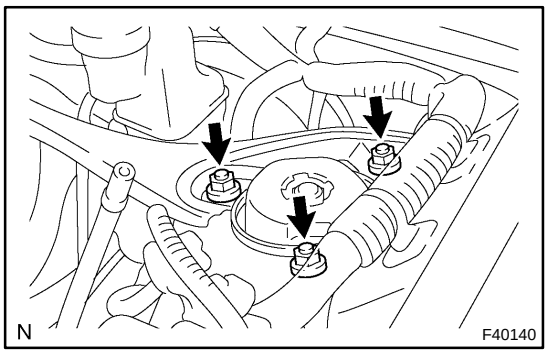

(e) Remove the 3 nuts on the upper side of the front shock absorber with coil spring.
(f) Remove the front shock absorber with the coil spring.

NOTICE:
Be careful not to drop the 2 washers in the case that there is front suspension upper brace center.

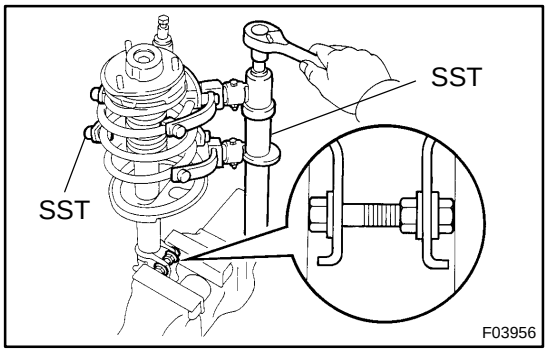

4. FIX FRONT SHOCK ABSORBER WITH COIL SPRING

(a) Install 2 nuts and a bolt to the bracket at the lower side of the front shock absorber with coil spring and secure it in a vise.

5. REMOVE SHOCK ABSORBER ASSY FRONT LH

(a) Using SST, compress the front coil spring LH.
SST 09727–30021

NOTICE:
Do not use an impact wrench. It will damage the SST.
HINT:
Use 2 of the same type of SST.

(b) Remove the front suspension support sub–assy LH, front suspension support bearing LH, front coil spring seat upper LH, front coil spring insulator upper LH, front coil spring LH, front spring bumper LH and front coil spring insulator upper LH.

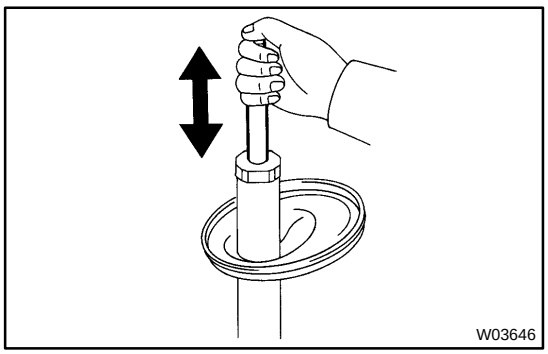

6. INSPECT SHOCK ABSORBER ASSY FRONT LH

(a) Compress and extend the shock absorber rod and check that there is no abnormal resistance or unusual sound during operation.

If there is any abnormality, replace the shock absorber assy front LH with a new one.

NOTICE:
When disposing of the shock absorber assy front LH, see DISPOSAL on page 26–14.

7. INSTALL SHOCK ABSORBER ASSY FRONT LH

(a) Install the front coil spring insulator lower LH onto the shock absorber assy front LH.
(b) Install the front spring bumper LH to the piston rod.

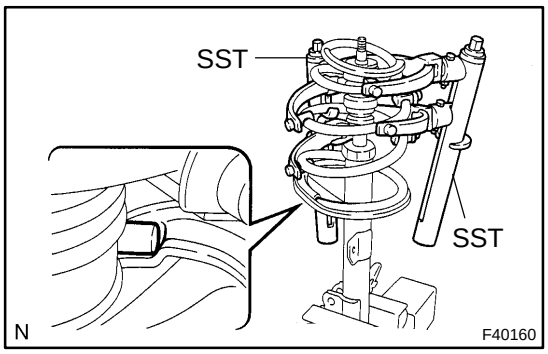

(c) Using SST, compress the front coil spring LH.
SST 09727–30021

NOTICE:

Do not use an impact wrench. It will damage the SST.

HINT:

Use 2 of the same type of SST.

(d) Install the front coil spring LH to the shock absorber assy front LH.

HINT:

Fit the lower end of the front coil spring LH into the gap of the spring lower seat.

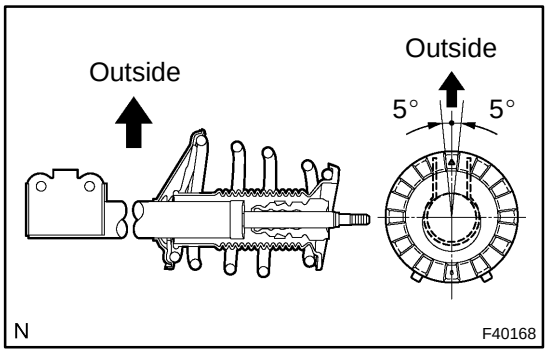

(e) Install the front coil spring insulator upper LH as shown in the illustration.

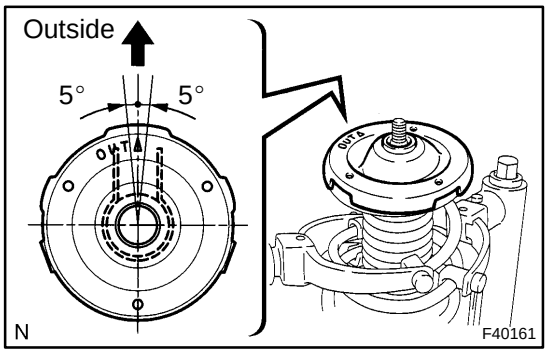

(f) Install the front coil spring seat upper LH to the shock absorber assy front LH with the mark facing to the outside of the vehicle.

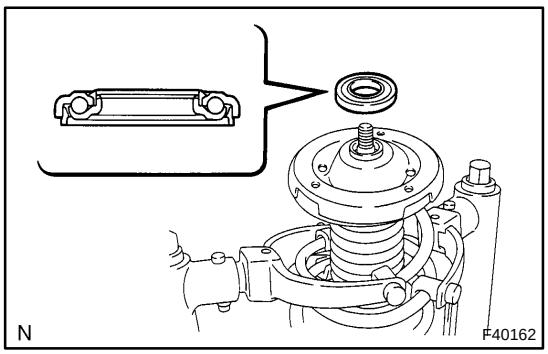

(g) Install a new front suspension support bearing LH.

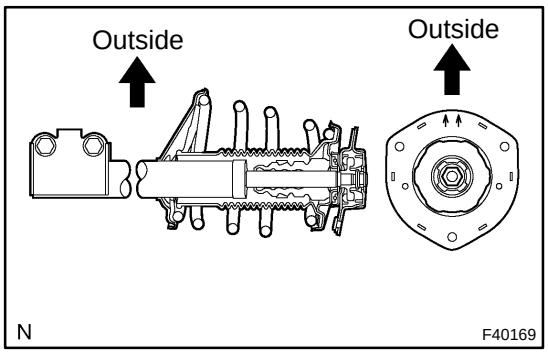

(h) Install the front suspension support sub–assy LH with the mark facing to the outside of the vehicle.

(i) Temporarily tighten the new lock nut.

8. INSTALL FRONT SHOCK ABSORBER WITH COIL SPRING

(a) Install the front shock absorber with coil spring as shown in the illustration.

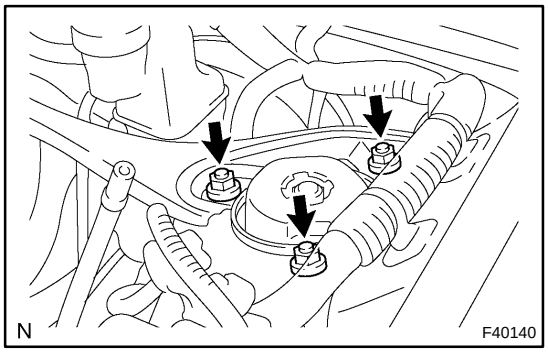

(b) Install the 3 nuts to the upper side of front shock absorber with coil spring.

Torque: 80 N·m (816 kgf·cm, 59 ft·lbf)

NOTICE:

Be careful not to drop the 2 washers in the case that there is front suspension upper brace center.

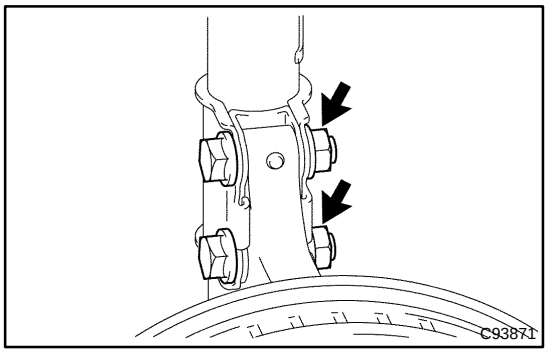

(c) Install the 2 bolts and 2 nuts to the lower side of front shock absorber with coil spring.

Torque: 210 N·m (2,141 kgf·cm, 155 ft·lbf)

NOTICE:

When installing bolt, stop the bolt from rotating and torque the nut.

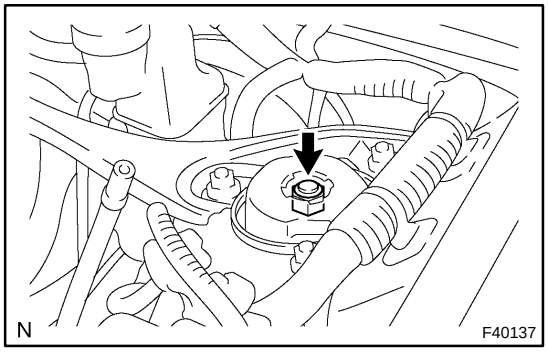

(d) Fully tighten the lock nut.

Torque: 49 N·m (500 kgf·cm, 36 ft·lbf)

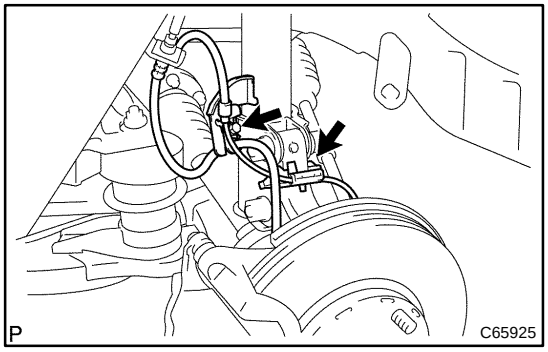

(e) w/ ABS:

Install the front flexible hose No. 1 and speed sensor front LH with the bolt.

Torque: 18.8 N·m (192 kgf·cm, 14 ft·lbf)

(f) w/o ABS:

Install the front flexible hose No. 1 with the bolt.

Torque: 18.8 N·m (192 kgf·cm, 14 ft·lbf)

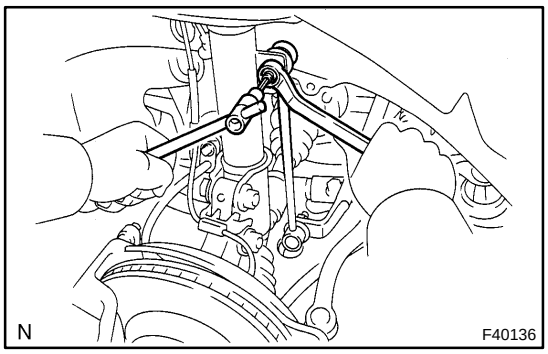

9. INSTALL FRONT STABILIZER LINK ASSY LH

(a) Install the front stabilizer link assy LH with the nut.
Torque: 74 N·m (755 kgf·cm, 55 ft·lbf)

HINT:
If the ball joint turns together with the nut, use a hexagon (6 mm) wrench to hold the stud.

10. INSTALL FRONT WHEEL
Torque: 103 N·m (1,050 kgf·cm, 76 ft·lbf)

11. INSPECT AND ADJUST FRONT WHEEL ALIGNMENT(See page 26–5)

2601G–02

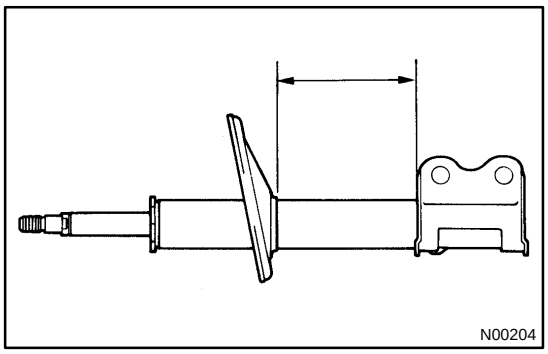

DISPOSAL

HINT:

Dispose the RH side by the same procedures with the LH side.

1. DISPOSE SHOCK ABSORBER ASSY FRONT LH

(a) Fully extend the shock absorber rod.

(b) Using a drill, make a hole in the cylinder as shown in the illustration to discharge the gas inside.

CAUTION:

- **When drilling, chips may fly out, work carefully.**
- **The gas is colorless, odorless and non–poisonous.**

FRONT SUSPENSION ARM SUB–ASSY LOWER NO.1 LH

2601H–02

REPLACEMENT

HINT:

COMPONENTS: See page 26–3.

1. REMOVE ENGINE ASSEMBLY WITH TRANSAXLE(1MZ–FE ENGINE TYPE)(See page 14–155)

2. REMOVE ENGINE ASSEMBLY WITH TRANSAXLE(2AZ–FE ENGINE TYPE)(See page 14–22)

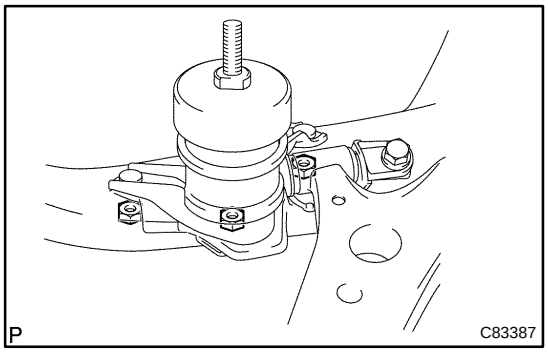

3. REMOVE TRANSVERSE ENGINE ENGINE MOUNTING INSULATOR(A/T TRANSAXLE)

(a) Remove the 3 nuts and transverse engine engine mounting insulator.

4. REMOVE TRANSVERSE ENGINE ENGINE MOUNTING INSULATOR(M/T TRANSAXLE)

(a) Remove the 3 nuts and transverse engine engine mounting insulator.

(b) Remove the 4 bolts and bracket from the manual transmission.

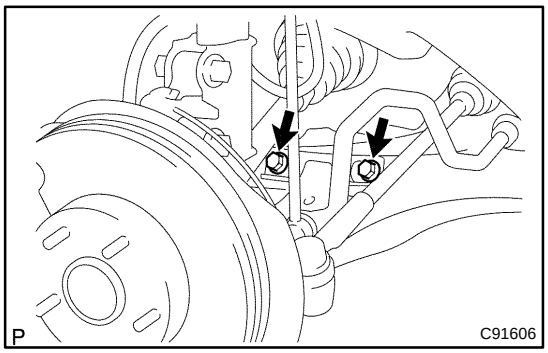

5. REMOVE FRONT SUSPENSION ARM SUB–ASSY LOWER NO.1 LH

(a) Remove the 2 bolts on the front side of the front suspension arm sub–assy lower No. 1 LH.

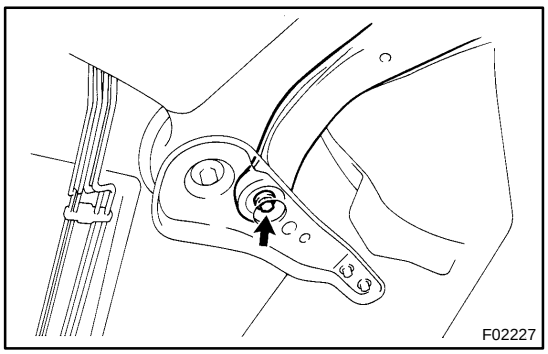

(b) Remove the bolt and nut on the rear side of the front suspension arm sub–assy lower No. 1 LH.

(c) Remove the front suspension arm sub–assy lower No. 1 LH.

(d) Remove the front lower arm bush stopper from the front suspension arm sub–assy lower No. 1 LH.

6. INSTALL FRONT SUSPENSION ARM SUB–ASSY LOWER NO.1 LH

(a) Install the front lower arm bush stopper to the front suspension arm sub–assy lower No. 1 LH.

(b) Install the front suspension arm sub–assy lower No. 1 LH with the 2 bolts to the front side.
Torque: 200 N·m (2,039 kgf·cm, 148 ft·lbf)

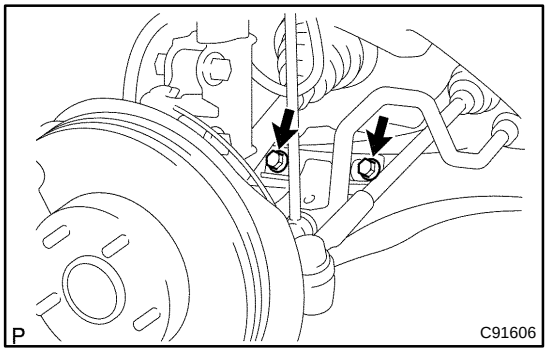

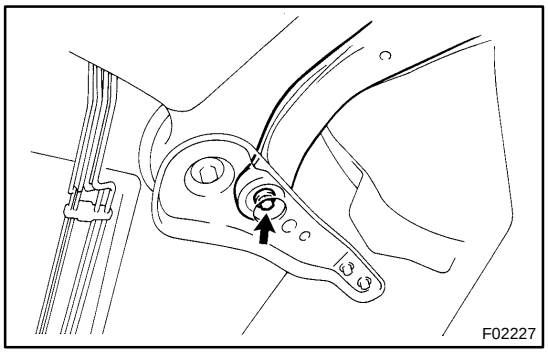

(c) Install the front suspension arm sub–assy lower No. 1 LH with the bolt and nut to the rear side.
Torque: 206 N·m (2,101 kgf·cm, 152 ft·lbf)

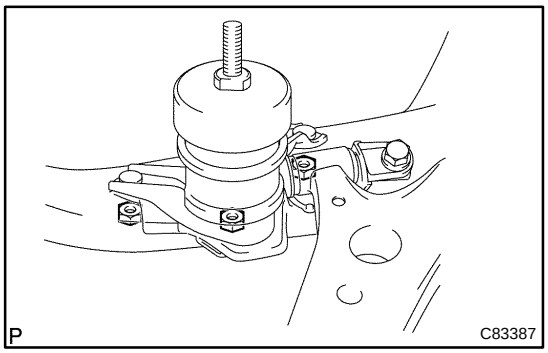

7. INSTALL TRANSVERSE ENGINE ENGINE MOUNTING INSULATOR(A/T TRANSAXLE)

(a) Install the transverse engine engine mounting insulator with the 3 nuts.
Torque: 87 N·m (887 kgf·cm, 64 ft·lbf)

8. INSTALL TRANSVERSE ENGINE ENGINE MOUNTING INSULATOR(M/T TRANSAXLE)

(a) Install the bracket with the 4 bolts to the manual transmission.
Torque: 64 N·m (653 kgf·cm, 47 ft·lbf)

(b) Install the transverse engine engine mounting insulator with the 3 nuts.
Torque: 87 N·m (887 kgf·cm, 64 ft·lbf)

9. INSTALL ENGINE ASSEMBLY WITH TRANSAXLE(2AZ–FE ENGINE TYPE)(Seepage 14–22)

10. INSTALL ENGINE ASSEMBLY WITH TRANSAXLE(1MZ–FE ENGINE TYPE)(Seepage 14–155)

LOWER BALL JOINT ASSY FRONT LH

2601I–02

REPLACEMENT

HINT:

COMPONENTS: See page 26–3.

1. **REMOVE FRONT WHEEL**
2. **REMOVE FRONT AXLE HUB LH NUT**
   (See page 30–8)
   SST 09930–00010
3. **DISCONNECT SPEED SENSOR FRONT LH(W/ ABS)**
   (See page 30–8)
4. **DISCONNECT FRONT DISC BRAKE CALIPER ASSY LH(See page 30–21)**
5. **REMOVE FRONT DISC**
6. **DISCONNECT TIE ROD ASSY LH**
   (See page 30–8)
   SST 09628–62011
7. **DISCONNECT FRONT SUSPENSION ARM SUB–ASSY LOWER NO.1 LH**
   (See page 30–8)
8. **REMOVE FRONT AXLE ASSY LH(See page 30–21)**
9. **REMOVE LOWER BALL JOINT ASSY FRONT LH**
   (See page 30–21)
   SST 09628–62011

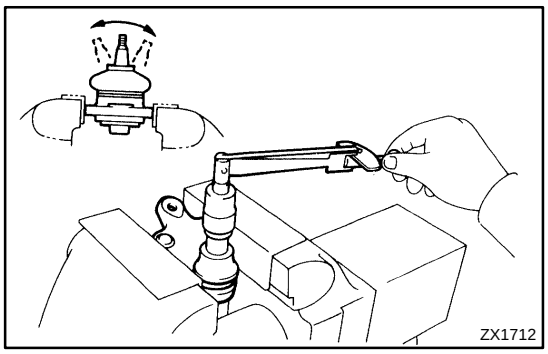

10. **INSPECT LOWER BALL JOINT ASSY FRONT LH**

(a) As shown in the illustration, flip the ball joint stud back and forth 5 times, before installing the nut.

(b) Using a torque wrench, turn the nut continuously at a rate of 3 – 5 seconds per 1 turn and take the torque reading on the 5th turn.
Turning torque:
0.98 – 3.43 N·m (10 – 35 kgf·cm, 8.7 – 30 in.·lbf)

11. **INSTALL LOWER BALL JOINT ASSY FRONT LH**
    (See page 30–21)
12. **INSTALL FRONT AXLE ASSY LH(See page 30–21)**
13. **INSTALL FRONT SUSPENSION ARM SUB–ASSY LOWER NO.1 LH**
    (See page 30–8)
14. **INSTALL TIE ROD ASSY LH**
    (See page 30–8)
15. **INSTALL FRONT DISC**
16. **INSTALL FRONT DISC BRAKE CALIPER ASSY LH(See page 30–21)**
17. **INSTALL SPEED SENSOR FRONT LH(W/ ABS)**
    (See page 30–8)
18. **INSTALL FRONT AXLE HUB LH NUT**
    (See page 30–8)

19. INSTALL FRONT WHEEL
Torque: 103 N·m (1,050 kgf·cm, 76 ft·lbf)
20. INSPECT AND ADJUST FRONT WHEEL ALIGNMENT(See page 26–5)
21. CHECK ABS SPEED SENSOR SIGNAL(W/ ABS)
w/ VSC (See page 05–452)
w/o VSC (BOSCH MADE) (See page 05–363)
w/o VSC (DENSO MADE) (See page 05–404)

STABILIZER BAR FRONT

REPLACEMENT

2601J–02

HINT:

COMPONENTS: See page 26–3.

1. REMOVE FRONT WHEEL

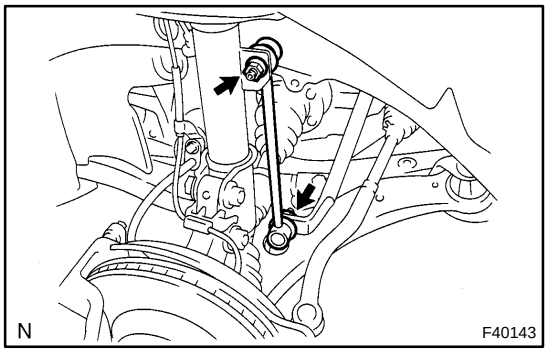

2. REMOVE FRONT STABILIZER LINK ASSY LH

(a) Remove the 2 nuts and front stabilizer link assy LH.

HINT:

If the ball joint turns together with the nut, use a hexagon (6 mm) wrench to hold the stud.

3. REMOVE FRONT STABILIZER LINK ASSY RH

HINT:

Remove the RH side by the same procedures with the LH side.

4. REMOVE FRONT SUSPENSION MEMBER DYNAMIC DAMPER(EXCEPT 1MZ–FE ENGINE TYPE)

(a) Remove the 2 bolts and front suspension member dynamic damper from the front frame assy.

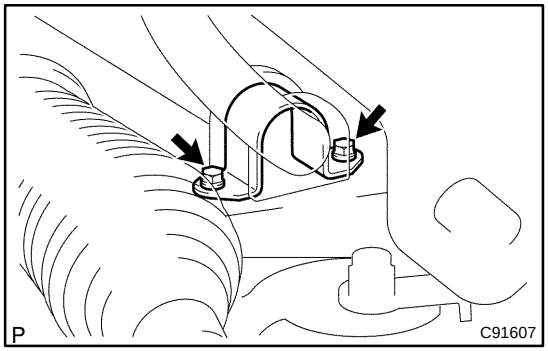

5. REMOVE FRONT STABILIZER BRACKET NO.1 LH

(a) Remove the 2 bolts and 2 front stabilizer brackets No. 1 LH.

6. REMOVE FRONT STABILIZER BRACKET NO.1 RH

HINT:

Remove the RH side by the same procedures with the LH side.

7. DISCONNECT TIE ROD ASSY LH

(See page 30–8)

SST 09628–62011

8. DISCONNECT TIE ROD ASSY RH

SST 09628–62011

HINT:

Separate the RH side by the same procedures with the LH side.

9. DISCONNECT STEERING GEAR OUTLET RETURN TUBE
(See page 51–29)
SST 09023–00100

10. DISCONNECT PRESSURE FEED TUBE ASSY
(See page 51–29)
SST 09023–00100

11. DISCONNECT STEERING INTERMEDIATE SHAFT SUB–ASSY
(See page 51–29)

12. REMOVE RACK & PINION POWER STEERING GEAR ASSY
(See page 51–29)

13. REMOVE STABILIZER BAR FRONT

14. REMOVE FRONT STABILIZER BAR BUSH NO.1

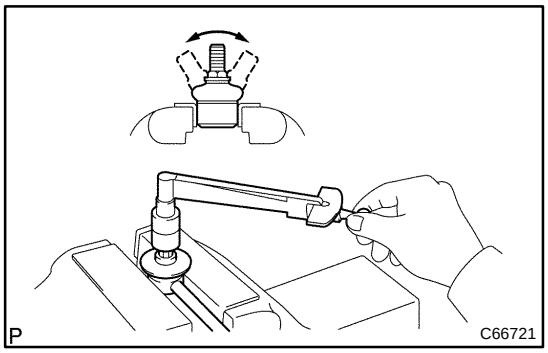

15. INSPECT FRONT STABILIZER LINK ASSY LH

(a) As shown in the illustration, flip the ball joint stud back and forth 5 times, before installing the nut.

(b) Using a torque wrench, turn the nut continuously at a rate of 2 – 4 seconds per 1 turn and take the torque reading on the 5th turn.
Turning torque:
0.05 – 1.96 N·m (0.5 – 20 kgf·cm, 0.4 – 17.4 in.·lbf)

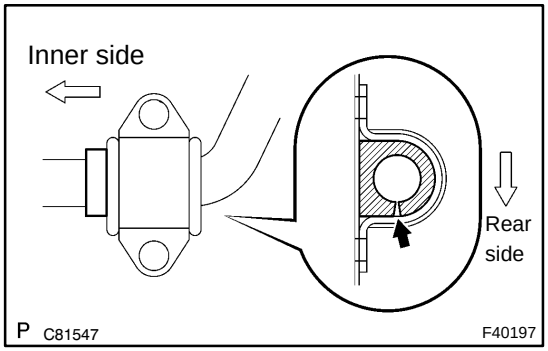

16. INSTALL FRONT STABILIZER BAR BUSH NO.1

HINT:

Install the bushing to the inner side of the bushing stopper on the stabilizer bar.

17. INSTALL STABILIZER BAR FRONT

18. INSTALL RACK & PINION POWER STEERING GEAR ASSY
(See page 51–29)

19. INSTALL STEERING INTERMEDIATE SHAFT SUB–ASSY
(See page 51–29)

20. INSTALL PRESSURE FEED TUBE ASSY
(See page 51–29)
SST 09023–00100

21. INSTALL STEERING GEAR OUTLET RETURN TUBE
(See page 51–29)
SST 09023–00100

22. INSTALL TIE ROD ASSY LH
(See page 30–8)

23. INSTALL TIE ROD ASSY RH

HINT:
Install the RH side by the same procedures with the LH side.

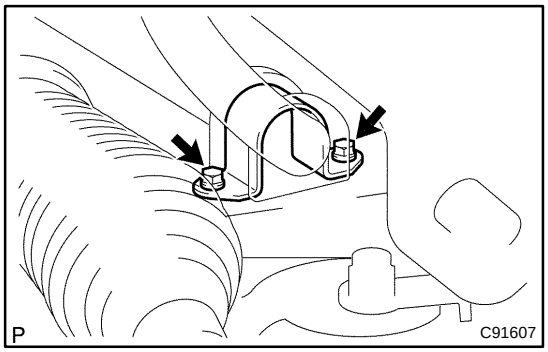

24. INSTALL FRONT STABILIZER BRACKET NO.1 LH

(a) Install the 2 front stabilizer brackets No. 1 LH with the 2 bolts.
Torque: 19 N·m (194 kgf·cm, 14 ft·lbf)

25. INSTALL FRONT STABILIZER BRACKET NO.1 RH

HINT:
Install the RH side by the same procedures with the LH side.

26. INSTALL FRONT SUSPENSION MEMBER DYNAMIC DAMPER(EXCEPT 1MZ–FE ENGINE TYPE)

(a) Install the front suspension member dynamic damper with 2 bolts to the front frame assy.
Torque: 29 N·m (296 kgf·cm, 21 ft·lbf)

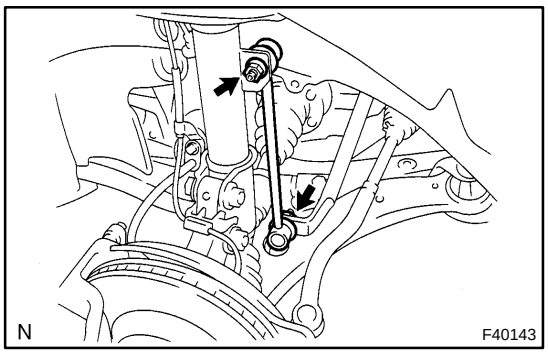

27. INSTALL FRONT STABILIZER LINK ASSY LH

(a) Install the front stabilizer link assy LH with the 2 nuts.
Torque: 74 N·m (755 kgf·cm, 55 ft·lbf)

HINT:
If the ball joint turns together with the nut, use a hexagon (6 mm) wrench to hold the stud.

28. INSTALL FRONT STABILIZER LINK ASSY RH

HINT:
Install the RH side by the same procedures with the LH side.

29. INSTALL FRONT WHEEL
Torque: 103 N·m (1,050 kgf·cm, 76 ft·lbf)

30. BLEED POWER STEERING FLUID(See page 51–3)

31. CHECK POWERSTEERING FLUID LEAKAGE

32. INSPECT AND ADJUST FRONT WHEEL ALIGNMENT(See page 26–5)

REAR SUSPENSION SYSTEM

2701I–03

PROBLEM SYMPTOMS TABLE

Use the table below to help you find the cause of the problem. The numbers indicate the priority of the likely cause of the problem. Check each part in order. If necessary, replace these parts.

Symptom	Suspect Area	See page
Bottoming	1. Vehicle (Overloaded) 2. Spring (Weak) 3. Shock absorber (Worn)	– 27–4 27–4
Sways/pitches	1. Tire (Worn or improperly inflated) 2. Stabilizer bar (Bent or broken) 3. Shock absorber (Worn)	28–1 27–17 27–4
Rear wheel shimmy	1. Tire (Worn or improperly inflated) 2. Wheel (Out of balance) 3. Shock absorber (Worn) 4. Wheel alignment (Incorrect) 5. Hub bearing (Worn)	28–1 28–1 27–4 26–5 27–3 30–2
Abnormal tire wear	1. Tire (Worn or improperly inflated) 2. Wheel alignment (Incorrect) 3. Shock absorber (Worn) 4. Suspension parts (Worn)	28–1 26–5 27–3 27–4 –

REAR SUSPENSION

COMPONENTS

2704V–02

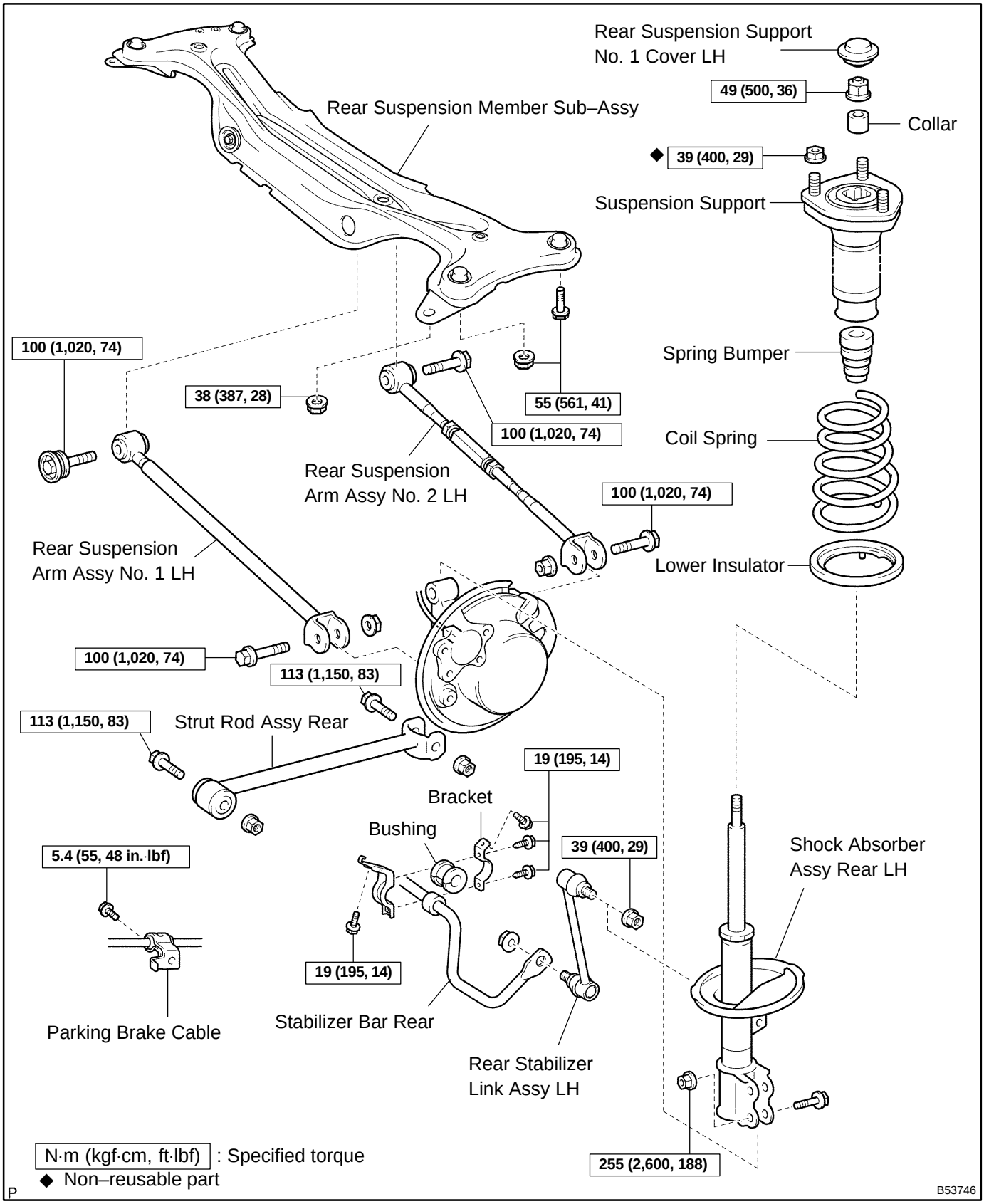

REAR WHEEL ALIGNMENT

2704P–02

ADJUSTMENT

1. INSPECT TIRE(See page 28–1)

2. MEASURE VEHICLE HEIGHT(See page 26–5)

NOTICE:

Before inspecting the wheel alignment, adjust the vehicle height to the specified value.

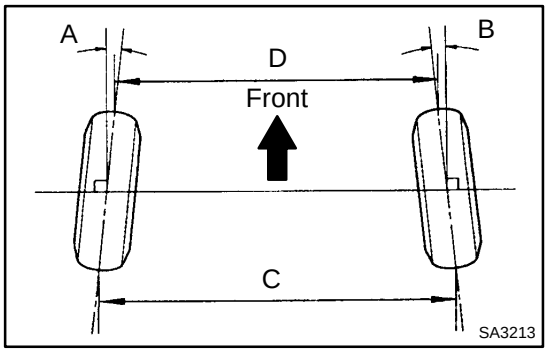

3. INSPECT TOE–IN

Toe–in:

Toe–in (total)	A + B: 0°22' ± 11' (0.4° ± 0.2°) C – D: 4 ± 2 mm (0.16 ± 0.08 in.)

If the toe–in is not within the specified value, inspect and replace the suspension parts if necessary.

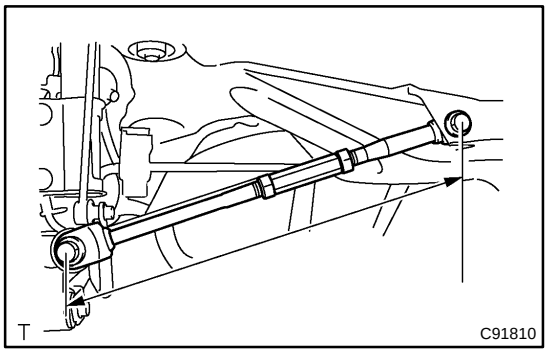

4. ADJUST TOE–IN

(a) Measure the lengths of the right and left No. 2 lower suspension arms.

No. 2 lower suspension arm length difference:
1.0 mm (0.039 in.) or less

If the left–right difference is larger than 1.0 mm (0.039 in.), adjust it by following the procedures below.

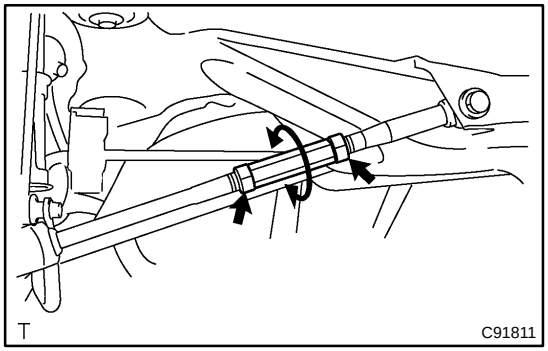

(b) Loosen the lock nuts.

(c) Turn the right and left adjusting tube by an equal amount to adjust toe–in.

HINT:

- Try to adjust the toe–in to the center value.
- One turn of the each adjusting tube will adjust the toe–in by approximately 67' (1°12', 10.8 mm, 0.425 in.).

(d) Torque the lock nut.

Torque: 56 N·m (570 kgf·cm, 41 ft·lbf)

5. INSPECT CAMBER

	USA, Canada	Mexico
Camber	–1°16' ± 45' (–1.27° ± 0.75°)	–1°09' ± 45' (–1.15° ± 0.75°)
Right–left error	45' (0.75°) or less	45' (0.75°) or less

HINT:

Camber is not adjustable. If the measurement is not within the specification, inspect the suspension parts for damaged and/or worn–out parts and replace them if necessary.

SHOCK ABSORBER ASSY REAR LH

2705Y–01

REPLACEMENT

HINT:
COMPONENTS: See page 27–2

1. REMOVE REAR WHEEL

2. REMOVE REAR SEAT CUSHION ASSY

(a) TMC made: (See page 72–34)
(b) TMMK made: (See page 72–38)

3. REMOVE REAR SIDE SEAT BACK ASSY RH

(a) TMC made: (See page 72–34)
(b) TMMK made: (See page 72–38)

4. REMOVE REAR SIDE SEAT BACK ASSY LH

HINT:
Remove the LH side by the same procedures with the RH side.

5. REMOVE ROOF SIDE GARNISH INNER RH
(See page 76–20)

6. REMOVE ROOF SIDE GARNISH INNER LH

HINT:
Remove the LH side by the same procedures with the RH side.

7. REMOVE CENTER STOP LAMP ASSY
(See page 65–16)

8. REMOVE PACKAGE TRAY TRIM PANEL ASSY

(a) TMC made: (See page 61–14)
(b) TMMK made: (See page 61–17)

9. REMOVE REAR SEAT 3 POINT TYPE BELT ASSY OUTER

(a) TMC made: (See page 61–14)
(b) TMMK made: (See page 61–17)

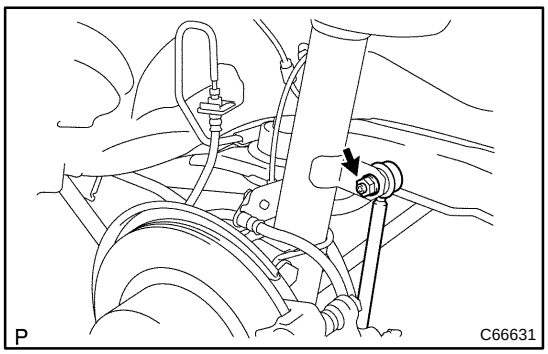

10. SEPARATE REAR STABILIZER LINK ASSY LH

(a) Remove the nut and disconnect the stabilizer bar link from the shock absorber.

HINT:
If the ball joint turns together with the nut, use a hexagon (5 mm) wrench to hold the stud.

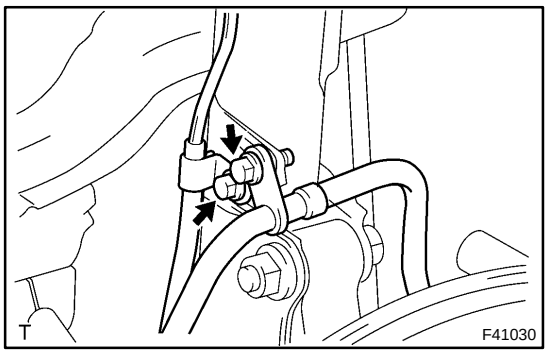

11. REMOVE REAR SHOCK ABSORBER WITH COIL SPRING

(a) Remove the 2 bolts, disconnect the flexible hose and ABS speed sensor wire harness from shock absorber.

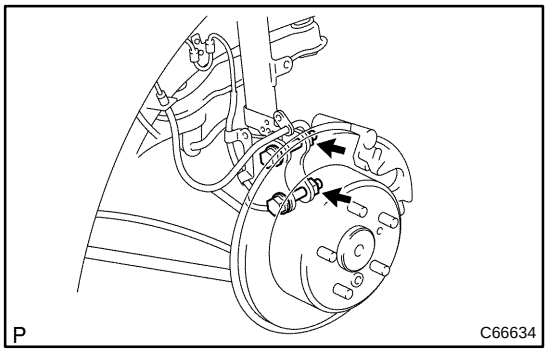

(b) Loosen the 2 nuts on the lower side of the shock absorber.

HINT:

Do not remove the 2 bolts.

(c) Support the rear axle carrier with a jack.

(d) Remove the rear suspension support No. 1 cover LH.

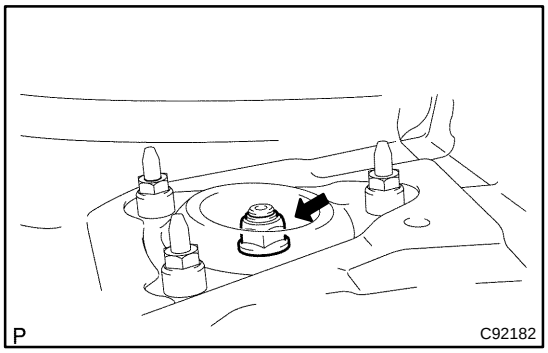

(e) Loosen the suspension support center nut.

NOTICE:

Do not remove the nut.

HINT:

If not disassembling the rear shock absorber, it is not necessary to loosen the nut.

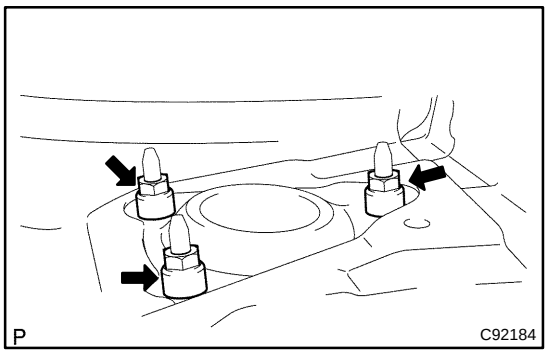

(f) Remove the 3 nuts of the suspension support.

(g) Lower the rear axle carrier and remove the 2 nuts and bolts on the lower side of the shock absorber.

(h) Remove the shock absorber with the coil spring.

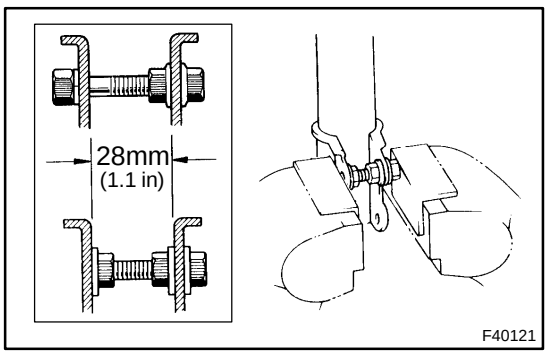

12. FIX REAR SHOCK ABSORBER WITH COIL SPRING

13. REMOVE SHOCK ABSORBER ASSY REAR LH

(a) Install 2 nuts and a bolt to the bracket at the lower part of the shock absorber, and secure it in a vise.

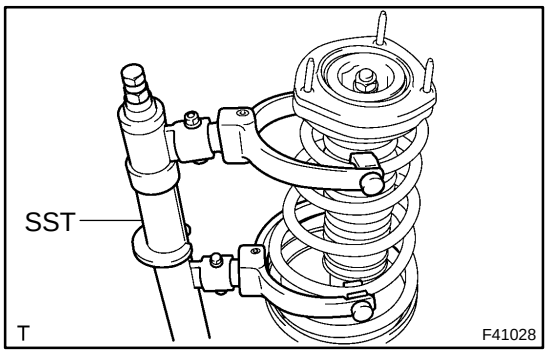

(b) Using SST, compress the coil spring.
SST 09727–30021

NOTICE:

Do not use an impact wrench. It will damage the SST.

(c) Remove the nut, collar and suspension support.

(d) Remove the coil spring, spring bumper and lower insulator.

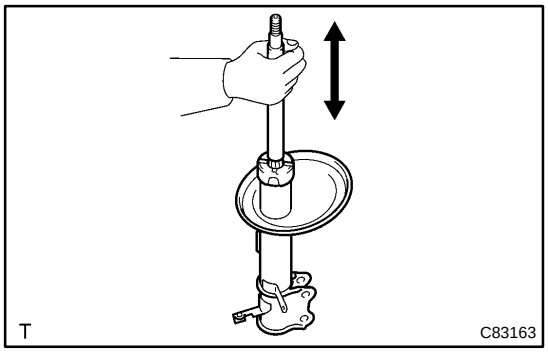

14. INSPECT SHOCK ABSORBER ASSY REAR LH

(a) Compress and extend the shock absorber rod, and check that there is no abnormal resistance or unusual operation sound.

If there is any abnormality, replace the shock absorber with a new one.

NOTICE:

When disposing the shock absorber, see DISPOSAL on page 27–9.

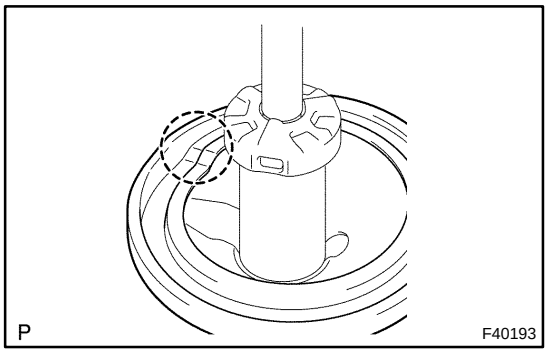

15. INSTALL SHOCK ABSORBER ASSY REAR LH

(a) Install the spring bumper.

(b) Install the lower insulator, as shown in the illustration.

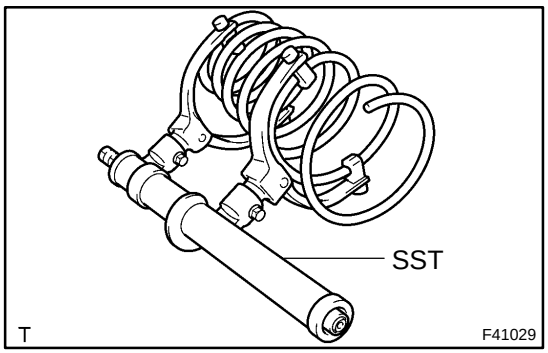

(c) Using SST, compress the coil spring.
SST 09727–30021

NOTICE:

Do not use an impact wrench. It will damage the SST.

(d) Install the coil spring to the shock absorber.

HINT:

- Fit the lower end of the coil spring into the gap of the lower seat.

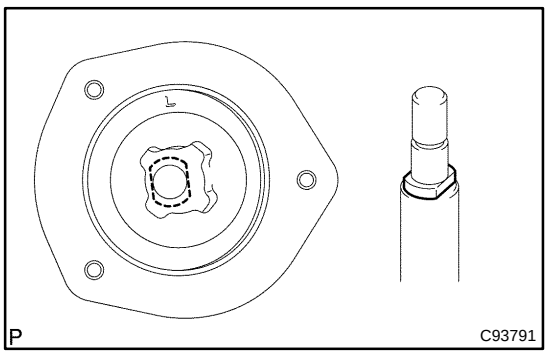

- Check that the 2 flat faces of the piston rod are positioned in parallel with the 2 flat faces of the rear suspension support.

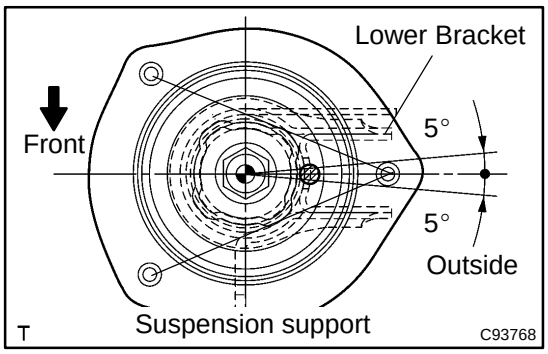

(e) Align the suspension support with the shock absorber lower bracket, as shown in the illustration.

HINT:

Set the suspension support so that the ribbed part of the suspension support faces out side.

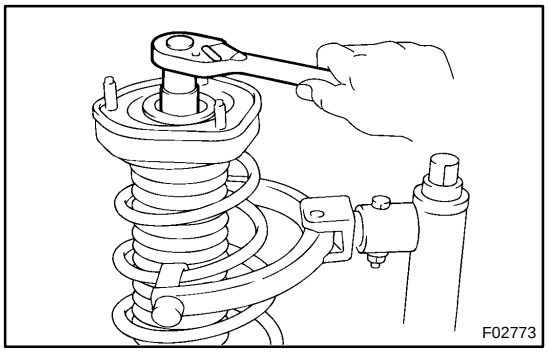

(f) Install the collar to the piston rod.

(g) Temporarily install a new nut.

(h) Remove the SST.

SST 09727–30021

HINT:

After removing SST, recheck the direction of the suspension support.

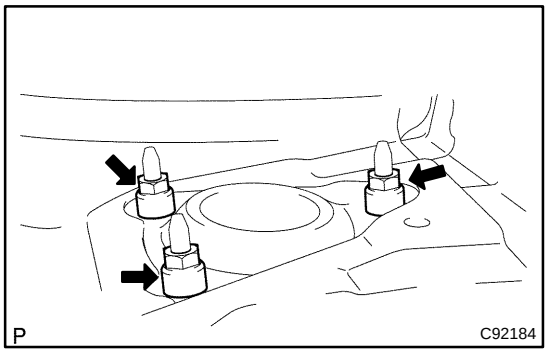

16. INSTALL REAR SHOCK ABSORBER WITH COIL SPRING

(a) Install the shock absorber with the coil spring and 3 nuts.

Torque: 39 N·m (400 kgf·cm, 29 ft·lbf)

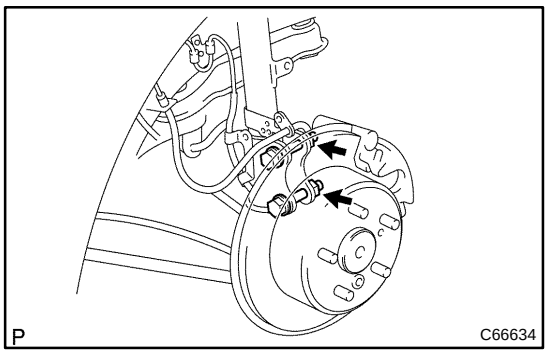

(b) Install the shock absorber with the coil spring, 2 bolts and nuts.

Torque: 255 N·m (2,600 kgf·cm, 188 ft·lbf)

HINT:

Keep the bolt fixed while tightening the nut.

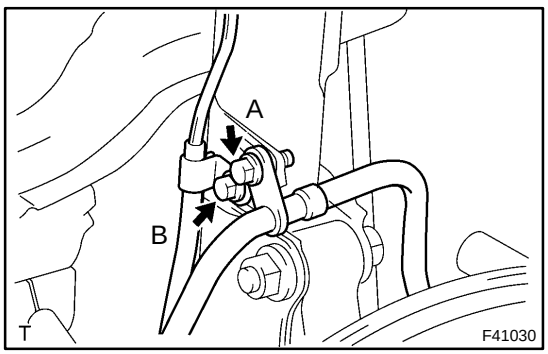

(c) Install the flexible hose and ABS speed sensor wire harness with the 2 bolts.

Torque:

A: Flexible hose: 19 N·m (194 kgf·cm, 14 ft·lbf)

B: ABS speed sensor wire harness:

5.5 N·m (56 kgf·cm, 49 in·lbf)

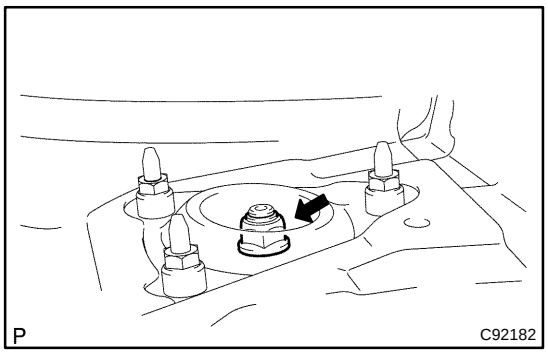

(d) Tighten the nut in the center of suspension support.
Torque: 49 N·m (500 kgf·cm, 36 ft·lbf)

HINT:
If the shock absorber has not been disassembled, it is necessary to torque the nut.

(e) Install the rear suspension support No. 1cover LH.

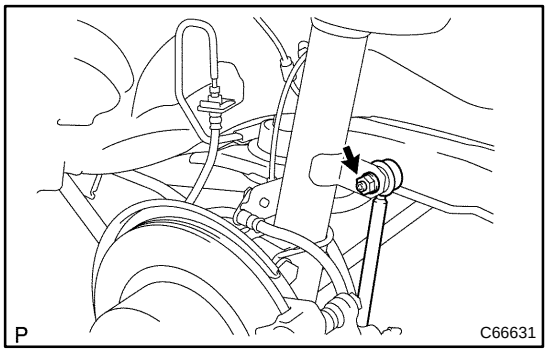

17. INSTALL REAR STABILIZER LINK ASSY LH

(a) Install the stabilizer bar link to the shock absorber with the nut.
Torque: 39 N·m (400 kgf·cm, 29 ft·lbf)

HINT:
If the ball joint turns together with the nut, use a hexagon (5 mm) wrench to hold the stud.

18. INSTALL REAR SEAT 3 POINT TYPE BELT ASSY OUTER

(a) TMC made: (See page 61–14)
(b) TMMK made: (See page 61–17)

19. INSTALL REAR SIDE SEAT BACK ASSY RH

(a) TMC made: (See page 72–34)
(b) TMMK made: (See page 72–38)

20. INSTALL REAR SIDE SEAT BACK ASSY LH

HINT:
Install the LH side by the same procedures with the RH side.

21. INSTALL REAR WHEEL
Torque: 103 N·m (1,050 kgf·cm, 76 ft·lbf)

22. INSPECT REAR WHEEL ALIGNMENT(See page 27–3)

2701L–03

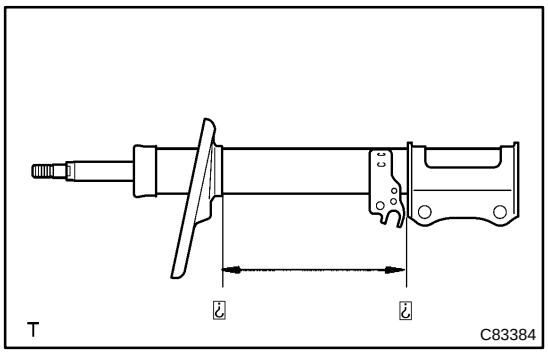

DISPOSAL

1. DISPOSE SHOCK ABSORBER ASSY REAR LH

(a) Fully extend the shock absorber rod.
(b) Using a drill, make a hole in the cylinder as shown in the illustration to discharge the gas inside.

CAUTION:

- **When drilling, chips may fly out, work carefully.**
- **The gas is colorless, odorless and non–poisonous.**

REAR SUSPENSION ARM ASSY NO.1 LH

2705Z–01

REPLACEMENT

HINT:

COMPONENTS: See page 27–2

1. REMOVE REAR WHEEL

2. REMOVE EXHAUST PIPE ASSY CENTER

(a) 1MZ–FE engine: See page 15–5

(b) 2AZ–FE engine: See page 15–2

3. REMOVE STABILIZER BAR REAR
(See page 27–17)

4. SEPARATE STRUT ROD ASSY REAR
(See page 27–19)

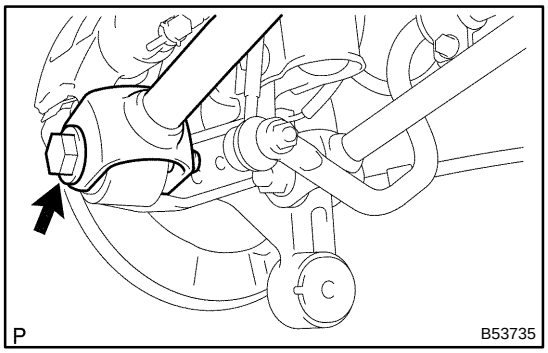

5. SEPARATE REAR SUSPENSION ARM ASSY NO.2 LH

(a) Remove the bolt, nut and rear suspension arm No. 2 (outer side) from the rear carrier.

HINT:

Keep the nut fixed while loosening and removing the bolt.

6. SEPARATE REAR SUSPENSION ARM ASSY NO.2 RH

HINT:

Separate the RH side by the procedures with the LH side.

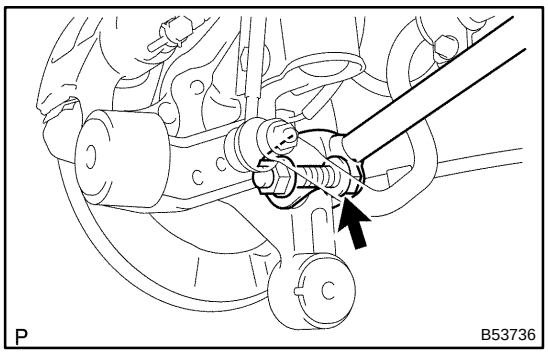

7. SEPARATE REAR SUSPENSION ARM ASSY NO.1 LH

(a) Remove the bolt, nut and rear suspension arm No. 1 (outer side) from rear axle carrier.

HINT:

Keep the nut fixed while loosening and removing the bolt.

8. SEPARATE REAR SUSPENSION ARM ASSY NO.1 RH

HINT:

Separate the RH side by the procedures with the LH side.

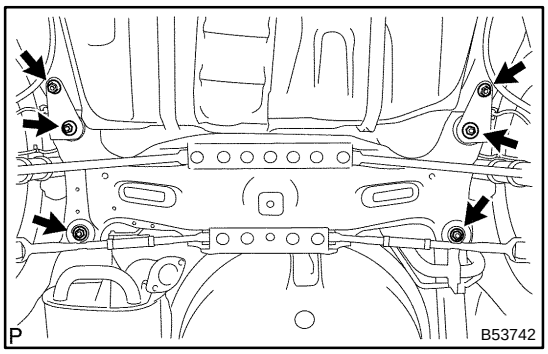

9. REMOVE REAR SUSPENSION MEMBER SUB–ASSY

(a) Support the rear suspension member with a jack.
(b) Remove the 4 nuts, 2 bolts and 4 retainers from the rear suspension member.

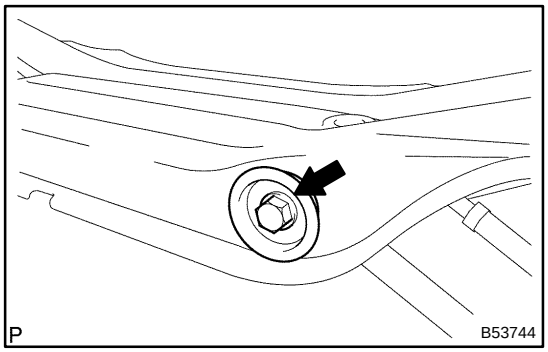

10. REMOVE REAR SUSPENSION ARM ASSY NO.1 LH

(a) Lower the rear suspension member.
(b) Remove the bolt and lower suspension arm No. 1.

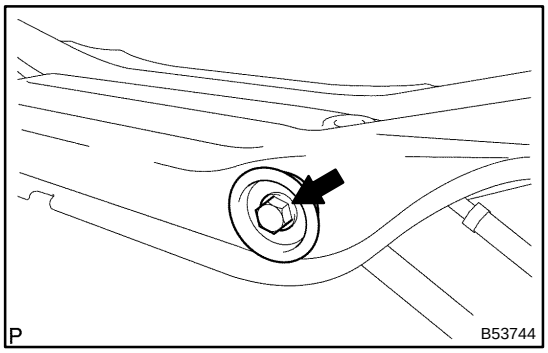

11. INSTALL REAR SUSPENSION ARM ASSY NO.1 LH

(a) Install the lower suspension No. 1 with the bolt, nut and temporary tighten the bolt.

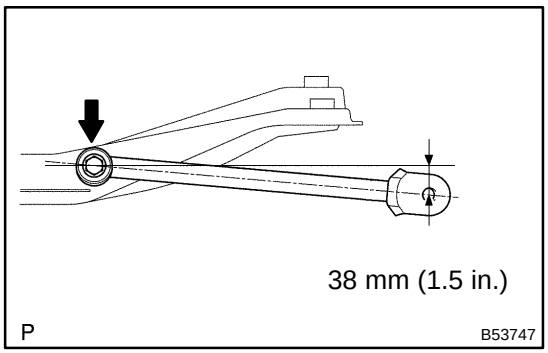

(b) Set suspension arm in the position shown in the illustration and fully tighten the bolt.
Torque: 100 N·m (1,020 kgf·cm, 74 ft·lbf)

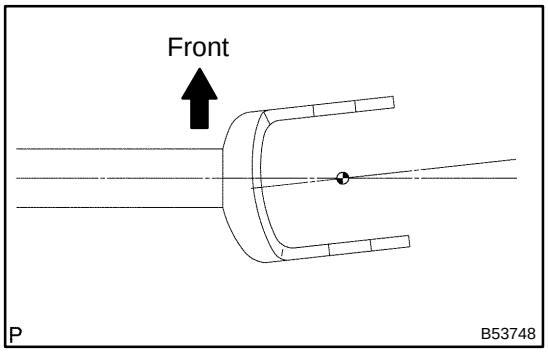

HINT:
Install the lower suspension No. 1 so that the bracket leans toward the front of the vehicle, as shown in the illustration.

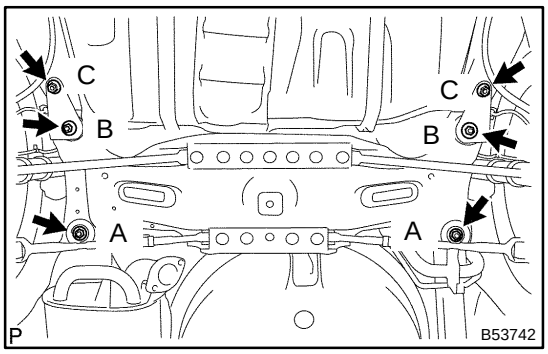

12. INSTALL REAR SUSPENSION MEMBER SUB–ASSY

(a) Support the rear suspension member with a jack.
(b) Install the rear suspension member with the 4 nuts, 2 bolts and 4 retainers.
Torque:
A, B: 55 N·m (561 kgf·cm, 41 ft·lbf)
C: 38 N·m (387 kgf·cm, 28 ft·lbf)

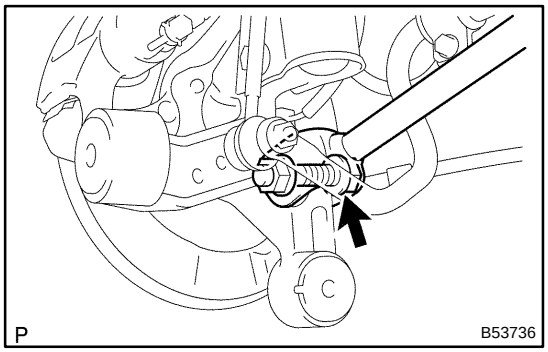

13. TEMPORARY TIGHTEN REAR SUSPENSION ARM ASSY NO.1 LH

(a) Connect the rear suspension arm No. 1 (outer side) to the rear axle carrier with the bolt and nut, and temporarily tighten the bolt and nut.

HINT:
Insert the bolt from the front side of the vehicle and temporarily install the bolt.

14. TEMPORARY TIGHTEN REAR SUSPENSION ARM ASSY NO.1 RH

HINT:
Temporarily tighten the RH side by the procedures with the LH side.

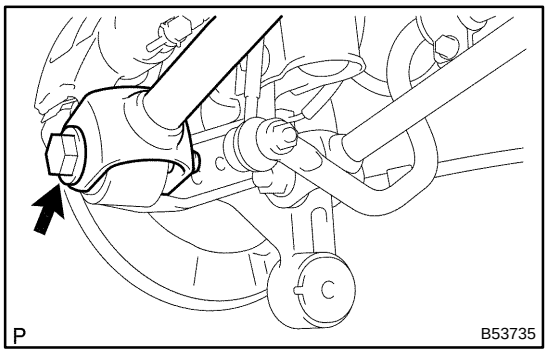

15. TEMPORARY TIGHTEN REAR SUSPENSION ARM ASSY NO.2 LH

(a) Connect the rear suspension arm No. 2 (outer side) to the rear axle carrier with the bolt and nut, and temporarily tighten the bolt.

HINT:
Insert the bolt from the rear side of the vehicle and temporarily install the bolt.

16. TEMPORARY TIGHTEN REAR SUSPENSION ARM ASSY NO.2 RH

HINT:
Temporarily tighten the RH side by the procedures with the LH side.

17. TEMPORARY TIGHTEN STRUT ROD ASSY REAR
(See page 27–19)

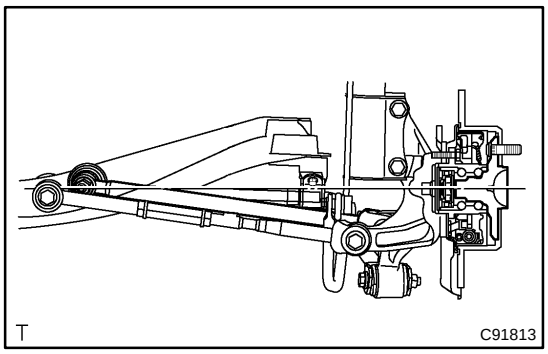

18. STABILIZE SUSPENSION

(a) Jack up the rear axle carrier, placing a wood block between them. Apply load to the suspension so that the installed bolt of the suspension arm assy No. 1 (vehicle side) is horizontally aligned with the center of the rear axle hub.

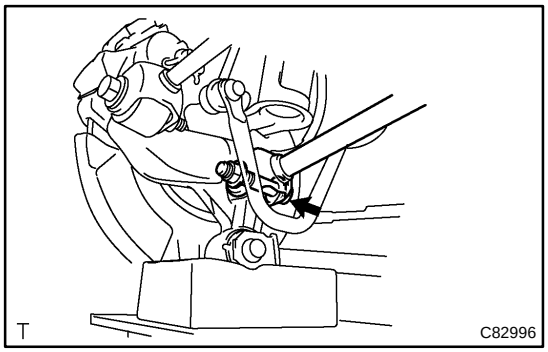

19. FULLY TIGHTEN REAR SUSPENSION ARM ASSY NO.1 LH

(a) Fully tighten the bolt.
Torque: 100 N·m (1,020 kgf·cm, 74 ft·lbf)

HINT:
Keep the nut fixed while tightening the bolt.

20. FULLY TIGHTEN REAR SUSPENSION ARM ASSY NO.1 RH

HINT:
Fully tighten the RH side by the procedures with the LH side.

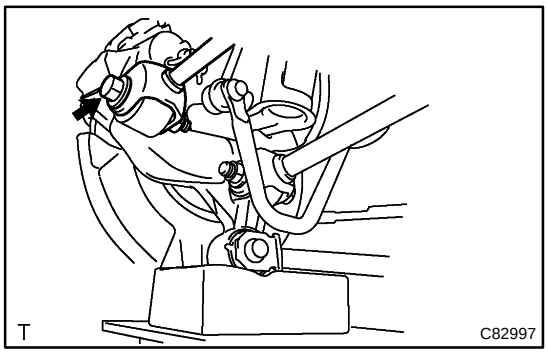

21. FULLY TIGHTEN REAR SUSPENSION ARM ASSY NO.2 LH

(a) Fully tighten the bolt.
Torque: 100 N·m (1,020 kgf·cm, 74 ft·lbf)

HINT:
Keep the nut fixed while tightening the bolt.

22. FULLY TIGHTEN REAR SUSPENSION ARM ASSY NO.2 RH

HINT:
Fully tighten the RH side by the procedures with the LH side.

23. FULLY TIGHTEN STRUT ROD ASSY REAR
(See page 27–19)

24. INSTALL STABILIZER BAR REAR
(See page 27–17)

25. INSTALL EXHAUST PIPE ASSY CENTER

(a) 1MZ–FE engine: See page 15–5
(b) 2AZ–FE engine: See page 15–2

26. INSTALL REAR WHEEL
Torque: 103 N·m (1,050 kgf·cm, 76 ft·lbf)

27. INSPECT REAR WHEEL ALIGNMENT(See page 27–3)

REAR SUSPENSION ARM ASSY NO.2 LH

27060–01

REPLACEMENT

HINT:
COMPONENTS: See page 27–2

1. REMOVE REAR WHEEL

2. REMOVE EXHAUST PIPE ASSY CENTER

(a) 1MZ–FE engine: See page 15–5
(b) 2AZ–FE engine: See page 15–2

3. REMOVE STABILIZER BAR REAR
(See page 27–17)

4. SEPARATE REAR SUSPENSION ARM ASSY NO.1 LH
(See page 27–10)

5. SEPARATE REAR SUSPENSION ARM ASSY NO.1 RH

HINT:
Separate the RH side by the procedures with the LH side.

6. SEPARATE REAR SUSPENSION ARM ASSY NO.2 LH
(See page 27–14)

7. SEPARATE REAR SUSPENSION ARM ASSY NO.2 RH

HINT:
Separate the RH side by the procedures with the LH side.

8. SEPARATE STRUT ROD ASSY REAR
(See page 27–19)

9. REMOVE REAR SUSPENSION MEMBER SUB–ASSY
(See page 27–10)

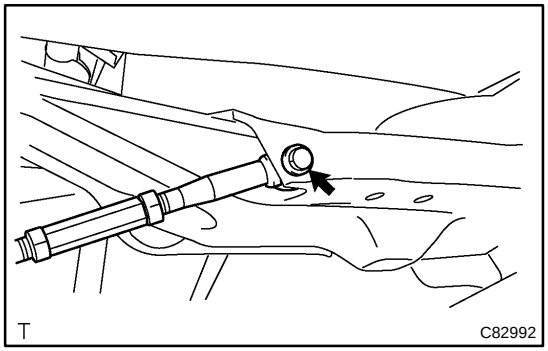

10. REMOVE REAR SUSPENSION ARM ASSY NO.2 LH

(a) Remove the bolt and disconnect the rear suspension arm No. 2 (inner side).

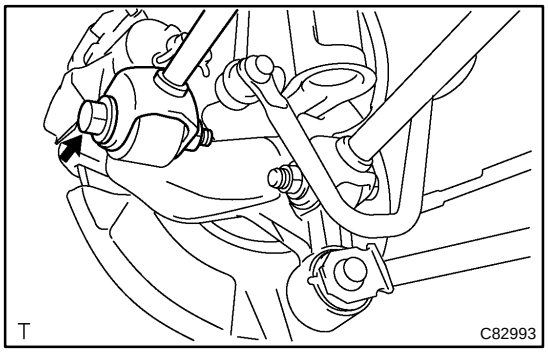

(b) Remove the bolt, nut and the rear suspension arm No. 2 (outer side) from rear axle carrier.

HINT:
Keep the nut fixed while loosening and removing the bolt.

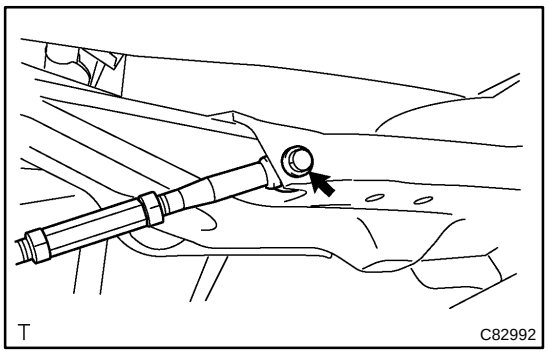

11. INSTALL REAR SUSPENSION ARM ASSY NO.2 LH

(a) Install the rear suspension arm No. 2 (inner side) with the bolt and temporarily tighten the bolt.

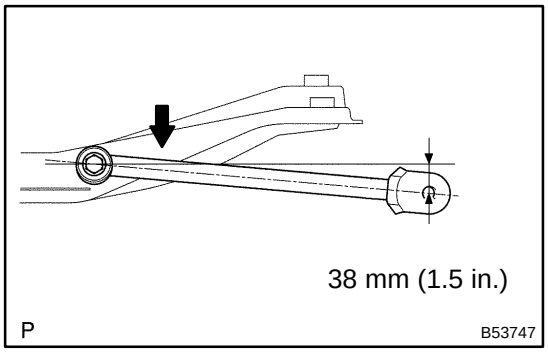

(b) Set the suspension arm in the position in the illustration and fully tighten the bolt.
Torque: 100 N·m (1,020 kgf·cm, 74 ft·lbf)

12. INSTALL REAR SUSPENSION MEMBER SUB–ASSY
(See page 27–10)
13. TEMPORARY TIGHTEN REAR SUSPENSION ARM ASSY NO.1 LH
(See page 27–10)
14. TEMPORARY TIGHTEN REAR SUSPENSION ARM ASSY NO.1 RH

HINT:
Temporarily tighten the RH side by the procedures with the LH side.

15. TEMPORARY TIGHTEN REAR SUSPENSION ARM ASSY NO.2 LH
(See page 27–14)
16. TEMPORARY TIGHTEN REAR SUSPENSION ARM ASSY NO.2 RH

HINT:
Temporarily tighten the RH side by the procedures with the LH side.

17. TEMPORARY TIGHTEN STRUT ROD ASSY REAR
(See page 27–19)
18. INSTALL STABILIZER BAR REAR
(See page 27–17)
19. STABILIZE SUSPENSION(See page 27–10)
20. FULLY TIGHTEN REAR SUSPENSION ARM ASSY NO.1 LH
(See page 27–10)
21. FULLY TIGHTEN REAR SUSPENSION ARM ASSY NO.1 RH

HINT:
Fully tighten the RH side by the procedures with the LH side.

22. FULLY TIGHTEN REAR SUSPENSION ARM ASSY NO.2 LH
(See page 27–14)

23. FULLY TIGHTEN REAR SUSPENSION ARM ASSY NO.2 RH

HINT:
Fully tighten the RH side by the procedures with the LH side.

24. FULLY TIGHTEN STRUT ROD ASSY REAR
(See page 27–19)

25. INSTALL EXHAUST PIPE ASSY CENTER

(a) 1MZ–FE engine: See page 15–5
(b) 2AZ–FE engine: See page 15–2

26. INSTALL REAR WHEEL
Torque: 103 N·m (1,050 kgf·cm, 76 ft·lbf)

27. INSPECT REAR WHEEL ALIGNMENT(See page 27–3)

STABILIZER BAR REAR

REPLACEMENT

27061–01

HINT:

COMPONENTS: See page 27–2

1. REMOVE REAR WHEEL

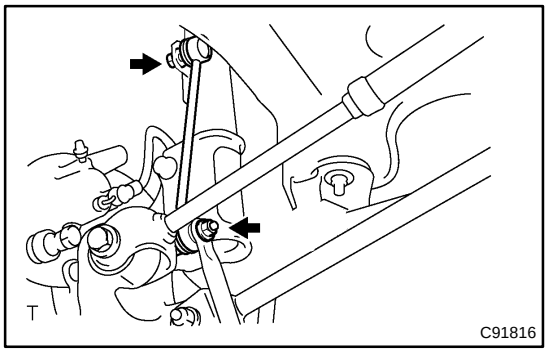

2. REMOVE REAR STABILIZER LINK ASSY LH

(a) Remove the 2 nuts and stabilizer bar link.

HINT:

If the ball joint turns together with the nut, use a hexagon wrench (5 mm) to hold the stud.

3. REMOVE REAR STABILIZER LINK ASSY RH

HINT:

Remove the RH side by the same procedures with the LH side.

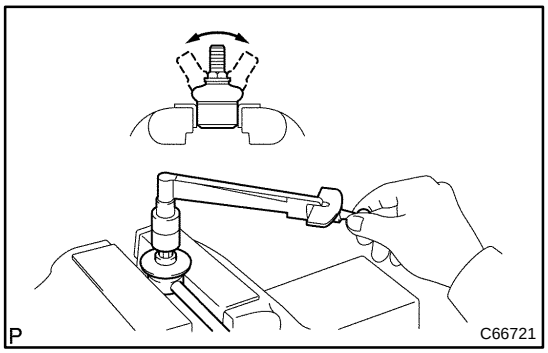

4. INSPECT REAR STABILIZER LINK ASSY LH

(a) As shown in the illustration, flip the ball joint stud back and forth 5 times, before installing the nut.

(b) Using a torque wrench, turn the nut continuously at a rate of 2 – 4 seconds per 1 turn and take the torque reading on the 5th turn.

Turning torque:

0.05 – 1.0 N·m (0.5 – 10 kgf·cm, 0.4 – 8.7 in.·lbf)

5. REMOVE STABILIZER BAR REAR

(a) Remove the 8 bolts, 2 No. 1 brackets and 2 bushings.

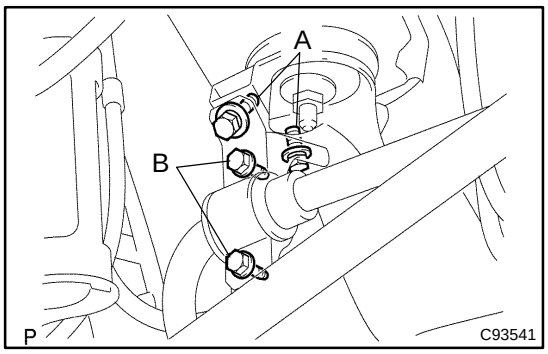

6. INSTALL STABILIZER BAR REAR

(a) Install the bushing and bracket with the 4 bolts (LH side).
Torque: 19 N·m (195 kgf·cm, 14 ft·lbf)

HINT:

- 2 types of bolts (A, B) are used, so make sure the correct bolts are installed.

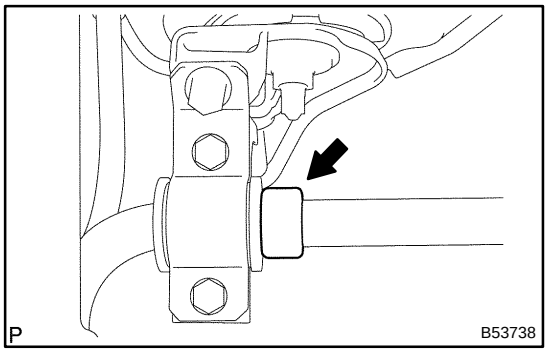

- Install the bushing to the inner side of the bushing stopper on the stabilizer bar.

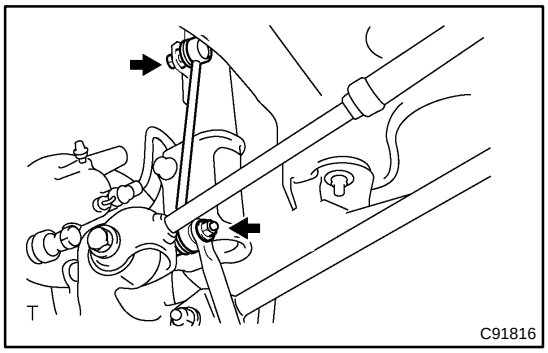

7. INSTALL REAR STABILIZER LINK ASSY LH

(a) Remove the 2 nuts and stabilizer bar link.
Torque: 39 N·m (400 kgf·cm, 29 ft·lbf)

HINT:

If the ball joint turns together with the nut, use a hexagon (5 mm) wrench to hold the stud.

8. INSTALL REAR STABILIZER LINK ASSY RH

HINT:

Install the RH side by the same procedures with the LH side.

9. INSTALL REAR WHEEL

Torque: 103 N·m (1,050 kgf·cm, 76 ft·lbf)

STRUT ROD ASSY REAR

REPLACEMENT

2704T–02

HINT:

COMPONENTS: See page 27–2

1. REMOVE REAR WHEEL

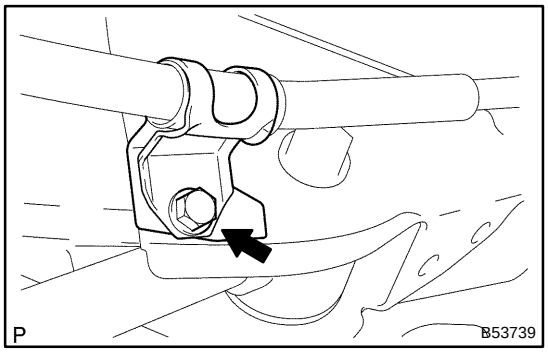

2. REMOVE STRUT ROD ASSY REAR

(a) Remove the bolt, nut and disconnect the parking brake cable.

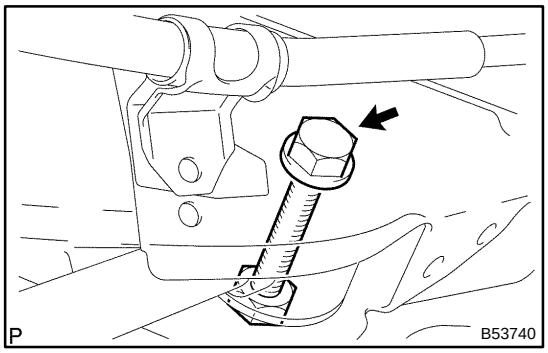

(b) Remove the bolt, nut and disconnect the strut rod (front side).

HINT:

Keep the nut fixed while loosening and removing the bolt.

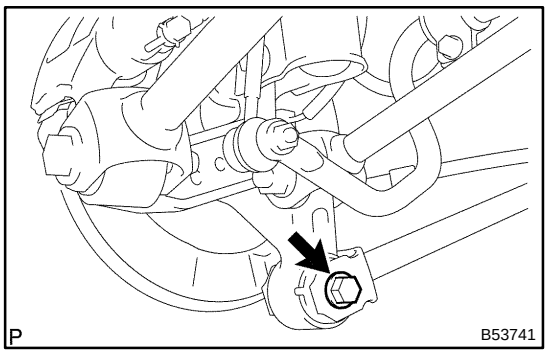

(c) Remove the bolt, nut and strut rod from rear axle carrier.

HINT:

Keep the nut fixed while loosening and removing the bolt.

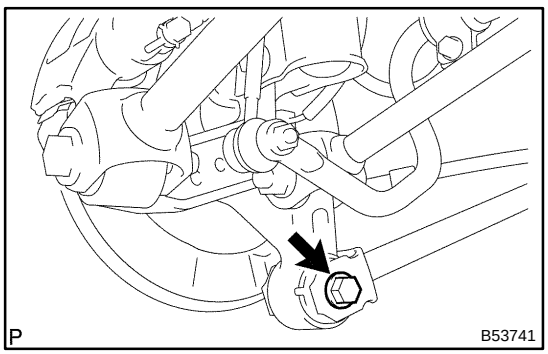

3. TEMPORARY TIGHTEN STRUT ROD ASSY REAR

(a) Install the strut rod (rear side), bolt nut and temporarily tighten the bolt.

HINT:

- Insert the bolt from the inner side of the vehicle and temporarily install the bolt.
- Keep the nut fixed while tightening the bolt.

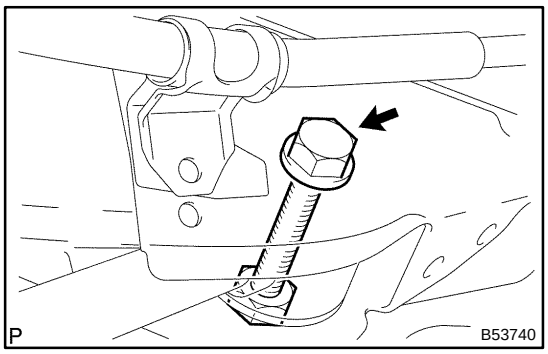

(b) Connect the strut rod (inner side) with the bolt.
Torque: 113 N·m (1,150 kgf·cm, 83 ft·lbf)

HINT:
Keep the nut fixed while tightening the bolt.

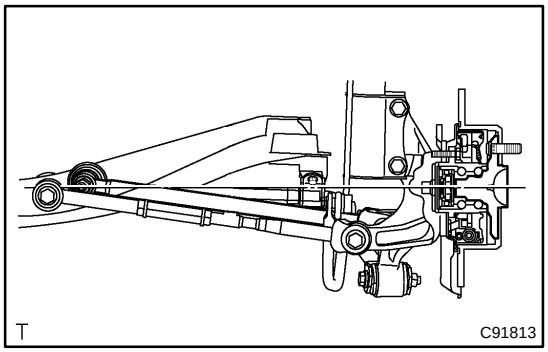

4. STABILIZE SUSPENSION

(a) Jack up the rear axle carrier, placing a wood block between them. Apply load to the suspension so that the installed bolt of the suspension arm assy No. 1 (vehicle side) is horizontally aligned with the center of the rear axle hub.

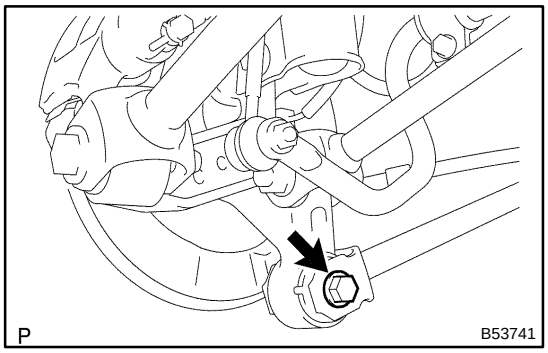

5. FULLY TIGHTEN STRUT ROD ASSY REAR

(a) Fully tighten the bolt.
Torque: 113 N·m (1,152 kgf·cm, 83 ft·lbf)

HINT:
Keep the nut fixed while tightening the bolt.

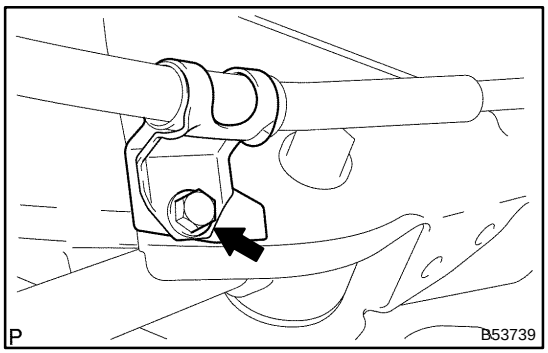

(b) Install the parking brake cable with the bolt and nut.
Torque: 5.4 N·m (55 kgf·cm, 48 in.·lbf)

6. INSTALL REAR WHEEL
Torque: 103 N·m (1,050 kgf·cm, 76 ft·lbf)

7. INSPECT REAR WHEEL ALIGNMENT(See page 27–3)

WHEEL AND TIRE SYSTEM

INSPECTION

28009–02

1. INSPECT TIRE

(a) Check the tires for wear and proper inflation pressure.

Cold tire inflation pressure:

Tire size	Front, Rear kPa (kgf/cm^2, psi)
P205/65R15 92T P205/65R15 92H 205/65R15 94V P215/60R16 94V	200 (2.0, 29)

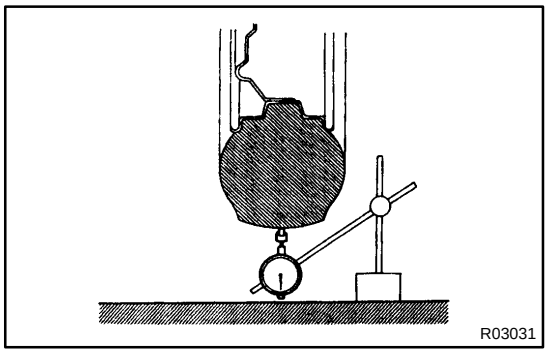

(b) Using a dial indicator, check the tire runout.

Tire runout: 1.0 mm (0.039 in.) or less

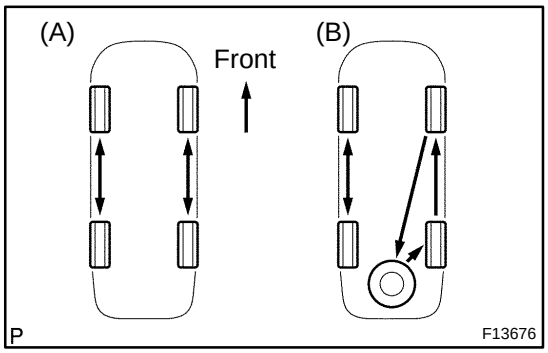

2. ROTATE TIRE

HINT:

- Rotate tires as shown in the illustration.
- Rotate as shown in (B) if the spare tire is included in the rotation.

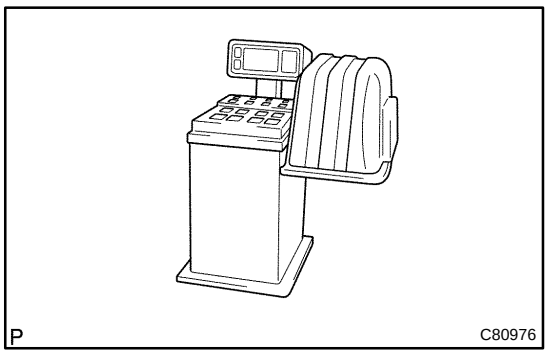

3. INSPECT WHEEL BALANCE

(a) Check and adjust the Off–the–car balance.

(b) If necessary, check and adjust the On–the–car balance.

Imbalance after adjustment: 8.0 g (0.018 lb) or less

4. INSPECT BEARING BACKLASH(See page 30–2)

5. INSPECT BEARING BACKLASH(See page 30–2)

6. INSPECT AXLE HUB DEVIATION(See page 30–2)

7. INSPECT AXLE HUB DEVIATION(See page 30–2)

Author : Date : 1954

DRIVE SHAFT, PROPELLER SHAFT, AXLE

3001U–02

PROBLEM SYMPTOMS TABLE

Use the table below to help you find the cause of the problem. The numbers indicate the priority of the likely cause of the problem. Check each part in order. If necessary, replace these parts.

Symptom	Suspect Area	See page
Wander	5. Wheel alignment	26–5 27–3
	6. Steering linkage (Loosen or worn)	–
	7. Hub bearing (Worn)	30–2
	8. Stabilizer bar	26–19 27–17
Front wheel shimmy	1. Wheel balance	28–1
	2. Shock absorber	26–9 27–4
	3. Ball joint (Worn)	26–17
	4. Hub bearing (Worn)	30–2
Noise	1. Inbord joint (Worn)	30–8
	2. Outbord joint (Worn)	30–8

Author : Date : 1955

3001V–02

ON–VEHICLE INSPECTION

1. REMOVE FRONT WHEEL
2. DISCONNECT FRONT DISC BRAKE CALIPER ASSY LH(See page 30–21)
3. REMOVE FRONT DISC

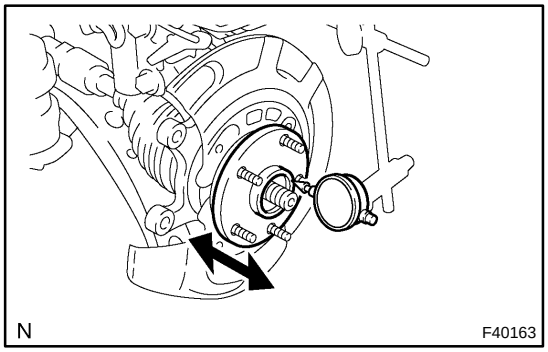

4. INSPECT FRONT AXLE HUB BEARING BACKLASH

(a) Using a dial indicator, check the backlash near the center of the axle hub.

Maximum: 0.05 mm (0.0020 in.)

If the backlash exceeds the maximum, replace the bearing.

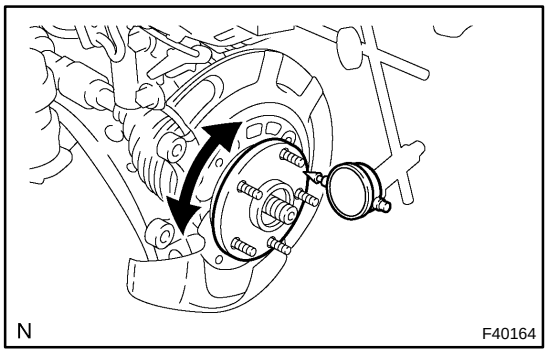

5. INSPECT FRONT AXLE HUB DEVIATION

(a) Using a dial indicator, check the deviation at the surface of the axle hub outside the hub bolt.

Maximum: 0.05 mm (0.0020 in.)

If the backlash exceeds the maximum, replace the axle hub.

6. INSTALL FRONT DISC
7. INSTALL FRONT DISC BRAKE CALIPER ASSY LH(See page 30–21)
8. INSTALL FRONT WHEEL

   Torque: 103 N·m (1,050 kgf·cm, 76 ft·lbf)
9. REMOVE REAR WHEEL
10. DISCONNECT REAR DISC BRAKE CALIPER ASSY LH(DISC REAR BRAKE TYPE) (See page 30–28)
11. REMOVE REAR DISC(DISC REAR BRAKE TYPE)
12. REMOVE REAR BRAKE DRUM SUB–ASSY(DRUM REAR BRAKE TYPE)

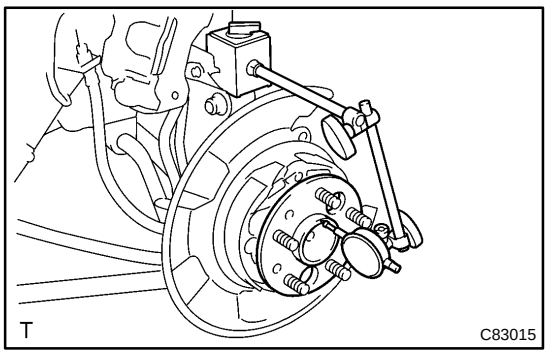

13. INSPECT REAR AXLE HUB BEARING BACKLASH

(a) Set a dial indicator near the center of the axle hub and check the backlash in the bearing shaft direction.

Maximum: 0.05 mm (0.0020 in.)

If the backlash exceeds the maximum, replace the axle hub assembly.

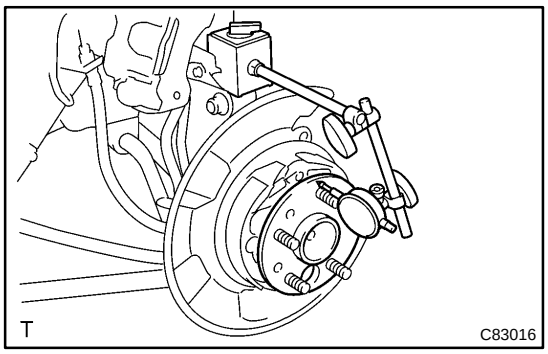

14. INSPECT REAR AXLE HUB DEVIATION

(a) Using a dial indicator, check the deviation at the surface of the axle hub outside the hub bolt.
Maximum: 0.07 mm (0.0027 in.)

If the backlash exceeds the maximum, replace the axle hub assembly.

15. INSTALL REAR DISC(DISC REAR BRAKE TYPE)

16. INSTALL REAR DISC BRAKE CALIPER ASSY LH(DISC REAR BRAKE TYPE)
(See page 30–28)

17. INSTALL REAR BRAKE DRUM SUB–ASSY(DRUM REAR BRAKE TYPE)

18. INSTALL REAR WHEEL
Torque: 103 N·m (1,050 kgf·cm, 76 ft·lbf)

300AW–01

COMPONENTS

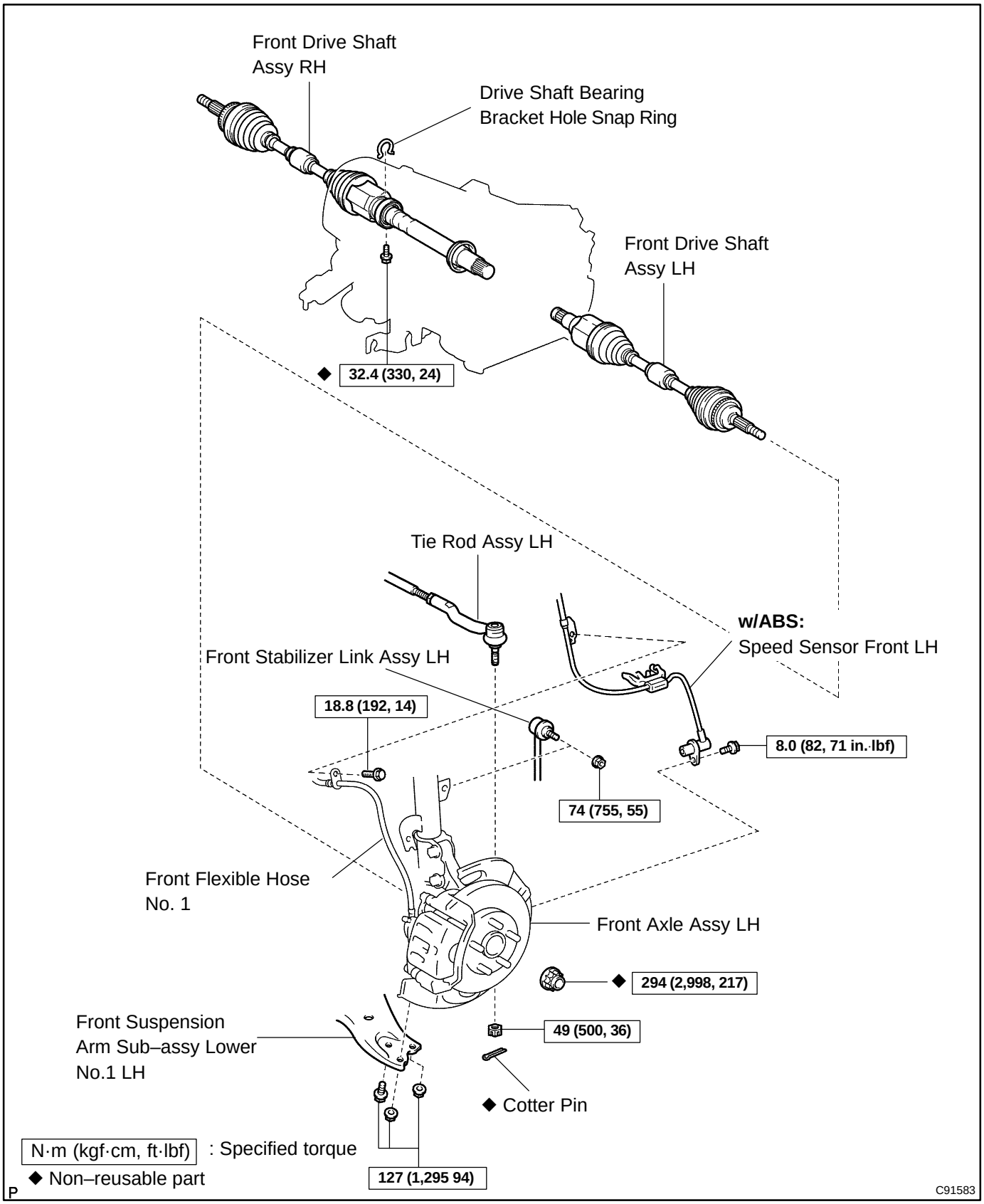

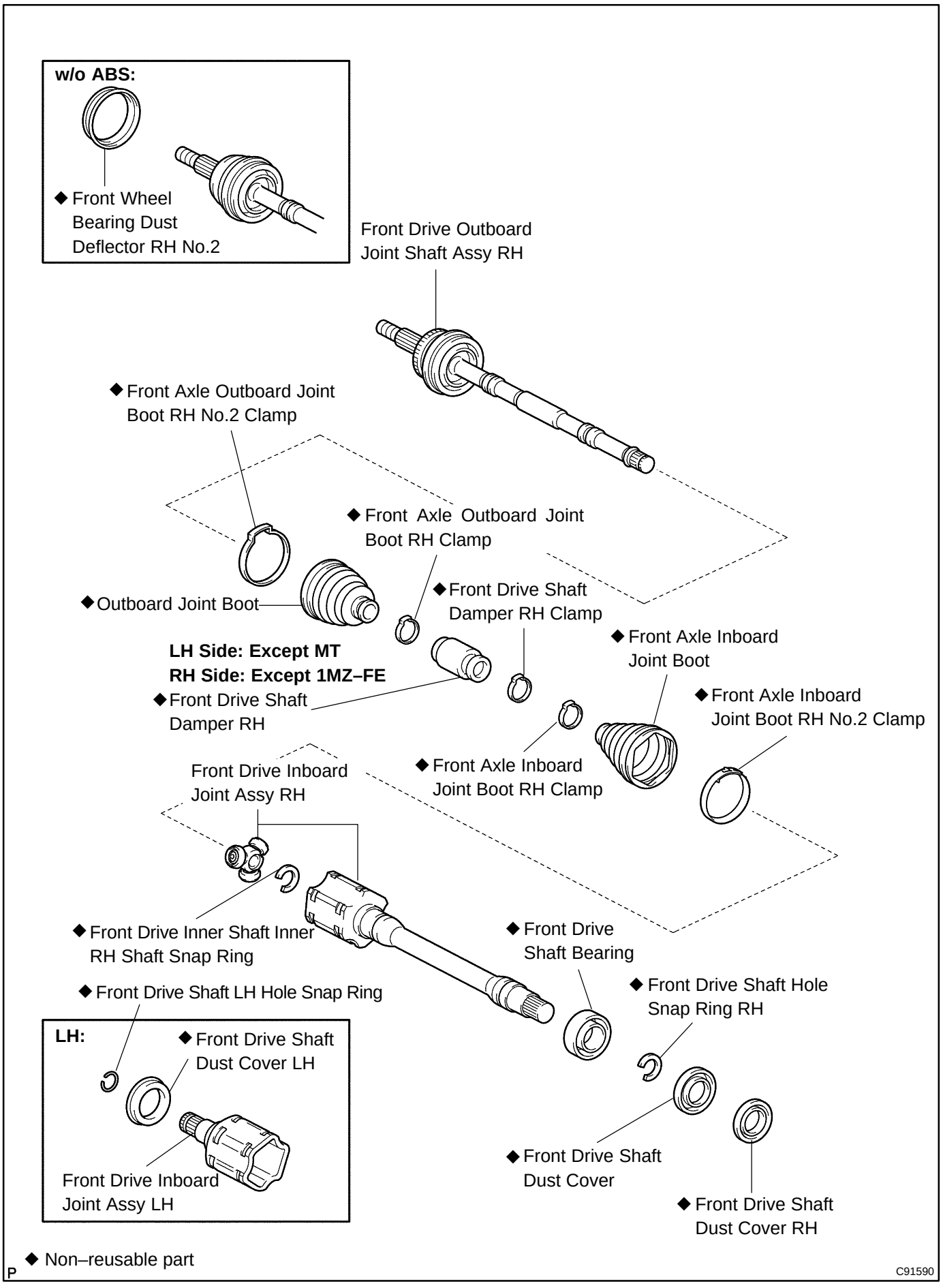
w/o ABS:
◆ Front Wheel Bearing Dust Deflector RH No.2
Front Drive Outboard Joint Shaft Assy RH
◆ Front Axle Outboard Joint Boot RH No.2 Clamp
◆ Front Axle Outboard Joint Boot RH Clamp
◆ Outboard Joint Boot
◆ Front Drive Shaft Damper RH Clamp
LH Side: Except MT
RH Side: Except 1MZ–FE
◆ Front Drive Shaft Damper RH
◆ Front Axle Inboard Joint Boot
◆ Front Axle Inboard Joint Boot RH No.2 Clamp
◆ Front Axle Inboard Joint Boot RH Clamp
Front Drive Inboard Joint Assy RH
◆ Front Drive Inner Shaft Inner RH Shaft Snap Ring
◆ Front Drive Shaft Bearing
◆ Front Drive Shaft LH Hole Snap Ring
◆ Front Drive Shaft Hole Snap Ring RH
LH:
◆ Front Drive Shaft Dust Cover LH
Front Drive Inboard Joint Assy LH
◆ Front Drive Shaft Dust Cover
◆ Front Drive Shaft Dust Cover RH
◆ Non–reusable part
C91590

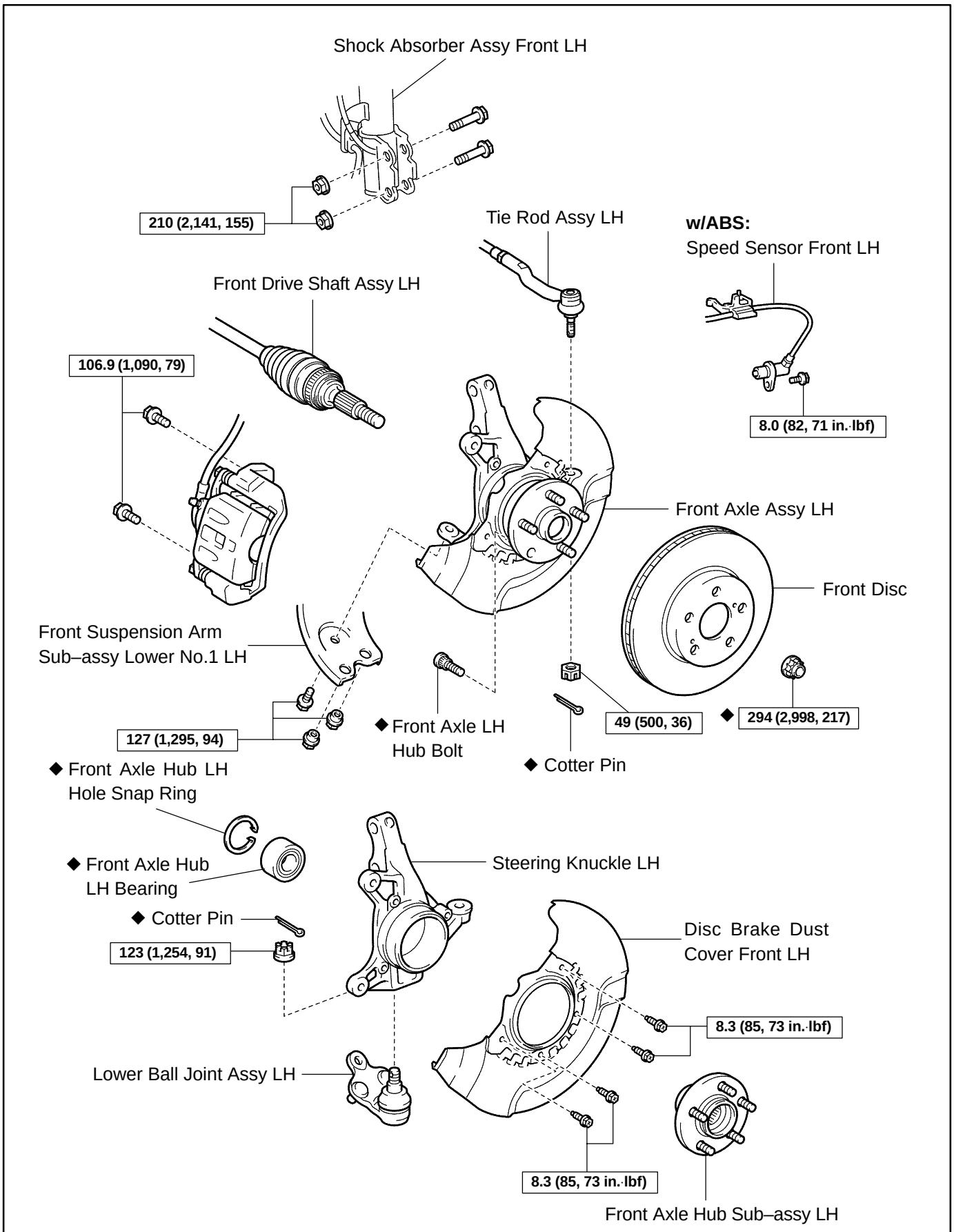
Shock Absorber Assy Front LH
210 (2,141, 155)
Tie Rod Assy LH
w/ABS:
Speed Sensor Front LH
Front Drive Shaft Assy LH
106.9 (1,090, 79)
8.0 (82, 71 in.·lbf)
Front Axle Assy LH
Front Disc
Front Suspension Arm
Sub–assy Lower No.1 LH
127 (1,295, 94)
◆ Front Axle LH
Hub Bolt
49 (500, 36)
◆ 294 (2,998, 217)
◆ Cotter Pin
◆ Front Axle Hub LH
Hole Snap Ring
◆ Front Axle Hub
LH Bearing
Steering Knuckle LH
◆ Cotter Pin
123 (1,254, 91)
Disc Brake Dust
Cover Front LH
8.3 (85, 73 in.·lbf)
Lower Ball Joint Assy LH
8.3 (85, 73 in.·lbf)
Front Axle Hub Sub–assy LH
N·m (kgf·cm, ft·lbf): Specified torque
◆ Non–reusable part
P
C91584

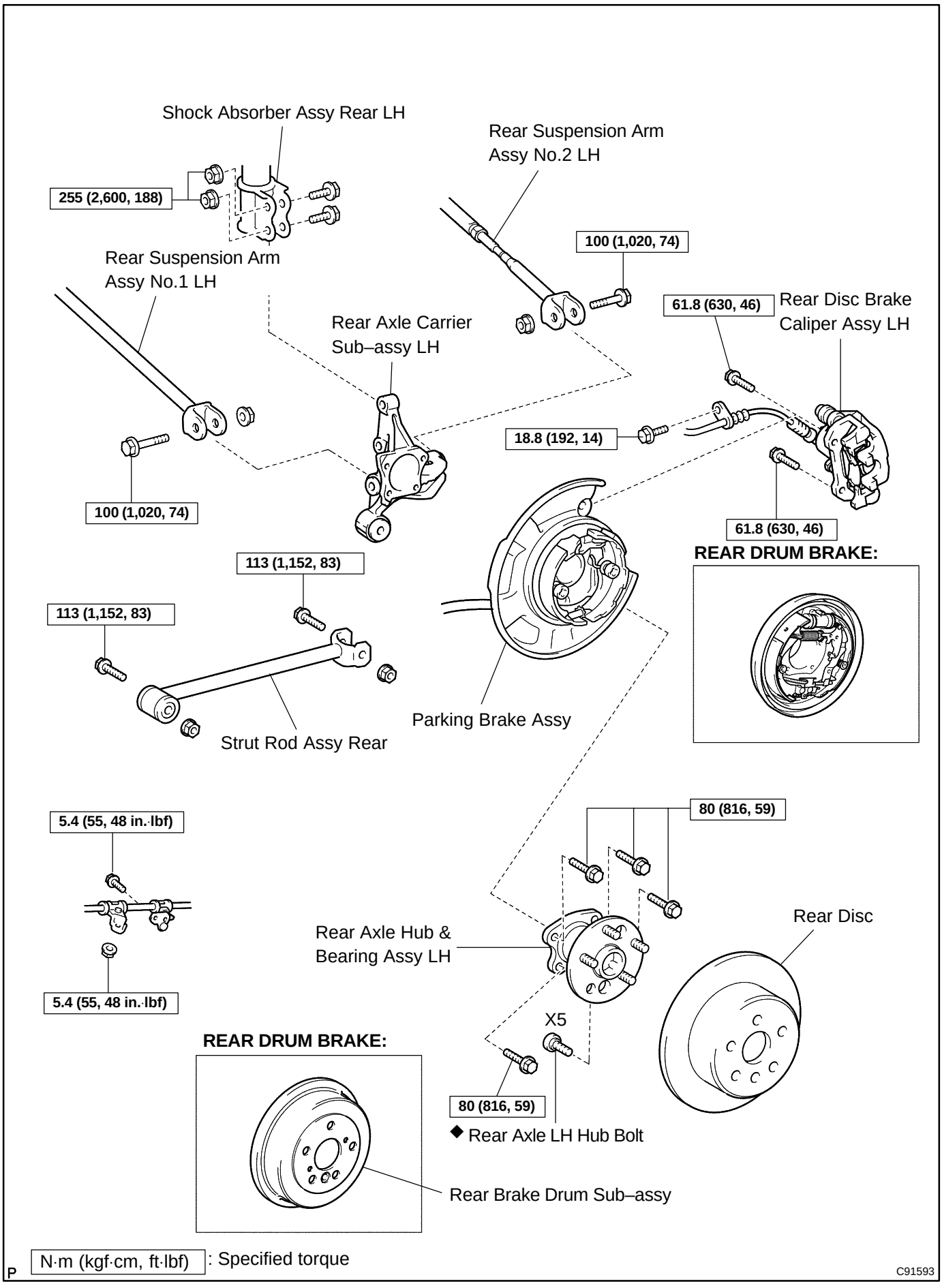
Shock Absorber Assy Rear LH
255 (2,600, 188)
Rear Suspension Arm
Assy No.2 LH
100 (1,020, 74)
Rear Suspension Arm
Assy No.1 LH
Rear Axle Carrier
Sub–assy LH
61.8 (630, 46)
Rear Disc Brake
Caliper Assy LH
18.8 (192, 14)
100 (1,020, 74)
61.8 (630, 46)
REAR DRUM BRAKE:
113 (1,152, 83)
113 (1,152, 83)
Parking Brake Assy
Strut Rod Assy Rear
5.4 (55, 48 in.·lbf)
80 (816, 59)
Rear Axle Hub &
Bearing Assy LH
Rear Disc
5.4 (55, 48 in.·lbf)
X5
REAR DRUM BRAKE:
80 (816, 59)
◆ Rear Axle LH Hub Bolt
Rear Brake Drum Sub–assy
N·m (kgf·cm, ft·lbf) : Specified torque
P
C91593

FRONT DRIVE SHAFT

3006G–01

OVERHAUL

NOTICE:

Do not disassemble the outboard joint.

HINT:

- COMPONENTS: See page 30–4
- Overhaul the RH side by the same procedures with LH side.

1. DRAIN AUTOMATIC TRANSAXLE FLUID(A/T TRANSAXLE)

2. DRAIN MANUAL TRANSAXLE OIL(M/T TRANSAXLE)

3. REMOVE FRONT WHEEL

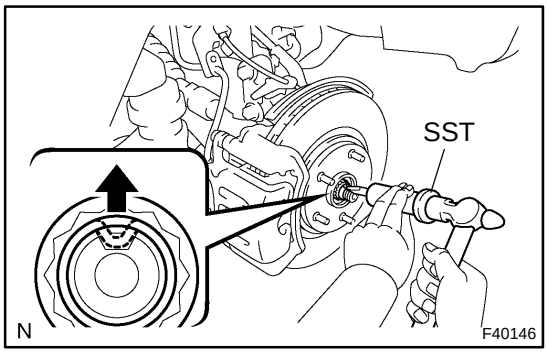

4. REMOVE FRONT AXLE HUB LH NUT

(a) Using SST and a hammer, unstake the staked part of the front axle hub LH nut.
SST 09930–00010

NOTICE:

Loosen the staked part of the lock nut completely, otherwise the screw of the drive shaft may be damaged.

(b) While applying the brakes, remove the front axle hub LH nut.

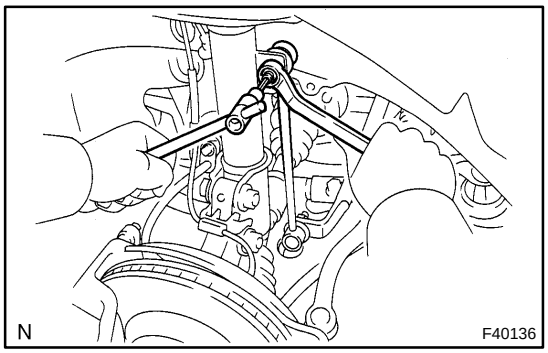

5. DISCONNECT FRONT STABILIZER LINK ASSY LH

(a) Remove the nut, disconnect the front stabilizer link assy LH from the shock absorber assy front LH.

HINT:

If the ball joint turns together with the nut, use a hexagon wrench (6 mm) to hold the stud.

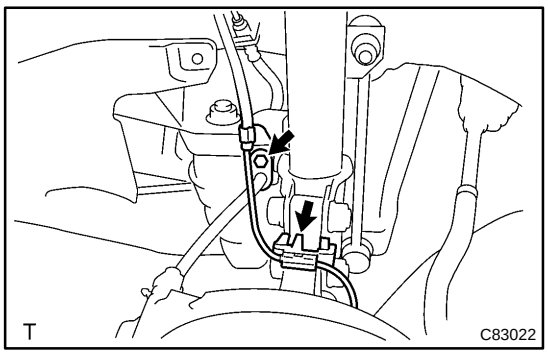

6. DISCONNECT SPEED SENSOR FRONT LH(W/ ABS)

(a) Remove the sensor wire clamp.

(b) Remove the bolt, disconnect the sensor wire and front flexible hose No.1 from the shock absorber assy front LH.

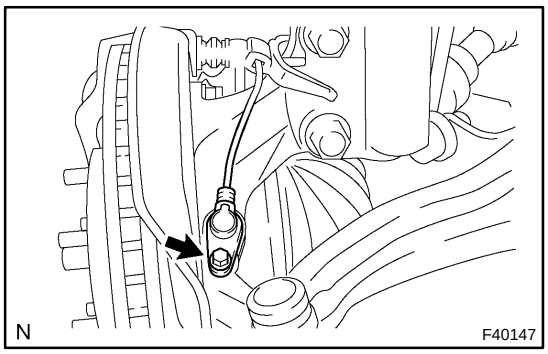

(c) Remove the bolt, disconnect the speed sensor front LH from the steering knuckle LH.

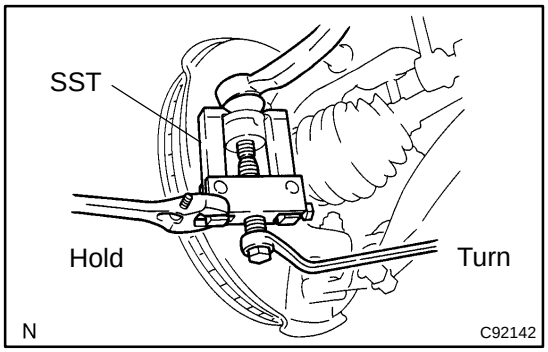

7. DISCONNECT TIE ROD ASSY LH

(a) Remove the cotter pin and nut.
(b) Using SST, disconnect the tie rod assy LH from the steering knuckle LH.
SST 09628–62011

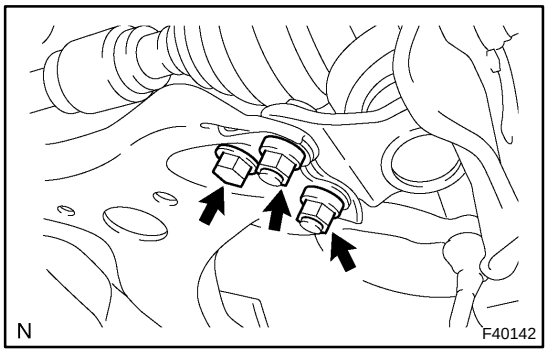

8. DISCONNECT FRONT SUSPENSION ARM SUB–ASSY LOWER NO.1 LH

(a) Remove the bolt and 2 nuts, and disconnect the front suspension arm sub–assy lower No.1 LH from the lower ball joint assy front LH.

9. DISCONNECT FRONT AXLE ASSY LH

(a) Using a plastic hammer, disconnect the front drive shaft assy LH from the front axle hub sub–assy LH.

NOTICE:

w/ ABS:

Be careful not to damage the boot and speed sensor rotor.

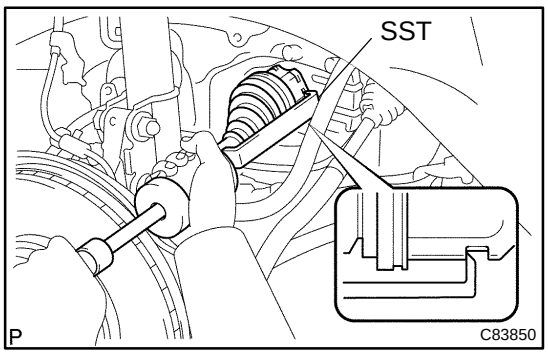

10. REMOVE FRONT DRIVE SHAFT ASSY LH

(a) Using SST, remove the front drive shaft assy LH.
SST 09520–01010, 09520–24010 (09520–32040)

NOTICE:

Be careful not to damage the oil seal.

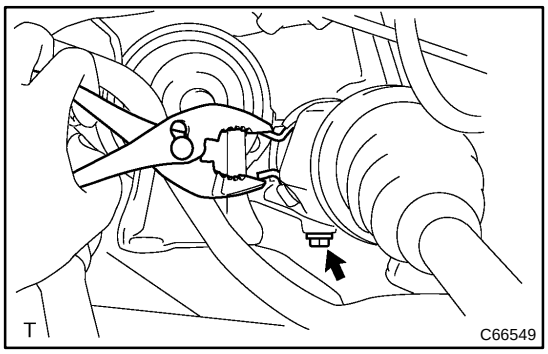

11. REMOVE FRONT DRIVE SHAFT ASSY RH

(a) Using a pliers, remove the drive shaft bearing bracket hole snap ring.
(b) Remove the bolt and front drive shaft assy RH from the drive shaft bearing bracket.

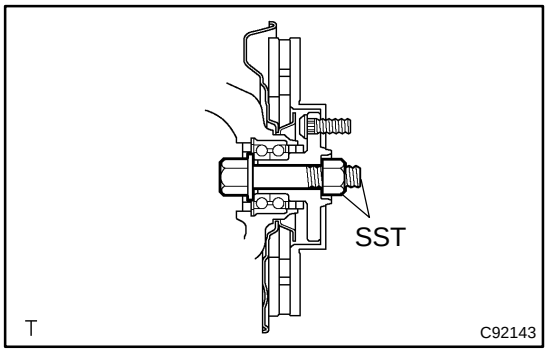

12. FIX FRONT AXLE ASSY LH

NOTICE:

The hub bearing could be damaged if it is subjected to the vehicle weight, such as when moving the vehicle with the drive shaft removed.

Therefore, if it is absolutely necessary to place the vehicle weight on the hub bearing, first support it with SST.

SST 09608–16042 (09608–02021, 09608–02041)

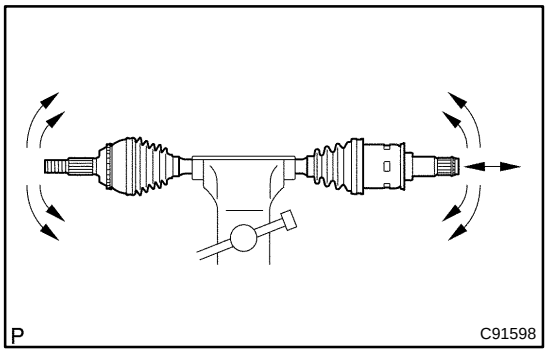

13. INSPECT FRONT DRIVE SHAFT ASSY LH

(a) Check to see that there is no remarkable play in the outboard joint.
(b) Check to see that the inboard joint slides smoothly in the thrust direction.
(c) Check to see that there is no remarkable play in the radial direction of the inboard joint.
(d) Check the boots for damage.

NOTICE:

Move the drive shaft assy keeping it level.

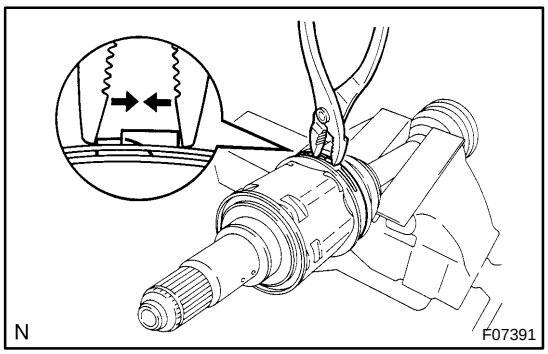

14. REMOVE FRONT AXLE INBOARD JOINT BOOT CLAMP

(a) Using pliers, pinch the claws to compress the front axle inboard joint boot LH No.2 clamp and remove it.
(b) Using a side cutter, cut the front axle inboard joint boot LH clamp and remove it.

15. DISCONNECT FR AXLE INBOARD JOINT BOOT

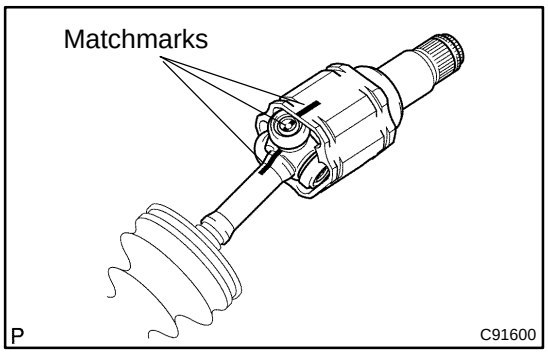

16. REMOVE FRONT DRIVE INBOARD JOINT ASSY LH

(a) Place matchmarks on the tripod, inboard and outboard joint shafts.

NOTICE:

Do not punch the marks.

(b) Remove the front drive inboard joint assy LH from the front drive outboard joint shaft assy LH.

(c) Using a snap ring expander, remove the front drive inner shaft inner RH shaft snap ring.

(d) Place matchmarks on the front drive outboard joint shaft assy LH and tripod.

NOTICE:

Do not punch the marks.

(e) Using a brass bar and hammer, remove the tripod from the front drive shaft assy LH.

NOTICE:

Do not tap the roller.

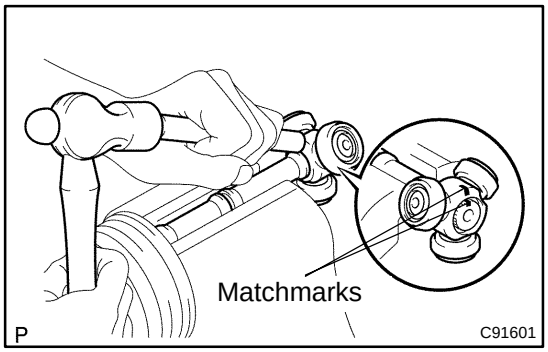

17. REMOVE FRONT DRIVE SHAFT DAMPER LH(M/T TRANSAXLE)

(a) Using a side cutter, cut the front drive shaft damper LH clamp and remove it.

(b) Remove the front drive shaft damper LH.

18. REMOVE FRONT DRIVE SHAFT DAMPER RH(EXCEPT 1MZ–FE ENGINE TYPE)

(a) Using a side cutter, cut the front drive shaft damper RH clamp and remove it.

(b) Remove the front drive shaft damper RH.

19. REMOVE FRONT AXLE OUTBOARD JOINT BOOT CLAMP

(a) Using a side cutter, cut the front axle outboard joint boot LH clamp and front axle outboard joint boot LH No. 2 clamp and remove them.

HINT:

If the outboard joint boot clamps that have been replaced are installed to the drive shaft, use a side cutter or pliers to remove then.

20. REMOVE OUTBOARD JOINT BOOT

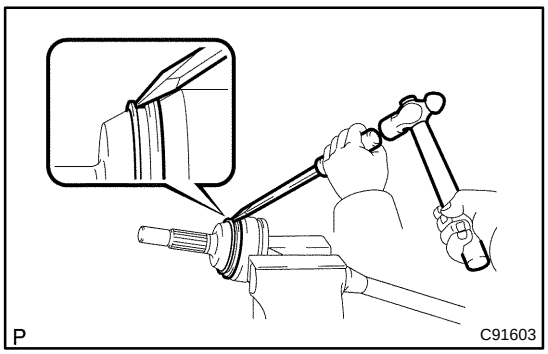

21. REMOVE FRONT WHEEL BEARING DUST DEFLECTOR LH NO.2(W/O ABS)

(a) Mount the front drive outboard joint shaft assy LH in a soft jaw vise.

(b) Using a screwdriver and a hammer, remove the front wheel bearing dust deflector LH No.2.

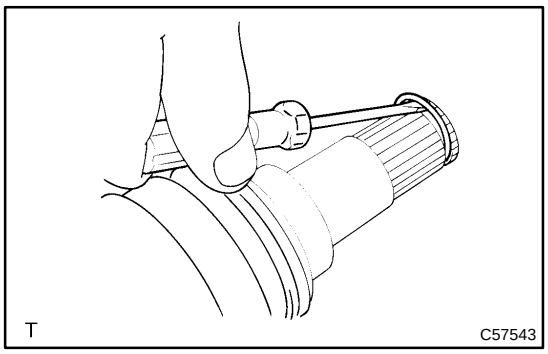

22. REMOVE FRONT DRIVE SHAFT LH HOLE SNAP RING

(a) Using a screwdriver, remove the front drive shaft LH hole snap ring.

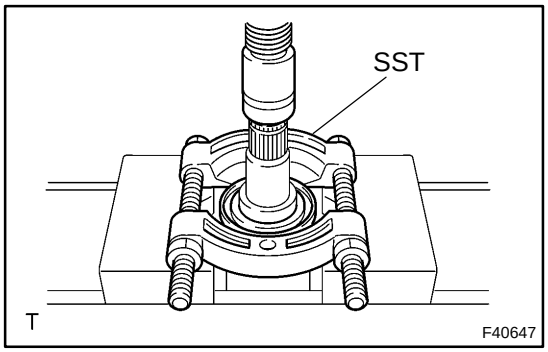

23. REMOVE FRONT DRIVE SHAFT DUST COVER LH

(a) Using SST and a press, remove the front drive shaft dust cover LH.
SST 09950–00020

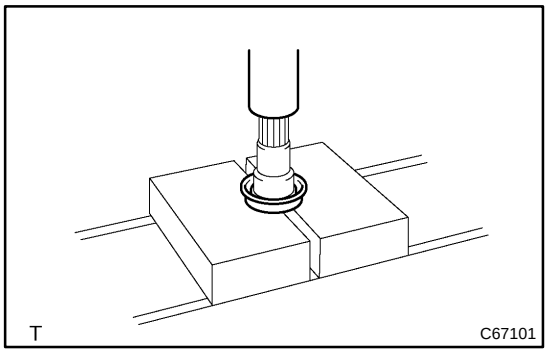

24. REMOVE FRONT DRIVE SHAFT DUST COVER RH

(a) Using a press, remove the front drive shaft dust cover RH.

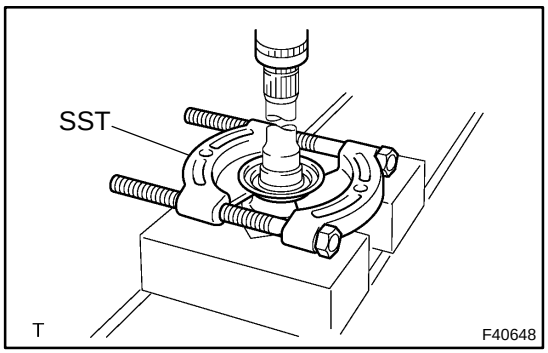

25. REMOVE FRONT DRIVE SHAFT DUST COVER

(a) Using SST and a press, remove the front drive shaft dust cover.
SST 09950–00020

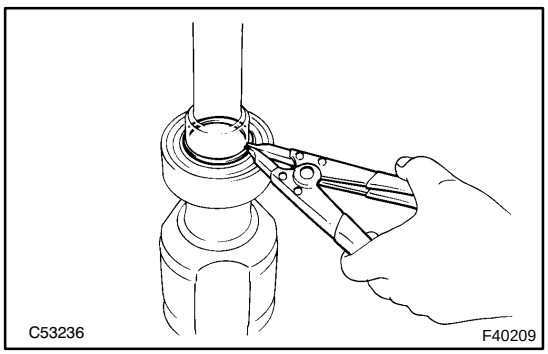

26. REMOVE FRONT DRIVE SHAFT BEARING

(a) Using a snap ring pliers, remove the front drive shaft hole snap ring RH.

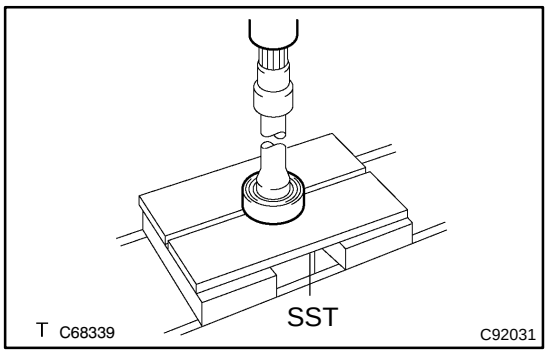

(b) Using SST and a press, remove the front drive shaft bearing.
SST 09527–10011

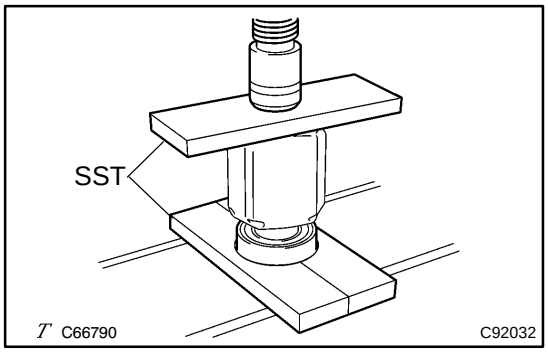

27. INSTALL FRONT DRIVE SHAFT BEARING

(a) Using SST and a press, install a new front drive shaft bearing.
SST 09527–30010, 09527–10011

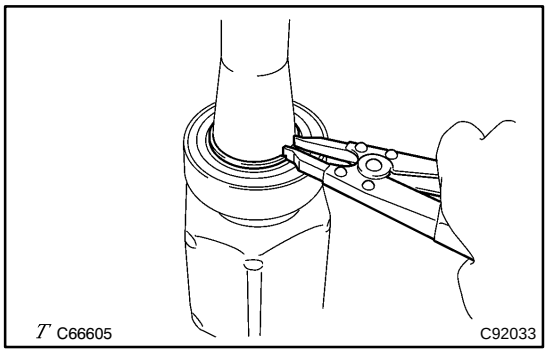

(b) Using a snap ring expander, install a new front drive shaft hole snap ring RH.

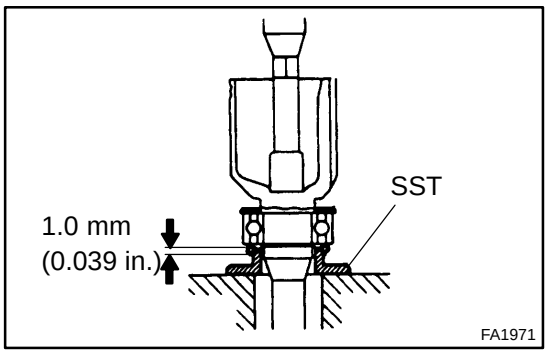

28. INSTALL FRONT DRIVE SHAFT DUST COVER

(a) Using SST, an extension bar and a press, install a new front drive shaft dust cover.
SST 09726–40010

HINT:
The clearance between the front drive shaft dust cover and the front drive shaft bearing should be kept in the range shown in the illustration.

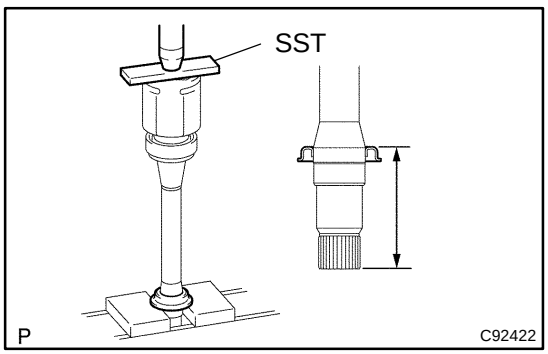

29. INSTALL FRONT DRIVE SHAFT DUST COVER RH

(a) Using SST and a press, install a new front drive shaft dust cover RH until the distance from the tip of center drive shaft to the front drive shaft dust cover RH reaches the specification, as shown in the illustration.
SST 09527–10011
Distance:
1MZ–FE: 110.5 ± 0.5 mm (4.3 ± 0.02 in.)
2AZ–FE: 91.5 ± 0.5 mm (3.6 ± 0.02 in.)

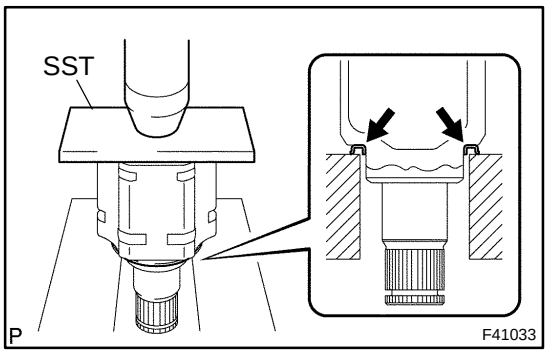

30. INSTALL FRONT DRIVE SHAFT DUST COVER LH

(a) Using SST and a press, install a new front drive shaft dust cover LH.
SST 09527–10011

31. INSTALL FRONT DRIVE SHAFT LH HOLE SNAP RING

(a) Install a new front drive shaft LH hole snap ring.

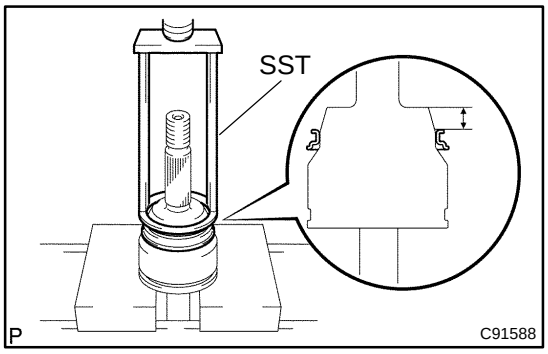

32. INSTALL FRONT WHEEL BEARING DUST DEFLECTOR LH NO.2(W/O ABS)

(a) Using SST and a press, install a new front wheel bearing dust deflector LH No.2 until the distance from the tip of front drive outboard joint shaft assy LH to the front wheel bearing dust deflector LH No.2 reaches the specification, as shown in the illustration.
SST 09387–00020
Distance: 13.5 – 13.8 mm (0.531 – 0.543 in.)

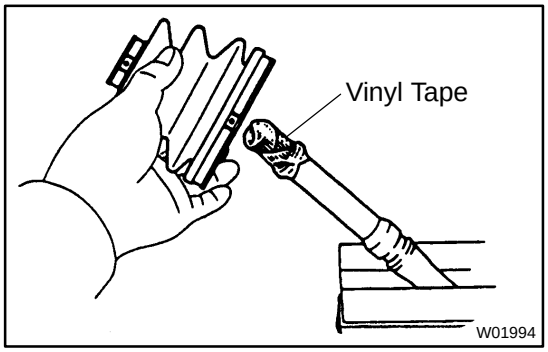

33. INSTALL OUTBOARD JOINT BOOT

HINT:
Before installing the boots, wrap the spline of the drive shaft with vinyl tape to prevent the boots from being damaged.

(a) Temporarily install a new outboard joint boot with 2 clamps to the drive shaft.
(b) Pack the inboard joint shaft and boot with grease in the boot kit.
Grease capacity:
1MZ–FE, 2AZ–FE(MT): 105 – 125 g (3.7 – 4.4 oz.)
2AZ–FE(AT): 100 – 120 g (3.5 – 4.2 oz.)

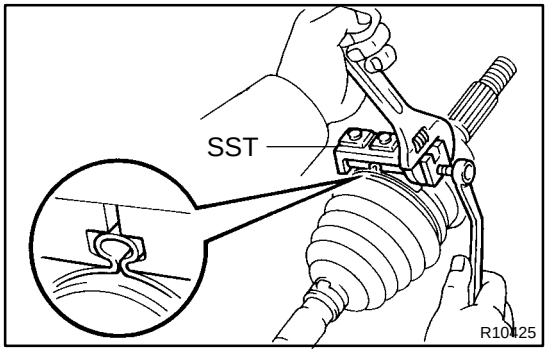

34. INSTALL FRONT AXLE OUTBOARD JOINT BOOT CLAMP

(a) Mount drive shaft in a soft vise.
(b) Secure the 2 outboard joint boot clamps onto the boot.
(c) Place SST onto the outboard joint large boot clamp.
SST 09521–24010
(d) Tighten the SST so that the large clamp is pinched.

NOTICE:
Do not overtighten the SST.

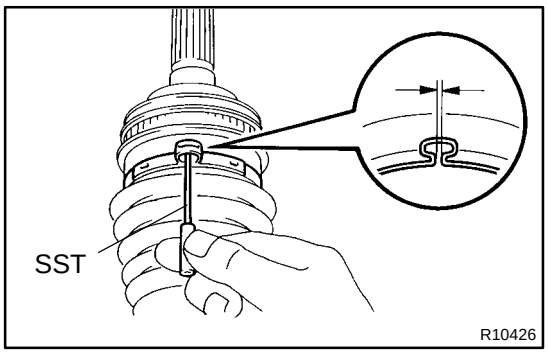

(e) Using SST, adjust the clearance of the large clamp.
SST 09240–00020
Crearance: 3.0 – 4.0 mm (0.118 – 0.157 in.)

(f) Employ the same manner to the outboard joint small boot clamp.
Crearance: 1.5 – 2.5 mm (0.059 – 0.098 in.)

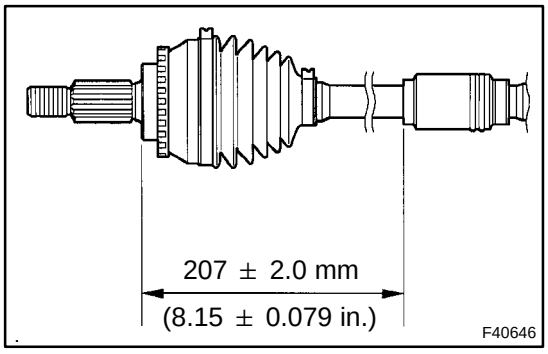

35. INSTALL FRONT DRIVE SHAFT DAMPER LH(M/T TRANSAXLE)

(a) Set the distance, as described below.
Distance: 207 ± 2.0 mm (8.15 ± 0.079 in.)

(b) Make sure that the front drive shaft damper LH is on the shaft groove.

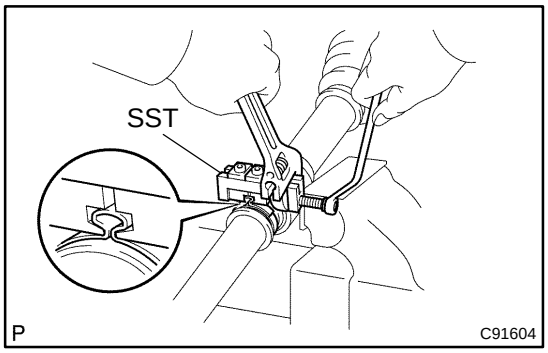

(c) Place SST onto the front drive shaft damper LH clamp.
SST 09521–24010

(d) Tighten the SST so that the front drive shaft damper LH clamp is pinched.

NOTICE:
Do not overtighten the SST.

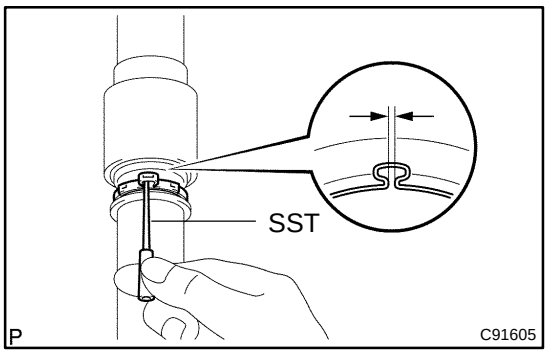

(e) Using SST, adjust the clearance of the front drive shaft damper LH clamp.
SST 09240–00020
Crearance: 0.5 – 1.2 mm (0.020 – 0.047 in.)

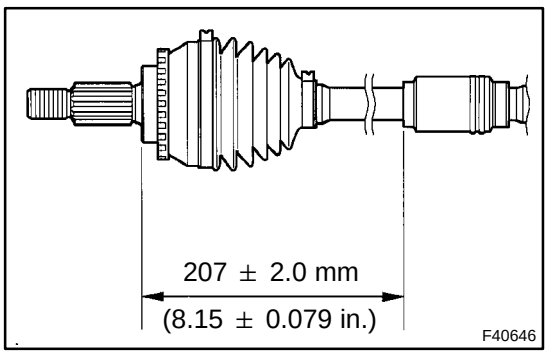

36. INSTALL FRONT DRIVE SHAFT DAMPER RH(EXCEPT 1MZ–FE ENGINE TYPE)

(a) Set the distance, as described below.
Distance: 207 ± 2.0 mm (8.15 ± 0.079 in.)

(b) Make sure that the front drive shaft damper RH is on the shaft groove.

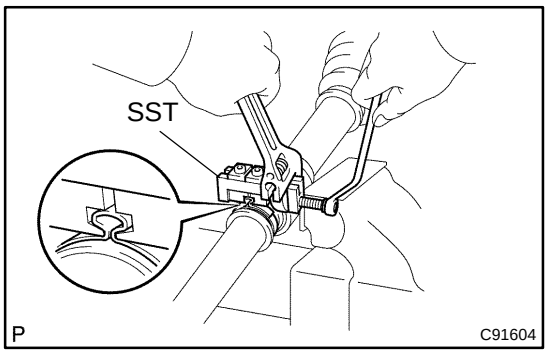

(c) Place SST onto the front drive shaft damper RH clamp.
SST 09521–24010
(d) Tighten the SST so that the front drive shaft damper RH clamp is pinched.

NOTICE:
Do not overtighten the SST.

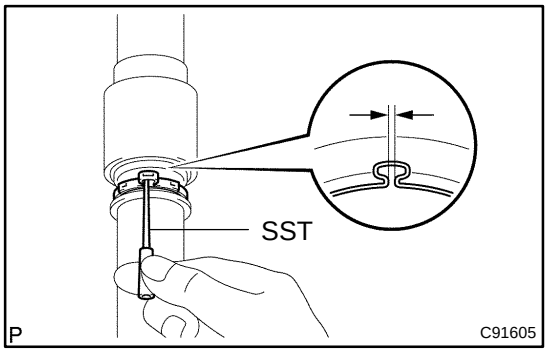

(e) Using SST, adjust the clearance of the front drive shaft damper RH clamp.
SST 09240–00020
Crearance: 0.5 – 1.2 mm (0.020 – 0.047 in.)

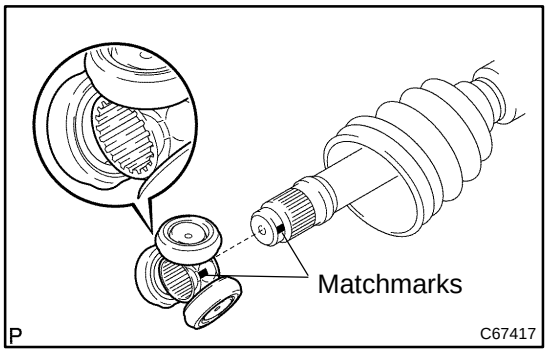

37. INSTALL FRONT DRIVE INBOARD JOINT ASSY LH

(a) Place the beveled side of the tripod axial spline toward the front drive outboard joint shaft assy LH.
(b) Align the matchmarks placed before removal.
(c) Using a brass bar and hammer, tap in the tripod to the front drive outboard joint shaft assy LH.

NOTICE:
Do not tap the roller.

(d) Using a snap ring expander, install a new front drive inner shaft inner RH shaft snap ring.
(e) Pack the front drive outboard joint shaft assy LH and front axle inboard joint boot with grease in the boot kit.
Grease capacity:
185 – 195 g (6.5 – 6.9 oz.)

38. INSTALL FR AXLE INBOARD JOINT BOOT

(a) Install the front axle inboard joint boot to the front drive outboard joint shaft assy LH.

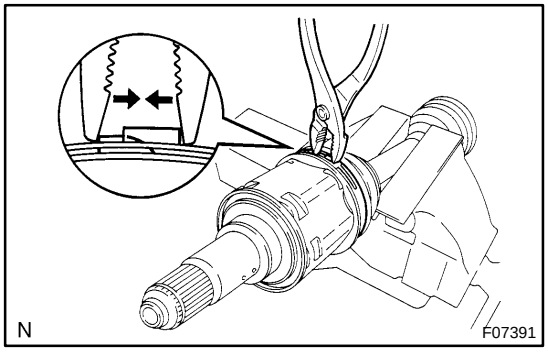

39. INSTALL FRONT AXLE INBOARD JOINT BOOT CLAMP

(a) Using pliers, pinch the claws to compress the front axle inboard joint boot LH No.2 clamp and engage the other claws.

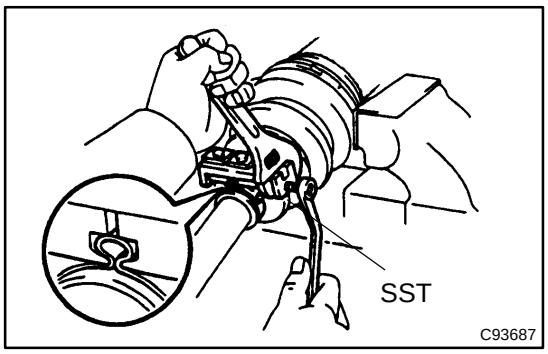

(b) Place SST onto the front axle inboard joint boot RH clamp.
SST 09521–24010

(c) Tighten the SST so that the front axle inboard joint boot RH clamp is pinched.

NOTICE:

Do not overtighten the SST.

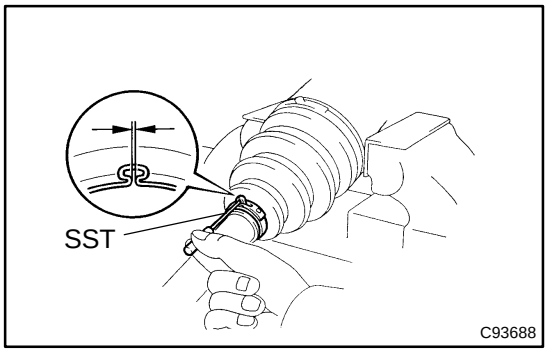

(d) Using SST, adjust the clearance of the front axle inboard joint boot RH clamp.
SST 09240–00020
Clearance: 1.9 mm (0.075 in.) or less

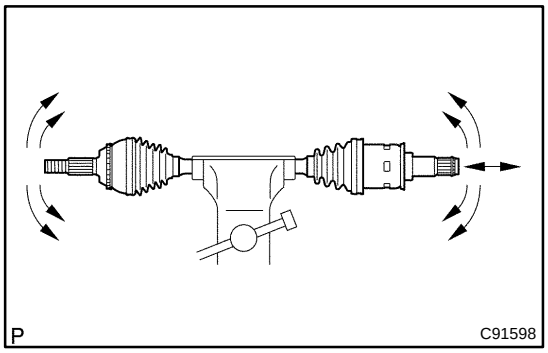

40. INSPECT FRONT DRIVE SHAFT

(a) Check to see that there is no remarkable play in the outboard joint.

(b) Check to see that the inboard joint slides smoothly in the thrust direction.

(c) Check to see that there is no remarkable play in the radial direction of the inboard joint.

(d) Check the boots for damage.

NOTICE:

Move the drive shaft assy keeping it level.

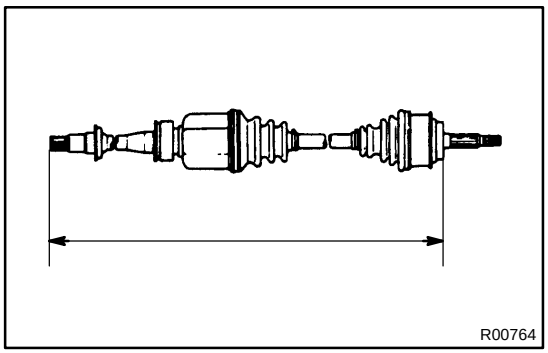

(e) Make sure that the 2 boots are on the shaft groove.

(f) Make sure that the 2 boots are not stretched or contracted when the drive shaft is at standard length.

Drive shaft standard length: mm (in.)

1MZ–FE:

LH	576.9 ± 2.0 (22.713 ± 0.079)
RH	895.4 ± 2.0 (35.252 ± 0.079)

2AZ–FE:

LH	591.2 ± 2.0 (23.276 ± 0.079)
RH	890 ± 2.0 (35.039 ± 0.079)

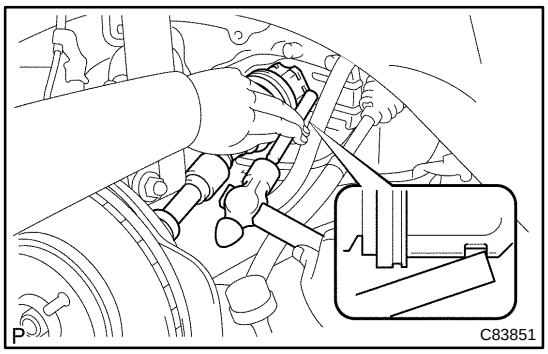

41. INSTALL FRONT DRIVE SHAFT ASSY LH

(a) Coat the spline of the front drive inboard joint assy LH with ATF.
(b) Aline the shaft splines and install the front drive shaft assy LH with brass bar and hammer.

NOTICE:
- **Set the snap ring with opening side facing downward.**
- **Be careful not to damage the oil seal.**

HINT:
Whether the front drive inboard joint assy LH is in contact with the pinion shaft or not can be known from the sound or feeling when driving it.

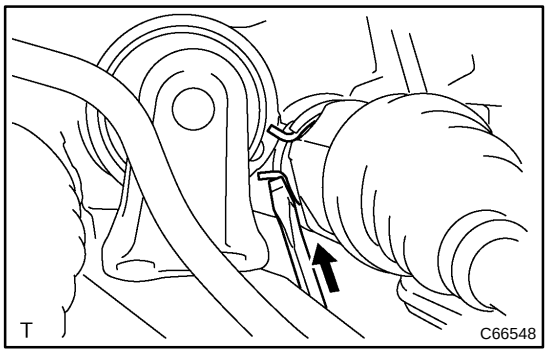

42. INSTALL FRONT DRIVE SHAFT ASSY RH

(a) Using a screwdriver, install the drive shaft bearing bracket hole snap ring.
(b) Install the bolt.
Torque: 32.4 N·m (330 kgf·cm, 24 ft·lbf)

NOTICE:
Do not damage the oil seal.

43. INSTALL FRONT AXLE ASSY LH

(a) Install the front drive shaft assy LH to the front axle assy LH.

NOTICE:
- **Be careful not to damage the outboard joint boot.**
- **w/ ABS:**
  Be careful not to damage the speed sensor rotor.

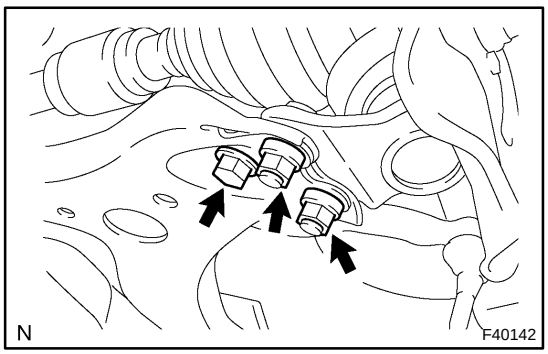

44. INSTALL FRONT SUSPENSION ARM SUB–ASSY LOWER NO.1 LH

(a) Install the lower ball joint assy front LH to the front suspension arm sub–assy lower No. 1 LH with the bolt and nut.
Torque: 127 N·m (1,295 kgf·cm, 94 ft·lbf)

45. INSTALL TIE ROD ASSY LH

(a) Install the tie rod assy LH to the steering knuckle LH with the nut.
Torque: 49 N·m (500 kgf·cm, 36 ft·lbf)

(b) Install a new cotter pin.

NOTICE:

If the holes for the cotter pin are not aligned, tighten the nut further to 60°.

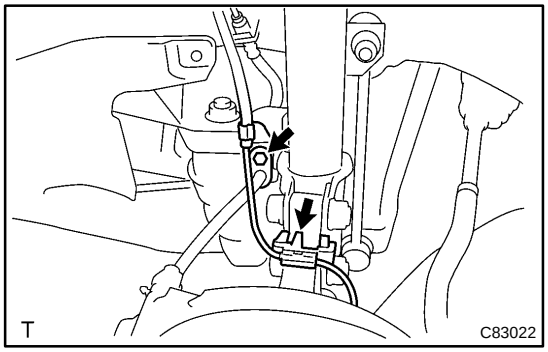

46. INSTALL SPEED SENSOR FRONT LH(W/ ABS)

(a) Install the sensor wire and front flexible hose No.1 to shock absorber with the bolt.
Torque: 18.8 N·m (192 kgf·cm, 14 ft·lbf)

(b) Install the sensor wire clamp.

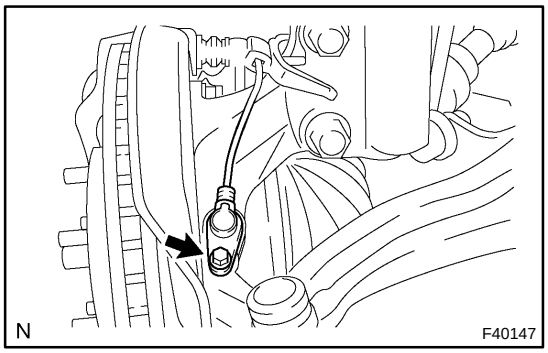

(c) Install the speed sensor front LH to the steering knuckle LH with the bolt.
Torque: 8.0 N·m (82 kgf·cm, 71 in.·lbf)

NOTICE:

- **Be careful not to damage the speed sensor.**
- **Prevent foreign matter from being attached.**
- **Do not twist the sensor wire when installing the sensor.**

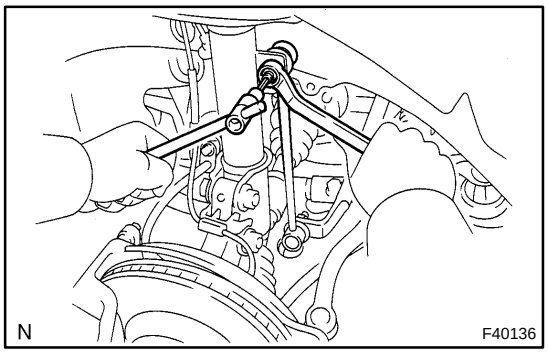

47. INSTALL FRONT STABILIZER LINK ASSY LH

(a) Install the front stabilizer link assy LH with the nut.
Torque: 74 N·m (755 kgf·cm, 55 ft·lbf)

HINT:

If the ball joint turns together with the nut, use a hexagon (6 mm) wrench to hold the stud.

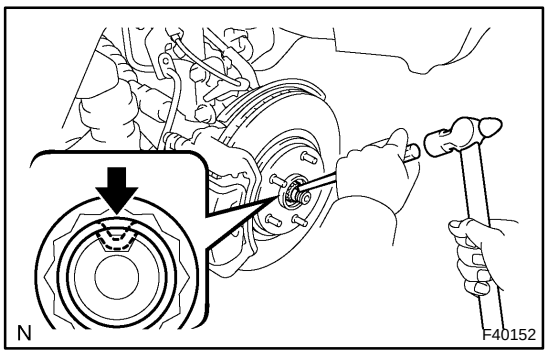

48. INSTALL FRONT AXLE HUB LH NUT

(a) Install a new front axle hub LH nut.
Torque: 294 N·m (2,998 kgf·cm, 217 ft·lbf)

(b) Using chisel and hammer, stake the front axle hub LH nut.

49. INSTALL FRONT WHEEL

50. ADD AUTOMATIC TRANSAXLE FLUID(A/T TRANSAXLE)(See page 40–1)

51. INSPECT AUTOMATIC TRANSAXLE FLUID(A/T TRANSAXLE)

52. ADD MANUAL TRANSAXLE OIL(M/T TRANSAXLE)

53. INSPECT MANUAL TRANSAXLE OIL(M/T TRANSAXLE)

54. INSPECT AND ADJUST FRONT WHEEL ALIGNMENT(See page 26–5)

55. CHECK ABS SPEED SENSOR SIGNAL(W/ ABS)

w/ VSC (See page 05–452)

w/o VSC (BOSCH MADE) (See page 05–363)

w/o VSC (DENSO MADE) (See page 05–404)

FRONT AXLE HUB SUB–ASSY LH

3006H–01

REPLACEMENT

HINT:

- COMPONENTS: See page 30–4
- Replace the RH side by the same procedures with LH side.

1. REMOVE FRONT WHEEL

2. REMOVE FRONT AXLE HUB LH NUT
(See page 30–8)
SST 09930–00010

3. DISCONNECT SPEED SENSOR FRONT LH(W/ ABS)
(See page 30–8)

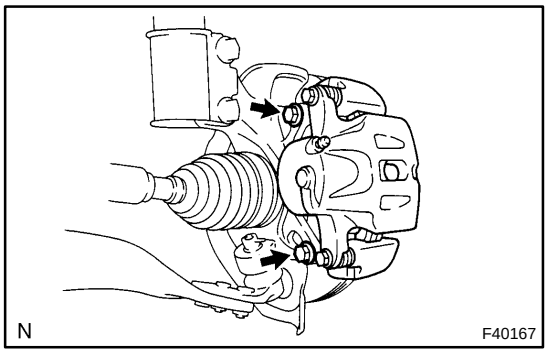

4. DISCONNECT FRONT DISC BRAKE CALIPER ASSY LH

(a) Remove the 2 bolts, disconnect the front disc brake caliper assy LH from the steering knuckle LH.

5. REMOVE FRONT DISC

6. DISCONNECT TIE ROD ASSY LH
(See page 30–8)
SST 09628–62011

7. DISCONNECT FRONT SUSPENSION ARM SUB–ASSY LOWER NO.1 LH
(See page 30–8)

8. REMOVE FRONT AXLE ASSY LH

(a) Using a plastic hammer, separate the front drive shaft assy LH from the front axle hub sub–assy LH.

NOTICE:
w/ ABS:
Be careful not to damage the boot and ABS speed sensor rotor.

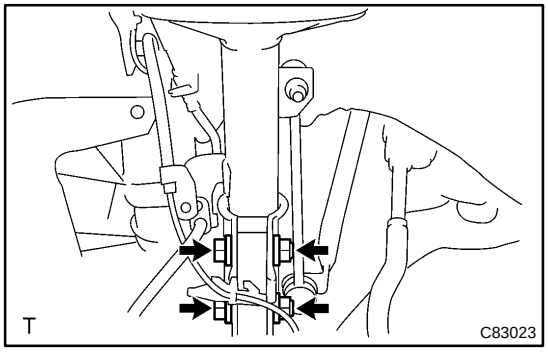

(b) Remove the 2 bolts, nuts and steering knuckle LH with the front axle hub sub–assy LH.

9. REMOVE LOWER BALL JOINT ASSY FRONT LH

(a) Remove the cotter pin and nut.

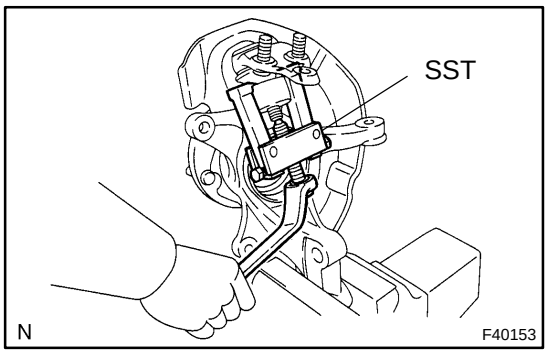

(b) Using SST, remove the lower ball joint assy front LH.
SST 09628–62011

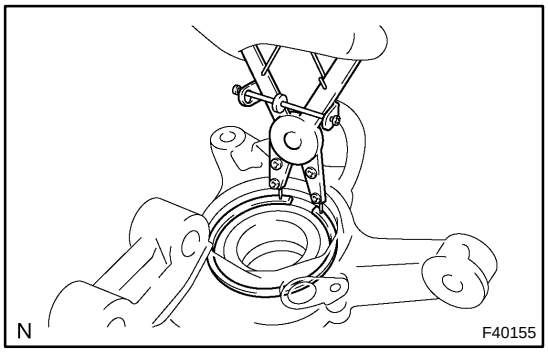

10. REMOVE FRONT AXLE HUB LH HOLE SNAP RING

(a) Using a snap ring plier, remove the front axle hub LH hole snap ring.

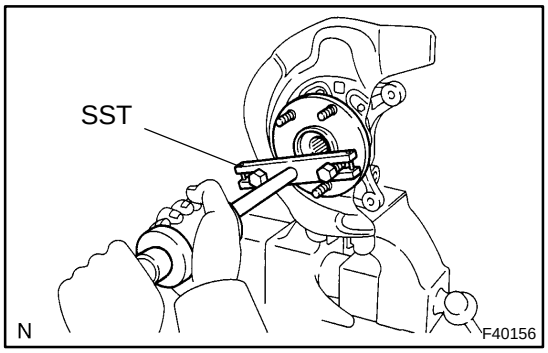

11. REMOVE FRONT AXLE HUB SUB–ASSY LH

(a) Using SST, remove the front axle hub sub–assy LH.
SST 09520–00031

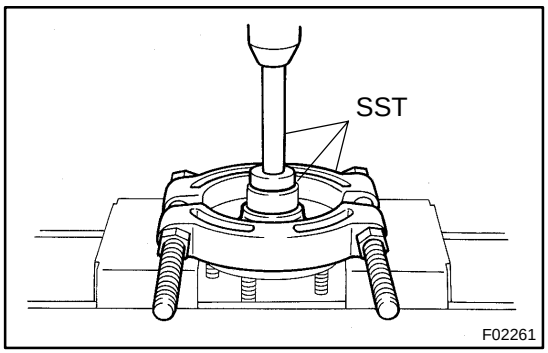

(b) Using SST and a press, remove the inner race (outside) from the front axle hub sub–assy LH.
SST 09950–00020, 09950–60010 (09951–00410), 09950–70010 (09951–07100)

12. REMOVE DISC BRAKE DUST COVER FRONT LH

(a) Using a torx wrench (T30), remove the 4 bolts and disc brake dust cover front LH.

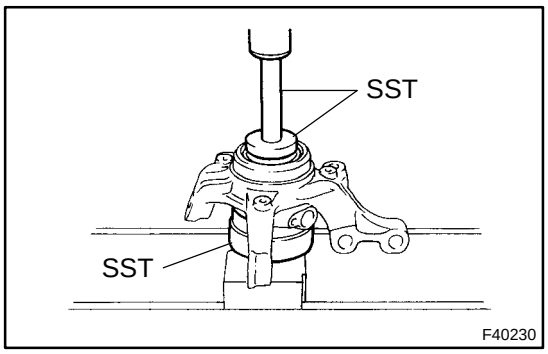

13. REMOVE FRONT AXLE HUB LH BEARING

(a) Place the inner race (outside) on the front axle hub LH bearing.

(b) Using SST and a press, press the front axle hub LH bearing until it contacts with the SST.

SST 09527–17011, 09950–60010 (09951–00600), 09950–70010 (09951–07100)

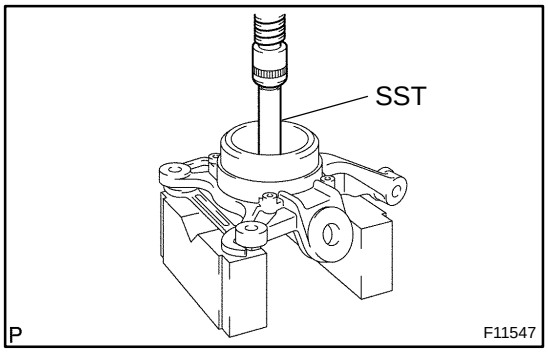

(c) Using a spanner to make the steering knuckle LH horizontal, fix it to the V block as shown in the illustration.

NOTICE:

Be sure the steering knuckle is horizontally positioned.

(d) Using SST and a press, remove the front axle hub LH bearing.

SST 09950–60010 (09951–00600), 09950–70010 (09951–07100)

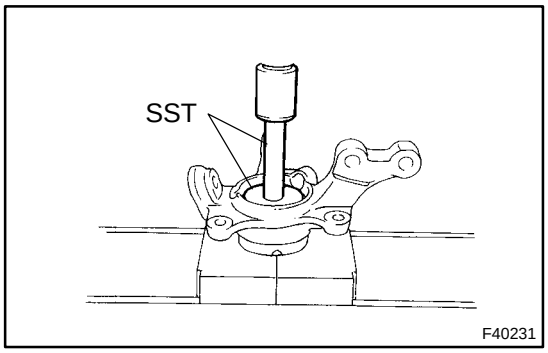

14. INSTALL FRONT AXLE HUB LH BEARING

(a) Using SST and a press, install a new front axle hub LH bearing to the steering knuckle LH.

SST 09950–60020 (09951–00790), 09950–70010 (09951–07100)

15. INSTALL DISC BRAKE DUST COVER FRONT LH

(a) Place the disc brake dust cover front LH and using a torx wrench (T30), torque the 4 bolts.

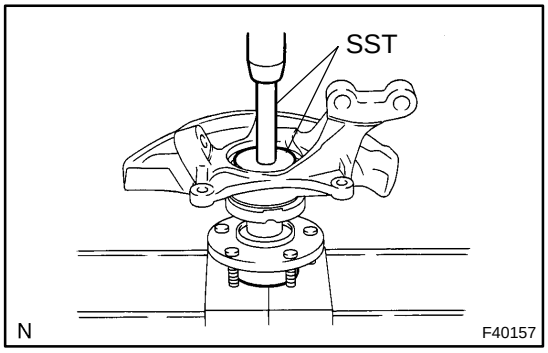

16. INSTALL FRONT AXLE HUB SUB–ASSY LH

(a) Using SST and a press, install the front axle hub sub–assy LH.

SST 09608–32010, 09950–60020 (09951–00790), 09950–70010 (09951–07100)

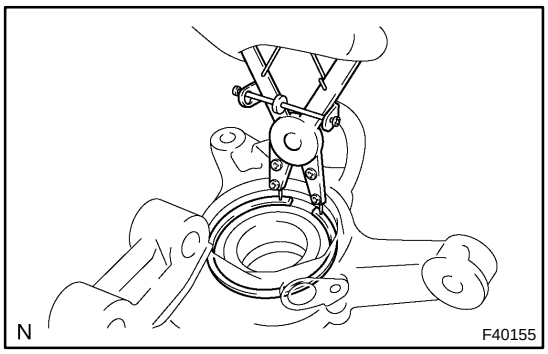

17. INSTALL FRONT AXLE HUB LH HOLE SNAP RING

(a) Using snap ring plier, install a new front axle hub LH hole snap ring.

18. INSTALL LOWER BALL JOINT ASSY FRONT LH

(a) Install the lower ball joint assy front LH and tighten the nut.
Torque: 123 N·m (1,254 kgf·cm, 91 ft·lbf)
(b) Install a new cotter pin.

NOTICE:
If the holes for the cotter pin are not aligned, tighten the nut further up to 60°.

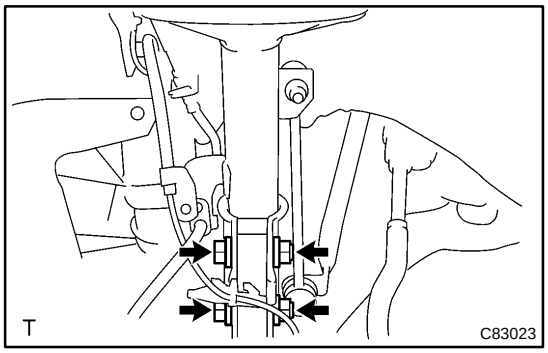

19. INSTALL FRONT AXLE ASSY LH

(a) Install the 2 bolts, nuts and front axle assy LH to the shock absorber assy front LH.
Torque: 210 N·m (2,141 kgf·cm, 155 ft·lbf)

HINT:
Insert the bolt from the rear side of the vehicle and tighten the nut.

(b) Push the front axle assy LH toward the outside of the vehicle, fit the splined part of the front drive shaft assy LH to that of the front axle assy LH and insert the front drive shaft assy LH into the front axle assy LH.

NOTICE:
- **Do not push out the front axle assy LH excessively.**
- **Be careful not to damage the outboard joint boot.**
- **w/ ABS:**
  Be careful not to damage the speed sensor rotor.

20. INSTALL FRONT SUSPENSION ARM SUB–ASSY LOWER NO.1 LH
(See page 30–8)
21. INSTALL TIE ROD ASSY LH
(See page 30–8)
22. INSTALL FRONT DISC

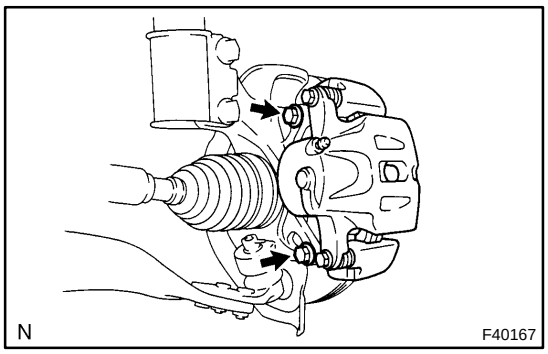

23. INSTALL FRONT DISC BRAKE CALIPER ASSY LH

(a) Install the front disc brake caliper assy LH with the 2 bolts to the steering knuckle LH.
Torque: 106.9 N·m (1,090 kgf·cm, 79 ft·lbf)

24. INSTALL FRONT AXLE HUB LH NUT
(See page 30–8)

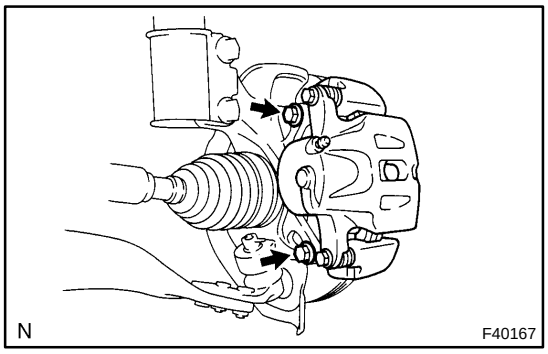

25. DISCONNECT FRONT DISC BRAKE CALIPER ASSY LH

(a) Remove the 2 bolts, disconnect the front disc brake caliper assy LH from the steering knuckle LH.

26. REMOVE FRONT DISC

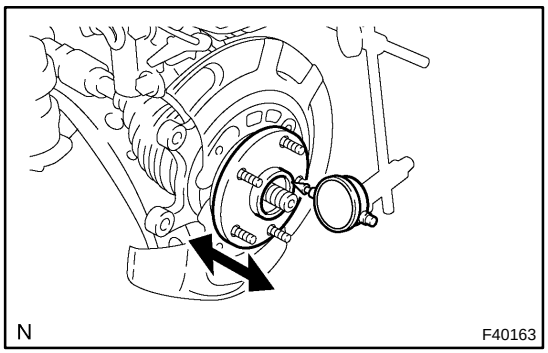

27. INSPECT BEARING BACKLASH

(a) Using a dial indicator, check the backlash near the center of the axle hub.
Maximum: 0.05 mm (0.0020 in.)

If the backlash exceeds the maximum, replace the bearing.

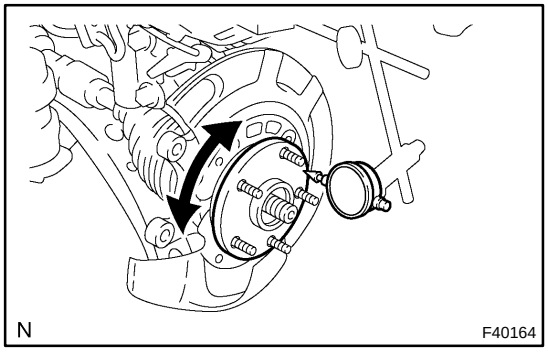

28. INSPECT AXLE HUB DEVIATION

(a) Using a dial indicator, check the deviation at the surface of the axle hub outside the hub bolt.
Maximum: 0.05 mm (0.0020 in.)

If the backlash exceeds the maximum, replace the axle hub.

29. INSTALL FRONT DISC

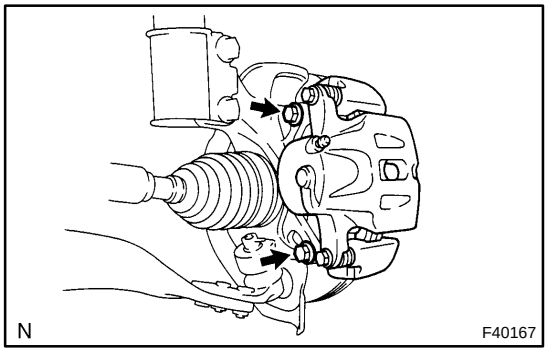

30. INSTALL FRONT DISC BRAKE CALIPER ASSY LH

(a) Install the front disc brake caliper assy LH with the 2 bolts to the steering knuckle LH.
Torque: 106.9 N·m (1,090 kgf·cm, 79 ft·lbf)

31. INSTALL SPEED SENSOR FRONT LH(W/ ABS)
(See page 30–8)

32. INSTALL FRONT WHEEL
Torque: 103 N·m (1,050 kgf·cm, 76 ft·lbf)

33. INSPECT AND ADJUST FRONT WHEEL ALIGNMENT(See page 26–5)

34. CHECK ABS SPEED SENSOR SIGNAL(W/ ABS)
w/ VSC (See page 05–452)
w/o VSC (BOSCH MADE) (See page 05–363)
w/o VSC (DENSO MADE) (See page 05–404)

FRONT AXLE LH HUB BOLT

30020–02

REPLACEMENT

HINT:

- COMPONENTS: See page 30–4
- Replace the RH side by the same procedures with LH side.

1. REMOVE FRONT WHEEL

2. DISCONNECT FRONT DISC BRAKE CALIPER ASSY LH(See page 30–21)

3. REMOVE FRONT DISC

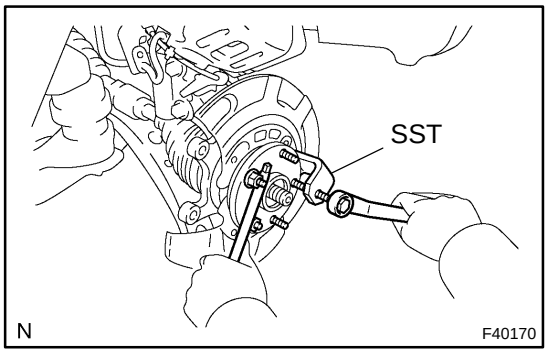

4. REMOVE FRONT AXLE LH HUB BOLT

(a) Using SST and a screwdriver or an equivalent to hold, remove the front axle LH hub bolt.
SST 09628–10011

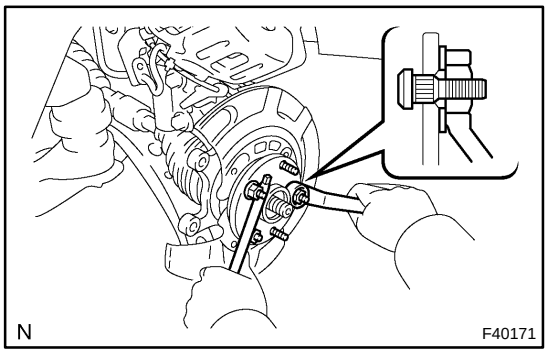

5. INSTALL FRONT AXLE LH HUB BOLT

(a) Install a washer and nut to a new front axle LH hub bolt as shown in the illustration.

(b) Using a screwdriver to hold, install the hub bolt by torquing the nut.

6. INSTALL FRONT DISC

7. INSTALL FRONT DISC BRAKE CALIPER ASSY LH(See page 30–21)

8. INSTALL FRONT WHEEL
Torque: 103 N·m (1,050 kgf·cm, 76 ft·lbf)

Author : Date : 1981

REAR AXLE HUB & BEARING ASSY LH

3006I–01

REPLACEMENT

HINT:

- COMPONENTS: See page 30–4
- Replace the RH side by the same procedures with the LH side.

1. REMOVE REAR WHEEL

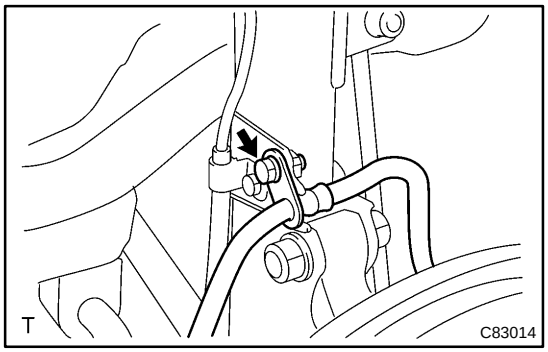

2. DISCONNECT REAR DISC BRAKE CALIPER ASSY LH(DISC REAR BRAKE TYPE)

(a) Remove the bolt and disconnect the rear flexible hose.

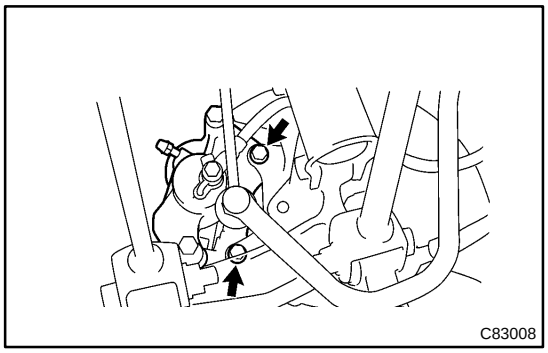

(b) Remove the 2 bolts and rear disc brake caliper assy LH.

(c) Support the brake caliper assy LH securely.

3. REMOVE REAR DISC(DISC REAR BRAKE TYPE)

4. REMOVE REAR BRAKE DRUM SUB–ASSY(DRUM REAR BRAKE TYPE)

5. DISCONNECT SKID CONTROL SENSOR WIRE(W/ ABS)

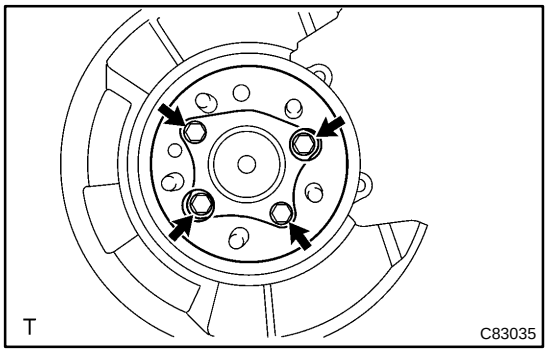

6. REMOVE REAR AXLE HUB & BEARING ASSY LH

(a) Remove the 4 bolts and rear axle hub LH & bearing assy LH.

Author : Date : 1982

7. REMOVE SKID CONTROL SENSOR(W/ ABS)
(See page 32–58)

8. INSTALL SKID CONTROL SENSOR(W/ ABS)
(See page 32–58)

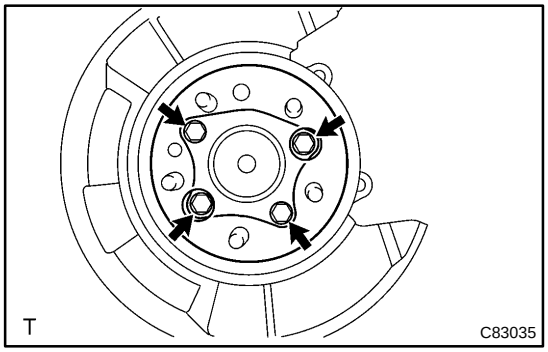

9. INSTALL REAR AXLE HUB & BEARING ASSY LH

(a) Install the rear axle hub LH & bearing assy LH with the 4 bolts.
Torque: 80 N·m (816 kgf·cm, 59 ft·lbf)

10. INSTALL SKID CONTROL SENSOR WIRE(W/ ABS)

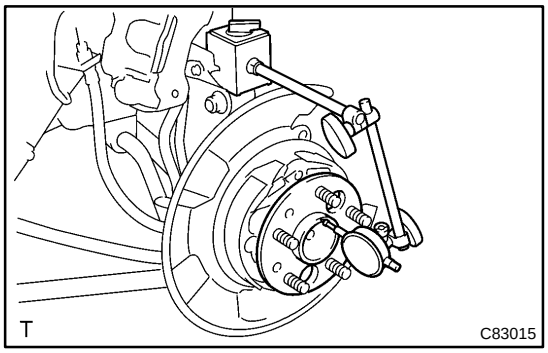

11. INSPECT BEARING BACKLASH

(a) Set a dial indicator near the center of the axle hub and check the backlash in the bearing shaft direction.
Maximum: 0.05 mm (0.0020 in.)

If the backlash exceeds the maximum, replace the axle hub assembly.

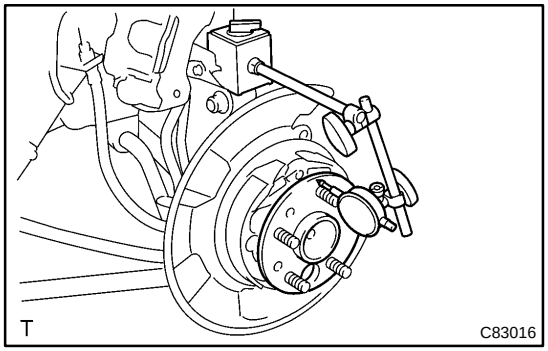

12. INSPECT AXLE HUB DEVIATION

(a) Using a dial indicator, check the deviation at the surface of the axle hub outside the hub bolt.
Maximum: 0.07 mm (0.0028 in.)

If the backlash exceeds the maximum, replace the axle hub assembly.

13. INSTALL REAR DISC(DISC REAR BRAKE TYPE)

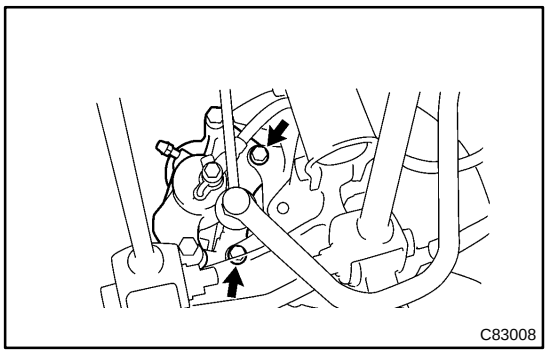

14. INSTALL REAR DISC BRAKE CALIPER ASSY LH(DISC REAR BRAKE TYPE)

(a) Install the rear disc brake caliper assy LH with the 2 bolts.
Torque: 61.8 N·m (630 kgf·cm, 46 ft·lbf)

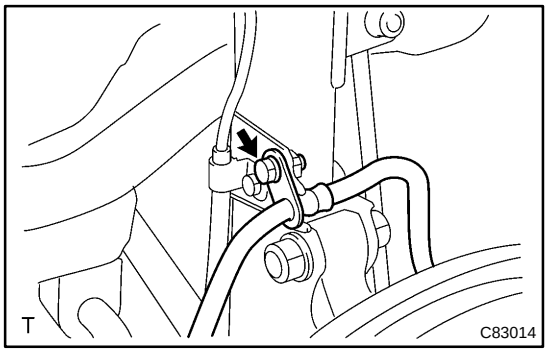

(b) Install the rear flexible hose with the bolt.
Torque: 18.8 N·m (192 kgf·cm, 14 ft·lbf)

15. INSTALL REAR BRAKE DRUM SUB–ASSY(DRUM REAR BRAKE TYPE)

16. INSTALL REAR WHEEL
Torque: 103 N·m (1,050 kgf·cm, 76 ft·lbf)

17. INSPECT AND ADJUST REAR WHEEL ALIGNMENT(See page 27–3)

18. CHECK ABS SPEED SENSOR SIGNAL(W/ ABS)
w/ VSC (See page 05–452)
w/o VSC (BOSCH MADE) (See page 05–363)
w/o VSC (DENSO MADE) (See page 05–404)

REAR AXLE CARRIER SUB–ASSY LH

3006J–04

REPLACEMENT

HINT:

- COMPONENTS: See page 30–4
- Replace the RH side by the same procedures with the LH side.

1. REMOVE REAR WHEEL

2. REMOVE STRUT ROD ASSY REAR
(See page 27–19)

3. DISCONNECT REAR DISC BRAKE CALIPER ASSY LH(DISC REAR BRAKE TYPE)
(See page 30–28)

4. REMOVE REAR DISC(DISC REAR BRAKE TYPE)

5. REMOVE REAR BRAKE DRUM SUB–ASSY(DRUM REAR BRAKE TYPE)

6. DISCONNECT SKID CONTROL SENSOR WIRE(W/ ABS)

7. DISCONNECT REAR BRAKE TUBE NO.4(DRUM REAR BRAKE TYPE)

(a) Using SST, disconnect the rear brake tube No.4 from the LH front or upper rear wheel brake cylinder assy.
SST 09023–00100

8. REMOVE REAR AXLE HUB & BEARING ASSY LH
(See page 30–28)

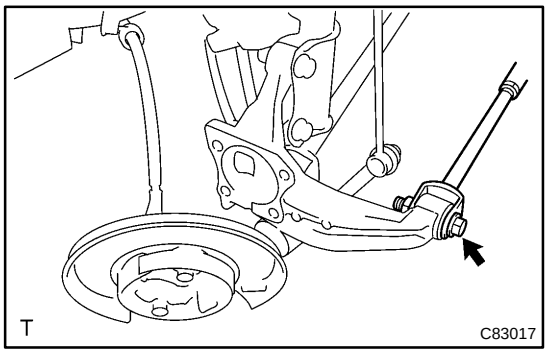

9. DISCONNECT REAR SUSPENSION ARM ASSY NO.2 LH

(a) Remove the bolt, nut and rear suspension arm assy No.2 LH from the rear axle carrier sub–assy LH.

HINT:
While fixing the nut, turn and remove the bolt.

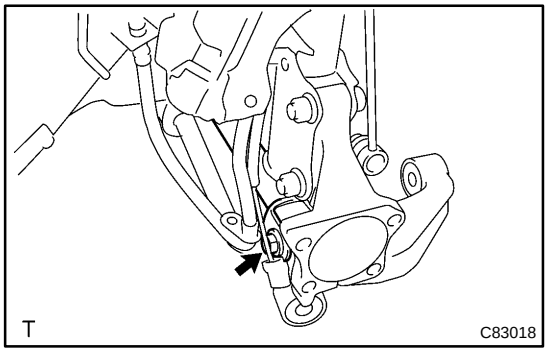

10. DISCONNECT REAR SUSPENSION ARM ASSY NO.1 LH

(a) Remove the bolt, nut and rear suspension arm assy No.1 LH from the rear axle carrier sub–assy LH.

HINT:
While fixing the nut, turn and remove the bolt.

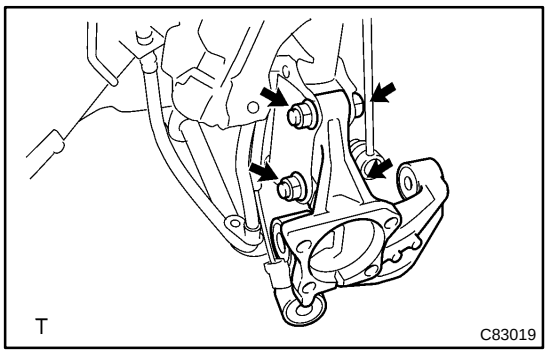

11. REMOVE REAR AXLE CARRIER SUB–ASSY LH

(a) Remove the 2 bolts, nuts and rear axle carrier sub–assy LH from the shock absorber assy rear LH.

NOTICE:
When removing bolt, stop the bolt from rotating and loosen the nut.

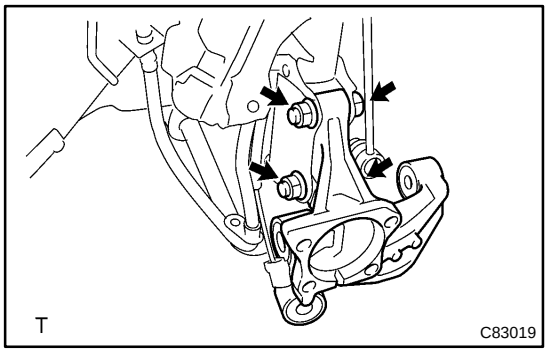

12. INSTALL REAR AXLE CARRIER SUB–ASSY LH

(a) Install the rear axle carrier sub–assy LH with the 2 bolts and nuts.

Torque: 255 N·m (2,600 kgf·cm, 188 ft·lbf)

NOTICE:
When installing bolt, stop the bolt from rotating and torque the nut.

HINT:
Insert the bolt from the rear side of the vehicle and install the nut.

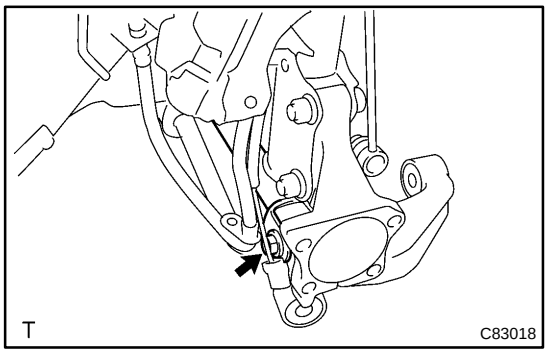

13. TEMPORARY TIGHTEN REAR SUSPENSION ARM ASSY NO.1 LH

(a) Install the rear suspension arm No.1 to the rear axle carrier sub–assy LH with the bolt and nut, temporarily tighten the bolt.

HINT:
Insert the bolt from the front side of the vehicle and while fixing the nut, turn and install the bolt.

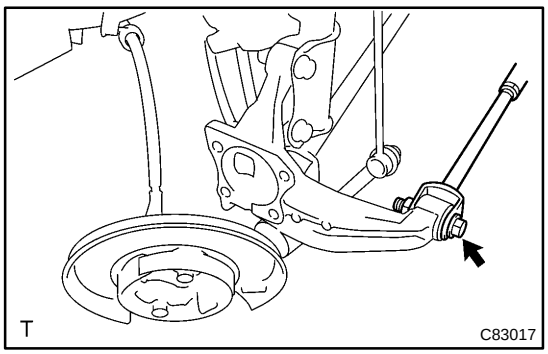

14. TEMPORARY TIGHTEN REAR SUSPENSION ARM ASSY NO.2 LH

(a) Install the rear suspension arm No.2 to the rear axle carrier sub–assy LH with the bolt and nut, temporarily tighten the bolt.

HINT:
Insert the bolt from the rear side of the vehicle and while fixing the nut, turn and install the bolt.

15. INSTALL REAR AXLE HUB & BEARING ASSY LH

(See page 30–28)

16. INSTALL REAR BRAKE TUBE NO.4(DRUM REAR BRAKE TYPE)

(a) Using SST, install the rear brake tube No.4 to the LH front or upper rear wheel brake cylinder assy.
SST 09023–00100
Torque: 15.2 N·m (155 kgf·cm,11 ft·lbf)

17. INSTALL SKID CONTROL SENSOR WIRE(W/ ABS)

18. INSTALL REAR DISC(DISC REAR BRAKE TYPE)

19. INSTALL REAR DISC BRAKE CALIPER ASSY LH(DISC REAR BRAKE TYPE)
(See page 30–28)

20. INSTALL REAR BRAKE DRUM SUB–ASSY(DRUM REAR BRAKE TYPE)

21. TEMPORARY TIGHTEN STRUT ROD ASSY REAR
(See page 27–19)

22. STABILIZE SUSPENSION(See page 27–19)

23. FULLY TIGHTEN REAR SUSPENSION ARM ASSY NO.1 LH
(See page 27–10)

24. FULLY TIGHTEN REAR SUSPENSION ARM ASSY NO.2 LH
(See page 27–14)

25. FULLY TIGHTEN STRUT ROD ASSY REAR
(See page 27–19)

26. FILL RESERVOIR WITH BRAKE FLUID(DRUM REAR BRAKE TYPE)

27. BLEED MASTER CYLINDER(DRUM REAR BRAKE TYPE)(See page 32–4)
SST 09023–00100

28. BLEED BRAKE LINE(DRUM REAR BRAKE TYPE)

29. CHECK FLUID LEVEL IN RESERVOIR(DRUM REAR BRAKE TYPE)

30. CHECK BRAKE FLUID LEAKAGE(DRUM REAR BRAKE TYPE)

31. INSTALL REAR WHEEL
Torque: 103 N·m (1,050 kgf·cm, 76 ft·lbf)

32. INSPECT AND ADJUST REAR WHEEL ALIGNMENT(See page 27–3)

33. CHECK ABS SPEED SENSOR SIGNAL(W/ ABS)
w/ VSC (See page 05–452)
w/o VSC (BOSCH MADE) (See page 05–363)
w/o VSC (DENSO MADE) (See page 05–404)

REAR AXLE LH HUB BOLT

30024–02

REPLACEMENT

HINT:

- COMPONENTS: See page 30–4
- Replace the RH side by the same procedures with the LH side.

1. REMOVE REAR WHEEL

2. REMOVE REAR DISC BRAKE CALIPER ASSY LH(DISC REAR BRAKE TYPE)(See page 30–28)

3. REMOVE REAR DISC(DISC REAR BRAKE TYPE)

4. REMOVE REAR BRAKE DRUM SUB–ASSY(DRUM REAR BRAKE TYPE)

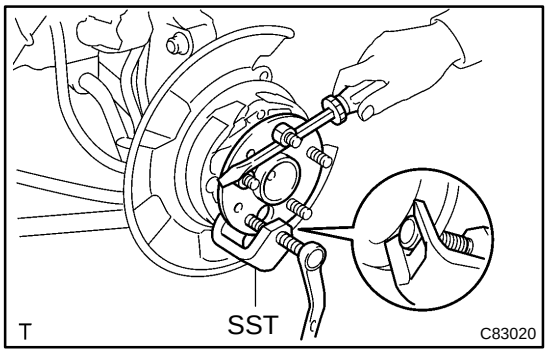

5. REMOVE REAR AXLE LH HUB BOLT

(a) Using SST and a screwdriver or an equivalent to hold, remove the rear axle LH hub bolt.
SST 09628–10011

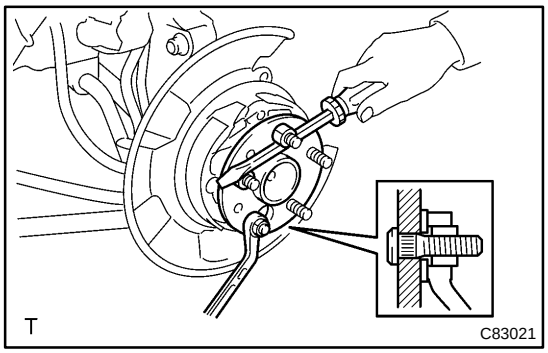

6. INSTALL REAR AXLE LH HUB BOLT

(a) Install a washer and nut to a new rear axle LH hub bolt as shown in the illustration.

(b) Using a screwdriver to hold, install the rear axle LH hub bolt by torquing the nut.

7. INSTALL REAR DISC(DISC REAR BRAKE TYPE)

8. INSTALL REAR DISC BRAKE CALIPER ASSY LH(DISC REAR BRAKE TYPE)(See page 30–28)

9. INSTALL REAR BRAKE DRUM SUB–ASSY(DRUM REAR BRAKE TYPE)

10. INSTALL REAR WHEEL
Torque: 103 N·m (1,050 kgf·cm, 76 ft·lbf)

BRAKE SYSTEM

32038–02

PRECAUTION

- **Care must be taken to replace each part properly as it could affect the performance of the brake system and result in a driving hazard. Replace the parts with parts having the same part number or equivalent.**
- **It is very important to keep parts and the area clean when repairing the brake system.**
- **If the vehicle is equipped with a mobile communication system, refer to the precaution in the INTRODUCTION section.**

32039–04

PROBLEM SYMPTOMS TABLE

Use the table below to help you find the cause of the problem. The numbers indicate the priority of the likely cause of the problem. Check each part in order. If necessary, replace these parts.

Symptom	Suspect Area	See page
Low pedal or spongy pedal	1. Fluid leaks for brake system	–
	2. Air in brake system	32–4
	3. Piston seals (Worn or damaged)	32–25 32–33
	4. Rear brake shoe clearance (Out of adjustment)	32–39
	5. Master cylinder (Fauly)	32–12
	6. Booster push rod (Out of adjustment)	32–12
Brake drag	1. Brake pedal freeplay (Minimal)	32–6
	2. Parking brake pedal travel (Out of adjustment)	33–2
	3. Parking brake wire (Sticking)	33–12 33–16 33–19
	4. Rear brake shoe clearance (Out of adjustment)	32–39
	5. Parking brake shoe clearance (Out of adjustment)	33–21
	6. Pad or lining (Cracked or distorted)	32–25 32–33 32–39
	7. Piston (Stuck)	32–25 32–33
	8. Piston (Frozen)	32–25 32–33
	9. Anchor, tension or return spring (Faulty)	32–39 33–21
	10.Booster push rod (Out adjustment)	32–12
	11.Master cylinder (Faulty)	32–12
Brake pull	1. Piston (Stuck)	32–25 32–33
	2. Pad or lining (Oily)	32–25 32–33 32–39
	3. Piston (Frozen)	32–25 32–33
	4. Disc (Scored)	32–25 32–33
	5. Pad or lining (Cracked or distorted)	32–25 32–33 32–39

Hard pedal but brake inefficient	1. Fluid leaks for brake system	–
	2. Air in brake system	32–4
	3. Pad or lining (Worn)	32–25 32–33 32–39
	4. Pad or lining (Cracked or distorted)	32–25 32–33 32–39
	5. Rear brake shoe clearance (Out of adjustment)	32–39
	6. Pad or lining (Oily)	32–25 32–33 32–39
	7. Pad or lining (Glanzed)	32–25 32–33 32–39
	8. Disc (Scored)	32–25 32–33
	9. Booster push rod (Out of adjustment)	32–12
Noise from brakes	1. Pad on lining (Cracked or distorted)	32–25 32–33 32–39
	2. Installation bolt (Loose)	32–25 32–33
	3. Disc (Scored)	32–25 32–33
	4. Pad support plate (Loose)	32–25 32–33
	5. Sliding pin (Worn)	32–25 32–33
	6. Pad or lining (dirty)	32–25 32–33 32–39
	7. Pad or lining (Glanzed)	32–25 32–33 32–39
	8. Anchor, tension or return spring (Faulty)	32–39 33–21
	9. Anti–squeal shim (Damaged)	32–25 32–33
	10.Shoe hold–down spring (Damaged)	32–39 33–21

BRAKE FLUID

3203B–02

BLEEDING

HINT:

If any work is done on the brake system or if air in the brake lines is suspected, bleed the air from the system.

NOTICE:

Wash off the brake fluid immediately if it comes into contact with a painted surface.

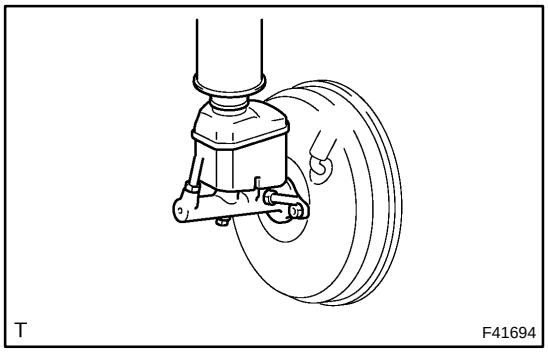

1. FILL RESERVOIR WITH BRAKE FLUID

Fluid: SAE J1703 or FMVSS No. 116 DOT3

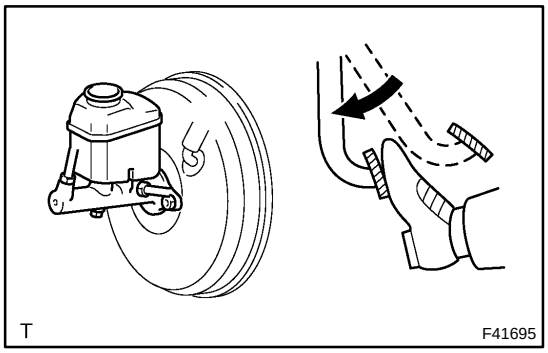

2. BLEED MASTER CYLINDER

HINT:

If the master cylinder has been disassembled or if the reservoir becomes empty, bleed the air from the master cylinder.

(a) Remove the air cleaner assembly with hose.

(b) Disconnect the brake lines from the master cylinder.
SST 09023–00100

(c) Slowly depress the brake pedal and hold it.

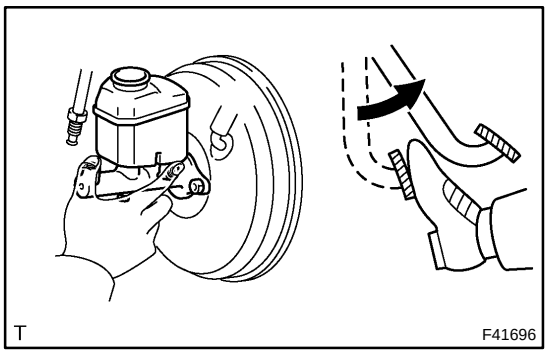

(d) Block off the outer holes with your fingers, and release the brake pedal.

(e) Repeat (c) and (d) 3 or 4 times.

(f) Install the air cleaner assembly with hose.

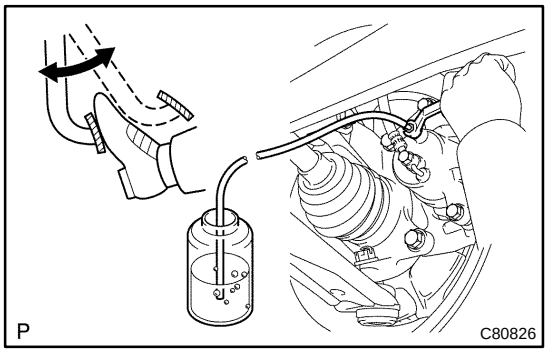

3. BLEED BRAKE LINE

(a) Connect the vinyl tube to the brake caliper.

(b) Depress the brake pedal several times, then loosen the bleeder plug with the pedal held down.

(c) At the point when fluid stops coming out, tighten the bleeder plug, then release the brake pedal.
Torque: 8.3 N·m (85 kgf·cm, 74 in.·lbf)

(d) Repeat (b) and (c) until all the air in the fluid has been bled out.

(e) Repeat the above procedure to bleed the air out of the brake line for each wheel.

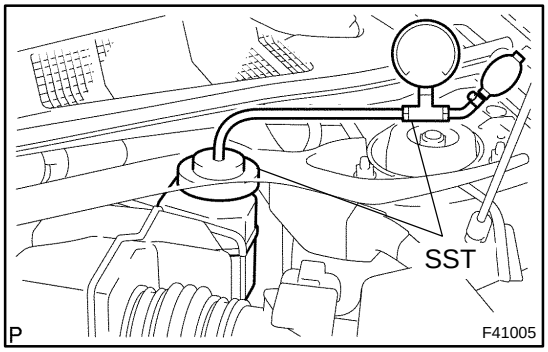

4. BLEED ABS & TRACTION ACTUATOR ASSY(W/ VSC)

(a) Remove the reservoir cap.
(b) Install SST to the reservoir.
SST 09992–00242, 09992–00350
(c) Connect the vinyl tube to the bleeder plug of the ABS & TRACTION actuator.
(d) Using SST, apply the pressure described below to the reservoir.
Pressure: 98.1 kPa (1.0 kgf/cm^2, 14.2 psi)

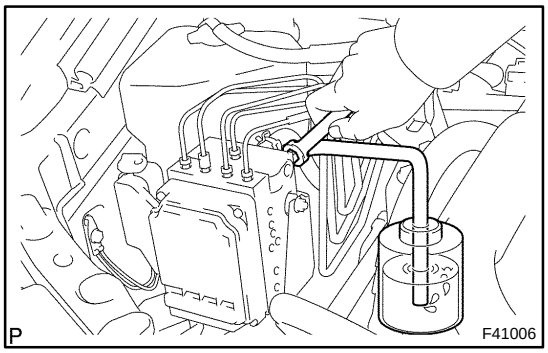

(e) Loosen the bleeder plug.
(f) Bleed the air out of the ABS & TRACTION actuator, tighten the bleeder plug.
Torque: 8.3 N·m (85 kgf·cm, 74 in.·lbf)

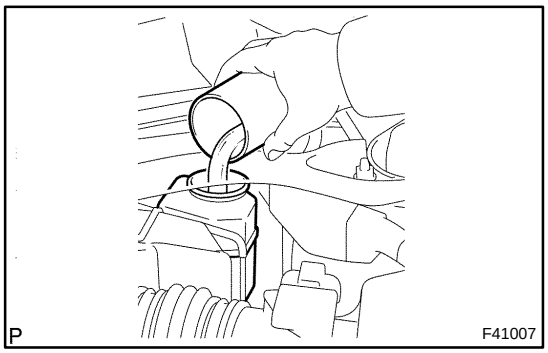

5. CHECK FLUID LEVEL IN RESERVOIR

(a) Check the fluid level and add fluid if necessary.
Fluid: SAE J1703 or FMVSS No. 116 DOT3

BRAKE PEDAL SUPPORT ASSY

320CX–01

ADJUSTMENT

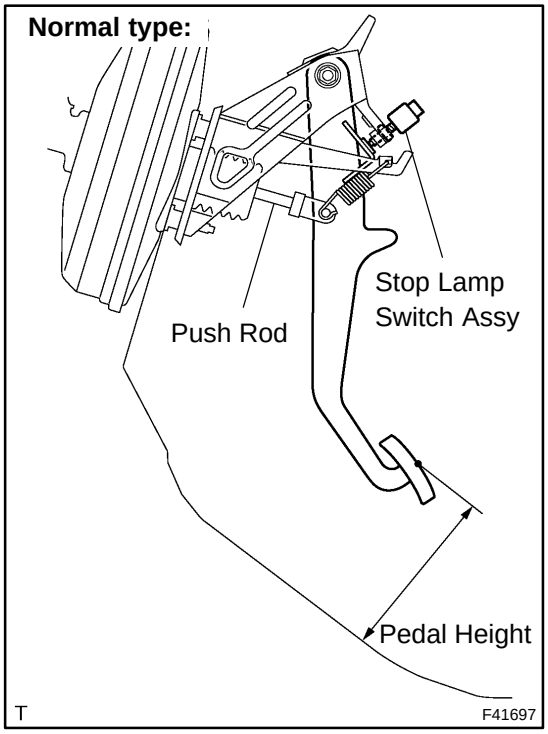

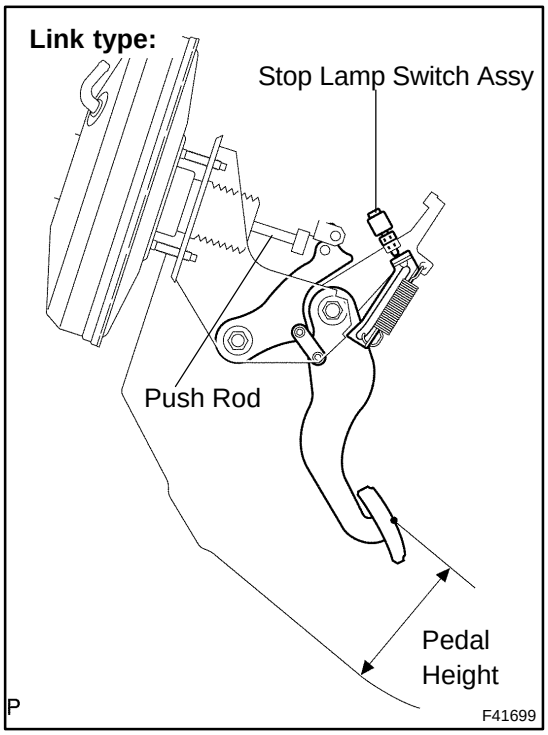

1. CHECK AND ADJUST BRAKE PEDAL HEIGHT

(a) Inspect brake pedal height.

Pedal height from asphalt sheet:
144.1 – 154.1 mm (5.673 – 6.067 in.)

(b) Adjust brake pedal height.

(1) Remove the instrument panel finish panel sub–assy lower and instrument panel insert sub–assy lower LH.

(2) Disconnect the connector from the stop lamp switch assy.

(3) Loosen the stop lamp switch lock nut and remove the stop lamp switch assy.

(4) Loosen the clevis lock nut.

(5) Adjust the pedal height by turning the pedal push rod.

(6) Tighten the push rod lock nut.

Torque: 26 N·m (265 kgf·cm, 19 ft·lbf)

(7) Install the stop lamp switch assy.

(8) Connect the connector to the stop lamp switch assy.

(9) Push the brake pedal in 5 – 10 mm (0.20 – 0.39 in.), turn the stop lamp switch assy to lock the nut in the position where the stop lamp goes off.

(10) After installation, push the brake pedal in 5 – 10 mm (0.20 – 0.39 in.), check that stop lamp lights up.

(11) TMMK made:
Install the .

(12) Install the instrument panel insert sub–assy lower LH and instrument panel finish panel sub–assy lower.

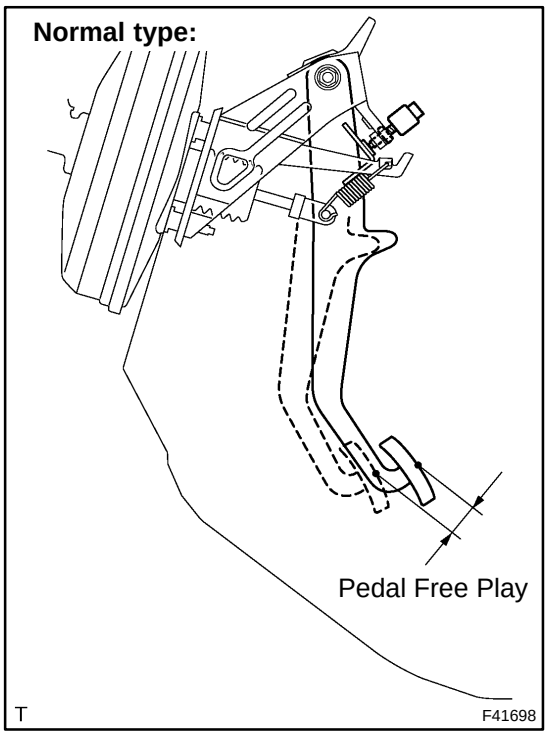

2. CHECK PEDAL FREE PLAY

(a) Stop the engine and depress the brake pedal several times until there is no more vacuum left in the booster.

(b) Push in the pedal until the beginning of the resistance is felt. Measure the distance, as shown.

Pedal freeplay: 1 – 6 mm (0.04 – 0.24 in.)

If incorrect, check the stop lamp switch assy clearance.

If the clearance is OK, then troubleshoot the brake system.

Stop lamp switch clearance:
0.5 – 2.5 mm (0.020 – 0.098 in.)

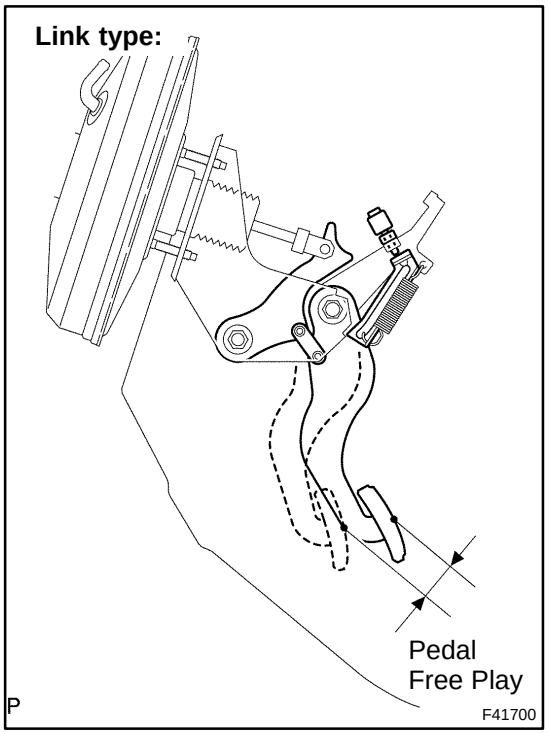

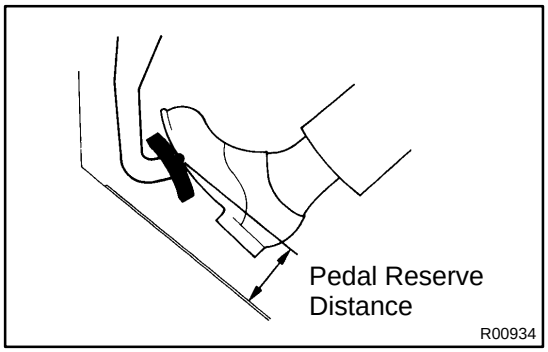

3. CHECK PEDAL RESERVE DISTANCE

(a) Release the parking brake pedal.
With engine running, depress the pedal and measure the pedal reserve distance, as shown.

Pedal reserve distance from asphalt sheet at 490 N (50 kgf, 110.2 lbf): More than 63 mm (2.48 in.)

If incorrect, troubleshoot the brake system.

320CY–01

COMPONENTS

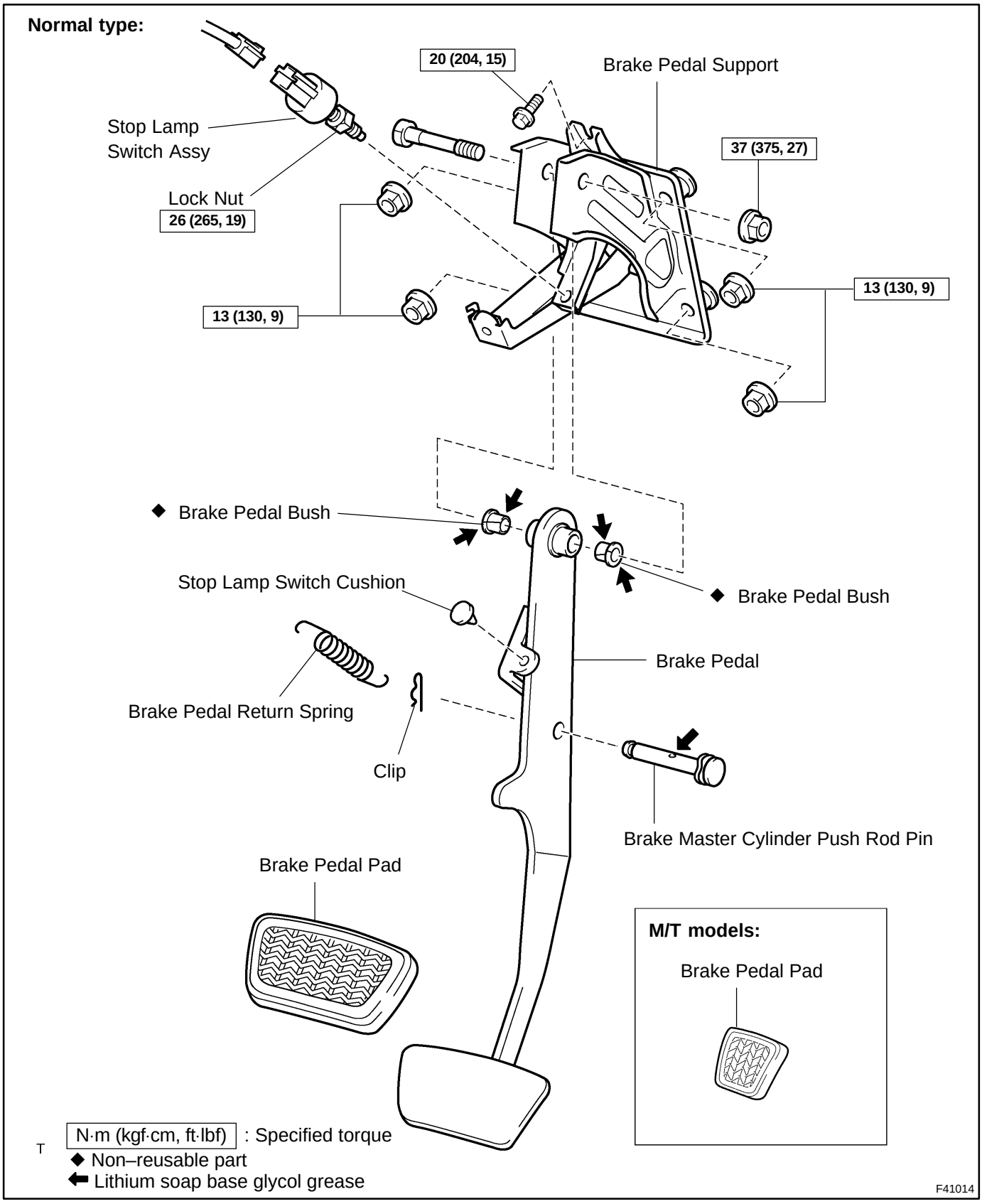

Link type:

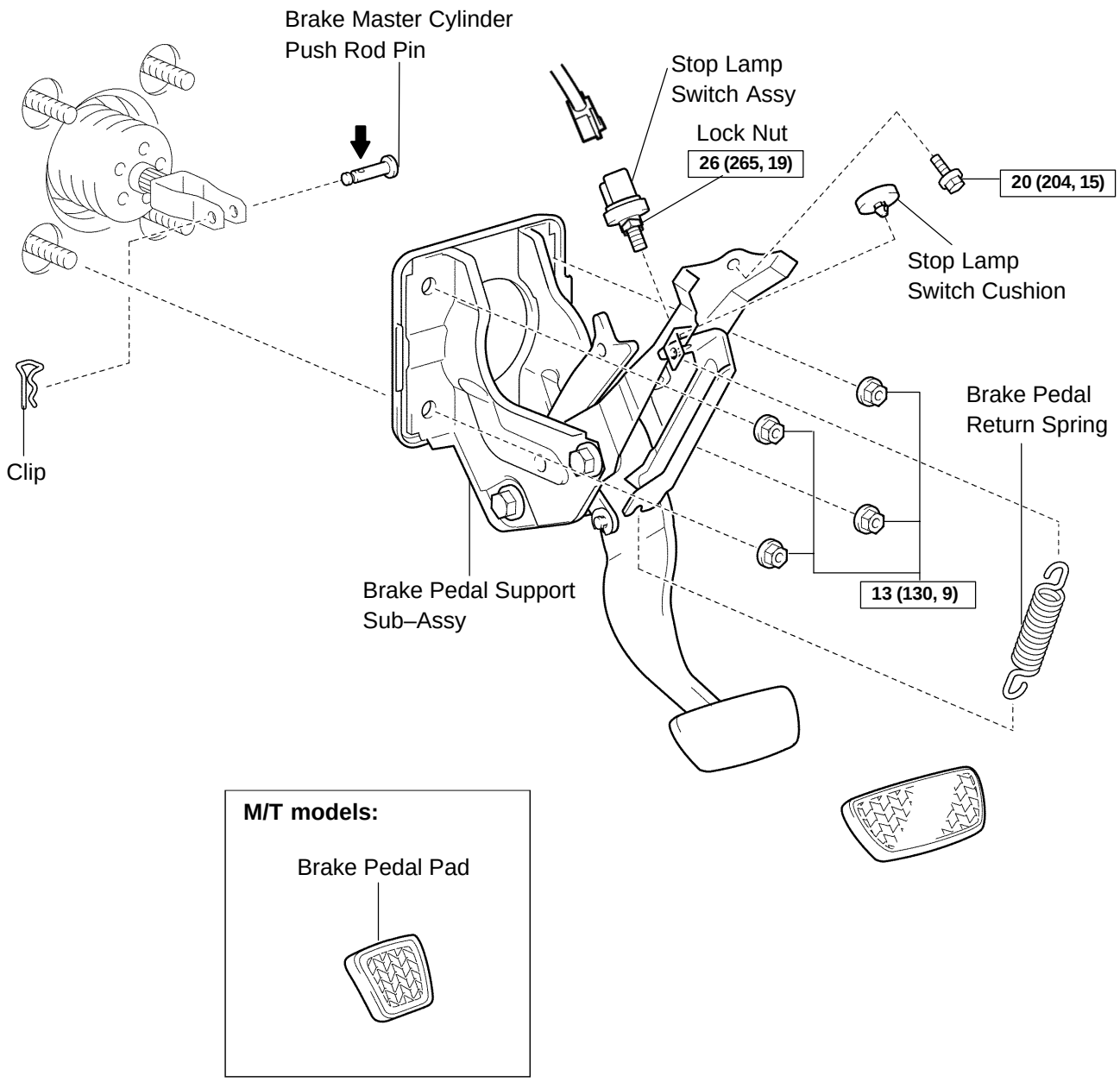

N·m (kgf·cm, ft·lbf) : Specified torque

P ⬅ Lithium soap base glycol grease

C86251

320CZ–01

OVERHAUL

HINT:

COMPONENTS: See page 32–8 and 71–7

1. REMOVE INSTRUMENT PANEL REINFORCEMENT
(See page 71–12)

2. REMOVE BRAKE PEDAL RETURN SPRING

3. REMOVE PUSH ROD PIN

(a) Remove the clip and push rod pin.

4. REMOVE BRAKE PEDAL SUPPORT ASSY

(a) Disconnect the stop lamp switch connector.
(b) Remove the bolt, 4 nuts and brake pedal support assy.

5. REMOVE STOP LAMP SWITCH ASSY

(a) Loosen the lock nut and remove the stop lamp switch.

6. REMOVE BRAKE PEDAL SUB–ASSY (NORMAL TYPE BRAKE PEDAL)

(a) Remove the nut, bolt and brake pedal sub–assy from brake pedal support sub–assy.

7. REMOVE BRAKE PEDAL PAD

8. REMOVE BRAKE PEDAL BUSH (NORMAL TYPE BRAKE PEDAL)

(a) Remove the 2 brake pedal bushes from brake pedal.

9. REMOVE STOP LAMP SWITCH CUSHION

10. INSTALL STOP LAMP SWITCH CUSHION

11. INSTALL BRAKE PEDAL BUSH (NORMAL TYPE BRAKE PEDAL)

(a) Install the new 2 brake pedal bushes to brake pedal.

HINT:

Apply the lithium soap base glycol grease to the parts indicates by arrows (See page 32–8).

12. INSTALL BRAKE PEDAL PAD

13. INSTALL BRAKE PEDAL SUB–ASSY (NORMAL TYPE BRAKE PEDAL)

(a) Install the brake pedal sub–assy with the bolt and nut.
Torque: 37 N·m (375 kgf·cm, 27 ft·lbf)

14. INSTALL STOP LAMP SWITCH ASSY

(a) Install the stop lamp switch with the lock nut.
Torque: 26 N·m (265 kgf·cm, 19 ft·lbf)

15. INSTALL BRAKE PEDAL SUPPORT ASSY

(a) Install the brake pedal support assy with the bolt and 4 nuts.
Torque:
Bolt: 20 N·m (204 kgf·cm, 15 ft·lbf)
Nut: 13 N·m (130 kgf·cm, 9 ft·lbf)

16. INSTALL PUSH ROD PIN

(a) Install the push rod pin and clip.

HINT:

Apply the lithium soap base glycol grease to the parts indicates by arrows (See page 32–8).

17. INSTALL BRAKE PEDAL RETURN SPRING

18. INSTALL INSTRUMENT PANEL REINFORCEMENT (See page 71–12)

19. CHECK AND ADJUST BRAKE PEDAL HEIGHT(See page 32–6)

20. CHECK PEDAL FREE PLAY(See page 32–6)

21. CHECK PEDAL RESERVE DISTANCE(See page 32–6)

BRAKE MASTER CYLINDER SUB–ASSY

320CT–01

OVERHAUL

1. DRAIN BRAKE FLUID

NOTICE:

Wash off the brake fluid immediately if it comes into contact with a painted surface.

2. REMOVE AIR CLEANER ASSY

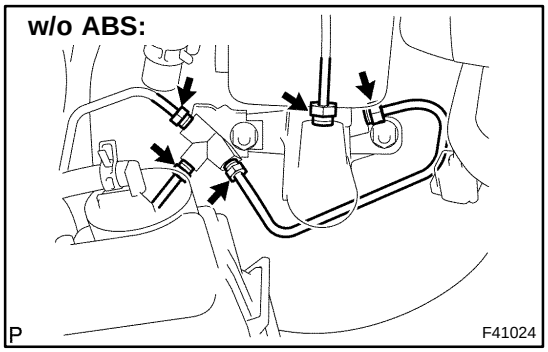

3. REMOVE BRAKE MASTER CYLINDER SUB–ASSY

(a) Disconnect the level warning switch connector.

(b) w/o ABS:
Using SST, disconnect the 5 brake tubes from the brake master cylinder.
SST 09023–00100

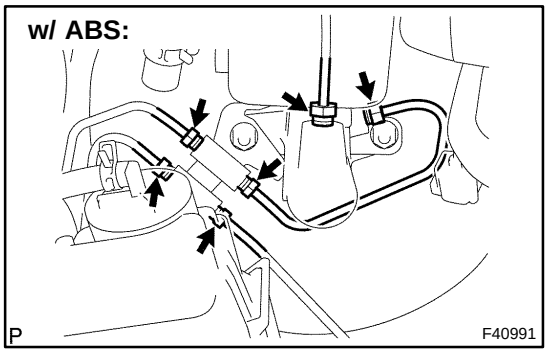

(c) w/ ABS:
Using SST, disconnect the 6 brake tubes from the brake master cylinder.
SST 09023–00100

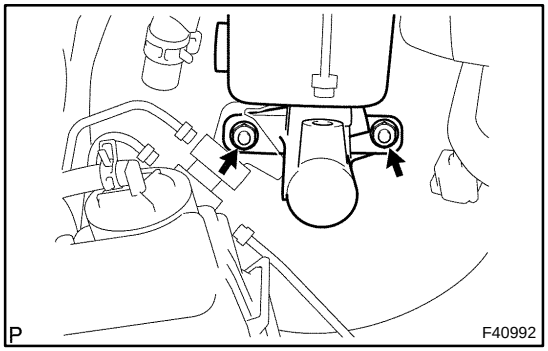

(d) w/o ABS:
Remove the 2 nuts, pull out the 3–way and brake master cylinder sub–assy.

(e) w/ ABS:
Remove the 2 nuts, pull out the 2–way and brake master cylinder sub–assy.

4. REMOVE BRAKE MASTER CYLINDER RESERVOIR FILLER CAP ASSY

(a) Pull out the master cylinder reservoir filler cap assy.

5. REMOVE BRAKE MASTER CYLINDER RESERVOIR STRAINER

(a) Pull out the master cylinder reservoir strainer.

6. REMOVE BRAKE MASTER CYLINDER RESERVOIR SUB–ASSY

(a) Remove the screw and pull out the master cylinder reservoir sub–assy.

7. REMOVE MASTER CYLINDER RESERVOIR GROMMET

(a) Remove the 2 master cylinder reservoir grommets.

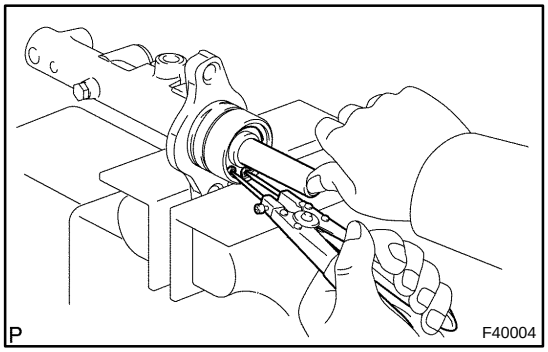

8. REMOVE BRAKE MASTER CYLINDER KIT(W/O VSC)

(a) Place master cylinder in vise.
(b) Remove the O–ring.
(c) Push in the piston and remove the snap ring with snap ring pliers.

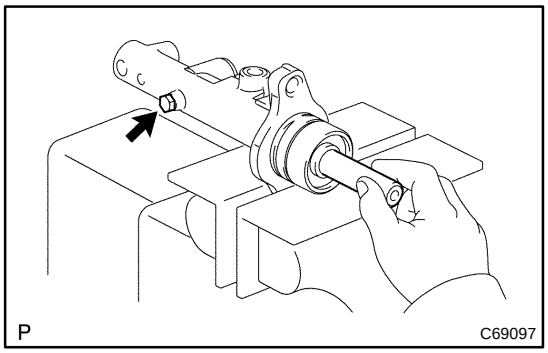

(d) Push in the piston and remove the piston stopper bolt and gasket.
(e) Remove the No.1 piston sub–assy, pulling straight out not at an angle.

NOTICE:
If pulled out at an angle, there is a possibility that the cylinder bore could be damaged.

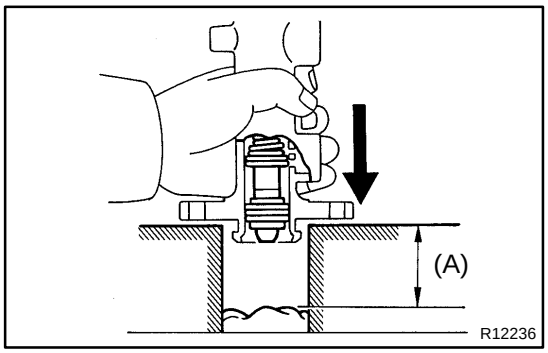

(f) Place a waste cloth and 2 wooden blocks on the work table and lightly edges until the No.2 piston sub–assy drops out of the cylinder.

HINT:
Make sure the distance (A) from the rag the top of the blocks is at least 100 mm (3.94 in.).

NOTICE:
If pulled out at an angle, there is a possibility that the cylinder bore could be damaged.

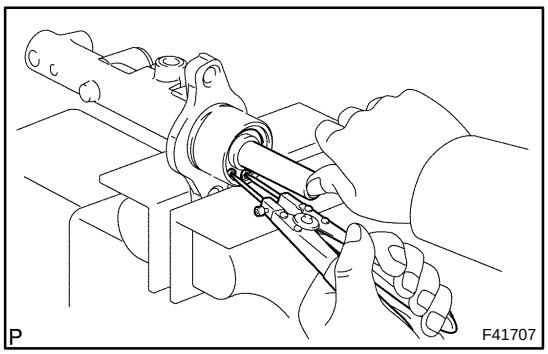

9. REMOVE BRAKE MASTER CYLINDER KIT(W/ VSC)

(a) Place master cylinder in vise.
(b) Remove the O–ring.
(c) Push in the piston and remove the snap ring with snap ring pliers.

NOTICE:
If pulled out at an angle, there is a possibility that the cylinder bore could be damaged.

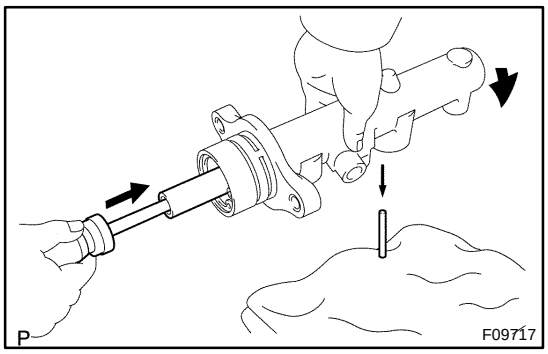

(d) Push in the piston with a screwdriver, and remove the straight pin by turning over the cylinder body.

HINT:

Tape the screwdriver tip before use.

(e) Remove the No.1 and No.2 piston sub–assy and 2 springs by hand, pulling straight out, not at an angle.

10. INSPECT MASTER CYLINDER BODY

(a) Check the cylinder bore for rust or scoring.

11. INSTALL BRAKE MASTER CYLINDER KIT(W/O VSC)

(a) Place master cylinder in vise.

(b) Apply the lithium soap base grycol grease on new No.1 and No.2 piston sub–assy.

(c) Install the No.2 and No.1 piston sub–assy.

NOTICE:

- **If the piston is inserted at an angle, there is a possibility that the cylinder bore could be damaged.**
- **Be careful not to damage the rubber lips on the pistons.**

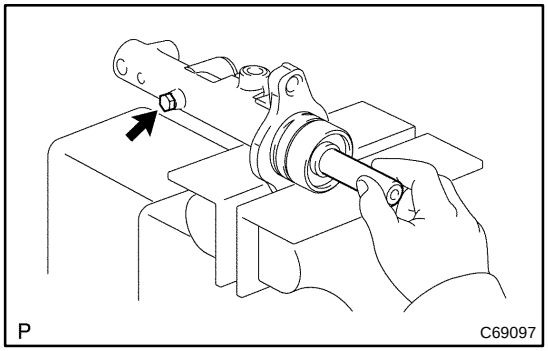

(d) Push in the piston and install a new gasket and a new piston stopper bolt.

Torque: 10 N·m (100 kgf·cm, 7 ft·lbf)

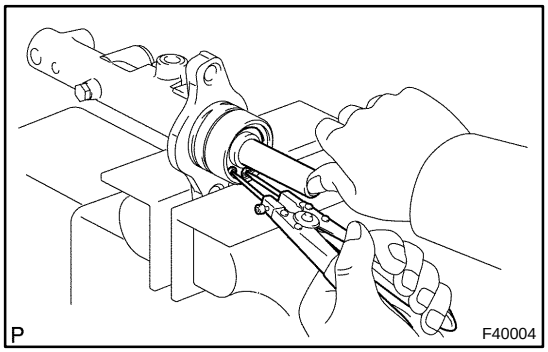

(e) Push in the piston and install the snap ring with snap ring pliers.

(f) Apply the lithium soap base grycol grease on a new O–ring and install the O–ring to the master cylinder.

12. INSTALL BRAKE MASTER CYLINDER KIT(W/ VSC)

(a) Place master cylinder in vise.
(b) Apply the lithium soap base glycol grease on new No.1 and No.2 piston sub–assy.
(c) Install the No.2 and No.1 piston sub–assy.

NOTICE:

- **If the piston is inserted at an angle, there is a possibility that the cylinder bore could be damaged.**
- **Be careful not to damage the rubber lips on the pistons.**

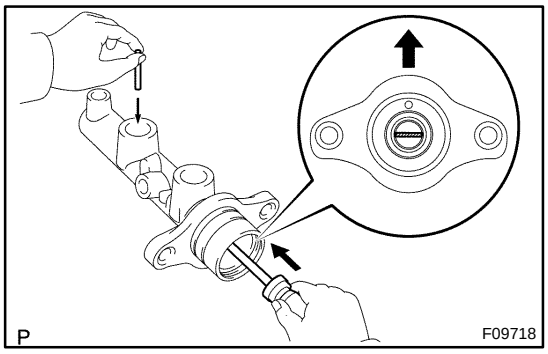

(d) Install the straight pin.

HINT:

Insert the No.2 piston with the groove positioning horizontally.

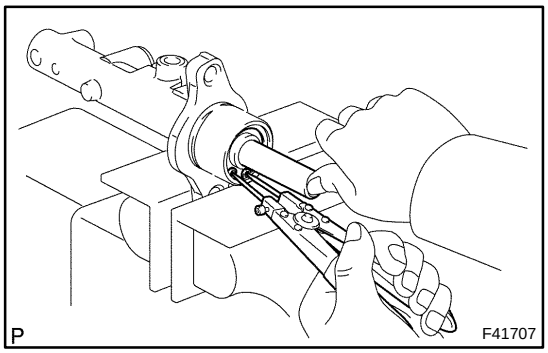

(e) Push in the piston and install the snap ring with snap ring pliers.
(f) Apply the lithium soap base glycol grease on a new O–ring and install the O–ring to the master cylinder.

13. INSTALL MASTER CYLINDER RESERVOIR GROMMET

(a) Apply the lithium soap base glycol grease on the 2 master cylinder reservoir grommets.
(b) Install the 2 master cylinder reservoir grommets to the master cylinder reservoir sub–assy.

14. INSTALL BRAKE MASTER CYLINDER RESERVOIR SUB–ASSY

(a) Install the master cylinder reservoir sub–assy to the master cylinder with the screw.

15. INSTALL BRAKE MASTER CYLINDER RESERVOIR STRAINER

(a) Install the brake master cylinder reservoir strainer.

16. INSTALL BRAKE MASTER CYLINDER RESERVOIR FILLER CAP ASSY

(a) Install the brake master cylinder reservoir filler cap assy.

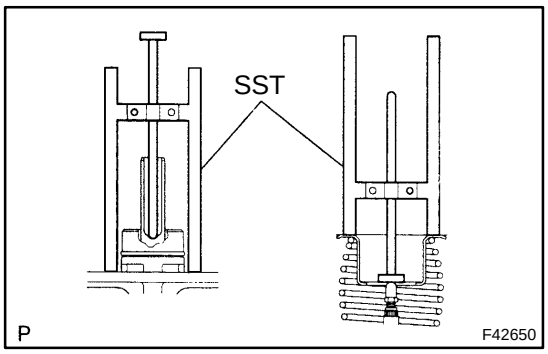

17. INSPECT AND ADJUST BRAKE BOOSTER PUSH ROD

(a) Apply SST to the master cylinder.
SST 09737–00011

(b) Set SST, on the master cylinder, lower the pin of the SST until it slightly touches the piston.

(c) Apply the chalk to the flat surfaced tip of the SST pin.

(d) Turn SST upside down and place it clearance between the brake booster and SST.
Clearance: 0 mm (0 in.)

HINT:

- If there is a clearance between the SST main body and the booster shell. It means that the specified value, and no chalk attachment on the booster push rod means that it is more than the specified value.
- Brake booster push rod clearance before shipment is adjusted to be ± 0.105 mm (± 0.004 in.).

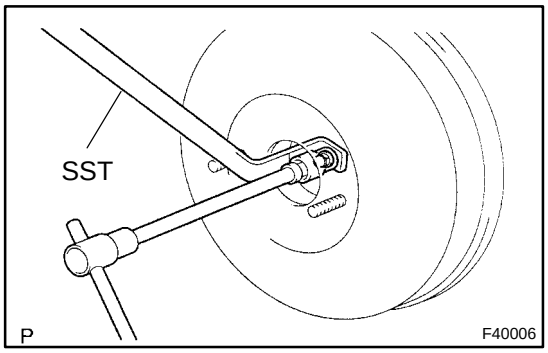

(e) Using SST, adjust the booster push rod length until the push rod lightly touches the pin head.
SST 09737–00020

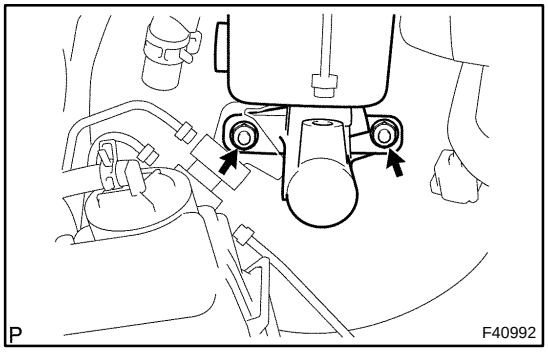

18. INSTALL BRAKE MASTER CYLINDER SUB–ASSY

(a) w/o ABS:
Install the master cylinder sub–assy and 3–way with the 2 nuts.
Torque: 13 N·m (130 kgf·cm, 9 ft·lbf)

(b) w/ ABS:
Install the master cylinder sub–assy and 2–way with the 2 nuts.
Torque: 13 N·m (130 kgf·cm, 9 ft·lbf)

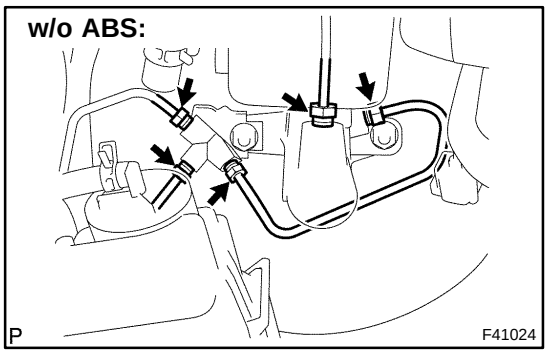

(c) w/o ABS:
Using SST and connect the 5 brake tubes to the master cylinder sub–assy.
Torque: 15 N·m (155 kgf·cm, 11 ft·lbf)
SST 09023–00100

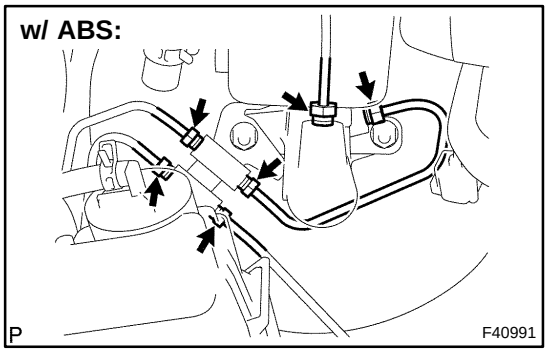

(d) w/ ABS:
Using SST and connect the 6 brake tubes to the master cylinder sub–assy.
Torque: 15 N·m (155 kgf·cm, 11 ft·lbf)
SST 09023–00100

(e) Connect the level warning switch connector.

19. FILL RESERVOIR WITH BRAKE FLUID
20. BLEED MASTER CYLINDER(See page 32–4)
SST 09023–00100
21. BLEED BRAKE LINE(See page 32–4)
22. INSTALL AIR CLEANER ASSY

23. CHECK FLUID LEVEL IN RESERVOIR
24. CHECK BRAKE FLUID LEAKAGE

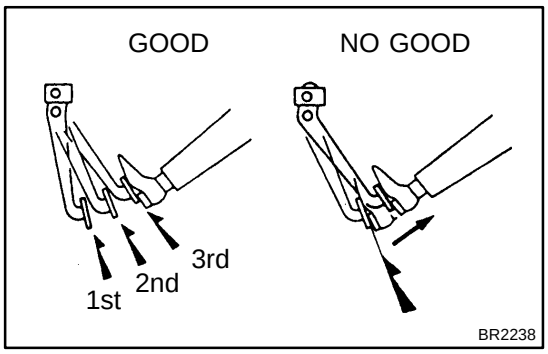

BRAKE BOOSTER ASSY

320CU–01

ON–VEHICLE INSPECTION

1. INSPECT BRAKE BOOSTER

(a) Air tightness check.

(1) Start the engine and stop it after 1 or 2 minutes. Depress the brake pedal several times slowly.

HINT:

If the pedal goes down farthest the 1st time, but gradually rises after the 2nd or 3rd time, the booster is air tight.

(2) Depress the brake pedal while the engine is running, and stop the engine with the pedal depressed.

HINT:

If there is no change in the pedal reserve distance after holding the pedal for 30 seconds, the booster is air–tight.

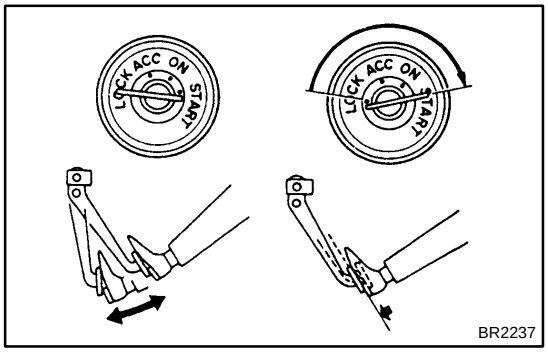

(b) Operating check.

(1) Depress the brake pedal several times with the ignition switch OFF and check that there is no change in the pedal reserve distance.

(2) Depress the brake pedal and start the engine.

HINT:

If the pedal goes down slightly, operation is normal.

2. INSPECT VACUUM CHECK VALVE

(a) Check vacuum check valve.

(1) Slide the clip and disconnect the vacuum hose.

(2) Remove the vacuum check valve.

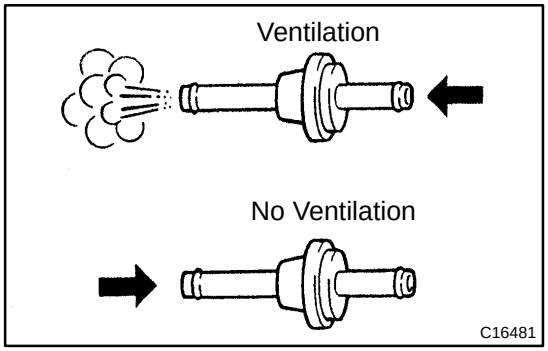

(3) Check that there is ventilation from the booster to engine, and no ventilation from the engine to the booster.

(4) If any fault is found, replace the vacuum check valve.

320CV–01

COMPONENTS

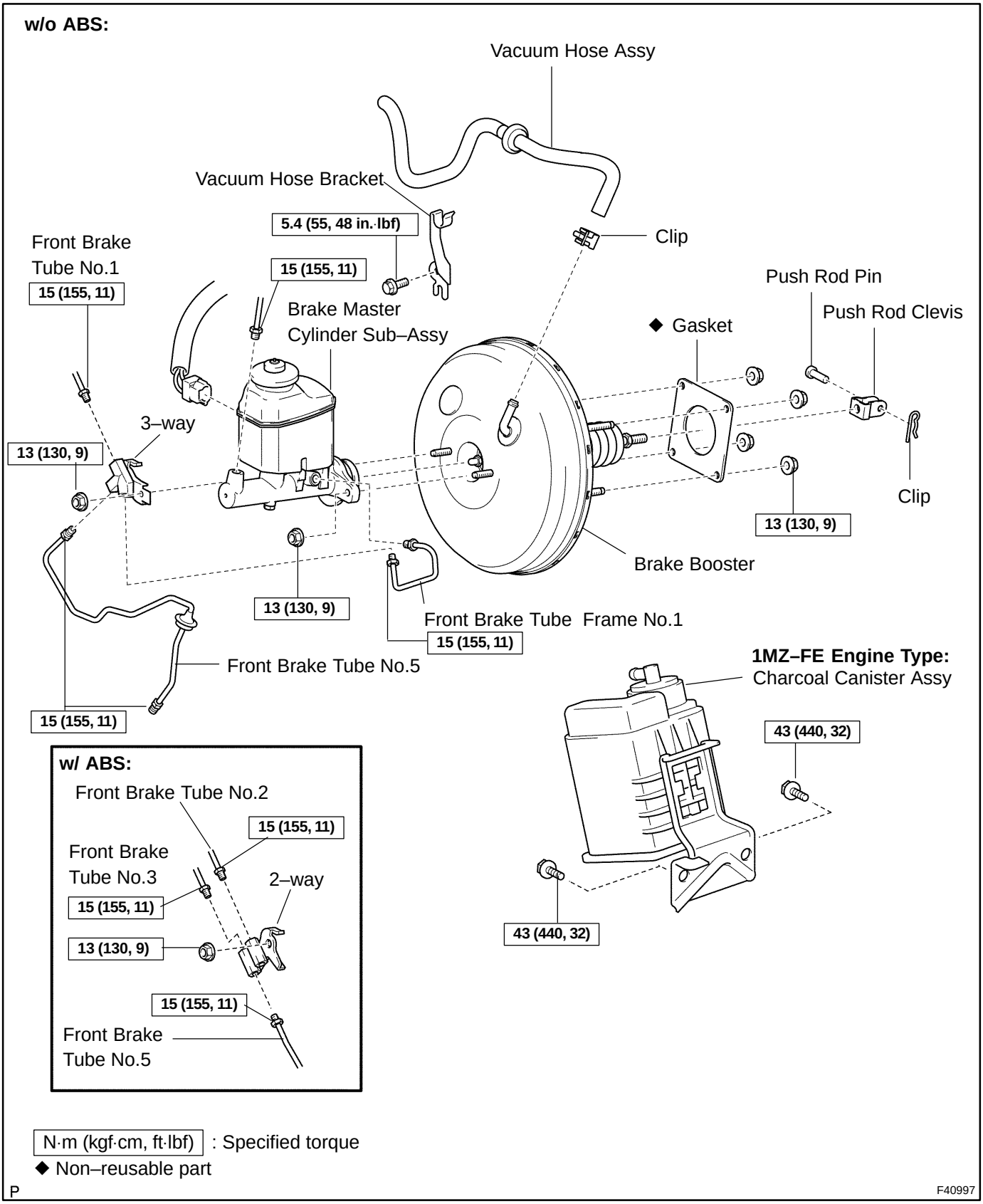

320CW–01

REPLACEMENT

HINT:

COMPONENTS: See page 71–7 and 32–19

1. DRAIN BRAKE FLUID

NOTICE:

Wash off the brake fluid immediately if it comes into contact with a painted surface.

2. REMOVE AIR CLEANER ASSY

3. REMOVE BRAKE MASTER CYLINDER SUB–ASSY
(See page 32–12)
SST 09023–00100

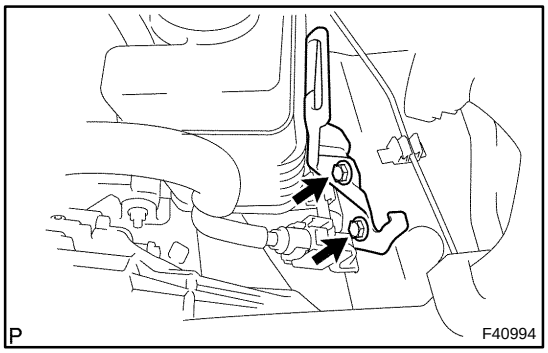

4. SEPARATE CHARCOAL CANISTER ASSY(1MZ–FE ENGINE TYPE)

(a) Remove the 2 bolts and separate the charcoal canister from the body.

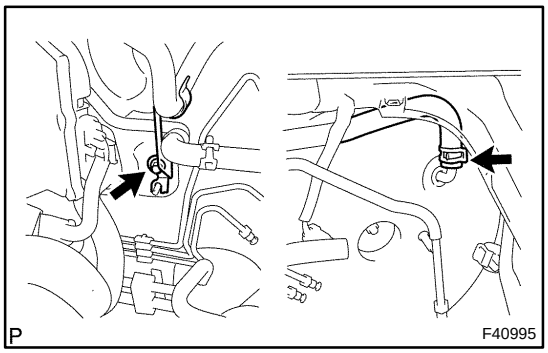

5. DISCONNECT VACUUM HOSE ASSY

(a) Remove the bolt and separate the vacuum hose from the vacuum hose bracket.

(b) Slide the clip and disconnect the vacuum hose from the brake booster.

6. REMOVE FRONT DOOR SCUFF PLATE LH
(See page 71–12)

7. REMOVE COWL SIDE TRIM SUB–ASSY LH
(See page 71–12)

8. REMOVE INSTRUMENT PANEL SUB–ASSY UPPER
(See page 71–12)

9. REMOVE INSTRUMENT PNL INSERT SUB–ASSY LWR LH
(See page 71–12)

10. REMOVE PUSH ROD PIN

(a) Remove the clip and push rod pin.

11. REMOVE BRAKE MASTER CYLINDER PUSH ROD CLEVIS

(a) Loosen the lock nut and remove the push rod clevis.

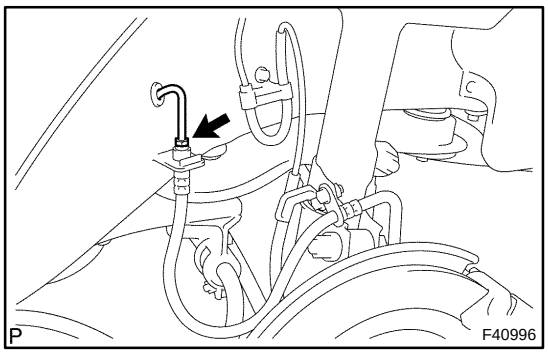

12. REMOVE FRONT BRAKE TUBE NO.5

(a) Using SST and remove the front brake tube No.5.
SST 09023–00100

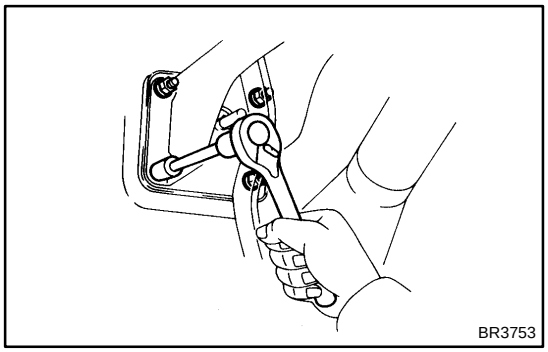

13. REMOVE BRAKE BOOSTER ASSY

(a) Remove the 4 nuts and clevis.
(b) Pull out the brake booster assy.

14. REMOVE BRAKE BOOSTER GASKET

15. INSTALL BRAKE BOOSTER GASKET

(a) Install a new brake booster gasket to the brake booster.

16. INSTALL BRAKE BOOSTER ASSY

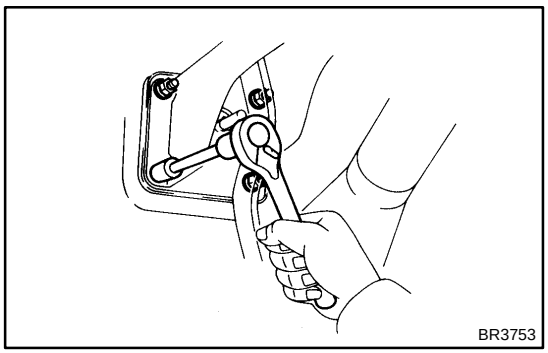

(a) Install the brake booster with the 4 nuts.
Torque: 13 N·m (130 kgf·cm, 9 ft·lbf)

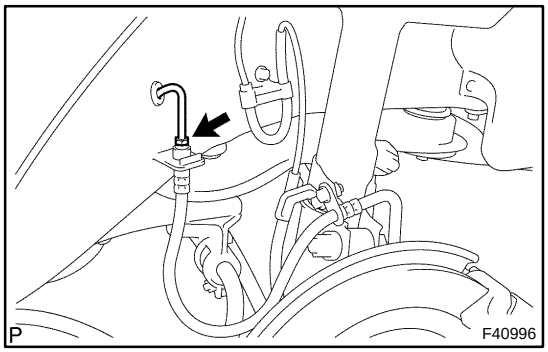

17. INSTALL FRONT BRAKE TUBE NO.5

(a) Using SST and install the front brake tube No.5.
Torque: 15 N·m (155 kgf·cm, 11 ft·lbf)
SST 09023–00100

18. INSTALL BRAKE MASTER CYLINDER PUSH ROD CLEVIS

(a) Install the push rod clevis and lock nut.

19. INSTALL PUSH ROD PIN

(a) Install the push rod pin and clip.

HINT:

Apply the lithium soap base glycol grease to the part indicate by arrow (See page 32–8).

20. INSTALL INSTRUMENT PNL INSERT SUB–ASSY LWR LH
(See page 71–12)

21. INSTALL INSTRUMENT PANEL SUB–ASSY UPPER
(See page 71–12)

22. INSTALL COWL SIDE TRIM SUB–ASSY LH
(See page 71–12)

23. INSTALL FRONT DOOR SCUFF PLATE LH
(See page 71–12)

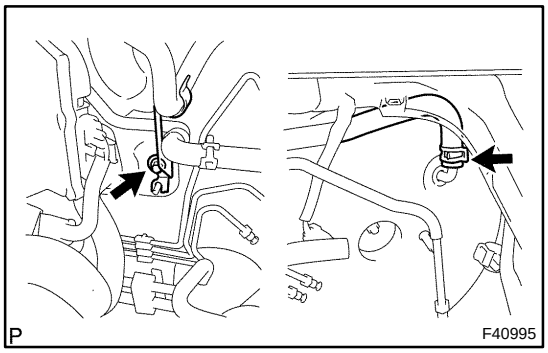

24. INSTALL VACUUM HOSE ASSY

(a) Install the vacuum hose and vacuum hose bracket to the body with a bolt.
Torque: 5.4 N·m (55 kgf·cm, 48 in.·lbf)

(b) Connect the vacuum hose to the brake booster with the clip.

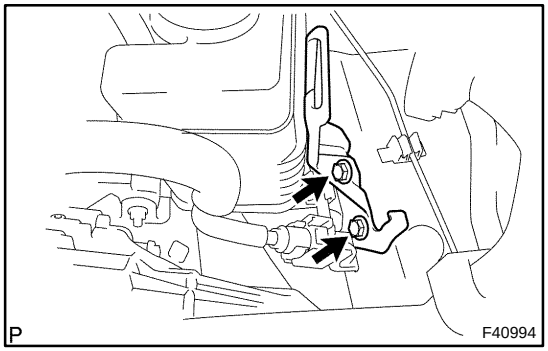

25. CONNECT CHARCOAL CANISTER ASSY(1MZ–FE ENGINE TYPE)

(a) Install the charcoal canister with the 2 bolts.
Torque: 43 N·m (440 kgf·cm, 32 in.·lbf)

26. INSTALL BRAKE MASTER CYLINDER SUB–ASSY
(See page 32–12)
SST 09023–00100

27. INSTALL AIR CLEANER ASSY

28. FILL RESERVOIR WITH BRAKE FLUID

29. BLEED MASTER CYLINDER(See page 32–4)
SST 09023–00100

30. BLEED BRAKE LINE(See page 32–4)

31. CHECK FLUID LEVEL IN RESERVOIR

32. CHECK BRAKE FLUID LEAKAGE

33. CHECK AND ADJUST BRAKE PEDAL HEIGHT(See page 32–6)

FRONT BRAKE

320D0–01

COMPONENTS

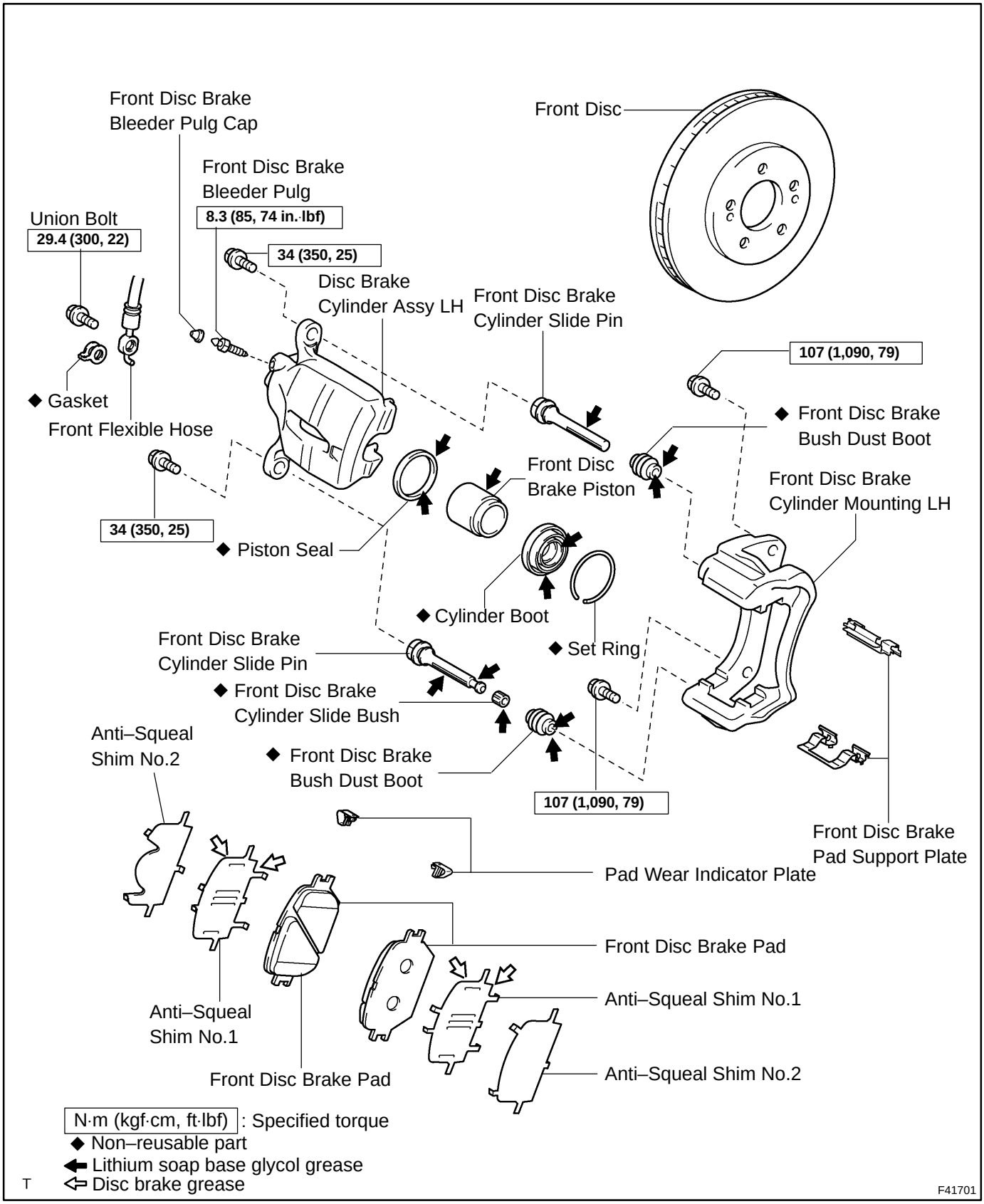

OVERHAUL

HINT:

- COMPONENTS: See page 32–24
- Overhaul the RH side by the same procedures with LH side.

1. REMOVE FRONT WHEEL

2. DRAIN BRAKE FLUID

NOTICE:

Wash off the brake fluid immediately if it comes into contact with a painted surface.

3. DISCONNECT FRONT FLEXIBLE HOSE

(a) Remove the union bolt and a gasket from the disc brake cylinder, then disconnect the flexible hose from the disc brake cylinder.

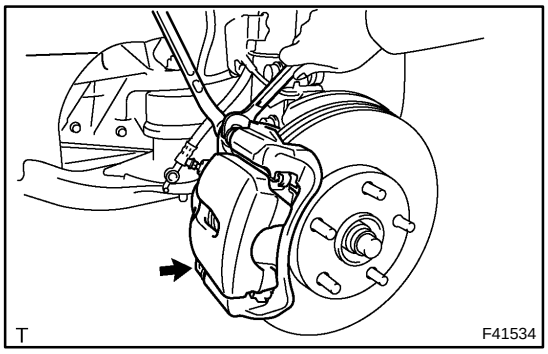

4. REMOVE DISC BRAKE CYLINDER ASSY FR LH

(a) Remove the 2 bolts and disc brake cylinder.

5. REMOVE DISC BRAKE PAD KIT FRONT (PAD ONLY)

(a) Remove the 2 brake pads with anti–squeal shim.

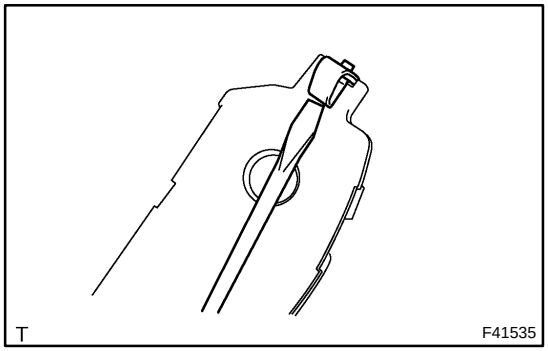

6. REMOVE ANTI SQUEAL SHIM KIT FRONT

(a) Remove the 2 anti–squeal shims from each of 2 brake pads.

(b) Using a screwdriver, remove the wear indicator from each of 2 brake pads.

7. REMOVE FRONT DISC BRAKE PAD SUPPORT PLATE

(a) Remove the upper side front disc brake pad support plate.

8. REMOVE FRONT DISC BRAKE PAD SUPPORT PLATE

(a) Remove the bottom side front disc brake pad support plate.

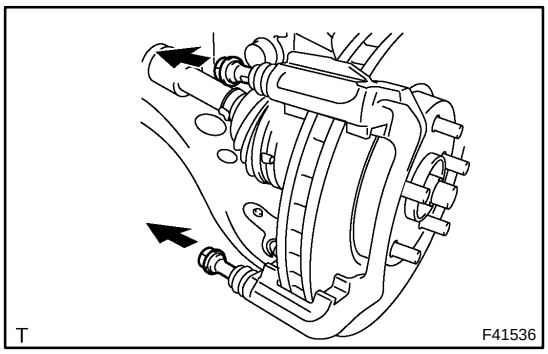

9. REMOVE FRONT DISC BRAKE CYLINDER SLIDE PIN

(a) Remove the 2 cylinder slide pins from the disc brake cylinder mounting.

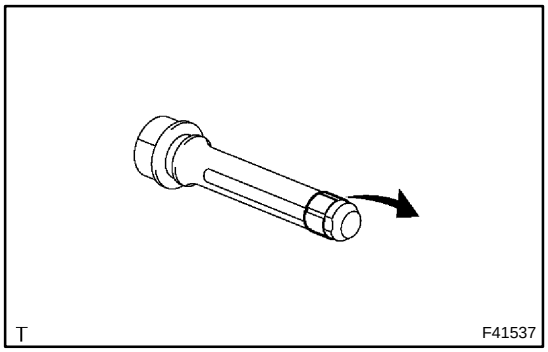

10. REMOVE FRONT DISC BRAKE CYLINDER SLIDE BUSH

(a) Remove the cylinder slide bush from the cylinder slide pin.

11. REMOVE FRONT DISC BRAKE BUSH DUST BOOT

(a) Remove the 2 bush dust boots from the disc brake cylinder mounting.

12. REMOVE FRONT DISC BRAKE CYLINDER MOUNTING LH

(a) Remove the 2 bolts and disc brake cylinder mounting LH.

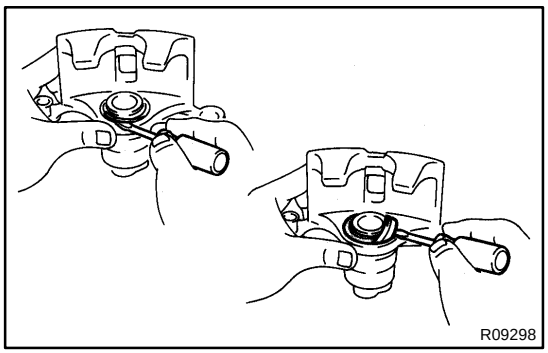

13. REMOVE CYLINDER BOOT

(a) Using a screwdriver, remove the set ring and cylinder boot.

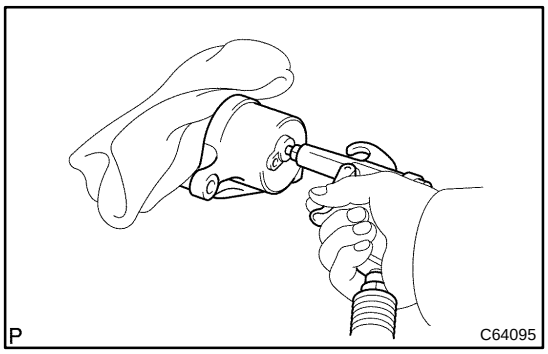

14. REMOVE FRONT DISC BRAKE PISTON

(a) Place a piece of cloth or similar, between the piston and the disc brake cylinder.
(b) Use compressed air to remove the piston from the disc brake cylinder.

CAUTION:
Do not place your fingers in front of the piston when using compressed air.
NOTICE:
Do not spatter the brake fluid.

15. REMOVE PISTON SEAL

(a) Using a screwdriver, remove the piston seal from the disc brake cylinder.

NOTICE:
Do not damage the inner cylinder and the cylinder groove.

16. REMOVE FRONT DISC BRAKE BLEEDER PLUG CAP

17. REMOVE FRONT DISC BRAKE BLEEDER PLUG

18. INSPECT BRAKE CYLINDER AND PISTON

(a) Check the cylinder bore and piston for rust or scoring.

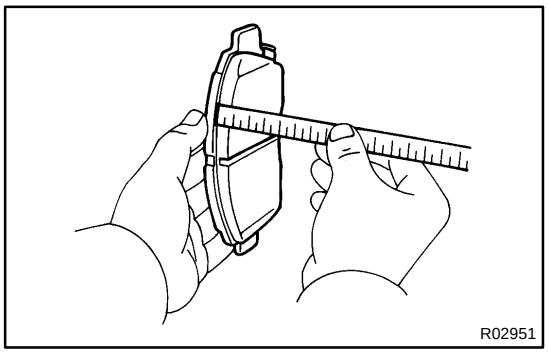

19. INSPECT PAD LINING THICKNESS

(a) Using a ruler, measure the pad lining thickness.
Standard thickness: 12.0 mm (0.472 in.)
Minimum thickness: 1.0 mm (0.039 in.)

20. INSPECT FRONT DISC BRAKE PAD SUPPORT PLATE

(a) Make sure that they have sufficient rebound, no deformation cracks or wear, and have had all rust and dirt cleaned off.

21. INSPECT FRONT DISC BRAKE PAD SUPPORT PLATE

(a) Make sure that they have sufficient rebound, no deformation cracks or wear, and have had all rust and dirt cleaned off.

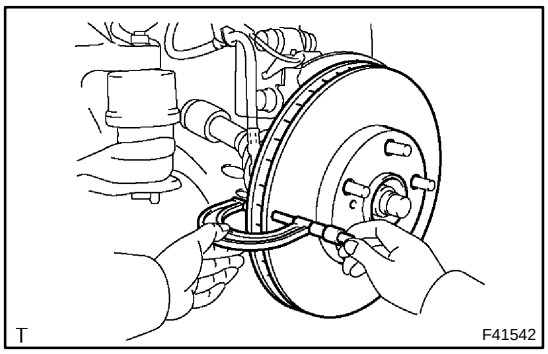

22. INSPECT DISC THICKNESS

(a) Using a micrometer, measure the disc thickness.
Standard thickness: 28.0 mm (0.433 in.)
Minimum thickness: 26.0 mm (0.039 in.)

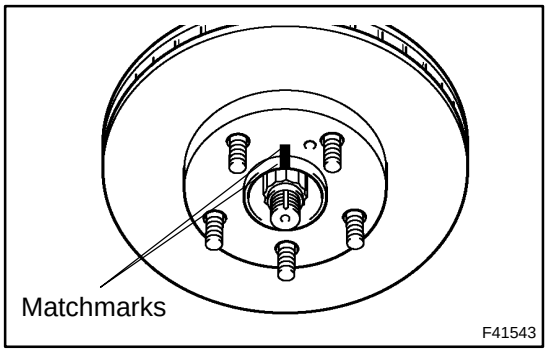

23. REMOVE FRONT DISC

(a) Put matchmarks on the disc and the axle hub.
(b) Remove the disc.

24. INSTALL FRONT DISC

(a) Aligning the matchmarks, install the front disc.
HINT:
When replacing the disc with new one, select the installation position where the disc has the minimum runout.

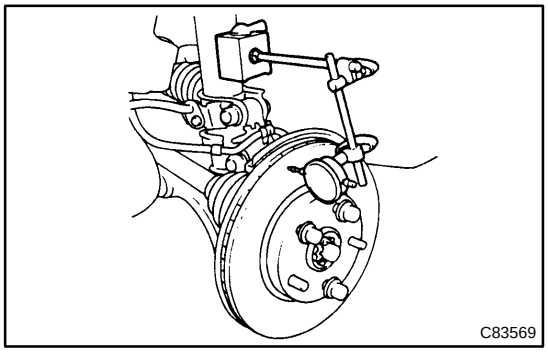

25. INSPECT DISC RUNOUT

(a) Temporarily fasten the disc with hub nuts.
Torque: 103 N·m (1,050 kgf·cm, 76 ft·lbf)
(b) Using a dial indicator, measure the disc runout 10 mm (0.39 in.) away from the outer edge of the disc.
Maximum disc runout: 0.05 mm (0.0020 in.)
(c) If the disc's runout is maximum value or greater, check the bearing play in the axial direction and check the axle hub runout (See page 30–2). If the bearing play and axle hub runout are not abnormal, adjust the disc runout or grind it on a "On–car" brake lathe.

26. TEMPORARY TIGHTEN FRONT DISC BRAKE BLEEDER PLUG

(a) Temporarily tighten the bleeder plug to the disc brake cylinder.

27. INSTALL FRONT DISC BRAKE BLEEDER PLUG CAP

28. INSTALL PISTON SEAL

(a) Apply the lithium soap base glycol grease on a new piston seal.
(b) Install the piston seal to the disc brake cylinder.

29. INSTALL FRONT DISC BRAKE PISTON

(a) Apply the lithium soap base glycol grease on the piston.
(b) Install the piston to the disc brake cylinder.

NOTICE:
Do not screw the piston forcedly in the disc brake cylinder.

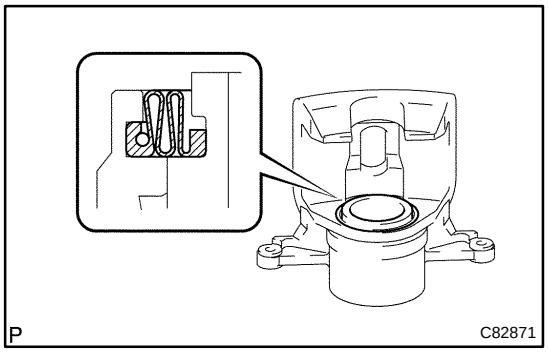

30. INSTALL CYLINDER BOOT

(a) Apply the lithium soap base glycol grease on a new cylinder boot. Install the cylinder boot to the disc brake cylinder.

HINT:
Install the boot securely to the grooves of the cylinder and piston.

(b) Using a screwdriver, install the set ring.

NOTICE:
Do not damage the cylinder boot.

31. INSTALL FRONT DISC BRAKE CYLINDER MOUNTING LH

(a) Install the disc brake cylinder mounting LH with the 2 bolts.
Torque: 107 N·m (1,090 kgf·cm, 79 ft·lbf)

32. INSTALL FRONT DISC BRAKE BUSH DUST BOOT

(a) Apply the lithium soap base glycol grease to seal surface of 2 new bush dust boots.
(b) Install the 2 bush dust boots to the disc brake cylinder mounting.

33. INSTALL FRONT DISC BRAKE CYLINDER SLIDE BUSH

(a) Apply the lithium soap base glycol grease to a new cylinder slide bush.
(b) Install the cylinder slide bush to the cylinder slide pin.

34. INSTALL FRONT DISC BRAKE CYLINDER SLIDE PIN

(a) Apply the lithium soap base glycol grease to the sliding part and the seal surface of the 2 cylinder slide pins.
(b) Install the 2 cylinder slide pins to the disc brake cylinder mounting.

HINT:
Place with the bush side facing down.

35. INSTALL FRONT DISC BRAKE PAD SUPPORT PLATE

(a) Install the upper side front disc brake pad support plate.

36. INSTALL FRONT DISC BRAKE PAD SUPPORT PLATE

(a) Install the bottom side front disc brake pad support plate.

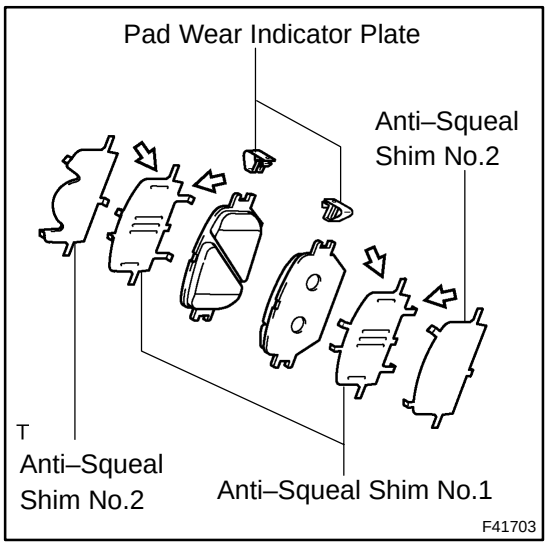

37. INSTALL ANTI SQUEAL SHIM KIT FRONT

NOTICE:

- **When replacing worn pads, the anti–squeal shims must be replaced together with the pads.**
- **Install the shims and pad wear indicator plates correctly of which positions and directions.**

(a) Apply disc brake grease to inside of each anti–squeal shim No.1.
(b) Install the anti–squeal shim No.1 and No.2 on each pad.
(c) Install the pad wear indicator plate to the 2 pads.

38. INSTALL DISC BRAKE PAD KIT FRONT (PAD ONLY)

(a) Install the 2 pads with the pad wear indicator plate facing upward.

NOTICE:

There should be no oil or grease adhering to the friction surfaces of the pads and the disc.

39. INSTALL DISC BRAKE CYLINDER ASSY FR LH

(a) Install the disc brake cylinder with the 2 bolts.
Torque: 34 N·m (350 kgf·cm, 25 ft·lbf)

40. CONNECT FRONT FLEXIBLE HOSE

(a) Install a new gasket and flexible hose with the union bolt.
Torque: 29.4 N·m (300 kgf·cm, 22 ft·lbf)

HINT:

- Gasket has 2 types: 2–piece type and 1–piece type.
- Install the flexible hose lock securely in the lock hole in the disc brake cylinder.

41. FILL RESERVOIR WITH BRAKE FLUID

42. BLEED MASTER CYLINDER(See page 32–4)
SST 09023–00100

43. BLEED BRAKE LINE(See page 32–4)

44. CHECK FLUID LEVEL IN RESERVOIR

45. CHECK BRAKE FLUID LEAKAGE

46. INSTALL FRONT WHEEL
Torque: 103 N·m (1,050 kgf·cm, 76 ft·lbf)

REAR DISC BRAKE

COMPONENTS

320D2–01

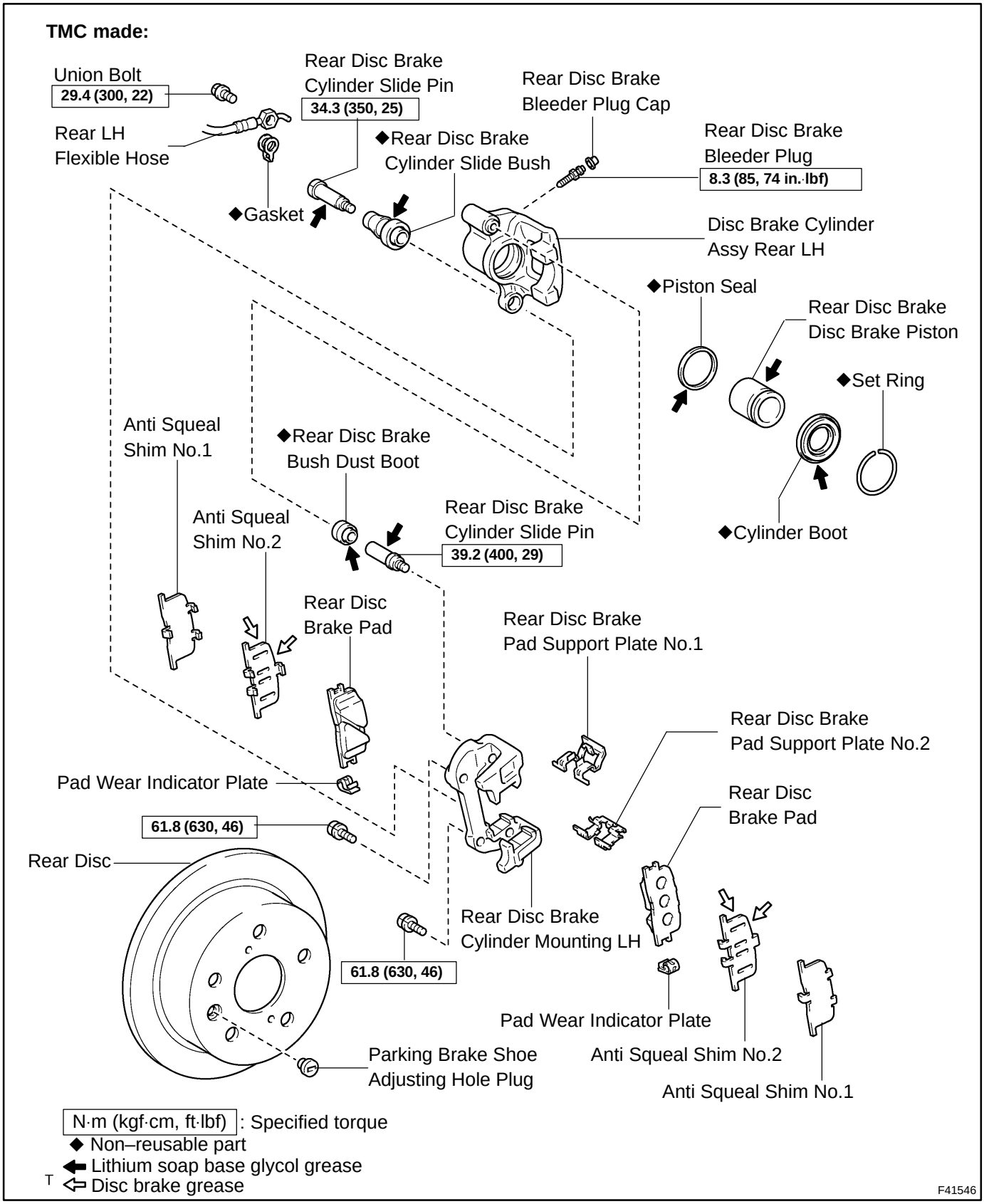

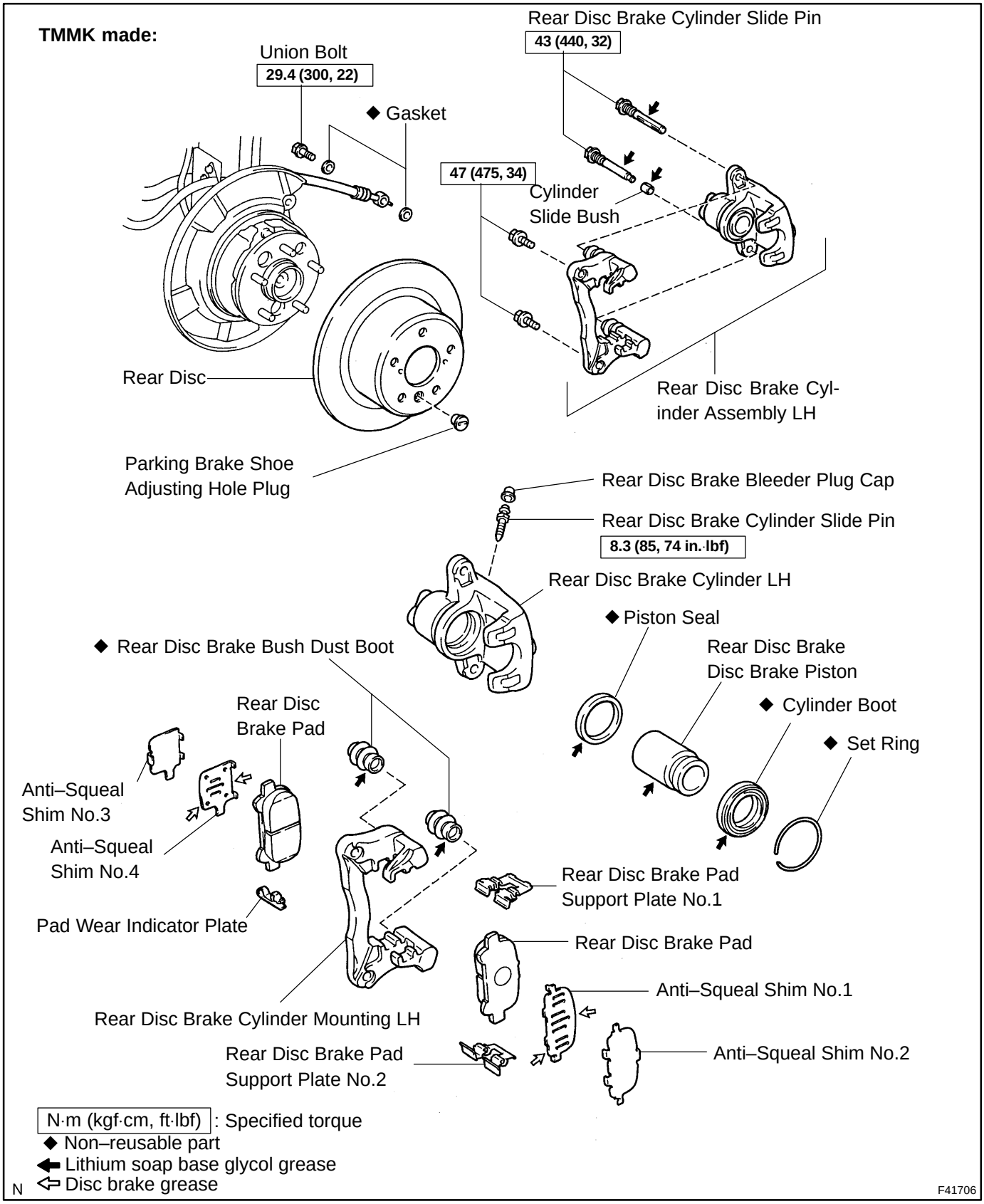
TMMK made:
Rear Disc Brake Cylinder Slide Pin
43 (440, 32)
Union Bolt
29.4 (300, 22)
◆ Gasket
47 (475, 34)
Cylinder Slide Bush
Rear Disc
Rear Disc Brake Cylinder Assembly LH
Parking Brake Shoe Adjusting Hole Plug
Rear Disc Brake Bleeder Plug Cap
Rear Disc Brake Cylinder Slide Pin
8.3 (85, 74 in.·lbf)
Rear Disc Brake Cylinder LH
◆ Piston Seal
◆ Rear Disc Brake Bush Dust Boot
Rear Disc Brake Disc Brake Piston
◆ Cylinder Boot
◆ Set Ring
Rear Disc Brake Pad
Anti–Squeal Shim No.3
Anti–Squeal Shim No.4
Rear Disc Brake Pad Support Plate No.1
Pad Wear Indicator Plate
Rear Disc Brake Pad
Anti–Squeal Shim No.1
Rear Disc Brake Cylinder Mounting LH
Rear Disc Brake Pad Support Plate No.2
Anti–Squeal Shim No.2
N·m (kgf·cm, ft·lbf) : Specified torque
◆ Non–reusable part
Lithium soap base glycol grease
Disc brake grease
N
F41706

OVERHAUL

HINT:

- COMPONENTS: See page 32–31
- Overhaul the RH side by the same procedures with LH side.
- Two types of brake pad exist; one is with slit and the other without slit.

1. REMOVE REAR WHEEL

2. DRAIN BRAKE FLUID

NOTICE:

Wash off the brake fluid immediately if it comes into contact with a painted surface.

3. DISCONNECT REAR LH FLEXIBLE HOSE

(a) Remove the union bolt and a gasket from the disc brake cylinder, then disconnect the flexible hose from the disc brake cylinder.

HINT:

Gasket has 2 types: 2–piece type and 1–piece type.

4. REMOVE REAR DISC BRAKE CYLINDER SLIDE PIN

(a) TMC made:
Remove the cylinder slide pin.

(b) TMMK made:
Remove the cylinder slide pin and cylinder slide bush.

5. REMOVE DISC BRAKE CYLINDER ASSY RR LH

(a) TMC made:
Lift up the disc brake cylinder and remove the disc brake cylinder.

(b) TMMK made:
Remove the cylinder slide pin and disc brake cylinder.

6. REMOVE DISC BRAKE PAD KIT REAR (PAD ONLY)

(a) Remove the 2 brake pads with the anti–squeal shim.

7. REMOVE REAR DISC BRAKE ANTI SQUEAL SHIM KIT

(a) Remove the 2 anti–squeal shims and pad wear indicator from each of 2 brake pads.

(b) TMC made:
Remove the 2 pad wear indicator plates from each of 2 brake pads.

(c) TMMK made:
Remove the pad wear indicator plate from inner pad.

8. REMOVE REAR DISC BRAKE PAD SUPPORT PLATE

(a) Remove the rear disc brake pad support plate No.1.

9. REMOVE REAR DISC BRAKE PAD SUPPORT PLATE

(a) Remove the rear disc brake pad support plate No.2.

10. REMOVE REAR DISC BRAKE BUSH DUST BOOT

(a) TMC made:
Remove the rear disc brake bush dust boot.

(b) TMMK made:
Remove the 2 rear disc brake bush dust boots.

11. REMOVE REAR DISC BRAKE CYLINDER MOUNTING LH

(a) TMC made:
Using a hexagon wrench (ϕ8 mm), remove the cylinder slide pin.
(b) Remove the 2 bolts and cylinder mounting LH.

12. REMOVE CYLINDER BOOT

(a) Using a screwdriver, remove the set ring and disc cylinder boot.

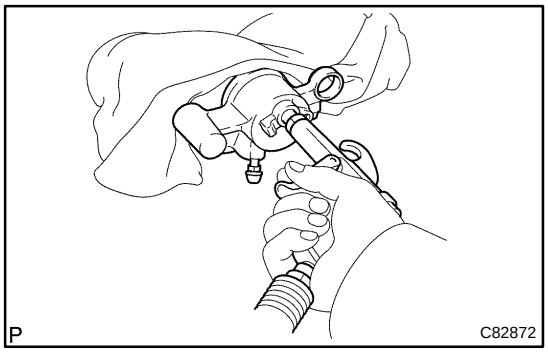

13. REMOVE REAR DISC BRAKE DISC BRAKE PISTON

(a) Place a piece of cloth or similar, between the piston and the disc brake cylinder.
(b) Use compressed air to remove the piston from the disc brake cylinder.

CAUTION:
Do not place your fingers in front of the piston when using compressed air.
NOTICE:
Do not spatter the brake fluid.

14. REMOVE PISTON SEAL

(a) Using a screwdriver, remove the piston seal from the brake cylinder.

NOTICE:
Do not damage the inner cylinder and the cylinder groove.

15. REMOVE REAR DISC BRAKE BLEEDER PLUG CAP

16. REMOVE REAR DISC BRAKE BLEEDER PLUG

17. INSPECT BRAKE CYLINDER AND PISTON

(a) Check the cylinder bore and piston for rust or scoring.

18. INSPECT PAD LINING THICKNESS

(a) Using a ruler, measure the pad lining thickness.
Standard thickness: 10.0 mm (0.472 in.)
Minimum thickness: 1.0 mm (0.039 in.)

19. INSPECT REAR DISC BRAKE PAD SUPPORT PLATE

(a) Make sure that they have sufficient rebound, no deformation cracks or wear, and have had all rust and dirt cleaned off.

20. INSPECT REAR DISC BRAKE PAD SUPPORT PLATE

(a) Make sure that they have sufficient rebound, no deformation cracks or wear, and have had all rust and dirt and cleaned off.

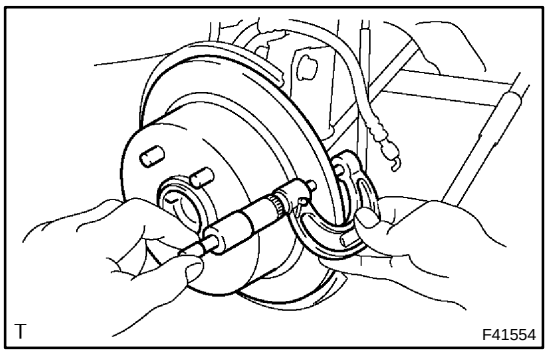

21. INSPECT DISC THICKNESS

(a) Using a micrometer, measure the disc thickness.
Standard thickness: 12.0 mm (0.472 in.)
Minimum thickness: 10.5 mm (0.413 in.)

22. REMOVE PARKING BRAKE SHOE ADJUSTING HOLE PLUG

23. REMOVE REAR DISC

(a) Put matchmarks on the disc and the axle hub.
(b) Remove the disc.

24. INSTALL REAR DISC

(a) Aligning the matchmarks, install the rear disc.

HINT:

When replacing the disc with new one, select the installation position where the disc has the minimum runout.

25. INSTALL PARKING BRAKE SHOE ADJUSTING HOLE PLUG

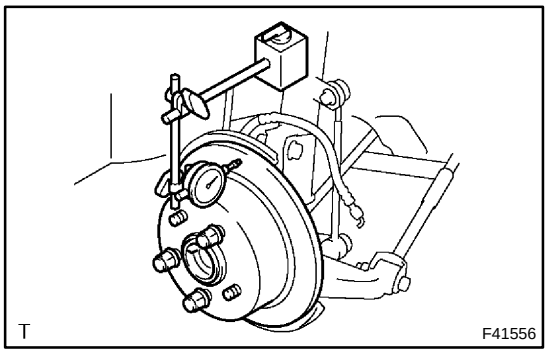

26. INSPECT DISC RUNOUT

(a) Temporarily fasten the disc with hub nuts.
Torque: 103 N·m (1,050 kgf·cm, 76 ft·lbf)
(b) Using dial indicator, measure the disc runout 10 mm (0.39 in.) away from the outer edge of the disc.
Maximum disc runout: 0.15 mm (0.0059 in.)
(c) If the disc's runout is maximum value or greater, check the bearing play in the axial direction and check the axle hub runout. (See page 30–2)If the bearing play and axle hub runout are not abnormal, adjust the disc runout or grind it on a "On–car" brake lathe.

27. ADJUST PARKING BRAKE SHOE CLEARANCE(See page 33–21)

28. TEMPORARY TIGHTEN REAR DISC BRAKE BLEEDER PLUG

(a) Temporarily tighten the bleeder plug to the disc brake cylinder.

29. INSTALL REAR DISC BRAKE BLEEDER PLUG CAP

30. INSTALL PISTON SEAL

(a) Apply the lithium soap base glycol grease on a new piston seal.
(b) Install the piston seal to the disc brake cylinder.

31. INSTALL REAR DISC BRAKE DISC BRAKE PISTON

(a) Apply the lithium soap base glycol grease on the piston.
(b) Install the piston to the disc brake cylinder.

NOTICE:
Do not screw the piston forcedly in the disc brake cylinder.

32. INSTALL CYLINDER BOOT

(a) Apply the lithium soap base glycol grease on a new cylinder boot.
(b) Install the cylinder boot to the disc brake cylinder.

HINT:
Install the boot securely to the grooves of the cylinder and piston.

(c) Using a screwdriver, install a new set ring.

NOTICE:
Do not damage the cylinder boot.

33. INSTALL REAR DISC BRAKE CYLINDER MOUNTING LH

(a) Install the cylinder mounting LH with the 2 bolts.
Torque:
TMC made: 61.8 N·m (630 kgf·cm, 46 ft·lbf)
TMMK made: 47 N·m (475 kgf·cm, 34 ft·lbf)

34. INSTALL REAR DISC BRAKE CYLINDER SLIDE PIN

(a) TMC made:
Using a hexagon wrench (8 mm), install the cylinder slide pin.
Torque: 39.2 N·m (400 kgf·cm, 29 ft·lbf)
(b) TMMK made:
Install the cylinder slide pin with the cylinder slide bush.
Torque: 43 N·m (440 kgf·cm, 32 ft·lbf)

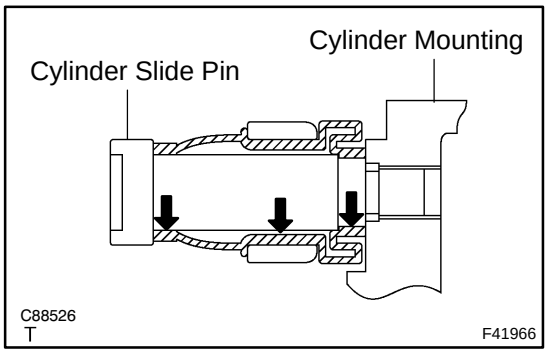

35. INSTALL REAR DISC BRAKE CYLINDER SLIDE BUSH(TMC MADE)

(a) Apply the lithium soap base glycol grease on a new cylinder slide bush.
(b) Install the cylinder slide bush to the disc brake cylinder assy.

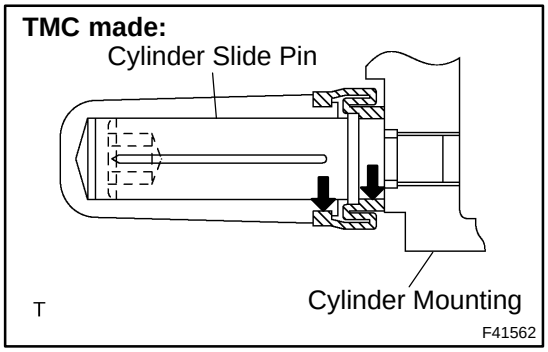

36. INSTALL REAR DISC BRAKE BUSH DUST BOOT

(a) TMC made:
Install the rear disc brake bush dust boot.
(1) Apply the lithium soap base glycol grease to seal surface of a new bush dust boot.
(2) Install the bush dust boot to the cylinder slide pin.
(b) TMMK made:
Install the rear disc brake bush dust boot.
(1) Apply the lithium soap base glycol grease to seal surface of a 2 new bush dust boots.
(2) Install the 2 bush dust boots to the each cylinder slide pin.

37. INSTALL REAR DISC BRAKE PAD SUPPORT PLATE

(a) Install the rear disc brake pad support plate No.1.

38. INSTALL REAR DISC BRAKE PAD SUPPORT PLATE

(a) Install the rear disc brake pad support plate No.2.

39. INSTALL REAR DISC BRAKE ANTI SQUEAL SHIM KIT

(a) Coat the both sides of No.1 anti–squeal shim with pad grease all over, and install the shim together with No.2 anti–squeal shim to each pad.

(b) TMC made:
Install the 2 pad wear indicator plates to the each of 2 brake pads.

NOTICE:
When replacing worn pads, the anti–squeal shims must be replaced together with the pads.

(c) TMMK made:
Install the pad wear indicator plate to the inner pad.

NOTICE:
When replacing worn pads, the anti–squeal shims must be replaced together with the pads.

40. INSTALL DISC BRAKE PAD KIT REAR (PAD ONLY)

(a) Install the 2 brake pads with the anti–squeal shim.

NOTICE:
There should be no oil or grease on to the friction surface of the pads and the disc.

41. INSTALL DISC BRAKE CYLINDER ASSY RR LH(TMC MADE)

(a) Apply the lithium soap base glycol grease to the cylinder slide pin.

(b) Install the disc brake cylinder assembly rear LH to the cylinder slide pin.

42. INSTALL REAR DISC BRAKE CYLINDER SLIDE PIN

(a) Apply the lithium soap base glycol grease to the cylinder slide pin.

(b) Install and torque the cylinder slide pin to the disc brake cylinder assembly.
Torque:
TMC made: 34.3 N·m (350 kgf·cm, 25 ft·lbf)
TMMK made: 43 N·m (440 kgf·cm, 32 ft·lbf)

43. CONNECT REAR LH FLEXIBLE HOSE

(a) Connect a new gasket and flexible hose with the union bolt.
Torque: 29.4 N·m (300 kgf·cm, 22 ft·lbf)

44. FILL RESERVOIR WITH BRAKE FLUID

45. BLEED MASTER CYLINDER(See page 32–4)
SST 09023–00100

46. BLEED BRAKE LINE(See page 32–4)

47. CHECK FLUID LEVEL IN RESERVOIR

48. CHECK BRAKE FLUID LEAKAGE

49. INSTALL REAR WHEEL
Torque: 103 N·m (1,050 kgf·cm, 76 ft·lbf)

REAR DRUM BRAKE

COMPONENTS

320D4–01

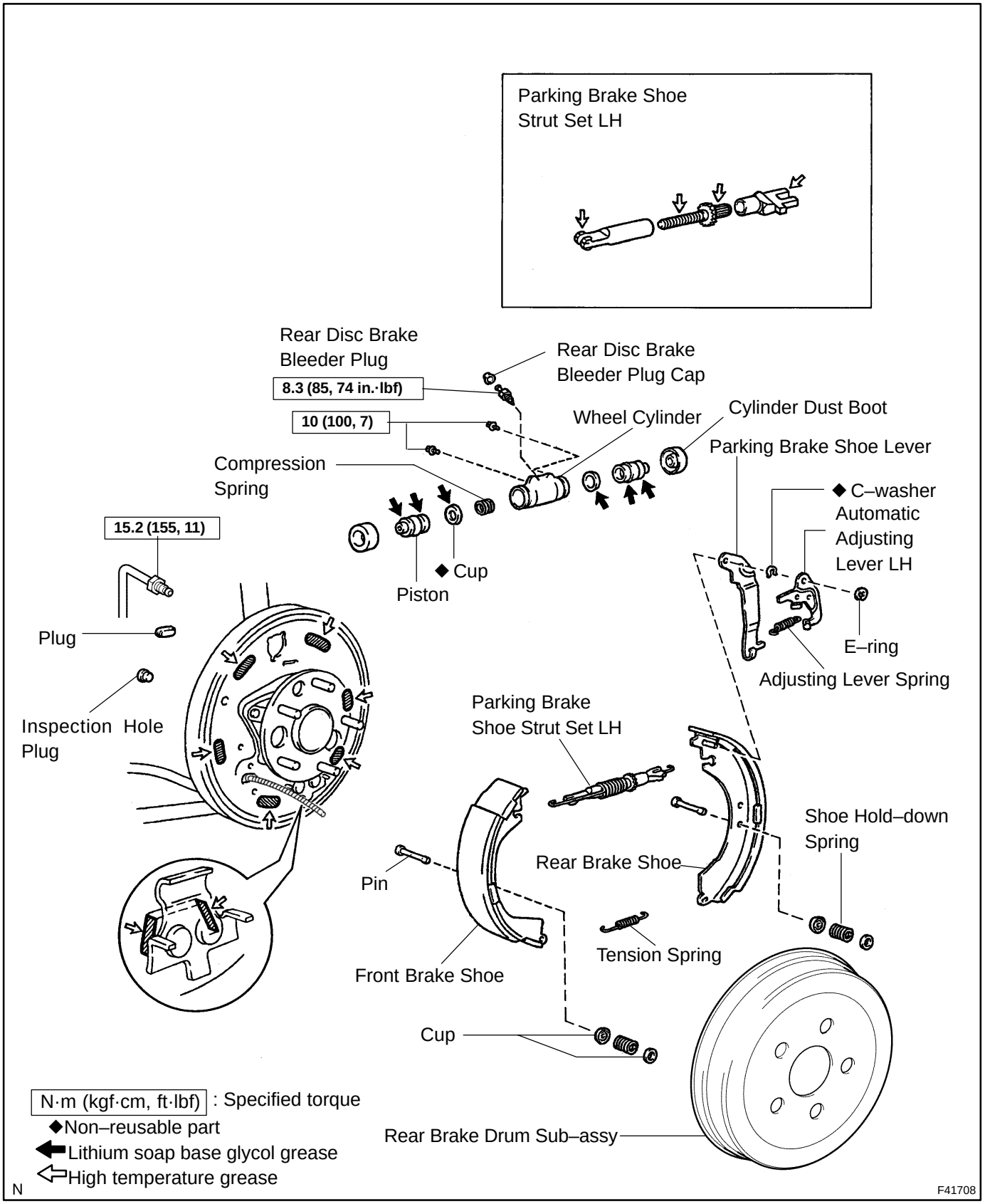

OVERHAUL

HINT:

- COMPONENTS: See page 32–38
- Overhaul the RH side by the same procedures with LH side.

1. REMOVE REAR WHEEL

2. DRAIN BRAKE FLUID

NOTICE:

Wash off the brake fluid immediately if it comes into contact with a painted surface.

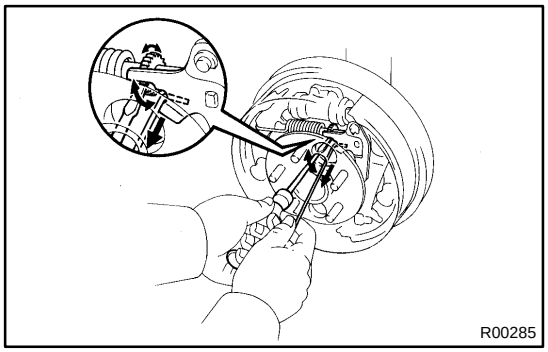

3. REMOVE REAR BRAKE DRUM SUB–ASSY

HINT:

If the brake drum cannot be removed easily, do the following steps.

(a) Insert a bent wire or equivalent through the hole in the brake drum, and hold the automatic adjusting lever away from the adjuster.

(b) Using a screwdriver, reduce the brake shoe adjustment by turning the adjuster.

(c) Remove the rear brake drum sub–assy.

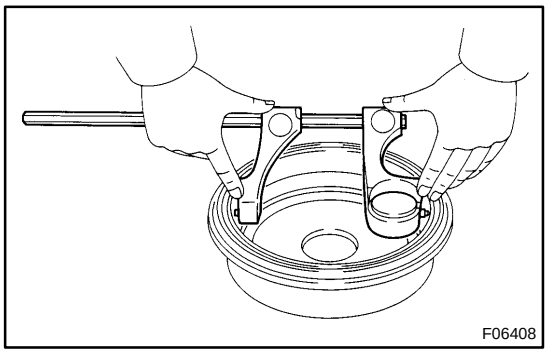

4. INSPECT BRAKE DRUM INSIDE DIAMETER

(a) Using a brake drum gauge or equivalent, measure the inside diameter of the drum.

Standard inside diameter: 228.0 mm (8.976 in.)

Maximum inside diameter: 230.6 mm (9.079 in.)

5. REMOVE TENSION SPRING

(a) Remove the tension spring from the front brake shoe and rear brake shoe.

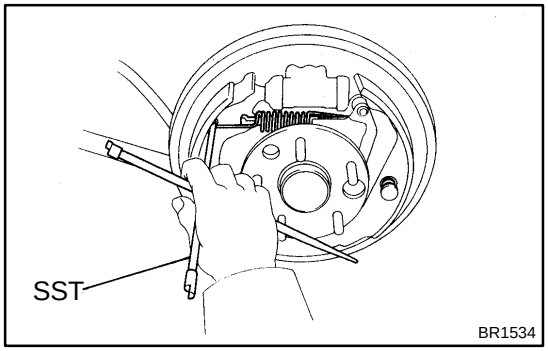

6. SEPARATE PARKING BRAKE SHOE STRUT SET LH

(a) Using SST, disconnect the shoe return spring and separate the parking brake shoe strut set LH.

SST 09703–30010

NOTICE:

Do not damage the wheel cylinder boot.

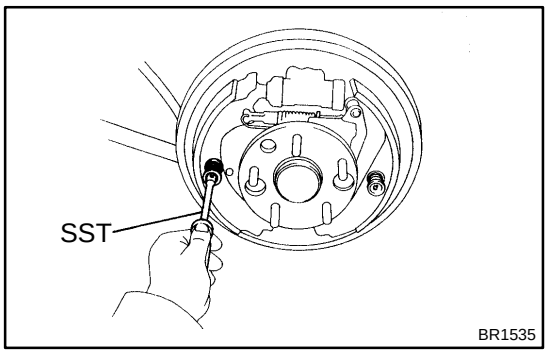

7. REMOVE FRONT BRAKE SHOE

(a) Using SST, remove the 2 cups, shoe hold–down spring and pin.
SST 09718–00010

(b) Remove the front brake shoe.

8. REMOVE PARKING BRAKE SHOE STRUT SET LH

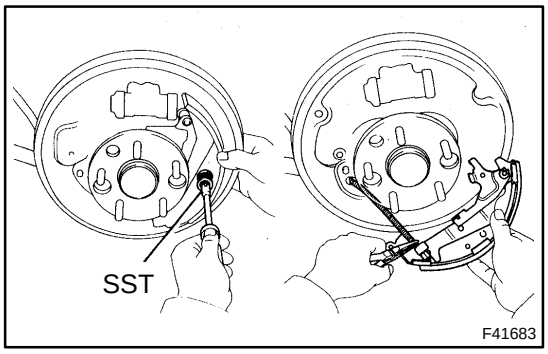

9. REMOVE REAR BRAKE SHOE

(a) Using SST, remove the 2 cups, shoe hold–down spring and pin.
SST 09718–00010

(b) Using a screwdriver, disconnect the parking brake cable from the anchor plate.

(c) Using needle–nose pliers, disconnect the parking brake cable from the lever and remove the rear shoe.

NOTICE:

Do not allow oil or grease on the rubbing face.

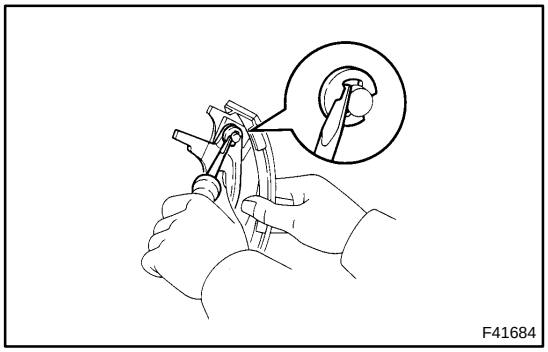

10. REMOVE REAR BRAKE AUTOMATIC ADJUST LEVER LH

(a) Remove the adjusting lever spring.

(b) Remove the E–ring.

(c) Remove the automatic adjusting lever.

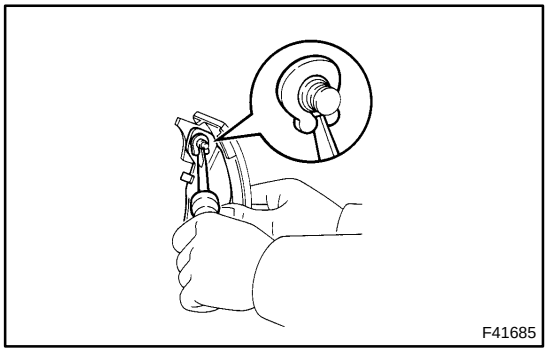

11. REMOVE PARKING BRAKE SHOE LEVER LH

(a) Using screwdriver, remove the C–washer and parking brake shoe lever.

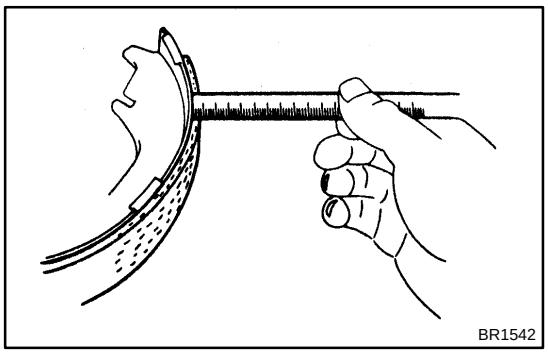

12. INSPECT REAR DRUM BRAKE SHOE LINING THICKNESS

(a) Using a ruler, measure the shoe lining thickness.
Standard thickness: 5.0 mm (0.197 in.)
Minimum thickness: 1.0 mm (0.039 in.)

If the thickness is less than the minimum, or shows signs of uneven wear, replace the brake shoes.

HINT:

If any of the brake shoes have to be replaced, replace all of the rear brake shoes in order to maintain even braking.

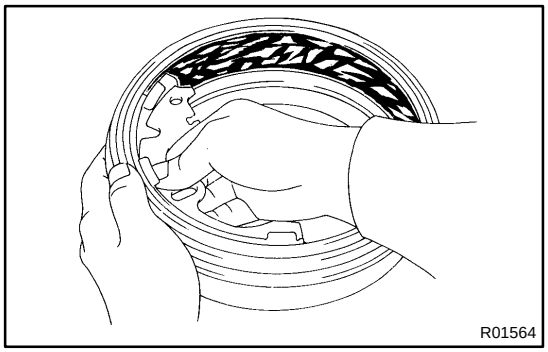

13. INSPECT BRAKE DRUM AND REAR DRUM BRAKE SHOE LINING FOR PROPER CONTACT

(a) Apply chalk to the inside surface of the drum, then grind drum the brake shoe lining to fit.

If the contact between the drum and the shoe lining is improper, repair it using a brake shoe grinder or replace the brake shoe assembly.

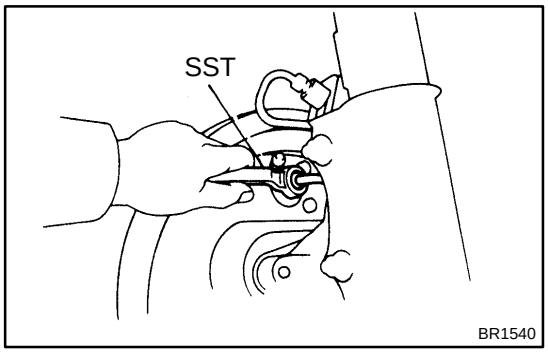

14. REMOVE LH, FRONT OR UPPER REAR WHEEL BRAKE CYLINDER ASSY

(a) Using SST, disconnect the brake tube, use a container to catch brake fluid.
SST 09751–36011

(b) Remove the 2 bolts and wheel cylinder.

15. REMOVE REAR WHEEL CYLINDER CUP KIT

(a) Remove the 2 cylinder dust boots from the wheel cylinder.
(b) Remove the 2 pistons and compression spring.
(c) Remove the 2 cups from the each piston.

16. INSPECT BRAKE WHEEL CYLINDER

(a) Check the cylinder bore and piston for rust or scoring.

17. REMOVE REAR DISC BRAKE BLEEDER PLUG CAP

18. REMOVE REAR DISC BRAKE BLEEDER PLUG

19. TEMPORARY TIGHTEN REAR DISC BRAKE BLEEDER PLUG

20. INSTALL REAR DISC BRAKE BLEEDER PLUG CAP

21. INSTALL REAR WHEEL CYLINDER CUP KIT

(a) Apply the lithium soap base glycol grease to the parts indicates by arrows (See page 32–38).
(b) Install the 2 wheel cylinder cups to each piston.
(c) Install the compression spring and 2 pistons to the wheel cylinder.
(d) Install are 2 new cylinder dust boots to the wheel cylinder.

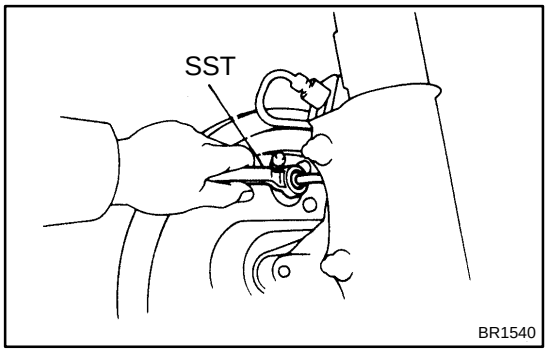

22. INSTALL LH, FRONT OR UPPER REAR WHEEL BRAKE CYLINDER ASSY

(a) Install the wheel cylinder with the 2 bolts.
Torque: 10 N·m (100 N·m, 7 ft·lbf)
(b) Using SST, connect the brake tube.
SST 09751–36011
Torque: 15 N·m (155 N·m, 11 ft·lbf)

23. APPLICATION HIGH TEMPERATURE GREASE

(a) Apply the high temperature grease to the parts indicates by arrows (See page 32–38).

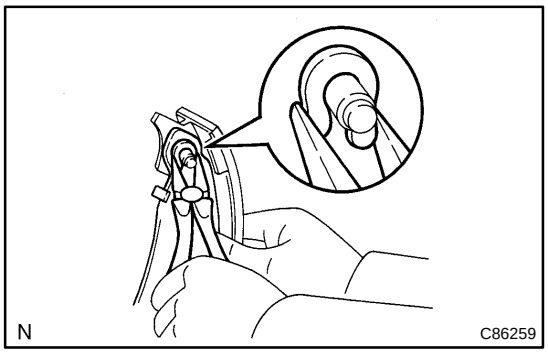

24. INSTALL PARKING BRAKE SHOE LEVER LH

(a) Install the parking brake shoe lever with a new C–washer.

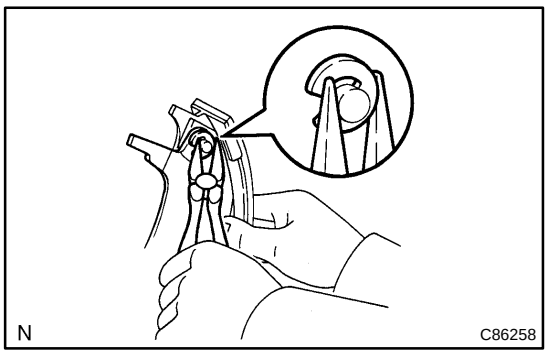

25. INSTALL REAR BRAKE AUTOMATIC ADJUST LEVER LH

(a) Install the automatic adjust lever and automatic adjust lever spring to the rear brake shoe with the E–ring.

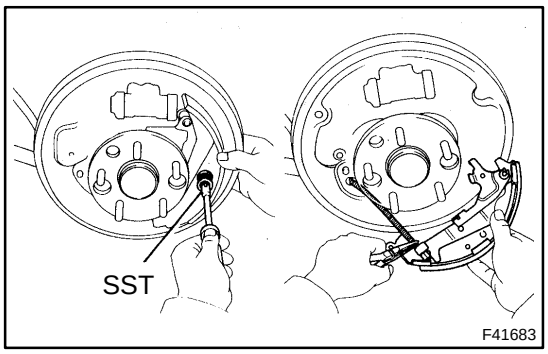

26. INSTALL REAR BRAKE SHOE

(a) Using needle–nose pliers, connect the parking brake cable to the parking brake shoe lever.

(b) Using a screwdriver, connect the paring brake cable to the anchor plate.

(c) Using SST, install the rear brake shoe, pin, shoe hold–down spring and 2 cups.
SST 09718–00010

27. INSTALL PARKING BRAKE SHOE STRUT SET LH

(a) Apply the high temperature grease to the part indicated by arrow (See page 32–38).

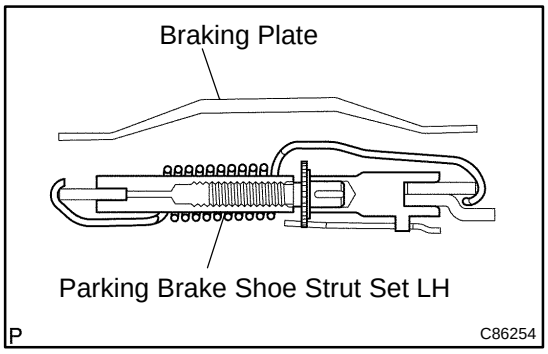

(b) Install the parking brake shoe strut set LH as shown in the installation.

(c) Connect the shoe return spring to the rear shoe.

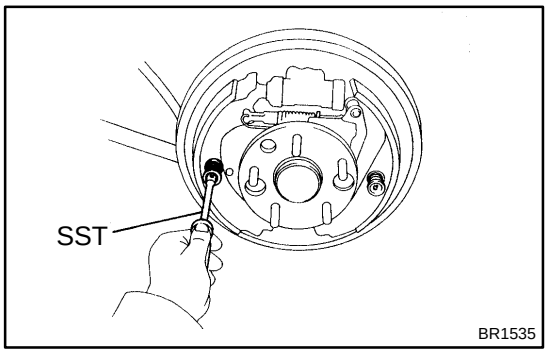

28. INSTALL FRONT BRAKE SHOE

(a) Using SST, install the front brake shoe, pin, shoe hold–down spring and cup.
SST 09718–00010

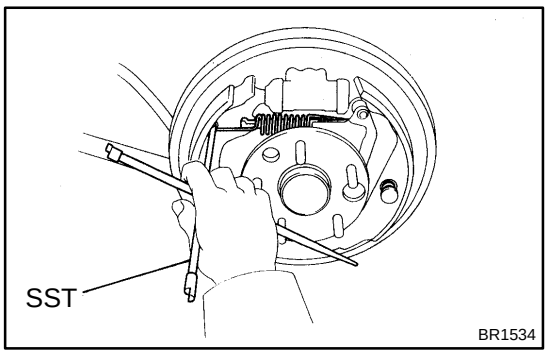

29. CONNECT PARKING BRAKE SHOE STRUT SET LH

(a) Using SST, connect the tension spring to the front and rear brake shoe.
SST 09703–30010

30. INSTALL TENSION SPRING

(a) Connect the tension spring to the front brake shoe.

31. CHECK REAR DRUM BRAKE INSTALLATION

(a) Check that each part is installed properly.

NOTICE:

There should be no oil or grease adhering to the friction surfaces of the shoe lining and drum.

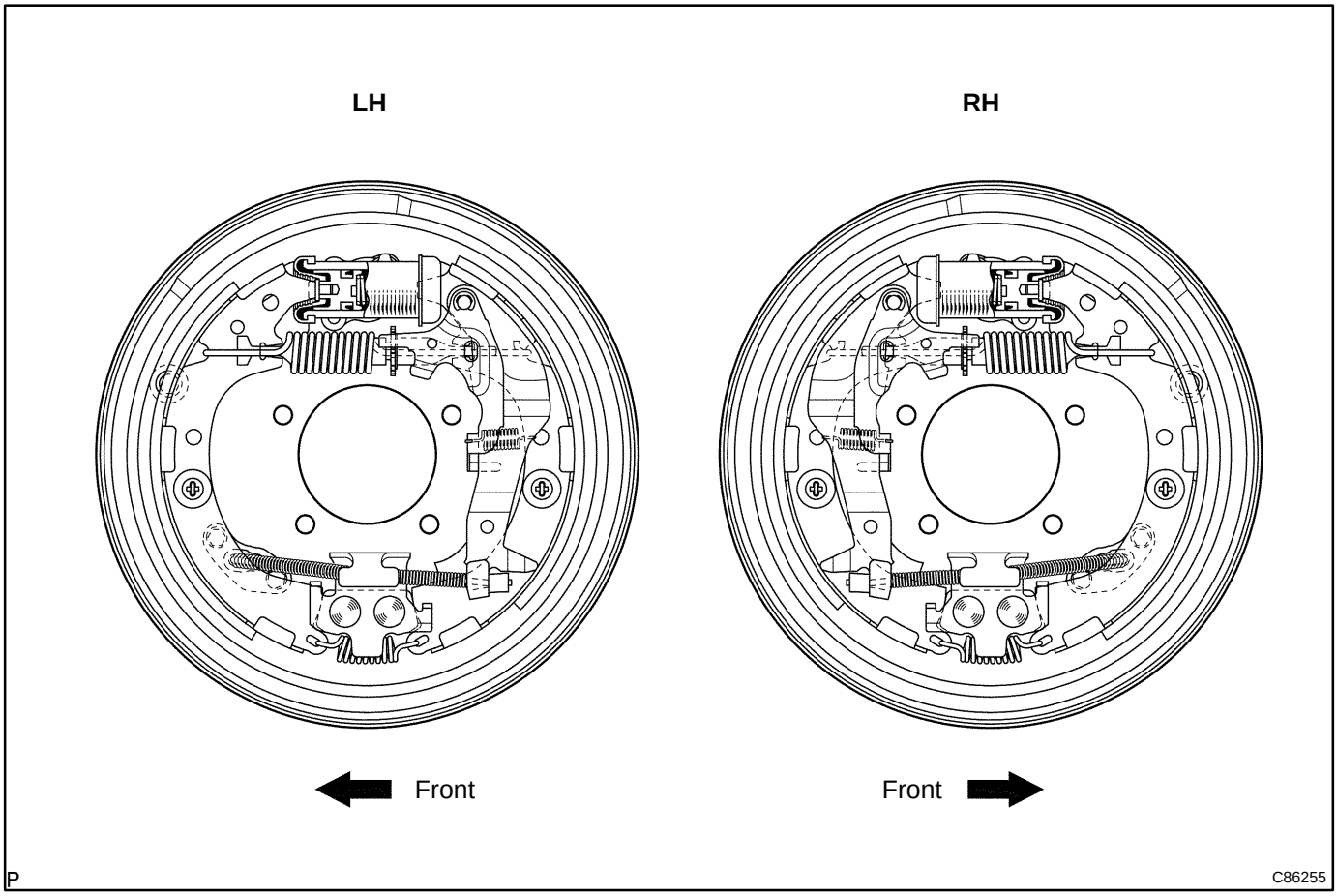

32. INSTALL REAR BRAKE DRUM SUB–ASSY

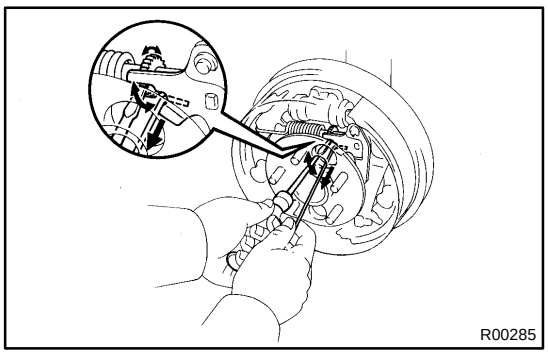

33. ADJUST REAR DRUM BRAKE SHOE CLEARANCE

HINT:

If the brake drum cannot be removed easily, do the following steps.

(a) Insert a bent wire or equivalent through the hole in the brake drum, and hold the automatic adjusting lever away from the adjuster.

(b) Using a screwdriver, reduce the brake shoe adjustment by turning the adjuster.

34. FILL RESERVOIR WITH BRAKE FLUID

35. BLEED MASTER CYLINDER(See page 32–4)

SST 09023–00100

36. BLEED BRAKE LINE(See page 32–4)

37. CHECK FLUID LEVEL IN RESERVOIR

38. CHECK BRAKE FLUID LEAKAGE
39. INSTALL REAR WHEEL
Torque: 103 N·m (1,050 kgf·cm, 76 ft·lbf)
40. CHECK PARKING BRAKE LEVER TRAVEL (LEVER TYPE PARKING BRAKE)(See page 33–2)
41. CHECK PARKING BRAKE PEDAL TRAVEL (PEDAL TYPE PARKING BRAKE)(See page 33–2)
42. ADJUST PARKING BRAKE LEVER TRAVEL (LEVER TYPE PARKING BRAKE)
(See page 33–2)
43. ADJUST PARKING BRAKE PEDAL TRAVEL (PEDAL TYPE PARKING BRAKE)
(See page 33–2)

BRAKE ACTUATOR ASSY

3203J–02

ON–VEHICLE INSPECTION

1. CONNECT HAND–HELD TESTER:

(a) Connect the hand–held tester to the DLC3.

(b) Start the engine and run it at idle.

(c) Select the ACTIVE TEST mode on the hand–held tester.

HINT:

Please refer to the hand–held tester operator's manual for further details.

2. INSPECT ACTUATOR MOTOR OPERATION

(a) With the motor relay ON, check the actuator motor operation noise.

(b) Turn the motor relay OFF.

(c) Depress the brake pedal and hold it for about 15 seconds. Check that the brake pedal cannot be depressed.

(d) With the motor relay ON, check that the pedal does not pulsate.

NOTICE:

Do not keep motor relay ON for more than 5 seconds continuously. When operating it continuously, set the interval of more than 20 seconds.

(e) Turn the motor relay OFF and release the brake pedal.

3. INSPECT RIGHT FRONT WHEEL OPERATION

NOTICE:

Never turn ON the solenoid which is not described below.

(a) With the brake pedal depressed, perform the following operations.

(b) Turn the SFRH and SFRR solenoid ON simultaneously, and check that the pedal cannot be depressed.

NOTICE:

Do not keep solenoid ON for more than 10 seconds continuously. When operating it continuously, set the interval of more than 20 seconds.

(c) Turn the SFRH and SFRR solenoid OFF simultaneously, and check that the pedal can be depressed.

(d) Turn the motor relay ON, and check that the pedal returns.

NOTICE:

Do not keep motor relay ON for more than 5 seconds continuously. When operating it continuously, set the interval of more than 20 seconds.

(e) Turn the motor relay OFF and release the brake pedal.

4. INSPECT OTHER WHEEL OPERATION

(a) As in the same procedure, check the solenoids of other wheels.

HINT:

Left front wheel: SFLH, SFLR

Right rear wheel: SRRH, SRRR

Left rear wheel: SRLH, SRLR

320CQ–01

REPLACEMENT

1. DRAIN BRAKE FLUID

NOTICE:

Wash off the brake fluied immediately if it comes into contact with a painted surface.

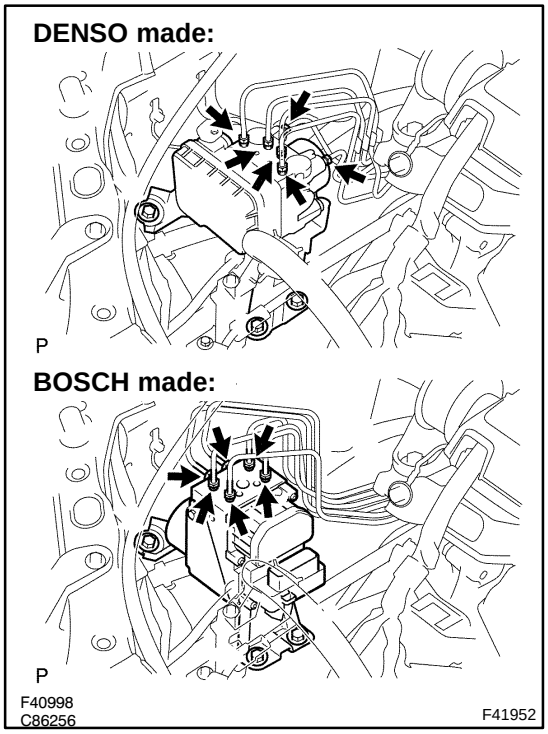

2. REMOVE BRAKE ACTUATOR WITH BRACKET

(a) Using SST, disconnect the 6 brake lines from the actuator.

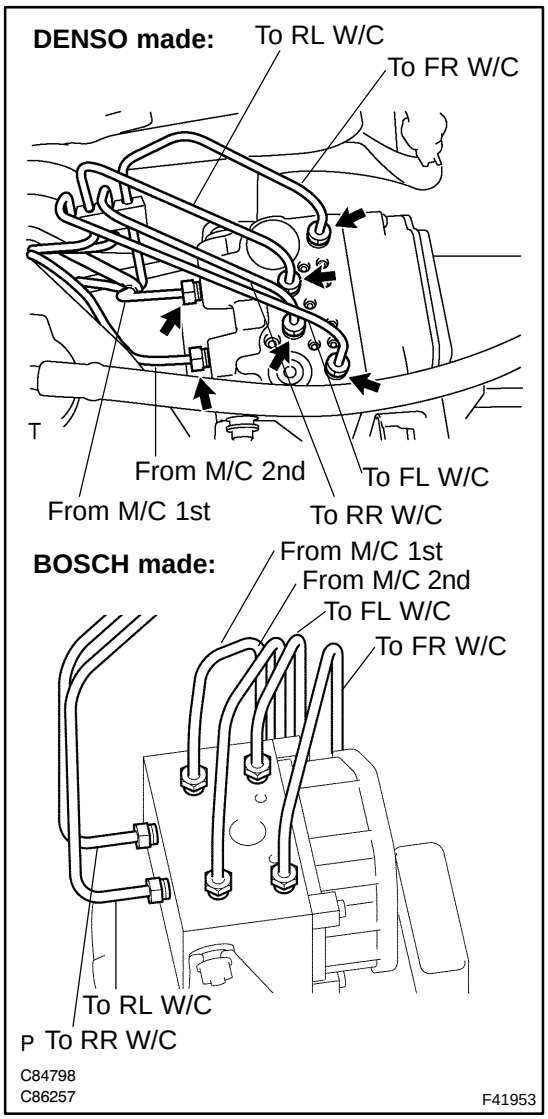

(b) Use tags or make a memo to identify the place to reconnect.
(c) Disconnect the brake actuator connector.
(d) Remove the 3 nuts and brake actuator with bracket.

3. REMOVE BRAKE ACTUATOR ASSY

(a) Remove the 2 nuts and brake actuator from the bracket.
(b) Remove the 2 holders and 3 cushions from the brake actuator.

4. INSTALL BRAKE ACTUATOR ASSY

(a) Install the 3 cushions and 2 holders to the brake actuator.
(b) Install the brake actuator to the bracket with the 2 nuts.
Torque: 5.4 N·m (55 kgf·cm, 48 in.·lbf)

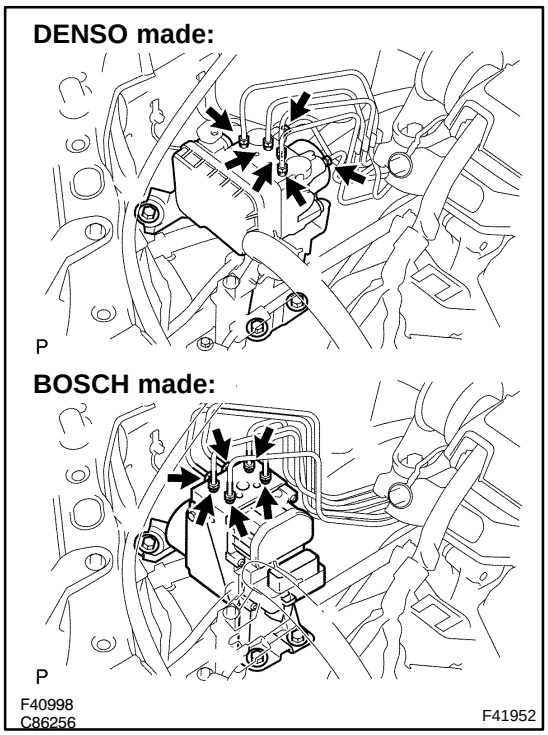

5. INSTALL BRAKE ACTUATOR WITH BRACKET

(a) Install the brake actuator with the 3 nuts.
Torque: 19 N·m (194 kgf·cm, 14 ft·lbf)

(b) Connect the brake actuator connector.

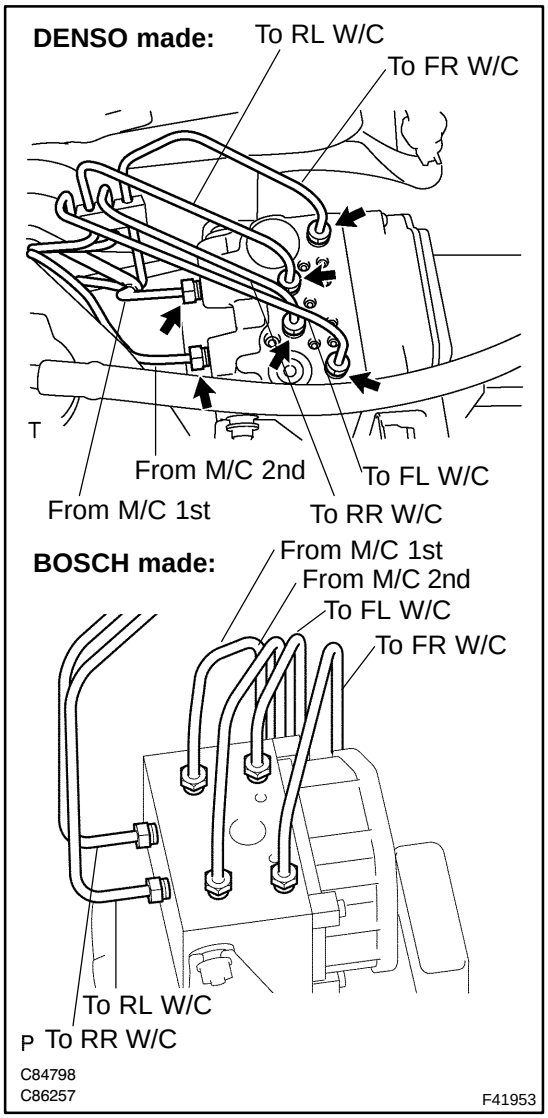

(c) Using SST, connect the each brake line to the correct position of brake actuator, as shown in the illustration.
SST 09023–00100
Torque: 15 N·m (155 kgf·cm, 11 ft·lbf)

6. FILL RESERVOIR WITH BRAKE FLUID

7. BLEED MASTER CYLINDER(See page 32–4)

SST 09023–00100

8. BLEED BRAKE LINE(See page 32–4)

9. CHECK FLUID LEVEL IN RESERVOIR

10. CHECK BRAKE FLUID LEAKAGE

11. CHECK OPERATION OF BRAKE ACTUATOR(See page 32–46)

ABS & TRACTION ACTUATOR ASSY (w/ VSC)

3203L–02

ON–VEHICLE INSPECTION

1. CONNECT HAND–HELD TESTER:

(a) Connect the hand–held tester to the DLC3.

(b) Start the engine and run it at idle.

(c) Select the ACTIVE TEST mode on the hand–held tester.

HINT:

Please refer to the hand–held tester operator's manual for further details.

2. INSPECT ACTUATOR MOTOR OPERATION

(a) With the motor relay ON, check the actuator motor operation noise.

(b) Turn the motor relay OFF.

(c) Depress the brake pedal and hold it for about 15 seconds. Check that the brake pedal cannot be depressed.

(d) With the motor relay ON, check that the pedal does not pulsate.

NOTICE:

Do not keep motor relay ON for more than 5 seconds continuously. When operating it continuously, set the interval of more than 20 seconds.

(e) Turn the motor relay OFF and release the brake pedal.

3. INSPECT RIGHT FRONT WHEEL OPERATION

NOTICE:

Never turn ON the solenoid which is not described below.

(a) With the brake pedal depressed, perform the following operations.

(b) Turn the SFRH and SFRR solenoid ON simultaneously, and check that the pedal cannot be depressed.

NOTICE:

Do not keep solenoid ON for more than 10 seconds continuously. When operating it continuously, set the interval of more than 20 seconds.

(c) Turn the SFRH and SFRR solenoid OFF simultaneously, and check that the pedal can be depressed.

(d) Turn the motor relay ON, and check that the pedal returns.

NOTICE:

Do not keep motor relay ON for more than 5 seconds continuously. When operating it continuously, set the interval of more than 20 seconds.

(e) Turn the motor relay OFF and release the brake pedal.

4. INSPECT OTHER WHEEL OPERATION

(a) As in the same procedure, check the solenoids of other wheels.

HINT:

Left front wheel: SFLH, SFLR

Right rear wheel: SRRH, SRRR

Left rear wheel: SRLH, SRLR

REPLACEMENT

1. DRAIN BRAKE FLUID

NOTICE:

Wash off the brake fluied immediately if it comes into contact with a painted surface.

2. REMOVE ABS & TRACTION ACTUATOR ASSY WITH BRACKET

(a) Slide the clip and disconnect the actuator No. 1 hose from the actuator.

(b) Disconnect the master cylinder pressure sensor connector and harness clamp.

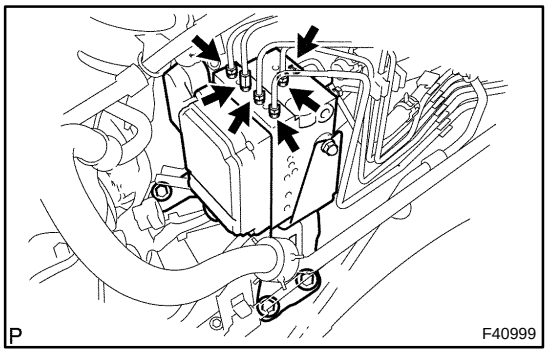

(c) Using SST, disconnect the 6 brake lines from the actuator.
SST 09023–00100

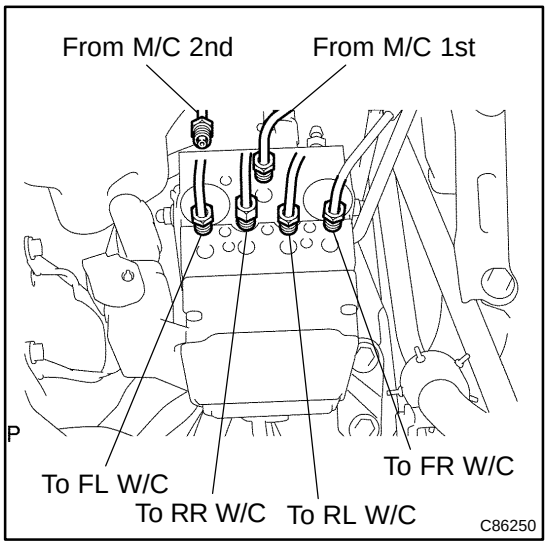

(d) Use tags or make a memo to identify the place to reconnect.

(e) Disconnect the actuator connector.

(f) Remove the 3 nuts and brake actuator with bracket.

3. REMOVE ABS & TRACTION ACTUATOR ASSY

(a) Remove the 2 nuts and ABS & TRACTION actuator from the bracket.

(b) Remove the 2 holders and 3 cushions from the actuator.

4. INSTALL ABS & TRACTION ACTUATOR ASSY

(a) Install the 3 cushions and 2 holders to the ABS & TRACTION actuator.

(b) Install the actuator to the bracket with the 2 nuts.
Torque: 5.4 N·m (55 kgf·cm, 48 in.·lbf)

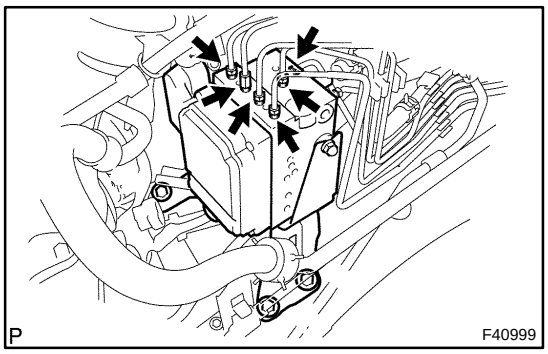

5. INSTALL ABS & TRACTION ACTUATOR ASSY WITH BRACKET

(a) Install the brake actuator with the 3 nuts.
Torque: 19 N·m (194 kgf·cm, 14 ft·lbf)

(b) Connect the brake actuator connector.

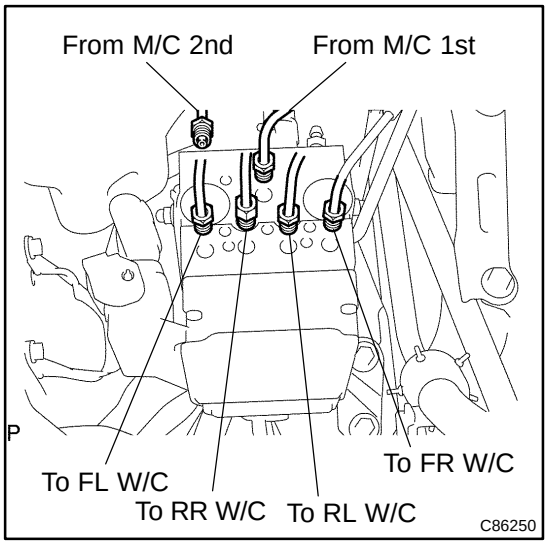

(c) Using SST, connect the each brake line to the correct position of brake actuator, as shown in the illustration.
SST 09023–00100
Torque: 15 N·m (155 kgf·cm, 11 ft·lbf)

6. FILL RESERVOIR WITH BRAKE FLUID
7. BLEED MASTER CYLINDER(See page 32–4)
SST 09023–00100
8. BLEED BRAKE LINE(See page 32–4)
9. CHECK FLUID LEVEL IN RESERVOIR
10. CHECK BRAKE FLUID LEAKAGE
11. CHECK OPERATION OF BRAKE ACTUATOR(See page 32–51)

PROPORTIONING VALVE ASSY

320I5–01

ON–VEHICLE INSPECTION

1. INSTALL LSPV GAUGE (SST) AND BLEED AIR

(a) Remove the bleeder plugs from the front and rear brake cylinder.

(b) Install the LSPV gauge (SST), and bleed the air.
SST 09709–29018

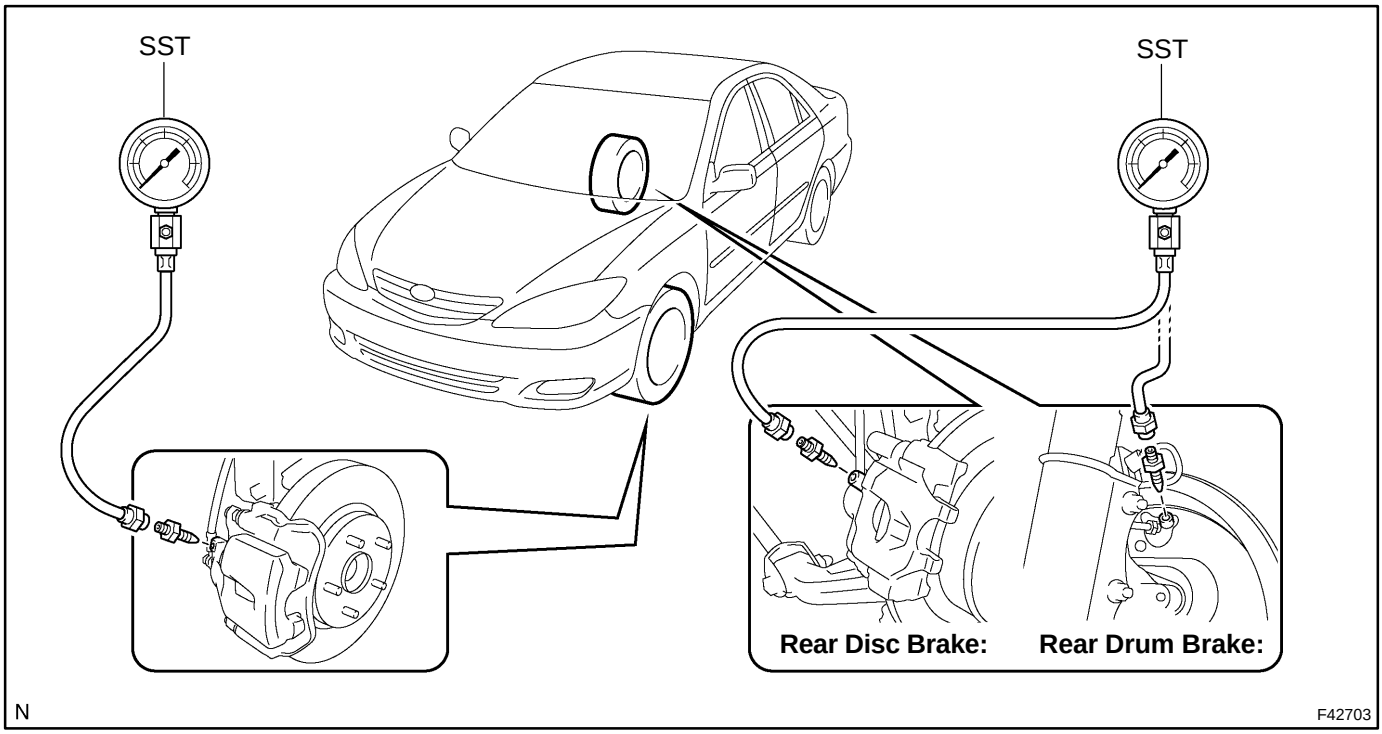

2. RAISE MASTER CYLINDER PRESSURE AND CHECK REAR WHEEL CYLINDER PRESSURE

Master cylinder pressure	Rear wheel cylinder pressure
2,452 kPa (25 kgf/cm^2, 356 psi)	2,452 kPa (25 kgf/cm^2, 356 psi)
4,413 kPa (45 kgf/cm^2, 639 psi)	3,177 kPa (32 kgf/cm^2, 460 psi)
7,845 kPa (80 kgf/cm^2, 1,138 psi)	4,413 kPa (45 kgf/cm^2, 639 psi)

HINT:

When inspecting the fluid pressure, inspect the left front and right rear together, and the right front and left rear together.

If the rear wheel cylinder pressure is improper, replace the proportioning valve assembly.

3. REMOVE LSPV GAUGE (SST)

(a) Remove the LSPV gauge (SST).
SST 09709–29018

(b) Install the bleeder plugs.
Torque: 8.3 N·m (85 kgf·cm, 74 in.·lbf)

4. BLEED BRAKE SYSTEM (See page 32–4)

5. CHECK FOR LEAKS

320I6–01

REPLACEMENT

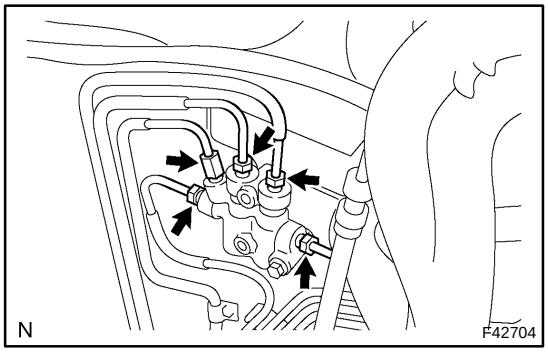

1. REMOVE PROPORTIONING VALVE ASSY

(a) Using SST, disconnect the 5 brake tubes from the proportioning valve assy.
SST 09023–00100

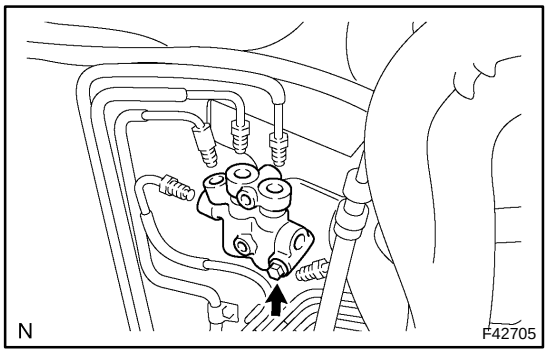

(b) Remove the bolt and proportioning valve assy from the body.

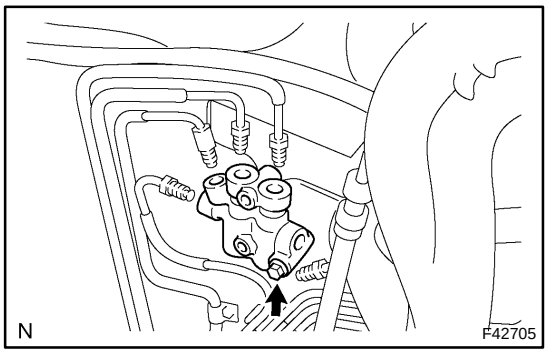

2. INSTALL PROPORTIONING VALVE ASSY

(a) Install the proportioning valve assy with the bolt.
Torque: 5.4 N·m (55 kgf·cm, 48 in·lbf)

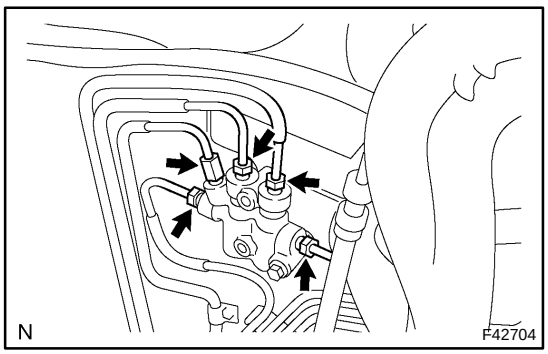

(b) Using SST, connect the 5 brake tubes to the proportioning valve assy.
SST 09023–00100
Torque: 15.2 N·m (155 kgf·cm, 11 ft·lbf)

3. FILL RESERVOIR WITH BRAKE FLUID

4. BLEED MASTER CYLINDER (See page 32–4)
SST 09023–00100

5. BLEED BRAKE LINE (See page 32–4)

6. CHECK FLUID LEVEL IN RESERVOIR

SPEED SENSOR FRONT LH

3203N–02

REPLACEMENT

HINT:

Replace the RH side by the same procedures with LH side.

1. REMOVE FRONT WHEEL

2. REMOVE FRONT FENDER LINER LH

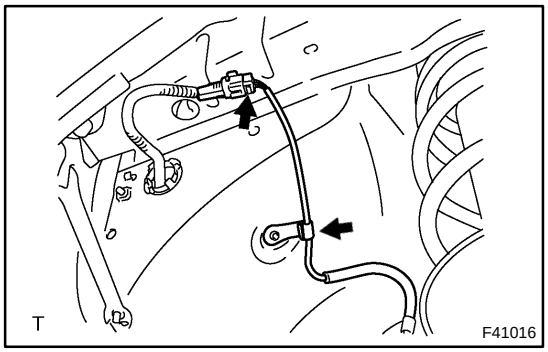

3. REMOVE SPEED SENSOR FRONT LH

(a) Disconnect the speed sensor connector and clamp.

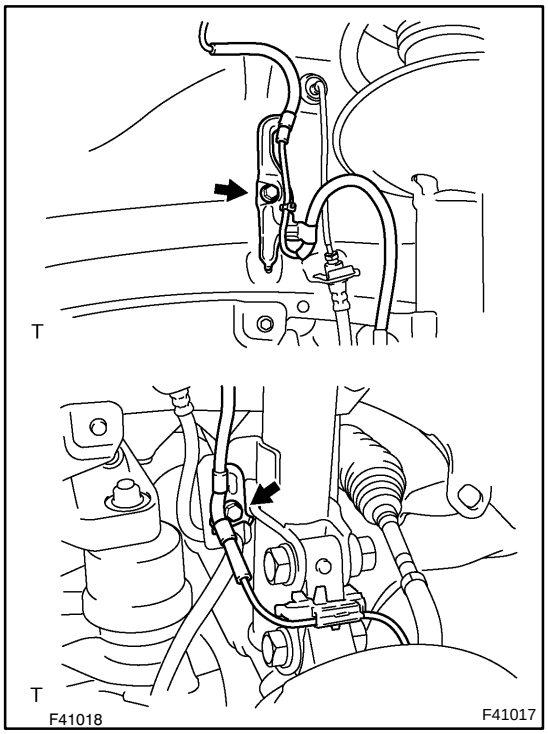

(b) Remove the 2 clamp bolts holding the sensor harness and clamp from the body and shock absorber.

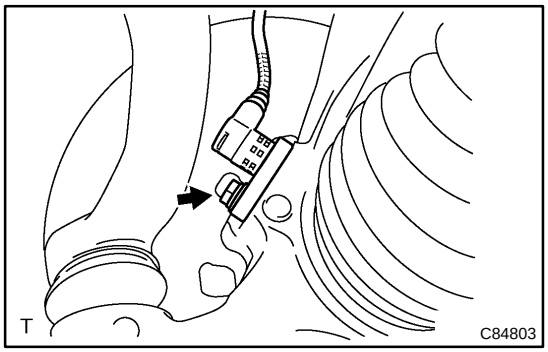

(c) Remove the bolt and speed sensor FR LH.

NOTICE:

Do not stick and foreign matter on the sensor tip.

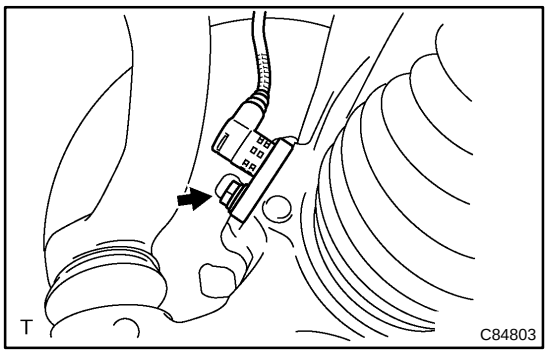

4. INSTALL SPEED SENSOR FRONT LH

(a) Install the speed sensor FR LH with the bolt.
Torque: 8.0 N·m (82 kgf·cm, 71 in.·lbf)

NOTICE:
Make sure the sensor tip is clean.

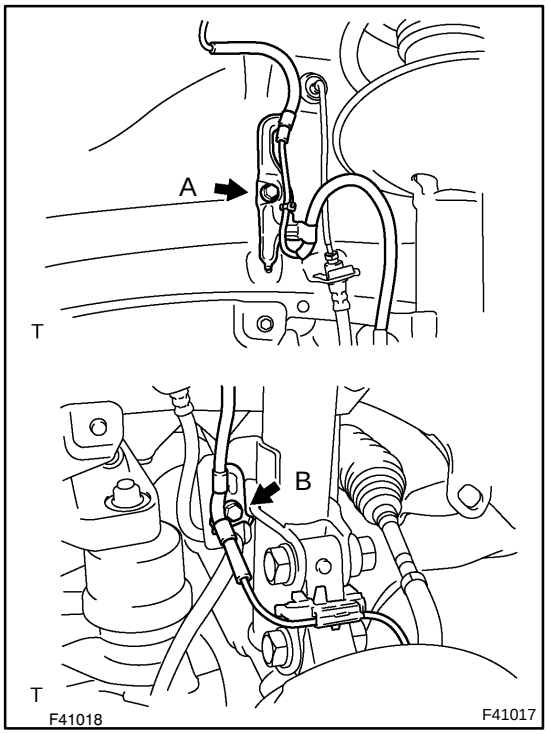

(b) Install the sensor harness clamps with the 2 bolts ”A” and ”B” to the body and shock absorber.
Torque:
Bolt A: 5.0 N·m (51 kgf·cm, 44 in.·lbf)
Bolt B: 18.8 N·m (192 kgf·cm, 14 ft·lbf)

(c) Connect the clamp to the knuckle.

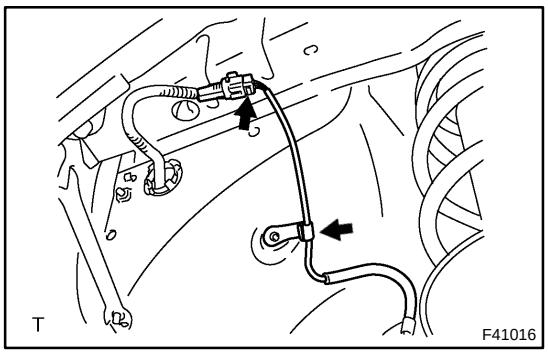

(d) Connect the speed sensor connector and clamp.

5. INSTALL FRONT FENDER LINER LH

6. INSTALL FRONT WHEEL
Torque: 103 N·m (1,050 kgf·cm, 76 ft·lbf)

7. CHECK ABS SPEED SENSOR SIGNAL(See page 05–363 or 05–404 or 05–452)

SKID CONTROL SENSOR

320CS–01

REPLACEMENT

HINT:

Replace the RH side by the same procedure with LH side.

1. REMOVE REAR WHEEL

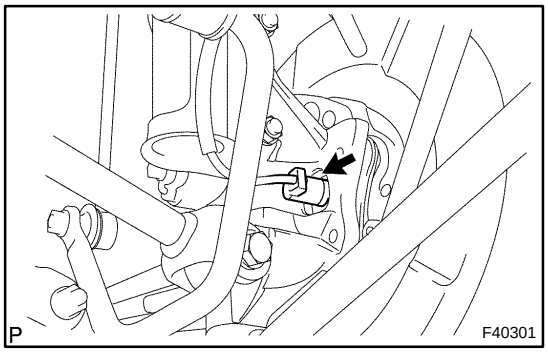

2. DISCONNECT SKID CONTROL SENSOR WIRE

(a) Disconnect the connector from the skid control sensor.

3. REMOVE REAR DISC BRAKE CALIPER ASSY, LH(See page 32–33)

4. REMOVE REAR DISC

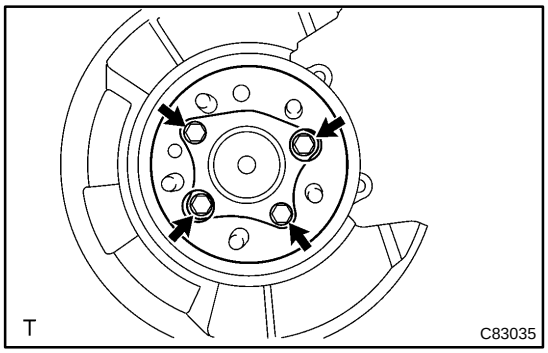

5. REMOVE REAR AXLE HUB & BEARING ASSY LH

(a) Remove the 4 bolts and rear axle hub & bearing assy.

6. REMOVE SKID CONTROL SENSOR

(a) Mount the rear axle hub in a soft jaw vise.

NOTICE:

Replace the axle hub assembly if it is dropped or a strong shock is given to it.

(b) Using a pin punch and hammer, drive out the 2 pins and remove the 2 attachments from SST.

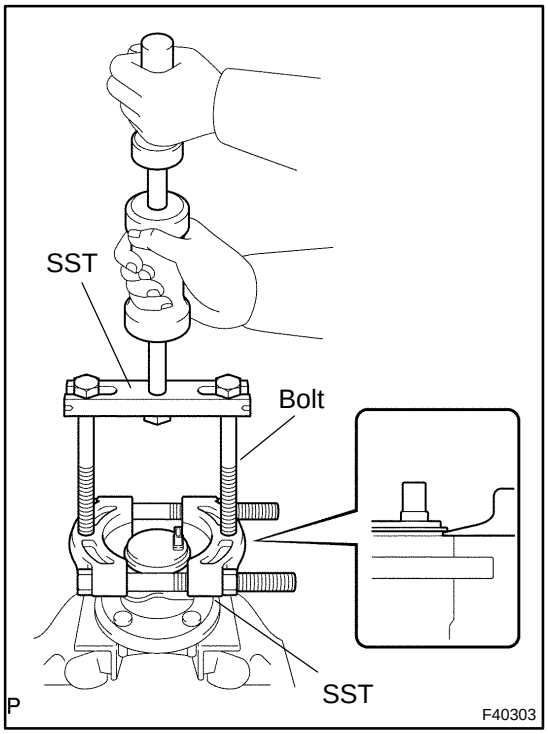

(c) Using SST and 2 bolts (Diameter: 12 mm, pitch: 1.5 mm), remove the skid control sensor from the rear axle hub.

SST 09520–00031 (09520–00040), 09521–00020, 09950–00020

NOTICE:

- **If a damage is inflicted to the sensor rotor, replace the axle hub assembly.**
- **Do not scratch the contacting surface of axle hub and speed sensor.**

7. INSTALL SKID CONTROL SENSOR

(a) Clean the contacting surface of the axle hub and a new skid control sensor.

NOTICE:

Make sure the sensor rotor is clean.

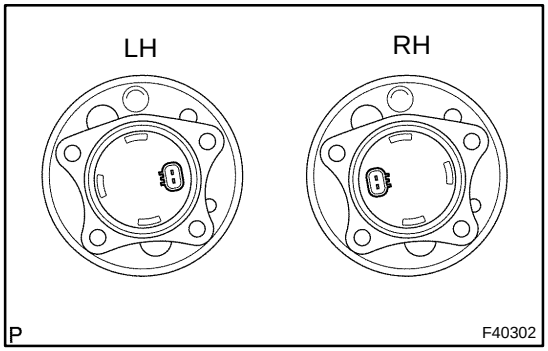

(b) Place the speed sensor on the axle hub so that the connector is positioned, as shown in the illustration.

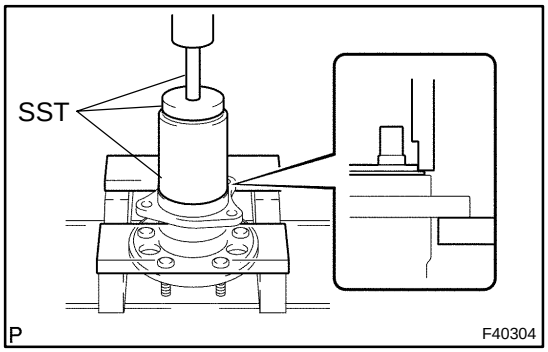

(c) Using SST and a press, install the skid control sensor to the axle hub.

NOTICE:

- **Do not tap the skid control sensor with a hammer directly.**
- **Check that the skid control sensor detection part is clean.**
- **Press in the skid control sensor straight and slowly.**

SST 09830–36010, 09950–60010 (09951–00650), 09950–70010 (09951–07100)

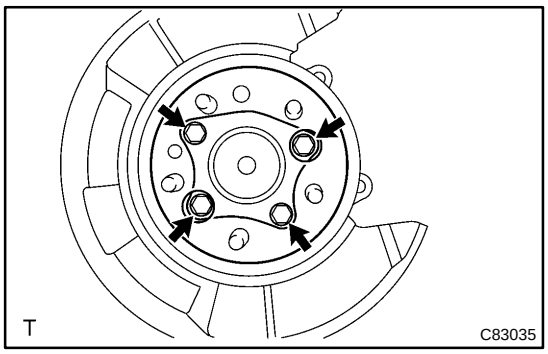

8. INSTALL REAR AXLE HUB & BEARING ASSY LH

(a) Install the rear axle hub & bearing assy with the 4 bolts.
Torque: 80 N·m (816 kgf·cm, 59 ft·lbf)

9. INSTALL REAR DISC

10. INSTALL REAR DISC BRAKE CALIPER ASSY, LH(See page 32–33)
11. CONNECT SKID CONTROL SENSOR WIRE

12. INSTALL REAR WHEEL
Torque: 103 N·m (1,050 kgf·cm, 76 ft·lbf)
13. INSPECT TIRE(See page 27–3)
14. MEASURE VEHICLE HEIGHT(See page 27–3)
15. INSPECT SIDE SLIP(See page 27–3)
16. INSPECT CAMBER(See page 27–3)
17. INSPECT TOE–IN(See page 27–3)
18. ADJUST CAMBER AND TOE–IN(See page 27–3)
19. CHECK ABS SPEED SENSOR SIGNAL(See page 05–363, 05–404 or 05–452)

YAWRATE SENSOR

320D6–01

REPLACEMENT

NOTICE:

Do not separate the sensor from the bracket.

1. **REMOVE CONSOLE PANEL UPPER REAR (See page 71–12)**
2. **REMOVE RR CONSOLE BOX(See page 71–12)**

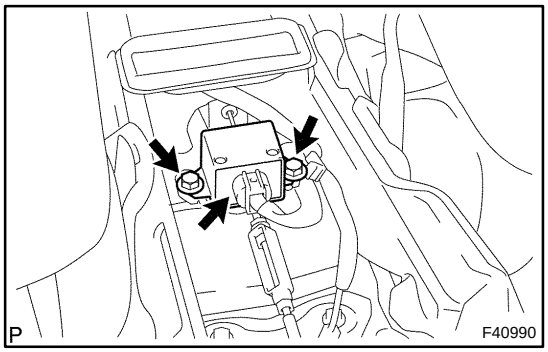

3. **REMOVE YAWRATE SENSOR**

(a) Disconnect the yawrate sensor connector.
(b) Remove the 2 bolts and yawrate sensor.

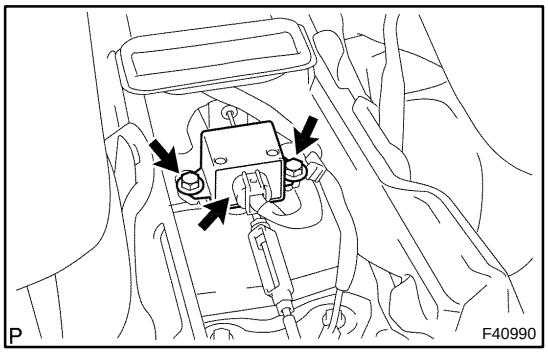

4. **INSTALL YAWRATE SENSOR**

(a) Install the yawrate sensor with the 2 bolts.
Torque: 12.5 N·m (127 kgf·cm, 9 ft·lbf)
(b) Connect the yawrate sensor connector.

5. **INSTALL RR CONSOLE BOX(See page 71–12)**
6. **INSTALL CONSOLE PANEL UPPER REAR (See page 71–12)**
7. **PERFORM YAWRATE SENSOR ZERO POINT CALIBRATION(See page 05–452)**
8. **PERFORM DECELERATION SENSOR ZERO POINT CALIBRATION(See page 05–452)**

STEERING SENSOR

3203S–02

REPLACEMENT

1. **PRECAUTION(See page 60–25)**
2. **SEPARATE BATTERY NEGATIVE TERMINAL(See page 60–25)**
3. **PLACE FRONT WHEELS FACING STRAIGHT AHEAD(See page 60–25)**
4. **REMOVE STEERING WHEEL COVER LOWER NO.2**
   (See page 60–25)
5. **REMOVE STEERING WHEEL COVER LOWER NO.2(4 SPOKE STEERING WHEEL ASSY)**
   (See page 60–25)
6. **REMOVE STEERING WHEEL COVER LOWER NO.3(3 SPOKE STEERING WHEEL ASSY)**
   (See page 60–25)
7. **REMOVE HORN BUTTON ASSY**
   (See page 60–25)
8. **REMOVE STEERING WHEEL ASSY**
   (See page 60–25)
   SST 09950–50013 (09951–05010, 09952–05010, 09953–05020, 09954–05021)
9. **REMOVE INSTRUMENT CLUSTER FINISH PANEL**
   (See page 60–25)
10. **REMOVE STEERING COLUMN COVER**
    (See page 60–25)
11. **REMOVE SPIRAL CABLE SUB–ASSY**
    (See page 60–25)
12. **REMOVE STEERING SENSOR**

13. **INSTALL STEERING SENSOR**

14. **INSPECT SPIRAL CABLE SUB–ASSY**

(a) If the following condition is identified, replace the spiral cable sub–assy with new one.
Condition:
Scratches or cracks on the connector
Cracks, dents or chipping of the spiral cable sub–assy

15. **PLACE FRONT WHEELS FACING STRAIGHT AHEAD(See page 60–25)**
16. **INSTALL SPIRAL CABLE SUB–ASSY**
    (See page 60–25)
17. **CENTER SPIRAL CABLE(See page 60–25)**
18. **INSTALL STEERING WHEEL ASSY**
    (See page 60–25)
19. **INSTALL HORN BUTTON ASSY**
    (See page 60–25)
20. **INSPECT HORN BUTTON ASSY**
    (See page 60–25)
21. **INSPECT SRS WARNING LIGHT(See page 05–452)**

SKID CONTROL ECU ASSY

3203T–02

REPLACEMENT

1. **REMOVE INSTRUMENT PANEL UNDER COVER SUB–ASSY NO.1**
   (See page 71–25)
2. **REMOVE INSTRUMENT PANEL SUB–ASSY LOWER**
   (See page 71–25)

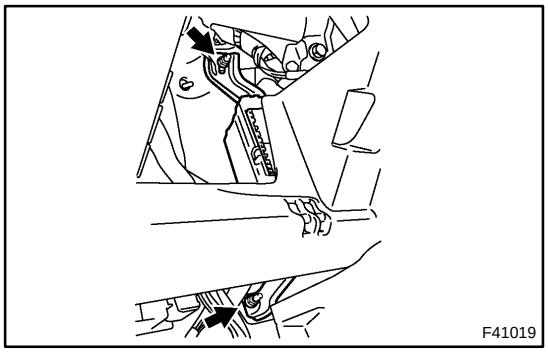

3. **REMOVE SKID CONTROL ECU ASSY**

(a) Remove the 2 nuts and disconnect the skid control ECU from the reinforcement.
(b) Disconnect the skid control ECU connectors and remove the skid control ECU assy.

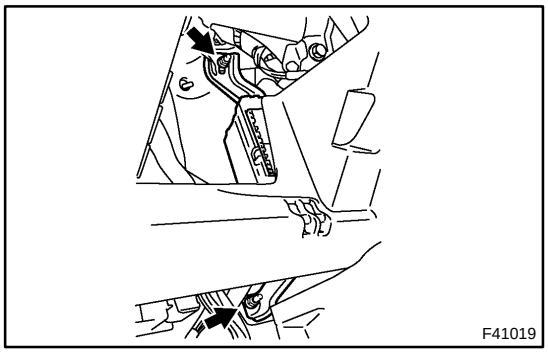

4. **INSTALL SKID CONTROL ECU ASSY**

(a) Connect the skid control ECU connectors.
(b) Install the skid control ECU to the reinforcement with the 2 nuts.
Torque: 5.5 N·m (56 kgf·cm, 49 in.·lbf)

5. **INSTALL INSTRUMENT PANEL SUB–ASSY LOWER**
   (See page 71–25)
6. **INSTALL INSTRUMENT PANEL UNDER COVER SUB–ASSY NO.1**
   (See page 71–25)
7. **PERFORM YAWRATE SENSOR ZERO POINT CALIBRATION(W/ VSC)(See page 05–452)**
8. **PERFORM DECELERATION SENSOR ZERO POINT CALIBRATION(W/ VSC)(See page 05–452)**
9. **CHECK VSC SENSOR SIGNAL(W/ VSC)(See page 05–452)**

PARKING BRAKE SYSTEM

3304S–01

PROBLEM SYMPTOMS TABLE

Use the table below to help you find the cause of the problem. The numbers indicate the priority of the likely cause of the problem. Check each part in order. If necessary, replace these parts.

Symptom	Suspect Area	See page
Brake drag	1. Parking brake pedal or lever travel (Out of adjustment)	33–2
	2. Parking brake wire (Sticking)	33–12 33–16 33–19
	3. Parking brake shoe clearance (Out of adjustment)	33–21
	4. Parking brake shoe lining (Cracked or distorted)	33–21
	5. Tension or return spring (Damaged)	33–21

3304T–01

ADJUSTMENT

1. REMOVE REAR WHEEL

2. ADJUST PARKING BRAKE SHOE CLEARANCE(See page 33–21)

3. INSTALL REAR WHEEL

Torque: 103 N·m (1,050 kgf·cm, 76 ft·lbf)

4. INSPECT PARKING BRAKE PEDAL TRAVEL(PEDAL TYPE PARKING BRAKE)

(a) Slowly depress the parking brake pedal all the way, and count the number of clicks.

Parking brake pedal travel: 3 – 6 clicks at 300 N (31 kgf, 68.3 lbf)

5. INSPECT PARKING BRAKE LEVER TRAVEL(LEVER TYPE PARKING BRAKE)

(a) Pull the parking brake lever all the way up, and count the number of clicks.

Parking brake lever travel: 6 – 9 clicks at 200 N (20 kgf, 44.1 lbf)

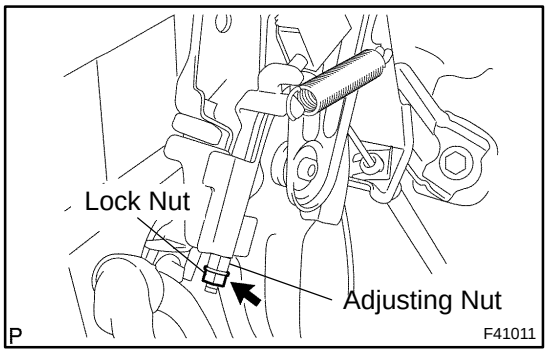

6. ADJUST PARKING BRAKE PEDAL TRAVEL(PEDAL TYPE PARKING BRAKE)

(a) Depress the parking brake pedal 3 notches to make a room for the procedure, and loosen the lock nut.

(b) Return the parking brake pedal to the original position.

(c) Turn the adjusting nut until the parking brake pedal travel is correct.

(d) Depress the parking brake pedal 3 notches to make a room for the procedure, and tighten the lock nut.

Torque: 5.4 N·m (55 kgf·cm, 48 in.·lbf)

(e) Return the parking brake pedal to the original position.

(f) Check whether parking brake drags or not.

(g) When operating the parking brake pedal, check that the parking brake pedal indicator light lights up.

7. ADJUST PARKING BRAKE LEVER TRAVEL(LEVER TYPE PARKING BRAKE)

(a) Remove the console panel upper.

(b) Remove the air duct rear No. 1.

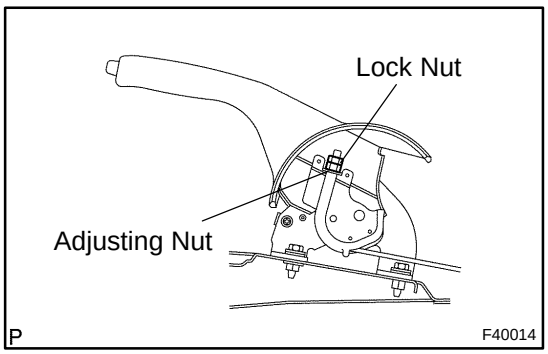

(c) Loosen the lock nut and turn the adjusting nut until the lever travel is correct.

(d) Tighten the lock nut.

Torque: 5.0 N·m (51 kgf·cm, 44 in.·lbf)

(e) Install the air duct rear No.1.

(f) Install the console panel upper.

PARKING BRAKE

3304Z–01

COMPONENTS

Parking Brake Lever Sub–assy:

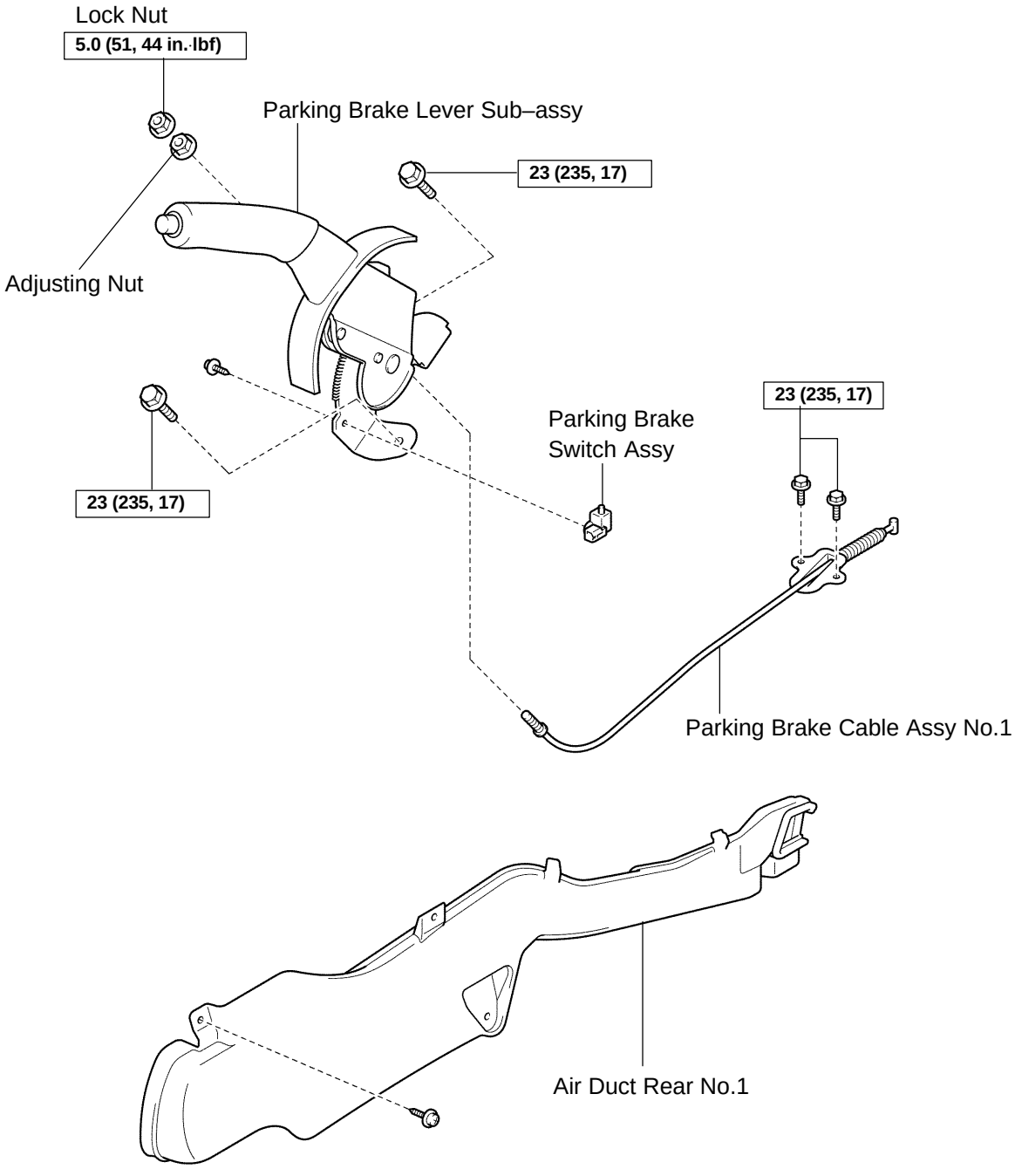

P N·m (kgf·cm, ft·lbf) : Specified torque

F41002

Parking Brake Control Pedal Assy:

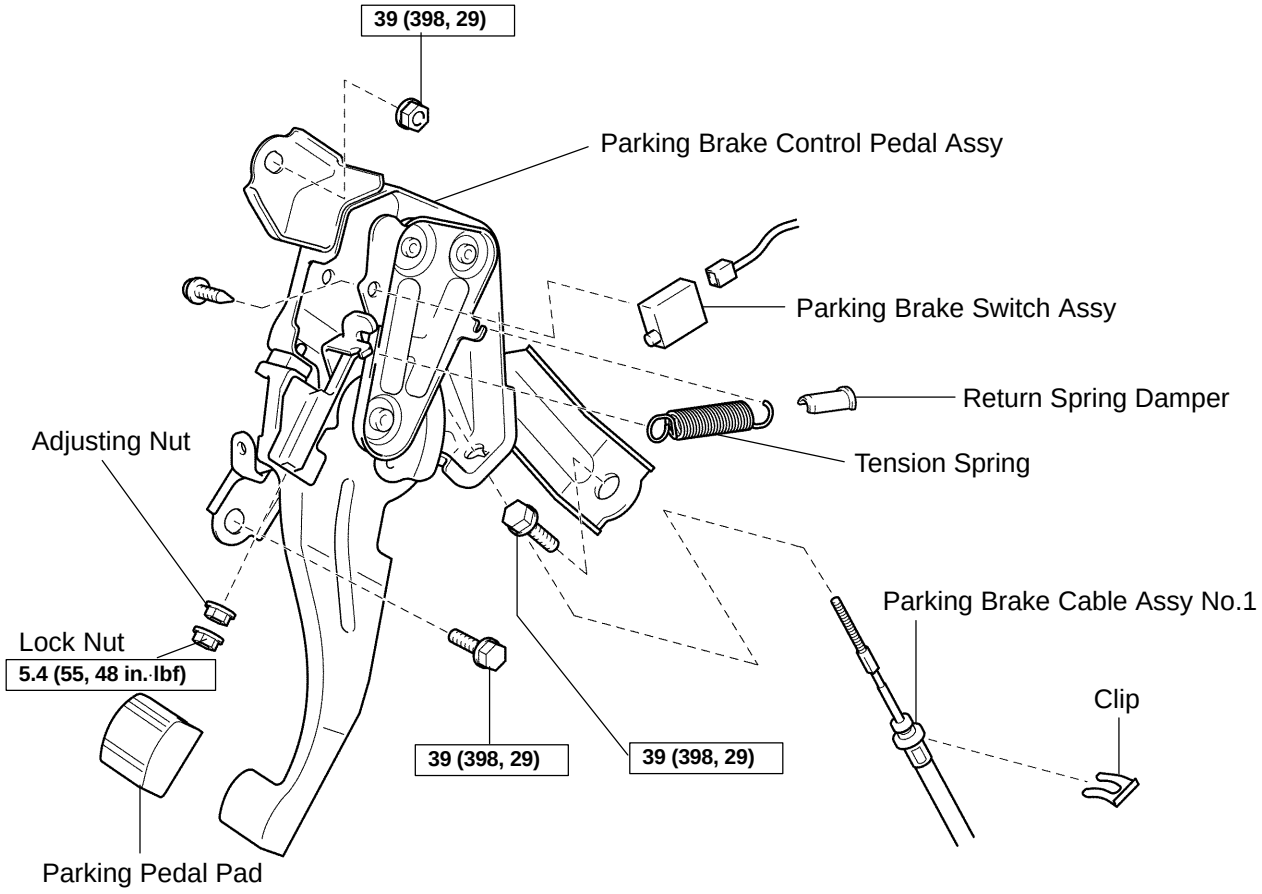

P N·m (kgf·cm, ft·lbf) : Specified torque

F41008

Parking Brake Cable:

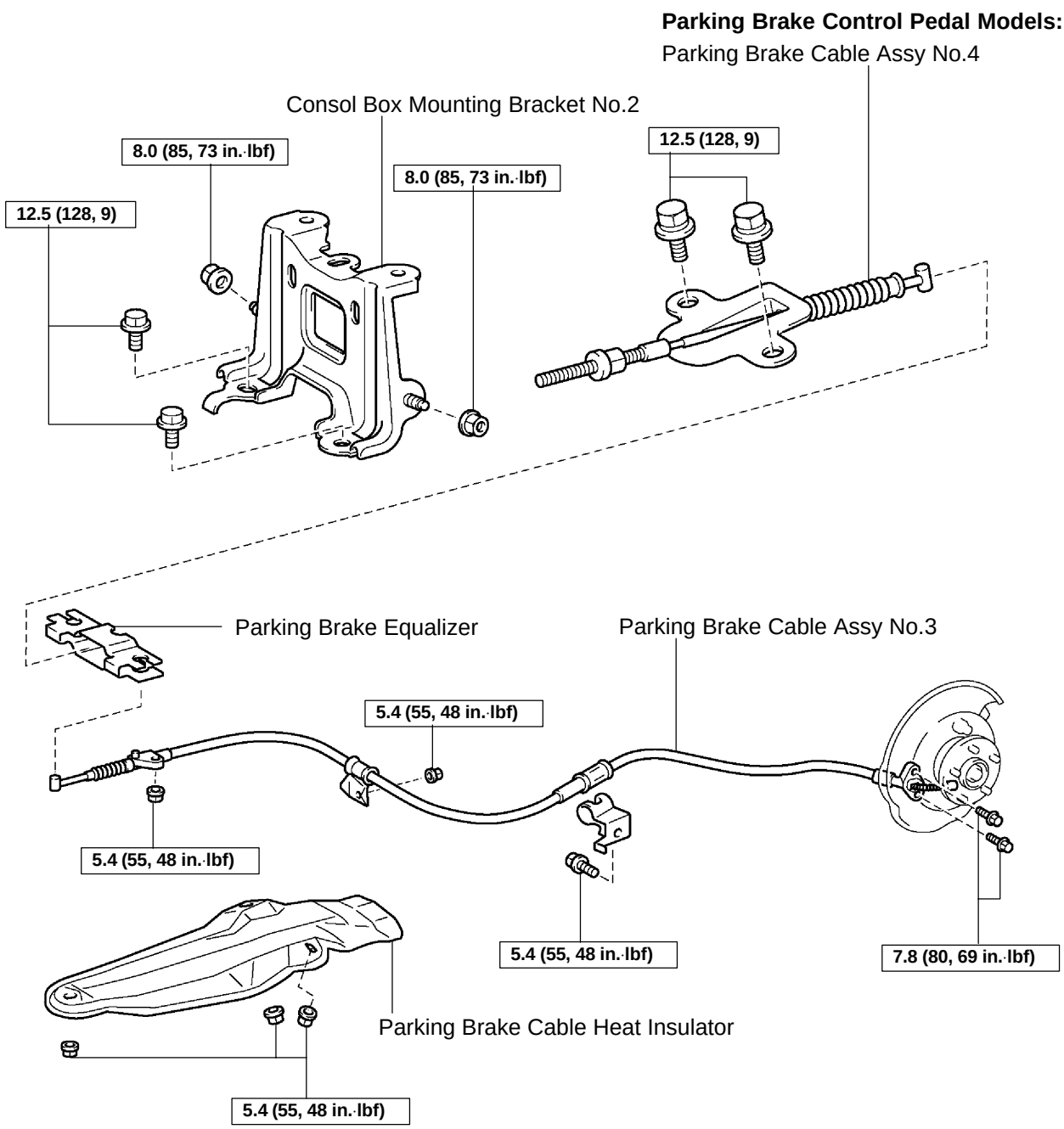

N·m (kgf·cm, ft·lbf) : Specified torque

C90467 F41686

Parking Brake Assy:

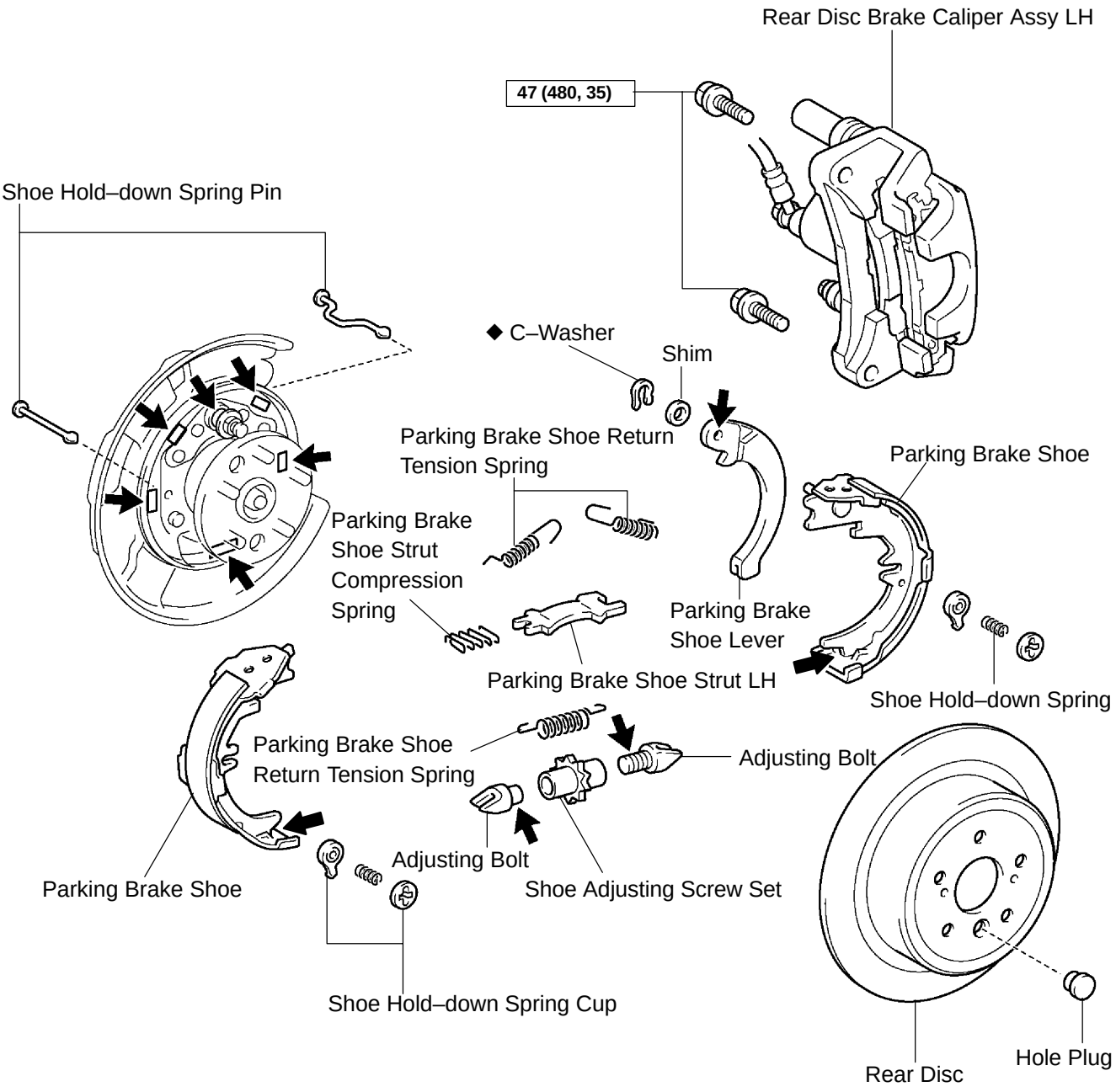

N·m (kgf·cm, ft·lbf) : Specified torque
◆ Non–reusable part
⬅ High Temperature grease

C90458 F41967

PARKING BRAKE LEVER SUB–ASSY

3304U–01

REPLACEMENT

HINT:

COMPONENTS: See page 71–7 and 33–3

1. REMOVE CONSOLE PANEL UPPER
(See page 71–12)

2. REMOVE AIR DUCT REAR NO.1
(See page 71–12)

3. REMOVE PARKING BRAKE LEVER SUB–ASSY

(a) Disconnect the parking brake switch connector.
(b) Remove the lock nut and adjusting nut.

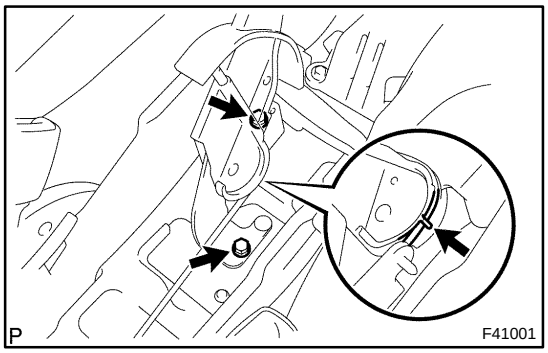

(c) Remove the 2 bolts.
(d) Using a screwdriver, disconnect the parking brake cable No. 1 and remove the parking brake lever sub–assy.

4. REMOVE PARKING BRAKE SWITCH ASSY

(a) Remove the screw and parking brake switch assy.

5. INSTALL PARKING BRAKE SWITCH ASSY

(a) Install the parking brake switch assy with the screw.

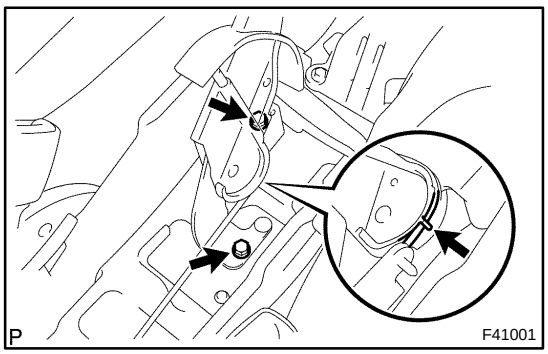

6. INSTALL PARKING BRAKE LEVER SUB–ASSY

(a) Connect the parking brake cable to the lever and install the adjusting nut and lock nut.
(b) Install the paking brake lever sub–assy with the 2 bolts.
Torque: 23 N·m (235 kgf·cm, 17 ft·lbf)
(c) Connect the parking brake switch connector.

7. INSTALL AIR DUCT REAR NO.1
(See page 71–12)

8. INSTALL CONSOLE PANEL UPPER
(See page 71–12)

9. CHECK PARKING BRAKE LEVER TRAVEL(See page 33–2)

10. ADJUST PARKING BRAKE LEVER TRAVEL(See page 33–2)

PARKING BRAKE CONTROL PEDAL ASSY

3304V–01

OVERHAUL

HINT:

COMPONENTS: See page 71–7 and 33–3

1. **REMOVE INSTRUMENT CLUSTER FINISH PANEL (See page 71–12)**
2. **REMOVE COMBINATION METER ASSY (See page 71–12)**
3. **REMOVE FRONT DOOR SCUFF PLATE LH (See page 71–12)**
4. **REMOVE COWL SIDE TRIM SUB–ASSY LH (See page 71–12)**
5. **REMOVE INSTRUMENT PANEL SUB–ASSY UPPER (See page 71–12)**
6. **REMOVE INSTRUMENT PNL INSERT SUB–ASSY LWR LH (See page 71–12)**

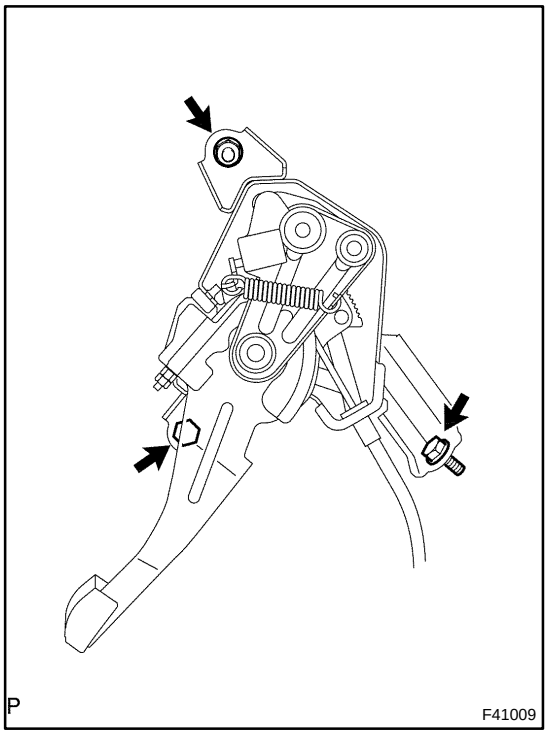

7. REMOVE PARKING BRAKE CONTROL PEDAL ASSY

(a) Disconnect the parking brake switch connector.

(b) Remove the 2 bolts, nut and parking brake control pedal assy.

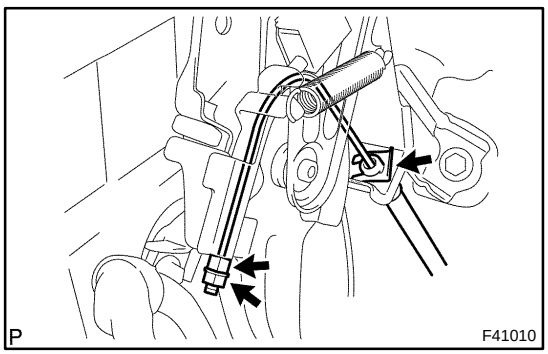

8. REMOVE PARKING BRAKE CABLE ASSY NO.1

(a) Remove the lock nut, adjusting nut, clip and parking brake assy No. 1.

9. REMOVE PARKING BRAKE SWITCH ASSY

(a) Remove the screw and parking brake switch assy.

10. REMOVE TENSION SPRING

11. REMOVE RETURN SPRING DAMPER

12. REMOVE PARKING PEDAL PAD

13. INSTALL PARKING PEDAL PAD

14. INSTALL RETURN SPRING DAMPER

15. INSTALL TENSION SPRING

16. INSTALL PARKING BRAKE SWITCH ASSY

(a) Install the parking brake switch assy with the screw.

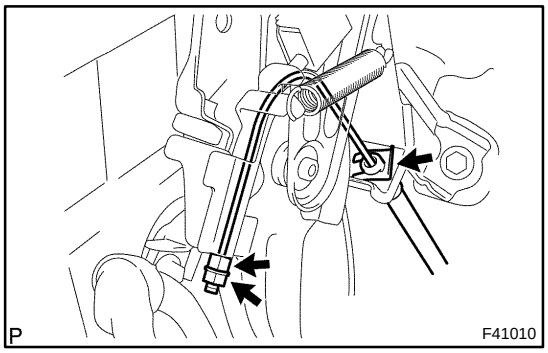

17. INSTALL PARKING BRAKE CABLE ASSY NO.1

(a) Install the parking brake cable assy No.1 with the clip, adjusting nut and lock nut.

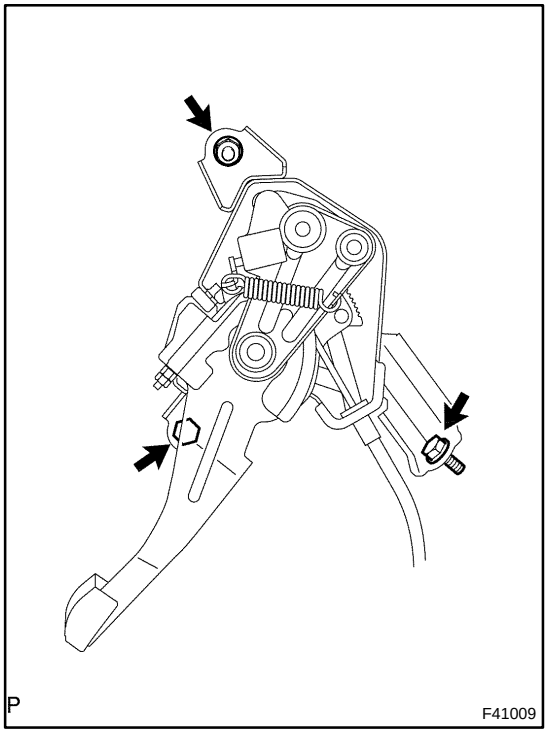

18. INSTALL PARKING BRAKE CONTROL PEDAL ASSY

(a) Install the parking brake control pedal assy with the 2 bolts and nut.
Torque: 39 N·m (398 kgf·cm, 29ft·lbf)

(b) Connect the parking brake switch connector.

19. **INSTALL INSTRUMENT PNL INSERT SUB–ASSY LWR LH**
    (See page 71–12)
20. **INSTALL INSTRUMENT PANEL SUB–ASSY UPPER**
    (See page 71–12)
21. **INSTALL COWL SIDE TRIM SUB–ASSY LH**
    (See page 71–12)
22. **INSTALL FRONT DOOR SCUFF PLATE LH**
    (See page 71–12)
23. **INSTALL COMBINATION METER ASSY**
    (See page 71–12)
24. **INSTALL INSTRUMENT CLUSTER FINISH PANEL**
    (See page 71–12)
25. **INSPECT AND ADJUST PARKING BRAKE PEDAL TRAVEL(See page 33–2)**

PARKING BRAKE CABLE ASSY NO.1

3304W–01

REPLACEMENT

HINT:

COMPONENTS: See page 71–7 and 33–3

1. **REMOVE FRONT DOOR SCUFF PLATE LH(PEDAL TYPE PARKING BRAKE) (See page 71–12)**
2. **REMOVE COWL SIDE TRIM SUB–ASSY LH(PEDAL TYPE PARKING BRAKE) (See page 71–12)**
3. **REMOVE INSTRUMENT PANEL SUB–ASSY UPPER(PEDAL TYPE PARKING BRAKE) (See page 71–12)**
4. **REMOVE INSTRUMENT PNL INSERT SUB–ASSY LWR LH(PEDAL TYPE PARKING BRAKE) (See page 71–12)**
5. **REMOVE CONSOLE PANEL UPPER REAR (See page 71–12)**
6. **REMOVE CONSOLE BOX CARPET (See page 71–12)**
7. **REMOVE RR CONSOLE BOX(See page 71–12)**
8. **REMOVE INSTRUMENT PANEL ASH RECEPTACLE ASSY (See page 71–12)**
9. **REMOVE CONSOLE PANEL UPPER (See page 71–12)**
10. **REMOVE CONSOLE BOX FRONT (See page 71–12)**
11. **REMOVE AIR DUCT REAR NO.1 (See page 71–12)**
12. **REMOVE AIR DUCT REAR NO.2 (See page 71–12)**
13. **REMOVE CONSOLE BOX DUCT NO.1 (See page 71–12)**
14. **REMOVE SHIFT LEVER SHAFT HOUSING ASSY(See page 71–12)**
15. **REMOVE YAWRATE SENSOR(W/ VSC) (See page 32–61)**

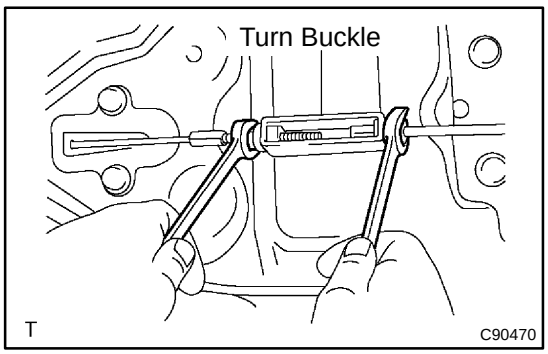

16. **REMOVE PARKING BRAKE CABLE ASSY NO.1(PEDAL TYPE PARKING BRAKE)**

(a) Loosen the turn buckle, disconnect the parking brake cable assy No.1 from the parking brake cable assy No.4.

(b) Remove the 2 bolts and console box mounting bracket No.2.

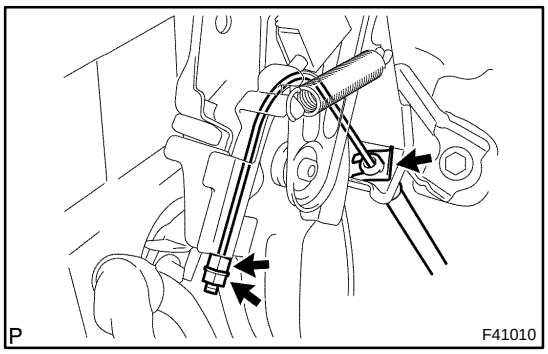

(c) Remove the lock nut, adjusting nut, clip and disconnect the parking brake cable assy No.1 from the parking brake control pedal assy.

(d) Remove the 2 nuts, 2 bolts, clip and parking brake cable assy No.1.

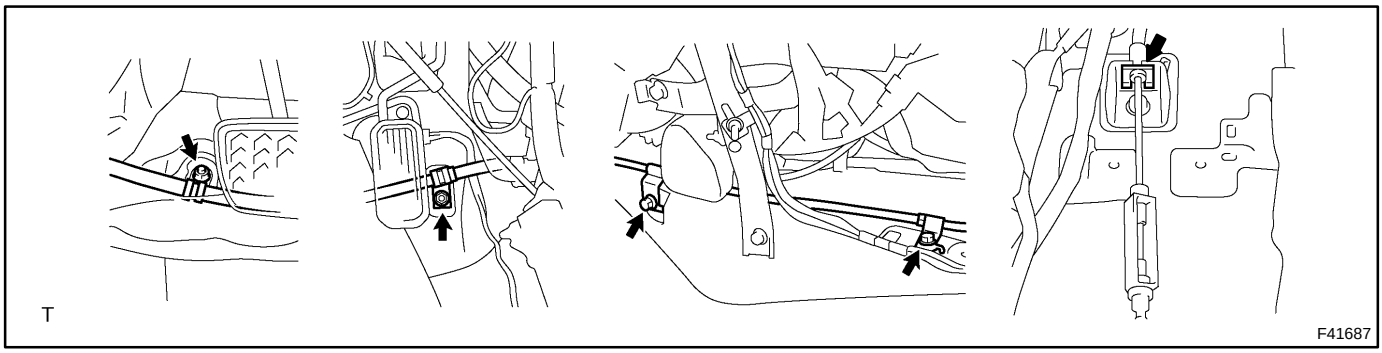

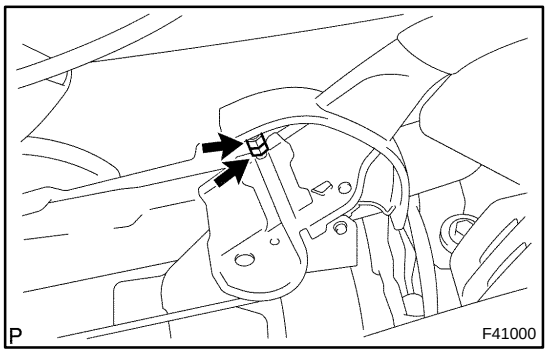

17. REMOVE PARKING BRAKE CABLE ASSY NO.1(LEVER TYPE PARKING BRAKE)

(a) Remove the lock nut and adjusting nut from the parking brake cable assy No.1.

(b) Remove the 2 bolts and console box mounting bracket No.2.

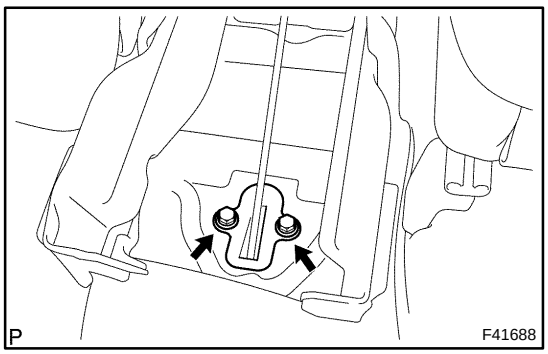

(c) Remove the 2 bolts and separate the parking brake cable No.1 from the parking brake equalizer.

18. INSTALL PARKING BRAKE CABLE ASSY NO.1(PEDAL TYPE PARKING BRAKE)

(a) Install the parking brake cable assy No.1 with the 2 nuts, 2 bolts and clip.

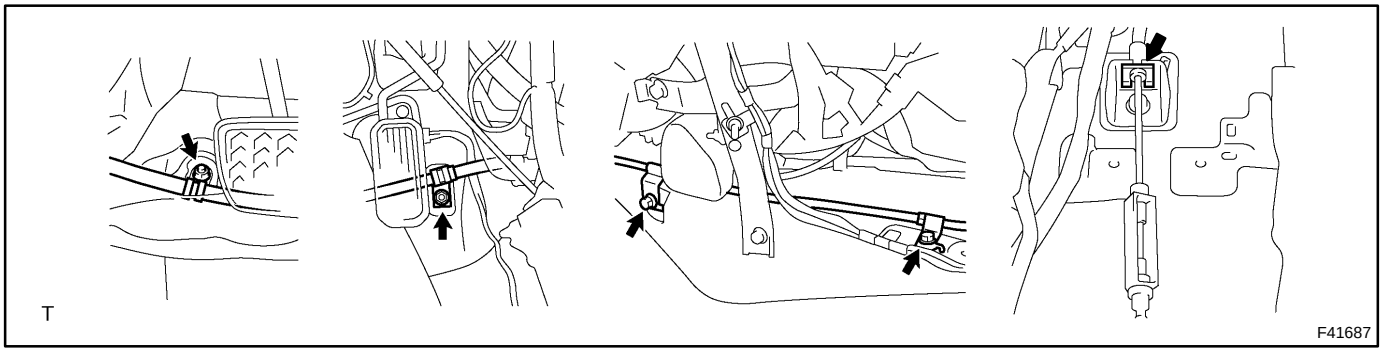

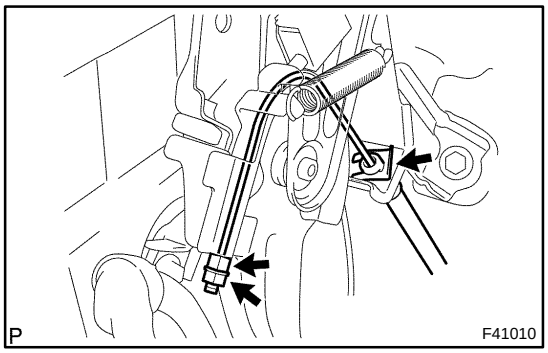

(b) Install the parking brake cable assy No.1 with the clip, adjusting nut and lock nut to the parking brake control pedal assy.
Torque: 5.4 N·m (55 kgf·cm, 48 in.·lbf)

(c) Install the console box mounting bracket No.2 with the 2 bolts.
Torque: 12.5 N·m (128 kgf·cm, 9 ft·lbf)

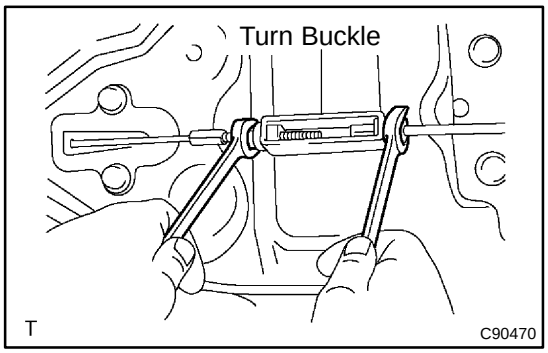

(d) Tighten the turn buckle, connect the parking brake cable assy No. 1 to the parking brake cable assy No.4.
Torque: 5.4 N·m (55 kgf·cm, 48 in.·lbf)

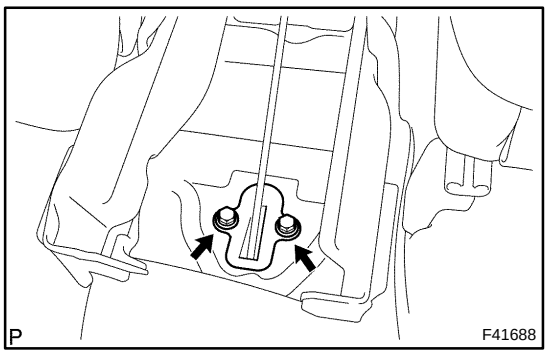

19. INSTALL PARKING BRAKE CABLE ASSY NO.1(LEVER TYPE PARKING BRAKE)

(a) Install the parking brake cable assy No.1 with the 2 bolts to the parking brake equalizer.
Torque: 23 N·m (235 kgf·cm, 17 ft·lbf)

(b) Install the console box mounting bracket No.2 with the 2 bolts.
Torque: 12.5 N·m (128 kgf·cm, 9 ft·lbf)

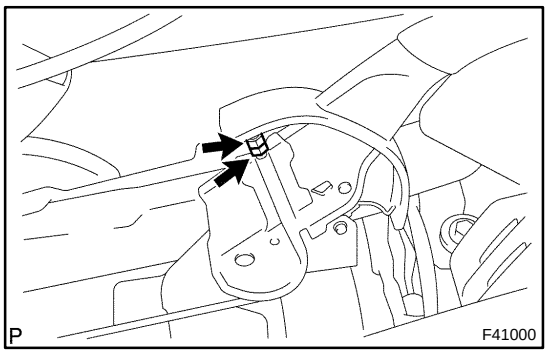

(c) Install the parking brake cable assy No.1 with the adjusting nut and lock nut to the parking brake lever assy.
Torque: 5.0 N·m (51 kgf·cm, 44 in.·lbf)

20. **INSTALL YAWRATE SENSOR(W/ VSC)**
(See page 32–61)
21. **INSTALL SHIFT LEVER SHAFT HOUSING ASSY(See page 71–12)**
22. **INSTALL CONSOLE BOX DUCT NO.1**
(See page 71–12)
23. **INSTALL AIR DUCT REAR NO.2**
(See page 71–12)
24. **INSTALL AIR DUCT REAR NO.1**
(See page 71–12)
25. **INSTALL CONSOLE BOX FRONT**
(See page 71–12)
26. **INSTALL CONSOLE PANEL UPPER**
(See page 71–12)
27. **INSTALL INSTRUMENT PANEL ASH RECEPTACLE ASSY**
(See page 71–12)
28. **INSTALL RR CONSOLE BOX(See page 71–12)**
29. **INSTALL CONSOLE BOX CARPET**
(See page 71–12)
30. **INSTALL CONSOLE PANEL UPPER REAR**
(See page 71–12)
31. **INSTALL INSTRUMENT PNL INSERT SUB–ASSY LWR LH(PEDAL TYPE PARKING BRAKE)**
(See page 71–12)
32. **INSTALL INSTRUMENT PANEL SUB–ASSY UPPER(PEDAL TYPE PARKING BRAKE)**
(See page 71–12)
33. **INSTALL COWL SIDE TRIM SUB–ASSY LH(PEDAL TYPE PARKING BRAKE)**
(See page 71–12)
34. **INSTALL FRONT DOOR SCUFF PLATE LH(PEDAL TYPE PARKING BRAKE)**
(See page 71–12)
35. **INSPECT AND ADJUST PARKING BRAKE PEDAL TRAVEL(PEDAL TYPE PARKING BRAKE)(See page 33–2)**
36. **INSPECT AND ADJUST PARKING BRAKE LEVER TRAVEL(LEVER TYPE PARKING BRAKE)**
(See page 33–2)
37. **PERFORM YAWRATE SENSOR ZERO POINT CALIBRATION(W/ VSC)(See page 05–453)**

PARKING BRAKE CABLE ASSY NO.3

3304X–01

REPLACEMENT

HINT:

- COMPONENTS: See page 33–3
- For parking brake cable No.2, employ the same procedure to the RH side.

1. REMOVE REAR WHEEL

2. SEPARATE REAR DISC BRAKE CALIPER ASSY, LH

(a) Remove the 2 bolts and separate the rear disc brake caliper assy LH.

HINT:

Do not the flexible hose from the brake caliper assy LH.

3. REMOVE REAR BRAKE DRUM SUB–ASSY(DRUM REAR BRAKE TYPE) (See page 32–39)

4. REMOVE REAR DISC(DISC REAR BRAKE TYPE) (See page 33–21)

5. REMOVE PARKING BRAKE SHOE(See page 33–21)

6. REMOVE PARKING BRAKE CABLE HEAT INSULATOR

(a) Remove the 3 nuts and parking brake heat insulator.

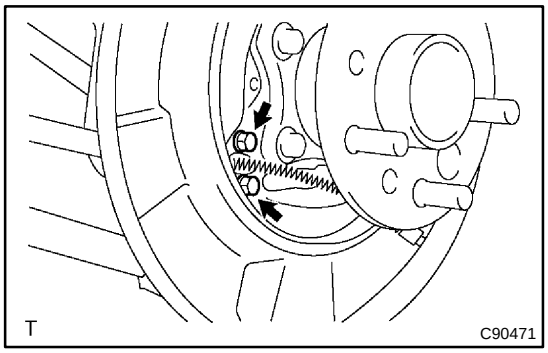

7. REMOVE PARKING BRAKE CABLE ASSY NO.3

(a) Remove the 2 bolts and disconnect the parking brake cable assy No.3 from the backing plate.

(b) Remove the 2 nuts, bolt and parking brake cable assy No.3.

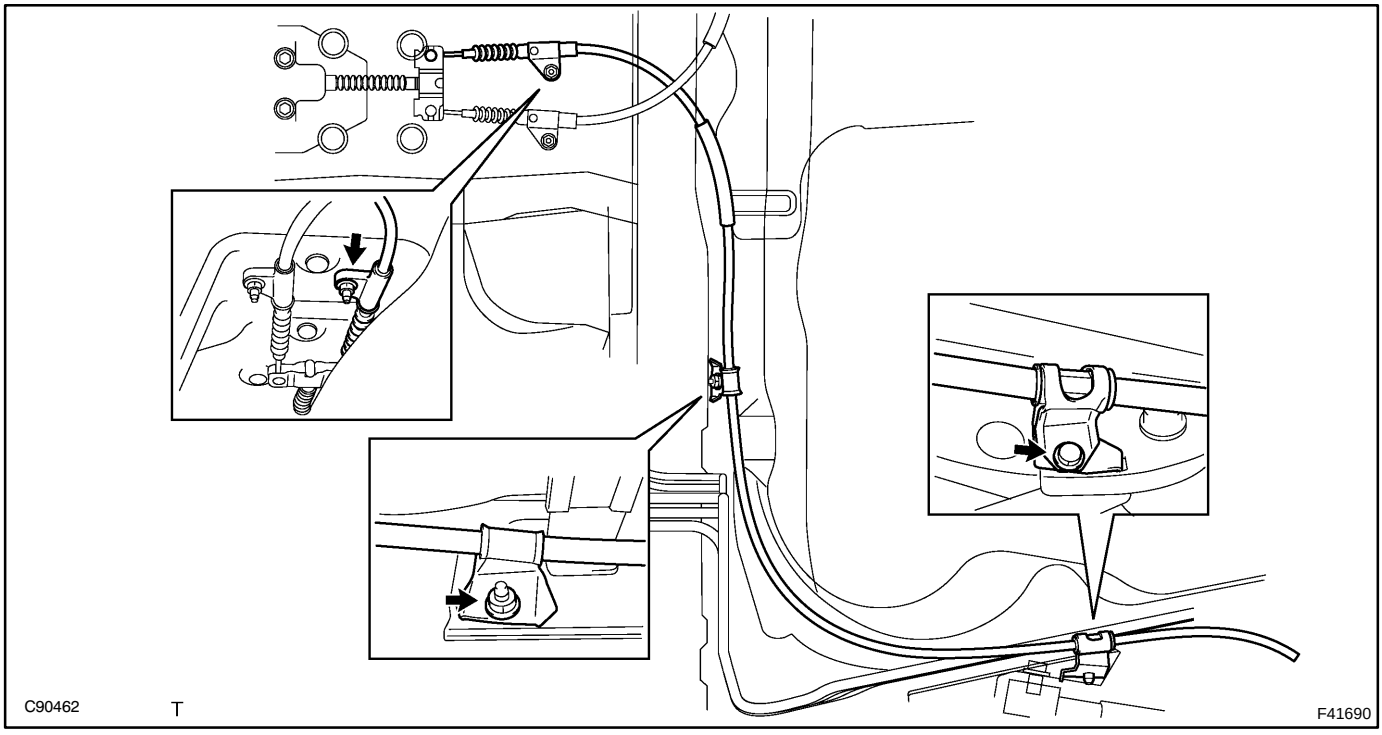

(c) Disconnect the parking brake cable assy No.3 from the parking brake equalizer.

8. INSTALL PARKING BRAKE CABLE ASSY NO.3

(a) Connect the parking brake cable assy No.3 to the parking brake equolizer.

(b) Install the parking brake cable assy No.3 with the 2 nuts and bolt.
Torque: 5.4 N·m (55 kgf·cm, 48 in.·lbf)

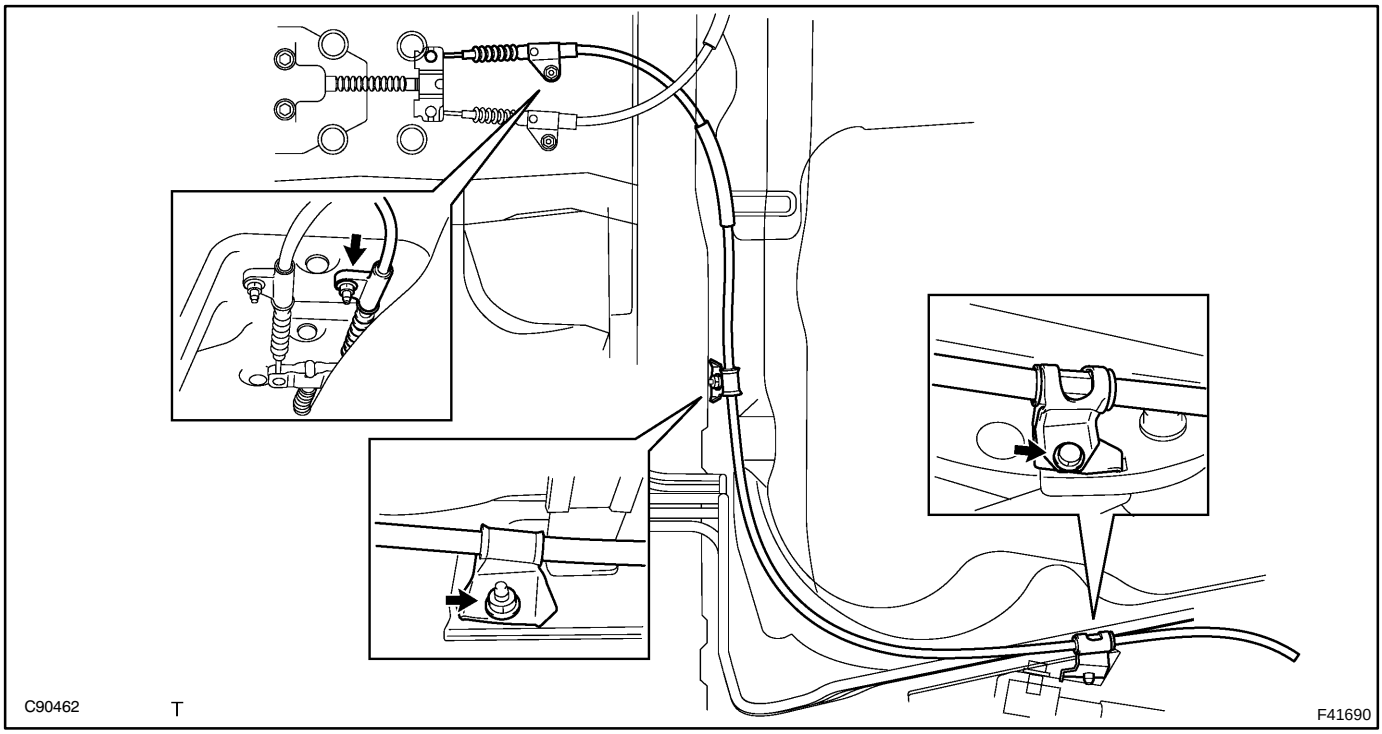

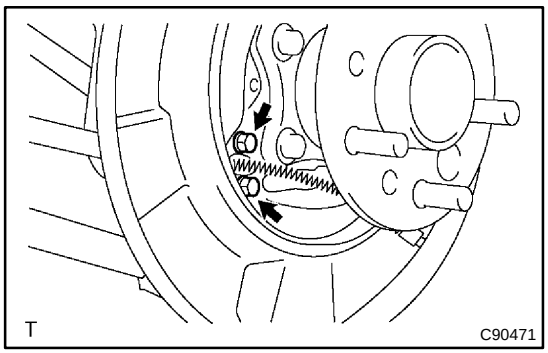

(c) Install the parking brake cable assy No.3 with the 2 bolts to the backing plate.
Torque: 7.8 N·m (80 kgf·cm, 69 in.·lbf)

9. INSTALL PARKING BRAKE CABLE HEAT INSULATOR

(a) Install the parking brake heat insulator with the 3 nuts.
Torque: 5.4 N·m (55 kgf·cm, 48 in.·lbf)

10. APPLICATION HIGH TEMPERATURE GREASE(See page 33–21)

11. INSTALL PARKING BRAKE SHOE(See page 33–21)

12. CHECK PARKING BRAKE INSTALLATION(See page 33–21)

13. INSTALL REAR BRAKE DRUM SUB–ASSY(DRUM REAR BRAKE TYPE) (See page 32–39)

14. INSTALL REAR DISC(DISC REAR BRAKE TYPE)
(See page 33–21)

15. ADJUST PARKING BRAKE SHOE CLEARANCE(See page 33–21)

16. INSTALL REAR DISC BRAKE CALIPER ASSY, LH

(a) Install the rear disc brake caliper with the 2 bolts.
Torque: 47 N·m (480 kgf·cm, 35 ft·lbf)

17. INSTALL REAR WHEEL
Torque: 103 N·m (1,050 kgf·cm, 76 ft·lbf)

18. INSPECT AND ADJUST PARKING BRAKE PEDAL TRAVEL(PEDAL TYPE PARKING BRAKE)(See page 33–2)

19. INSPECT AND ADJUST PARKING BRAKE LEVER TRAVEL(LEVER TYPE PARKING BRAKE)
(See page 33–2)

PARKING BRAKE CABLE ASSY NO.4

3304Y–01

REPLACEMENT

HINT:

COMPONENTS: See page 33–3

1. REMOVE CONSOLE PANEL UPPER REAR
(See page 71–12)

2. REMOVE CONSOLE BOX CARPET
(See page 71–12)

3. REMOVE RR CONSOLE BOX(See page 71–12)

4. REMOVE CONSOLE BOX MOUNTING BRACKET NO.2

(a) Remove the 2 bolts and console box mounting bracket No.2.

5. REMOVE YAWRATE SENSOR(W/ VSC)
(See page 32–61)

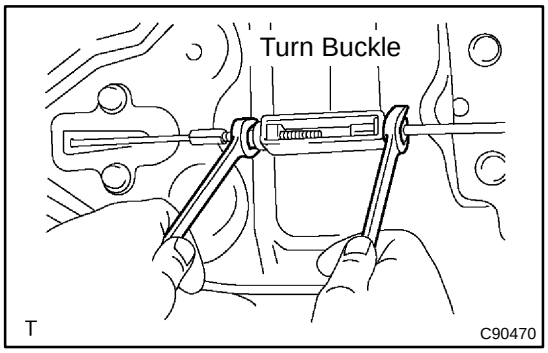

6. REMOVE PARKING BRAKE CABLE ASSY NO.4

(a) Loosen the turn buckle, disconnect the parking brake cable assy No.4 from the parking brake cable assy No.1.

(b) Disconnect the parking brake cable assy No.4 from the parking brake equolizer.

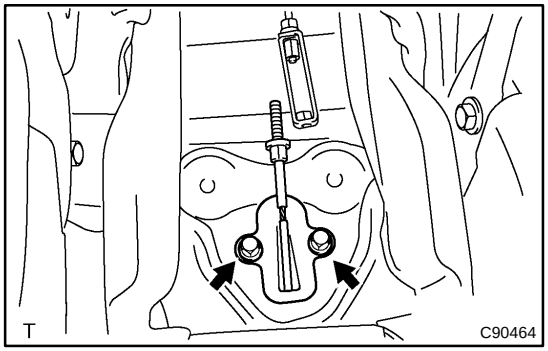

(c) Remove the 2 bolts and parking brake cable assy No.4.

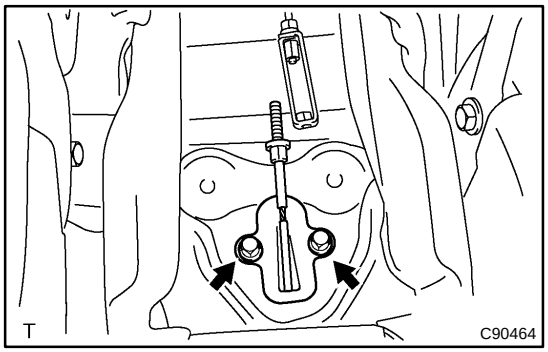

7. INSTALL PARKING BRAKE CABLE ASSY NO.4

(a) Install the parking brake cable No.4 with the 2 bolts.
Torque: 12.5 N·m (128 kgf·cm, 9 ft·lbf)

(b) Connect the parking brake cable assy No.4 to the parking brake equolizer.

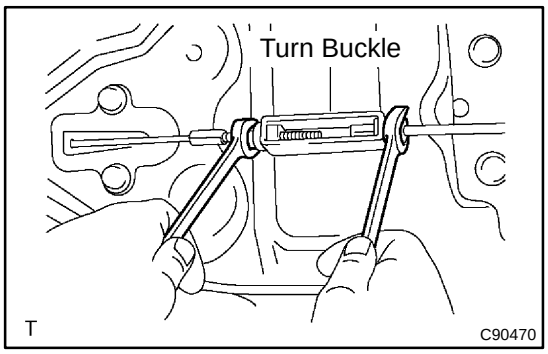

(c) Tighten the turn buckle, connect the parking brake cable assy No.4 to the parking brake cable assy No.1.
Torque: 5.4 N·m (55 kgf·cm, 48 in.·lbf)

8. INSTALL YAWRATE SENSOR(W/ VSC)
(See page 32–61)
9. INSTALL CONSOLE BOX MOUNTING BRACKET NO.2

(a) Install the console box mounting bracket No.2 with the 2 bolts.
Torque: 12.5 N·m (128 kgf·cm, 9 ft·lbf)
10. INSTALL RR CONSOLE BOX(See page 71–12)
11. INSTALL CONSOLE BOX CARPET
(See page 71–12)
12. INSTALL CONSOLE PANEL UPPER REAR
(See page 71–12)
13. INSPECT AND ADJUST PARKING BRAKE PEDAL TRAVEL(See page 33–2)
14. PERFORM YAWRATE SENSOR ZERO POINT CALIBRATION(W/ VSC)(See page 05–452)

PARKING BRAKE ASSY

33050-01

OVERHAUL

HINT:

- COMPONENTS: See page 33-3
- Overhaul the RH side by the same procedures with LH side.

1. REMOVE REAR WHEEL

2. SEPARATE REAR DISC BRAKE CALIPER ASSY, LH

(a) Remove the 2 bolts and separate the rear disc brake caliper assy LH.

HINT:

Do not disconnect the flexible hose from the brake caliper.

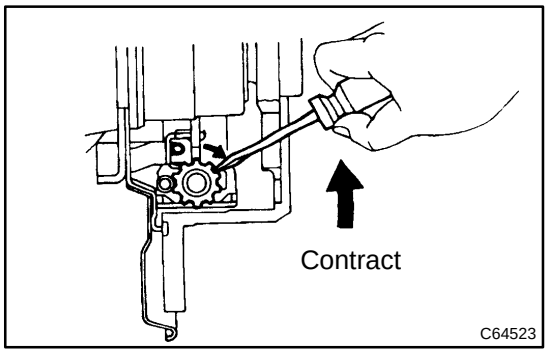

3. REMOVE REAR DISC

(a) Release the parking brake, and remove the rear disc.

HINT:

- Put matchmarks on the disc and the axle hub.
- If the disc cannot be removed easily, turn the shoe adjuster until the wheel turns freely.

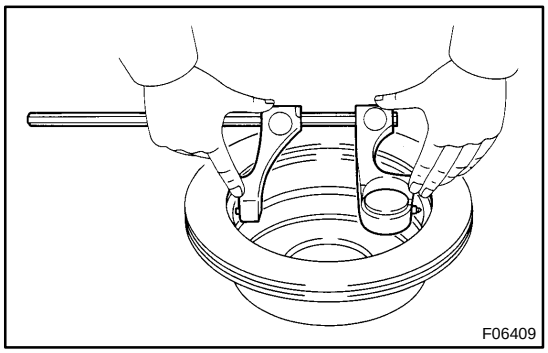

4. INSPECT BRAKE DISC INSIDE DIAMERTER

(a) Using a brake drum gauge or equivalent, measure the inside diameter of the disc.

Standard inside diameter: 170 mm (6.69 in.)
Maximum inside diameter: 171 mm (6.73 in.)

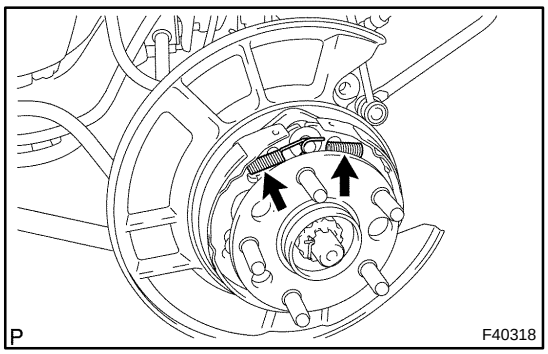

5. REMOVE PARKING BRAKE SHOE RETURN TENSION SPRING

(a) Using a needle-nose pliers, remove the 2 return tension springs.

6. REMOVE PARKING BRAKE SHOE STRUT COMPRESSION SPRING

(a) Slide out the front shoe and remove the compression spring.

7. REMOVE PARKING BRAKE SHOE STRUT LH

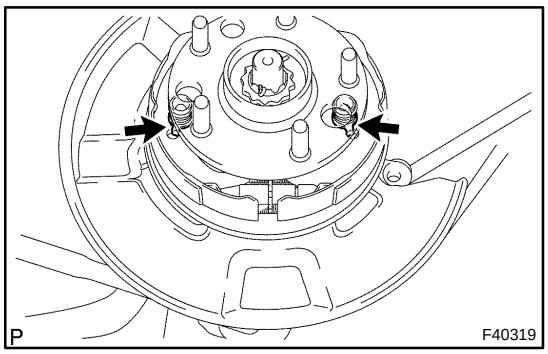

8. REMOVE PARKING BRAKE SHOE

(a) Release the cup claw and remove the front and rear parking brake shoe.
(b) Disconnect the parking brake cable from the shoe lever.
(c) Remove the tension spring and shoe adjuster screw set from the front and rear shoe.
(d) Remove the 2 shoe hold-down springs, 4 cups and 2 pins.

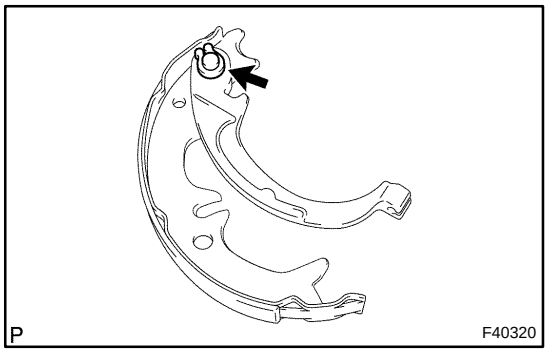

(e) Using a screw driver, remove the C-washer.
(f) Remove the shim and shoe lever from the parking brake shoe.

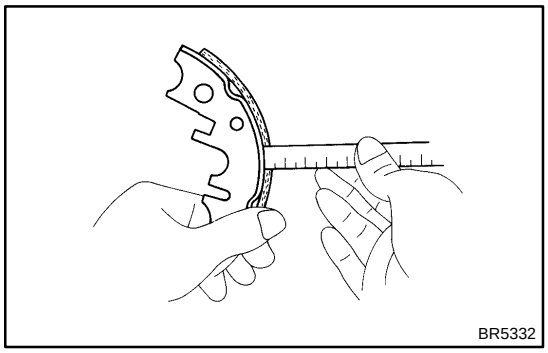

9. INSPECT PARKING BRAKE SHOE LINING THICKNESS

(a) Using a ruler, measure the thickness of the shoe lining.
Standard thickness: 2.0 mm (0.079 in.)
Minimum thickness: 1.0 mm (0.039 in.)

If the lining thickness is at the minimum thickness or less, or if there is severe, uneven wear, replace the brake shoe.

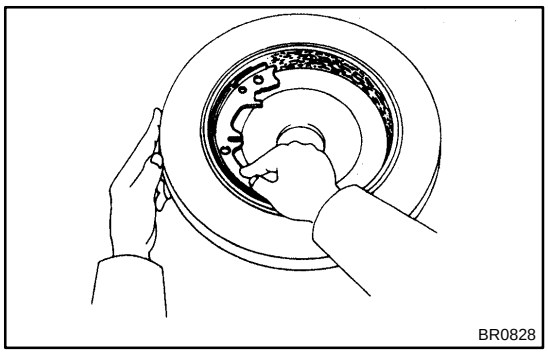

10. INSPECT BRAKE DISC AND PARKING BRAKE SHOE LINING FOR PROPER CONTACT

(a) Apply chalk to the inside surface of the disc, then grind down the brake shoe lining to fit.

If the contact between the brake disc and the shoe lining is improper, repair it using a brake shoe grinder or replace the brake shoe assembly.

11. APPLICATION HIGH TEMPERATURE GREASE

(a) Apply the high temperature grease to the shoe attached surface of backing plate.

12. INSTALL PARKING BRAKE SHOE

(a) Install the shoe lever and shim to the rear shoe with a new C-washer .

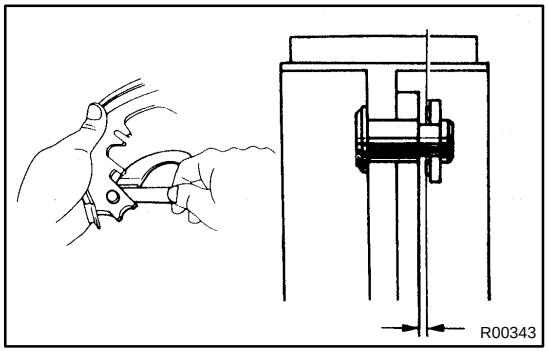

(b) Using a feeler gauge, measure the clearance.
Standard clearance: Less than 0.35 mm (0.0138 in.)

If the clearance is not within the specification, replace the shim with one of the correct size.

Shim Thickness	Shim Thickness
0.3 mm (0.012 in.)	0.9 mm (0.035 in.)
0.6 mm (0.024 in.)	-

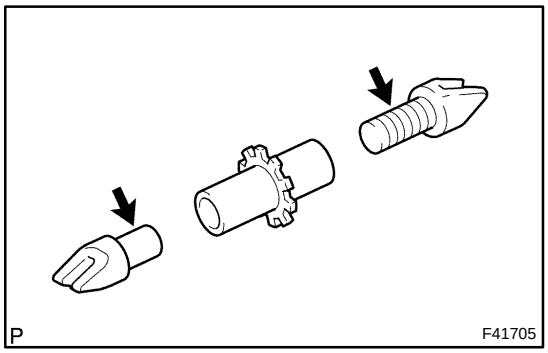

(c) Apply the high temperature grease to the adjusting bolt.
(d) Install the shoe adjusting screw set and tension spring to the front and rear shoe.
(e) Install the 2 pins, 4 cups and 2 shoe hold-down springs.
(f) Connect the parking brake cable to the shoe lever.
(g) Install the front and rear parking brake shoe.

13. INSTALL PARKING BRAKE SHOE STRUT LH

14. INSTALL PARKING BRAKE SHOE STRUT COMPRESSION SPRING

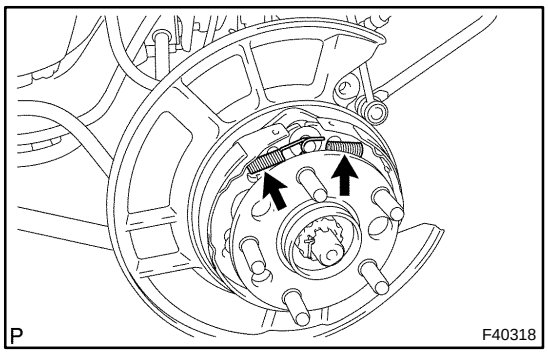

15. INSTALL PARKING BRAKE SHOE RETURN TENSION SPRING

(a) Using a needle nose pliers, install the 2 return tension springs.

16. CHECK PARKING BRAKE INSTALLATION

(a) Check that each part is installed properly.

NOTICE:

There should be no oil or grease adhering to the friction surface of the shoe lining and disc.

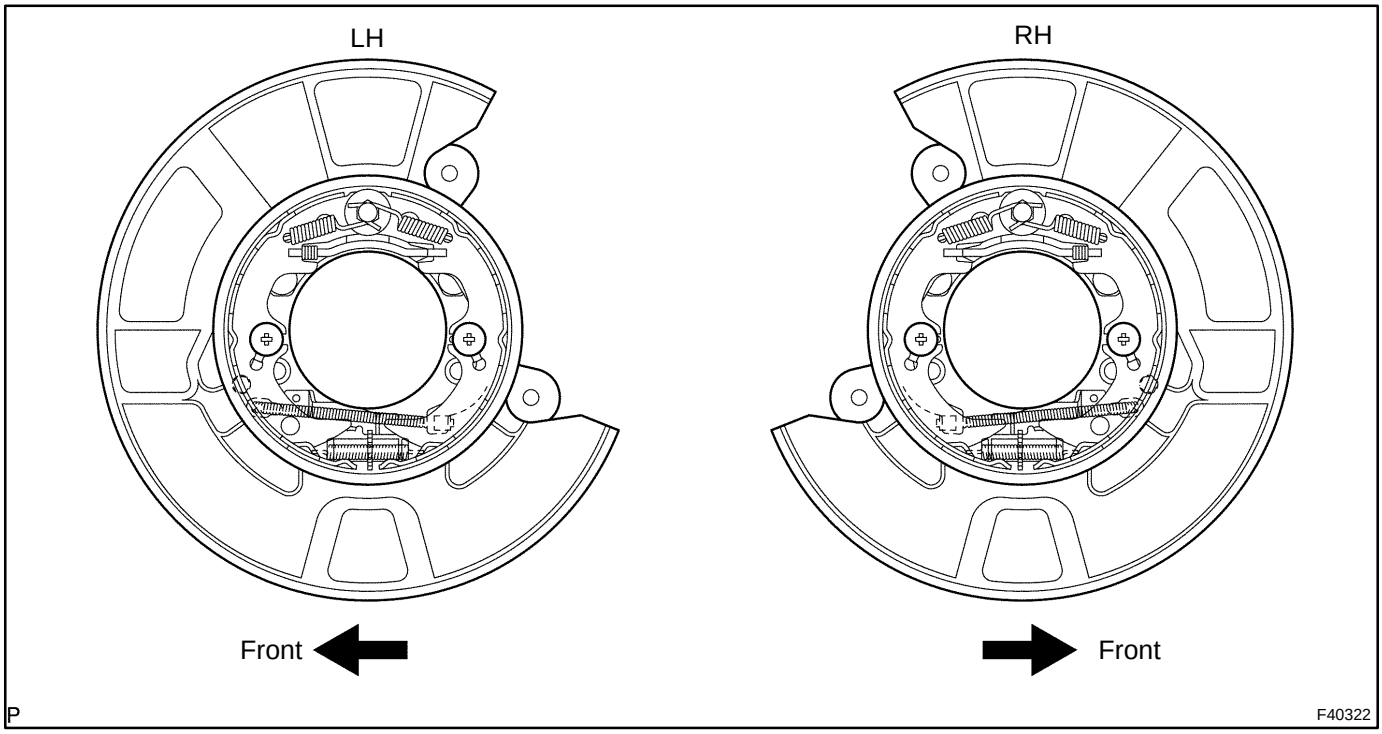

17. INSTALL REAR DISC

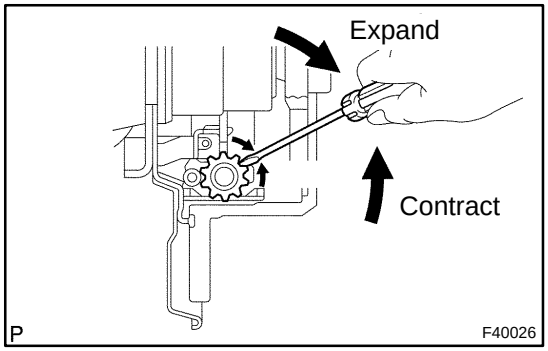

18. ADJUST PARKING BRAKE SHOE CLEARANCE

(a) Temporarily install the hub nuts.

(b) Remove the hole plug, and turn the adjuster and expand the shoes until the disc locks.

(c) Contract the shoe adjuster until the disc can rotate smoothly.

Standard : Return 8 notches

(d) Check shoe is no brake drag.

(e) Install the hole plug.

19. CONNECT REAR DISC BRAKE CALIPER ASSY, LH

(a) Install the rear disc brake caliper with the 2 bolts.

Torque: 47 N·m (480 kgf·cm, 35 ft·lbf)

20. INSTALL REAR WHEEL

Torque: 103 N·m (1,050 kgf·cm, 76 ft·lbf)

21. INSPECT AND ADJUST PARKING BRAKE PEDAL TRAVEL(PEDAL TYPE PARKING BRAKE)(See page 33-2)

22. INSPECT AND ADJUST PARKING BRAKE LEVER TRAVEL(LEVER TYPE PARKING BRAKE) (See page 33-2)

AUTOMATIC TRANSAXLE FLUID

4005R–02

ON–VEHICLE INSPECTION

1. CHECK FLUID LEVEL

HINT:

Drive the vehicle so that the engine and transaxle are at normal operating temperature.

Fluid temperature: 70 – 80 ˚C (158 – 176 ˚F)

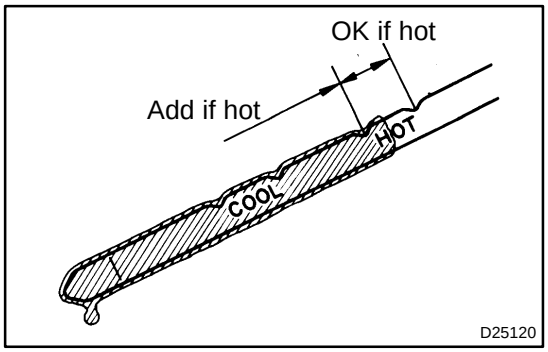

(a) Park the vehicle on a level surface and set the parking brake.
(b) With the engine idling and the brake pedal depressed, shift the shift lever into all positions from P to L position and return to P position.
(c) Take out the dipstick and wipe it clean.
(d) Put it back fully into the pipe.
(e) Take it out and check that the fluid level is in the HOT position.

If there are leaks, it is necessary to repair or replace O–rings, FIPGs, oil seals, plugs or other parts.

AUTOMATIC TRANSAXLE ASSY

4005T–02

PRECAUTION

1. **The automatic transaxle is composed of highly precision–finished parts, necessitating careful inspection before reassembly because even a small nick could cause fluid leakage or affect the performance. The instructions here are organized so that you work on only one component group at a time. This will help to avoid confusion from similar–looking parts of different sub–assemblies being on your workbench at the same time. The component groups are inspected and repaired from the converter housing side. Inspect, repair and reassemble as much as posible before proceeding to the next component group. If a defect is found in a certain component group during reassembly, inspect and repair this group immediately. If a component group cannot be assembled because parts are being ordered, be sure to keep all parts of the group in a separate container while proceeding with disassembly, inspection, repair and reassembly of other component groups.**
   Recommended ATF: T–IV
2. **All disassembled parts should be washed clean and any fluid passages and holes should be blown through with compressed air.**
3. **Dry all parts with compressed air, never use shop rags.**
4. **When using compressed air, always do not aim at yourself to prevent accidentally spraying ATF or kerosene on your face.**
5. **The recommended automatic transaxle fluid or kerosene should be used for cleaning.**
6. **After cleaning, the parts should be arranged in the correct order for efficient inspection, repairs, and reassembly.**
7. **When disassembling a valve body, be sure to match each valve together with the corresponding spring.**
8. **New discs for the brakes and clutches that are to be used for replacement must be soaked in ATF for at least 15 minutes before reassembly.**
9. **All oil seal rings, clutch discs, clutch plates, rotating parts, and sliding surfaces should be coated with ATF prior to reassembly.**
10. **All gaskets and rubber O–rings should be replaced.**
11. **Do not apply adhesive cements to gaskets and similar parts.**
12. **Make sure that the ends of a snap ring are not aligned with one of the cutouts and are installed in the groove correctly.**
13. **When replacing a worn bushing, the sub–assembly containing the bushing must also be replaced.**
14. **Check thrust bearings and races for wear or damage. Replace if necessary.**
15. **Use petroleum jelly to keep parts in place.**
16. **When working with FIPG material, you must perform the following.**
    Using a razor blade and a gasket scraper, remove all the old packing (FIPG) material from the gasket surface.
    Thoroughly clean all components to remove all the material being come off.
    Clean both sealing surfaces with a non–residue solvent.
    Parts must be reassembled within 10 minutes of application. Otherwise, the packing (FIPG) material must be removed and reapplied.

PARK/NEUTRAL POSITION SWITCH ASSY

400FJ–01

REPLACEMENT

1. **REMOVE BATTERY**
2. **REMOVE ENGINE COVER SUB–ASSY NO.1**
3. **REMOVE AIR CLEANER ASSY**
4. **REMOVE AIR CLEANER HOSE NO.1**
5. **REMOVE INTAKE AIR RESONATOR SUB–ASSY**
6. **REMOVE ENGINE UNDER COVER LH**

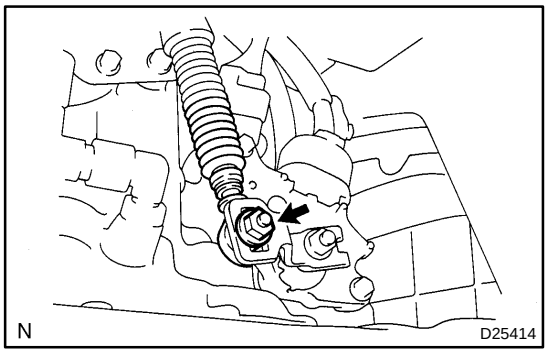

7. **DISCONNECT TRANSMISSION CONTROL CABLE ASSY**

(a) Remove the nut from the control shaft lever.
(b) Disconnect the control cable from the control shaft lever.

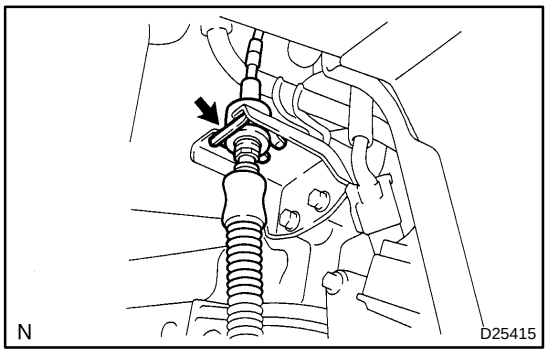

(c) Remove the clip and disconnect the control cable from the control cable bracket.

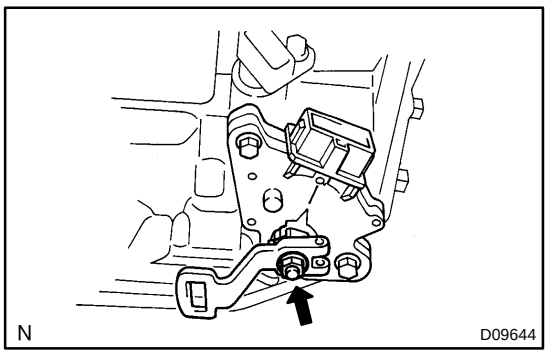

8. **REMOVE PARK/NEUTRAL POSITION SWITCH ASSY**

(a) Disconnect the park/neutral position switch connector.
(b) Remove the nut, washer and control shaft lever.

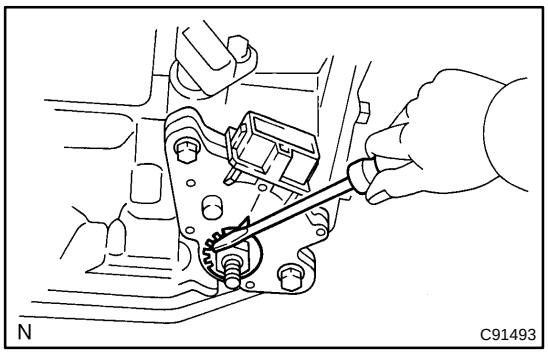

(c) Pry out the lock plate.

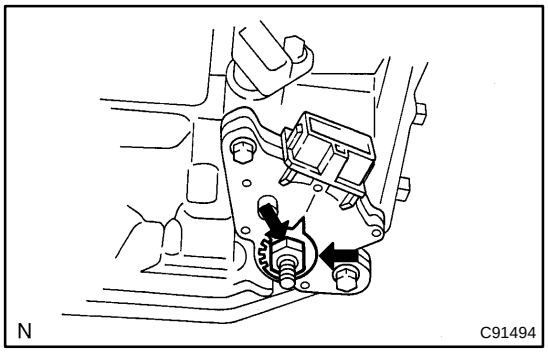

(d) Remove the lock nut and lock plate.

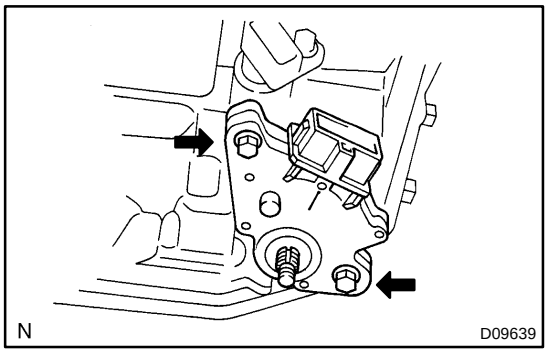

(e) Remove the 2 bolts and pull out the park/neutral position switch.

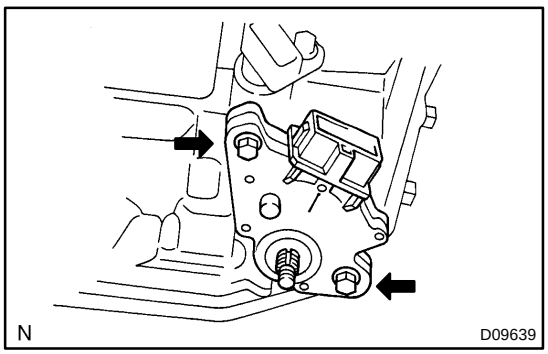

9. INSTALL PARK/NEUTRAL POSITION SWITCH ASSY

(a) Install the park/neutral position switch to the manual valve shaft.
(b) Temporarily install the 2 bolts.
(c) Place a new lock plate and tighten the nut.
Torque: 6.9 N·m (70 kgf·cm, 61 in.·lbf)
(d) Temporarily install the control shaft lever.

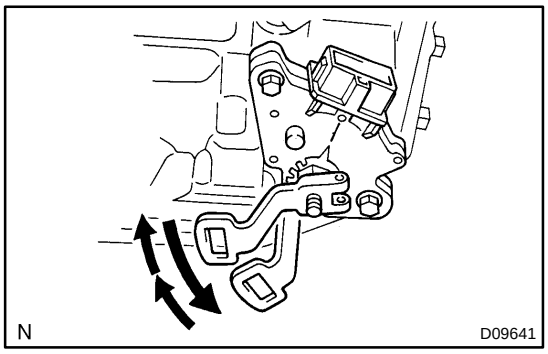

(e) Turn the lever counterclockwise until it stops, then turn it clockwise 2 notches.
(f) Remove the control shaft lever.

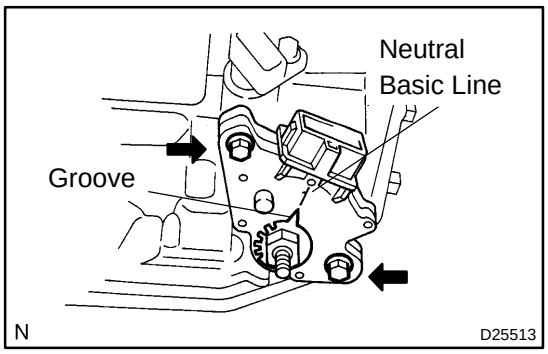

(g) Align the groove with neutral basic line.
(h) Hold the switch in position and tighten the 2 bolts.
Torque: 5.4 N·m (55 kgf·cm, 48 in.·lbf)

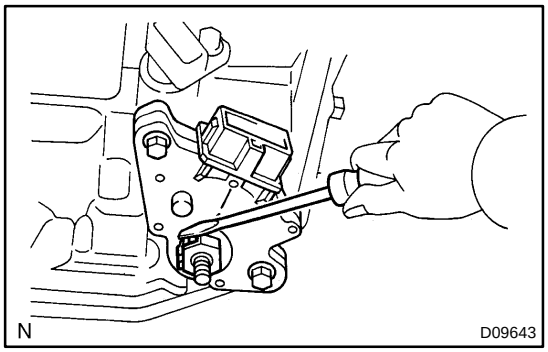

(i) Using a screwdriver, stake the nut with the lock plate.

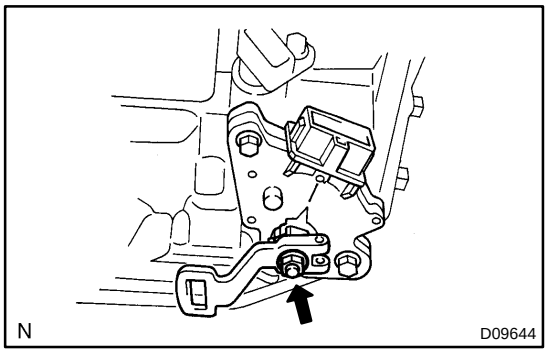

(j) Install the control shaft lever, washer and nut.
Torque: 12.7 N·m (130 kgf·cm, 9 ft·lbf)

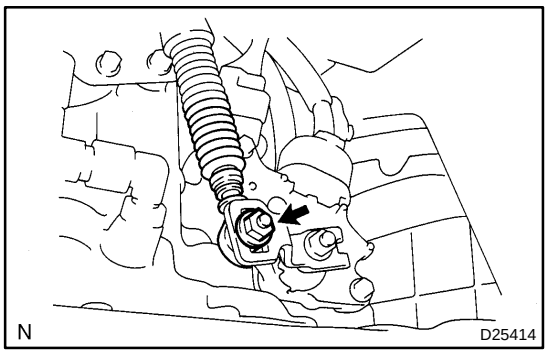

10. INSTALL TRANSMISSION CONTROL CABLE ASSY
(a) Temporarily install the control cable to the control shaft lever with the nut.

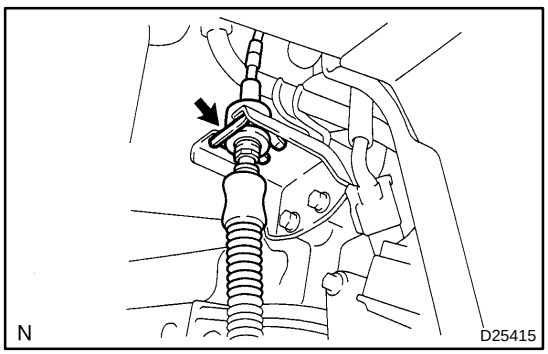

(b) Install the control cable and a new clip to the bracket.
(c) Connect the park/neutral position switch connector.

11. ADJUST SHIFT LEVER POSITION(See page 40–47)
12. INSPECT SHIFT LEVER POSITION(See page 40–47)
13. INSPECT PARK/NEUTRAL POSITION SWITCH ASSY (See page 40–7)
14. INSTALL ENGINE UNDER COVER LH
15. INSTALL INTAKE AIR RESONATOR SUB–ASSY
16. INSTALL AIR CLEANER HOSE NO.1
17. INSTALL AIR CLEANER ASSY
18. INSTALL ENGINE COVER SUB–ASSY NO.1
19. INSTALL BATTERY

4005Z–02

ADJUSTMENT

1. INSPECT PARK/NEUTRAL POSITION SWITCH ASSY

(a) Apply the parking brake and turn the ignition switch to ON.
(b) Depress the brake pedal and check that the engine starts only when the shift lever is set in N or P position.
(c) Check that the back–up light is lit and the reverse warning buzzer sounds only when the shift lever is set in R position.

If a failure is found, check the park/neutral position switch for continuity.

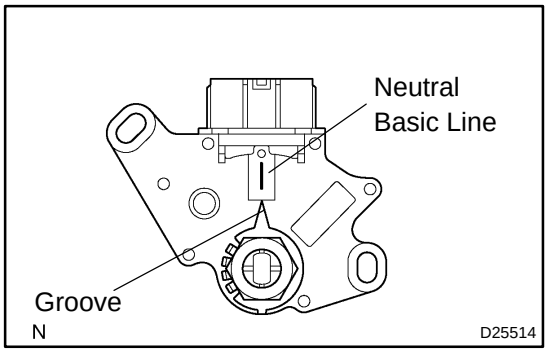

2. ADJUST PARK/NEUTRAL POSITION SWITCH ASSY

(a) Loosen the 2 bolts of park/neutral position switch and set the shift lever to the N position.
(b) Align the groove with neutral basic line.
(c) Hold the switch in position and tighten the 2 bolts.
Torque: 5.4 N·m (55 kgf·cm, 48 in.·lbf)
(d) After adjustment, perform the inspection described in step 1.

AUTOMATIC TRANSAXLE ASSY (1MZ–FE)

40061–02

REPLACEMENT

1. **REMOVE ENGINE ASSEMBLY WITH TRANSAXLE(See page 14–155)**
2. **REMOVE FRONT DRIVE SHAFT ASSY RH (See page 30–8)**
3. **REMOVE FRONT DRIVE SHAFT ASSY LH (See page 30–8)**

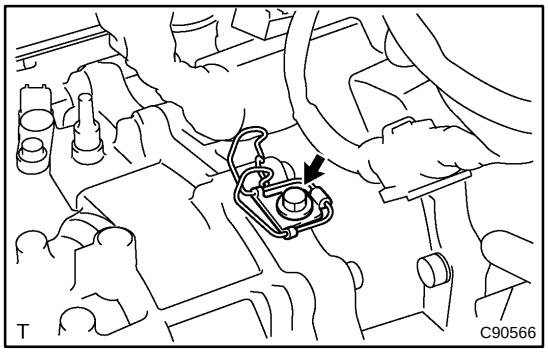

4. REMOVE TRANSMISSION CONTROL CABLE BRACKET NO.2

(a) Remove the bolt and transmission control cable bracket No.2.

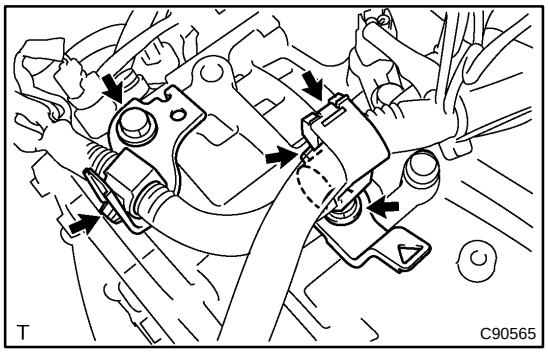

5. REMOVE WIRE HARNESS CLAMP

(a) Disconnect the wire harness from the clamps.
(b) Remove the 2 bolts and 2 clamps.

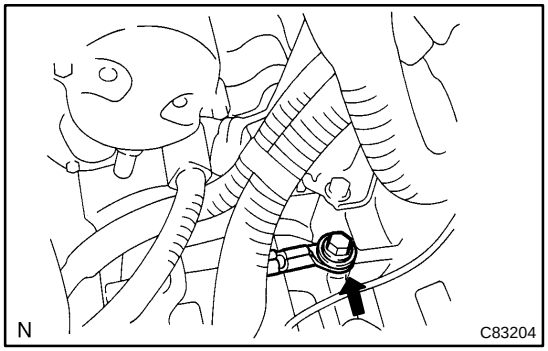

6. DISCONNECT WIRE HARNESS

(a) Remove the bolt and wire harness.

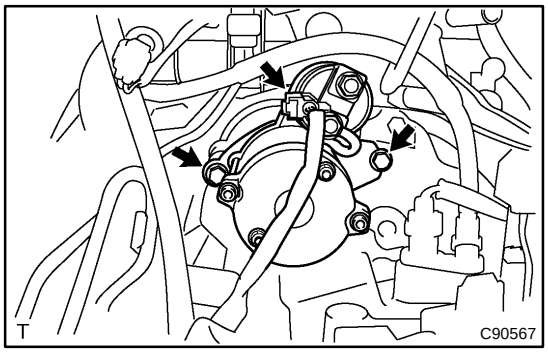

7. REMOVE STARTER ASSY

(a) Disconnect the connector.
(b) Remove the 2 bolts and starter assy.

8. DISCONNECT CONNECTOR

(a) Disconnect the transmission wire connector.
(b) Disconnect the park/neutral position switch connector.
(c) Disconnect the 2 speed sensor connectors.

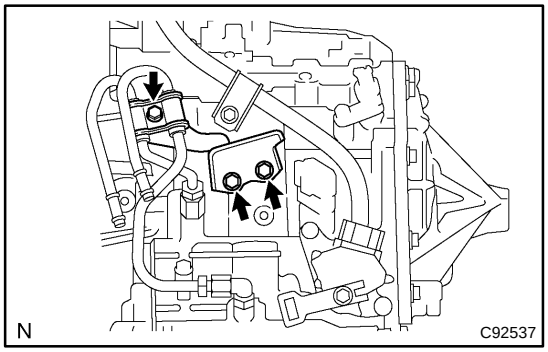

9. REMOVE TRANSMISSION CONTROL CABLE BRACKET NO.1

(a) Remove the bolt and oil cooler tube clamp.
(b) Remove the 2 bolts and transmission control cable bracket No.1.

10. REMOVE TRANSMISSION OIL FILLER TUBE SUB–ASSY

(a) Remove the ATF level gauge.
(b) Disconnect the wire harness clamp from the oil filler tube and remove the bolt and oil filler tube.
(c) Remove the O–ring from the oil filler tube.

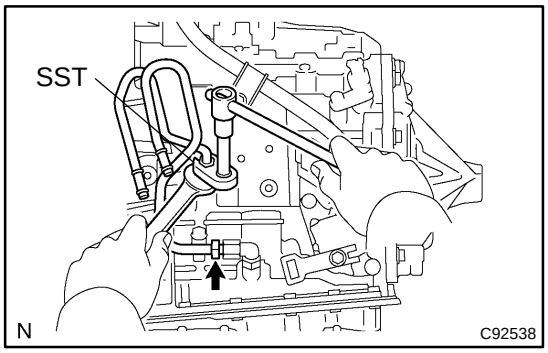

11. REMOVE OIL COOLER INLET TUBE NO.1

(a) Using SST and spanner, disconnect the oil cooler inlet tube No.1.
SST 09023–12700

12. REMOVE OIL COOLER OUTLET TUBE NO.1

(a) Using SST and spanner, disconnect the oil cooler outlet tube No.1.
SST 09023–12700

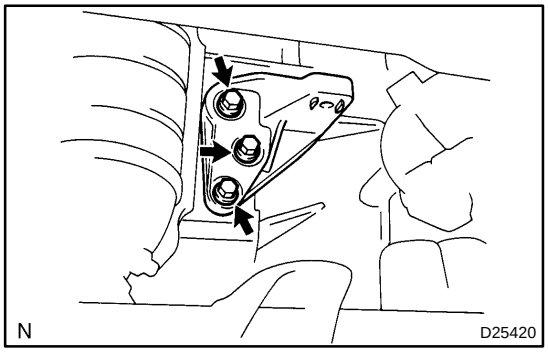

13. REMOVE TRANSVERSE ENGINE ENGINE MOUNTING BRACKET

(a) Remove the 3 bolts and engine mounting bracket FR.

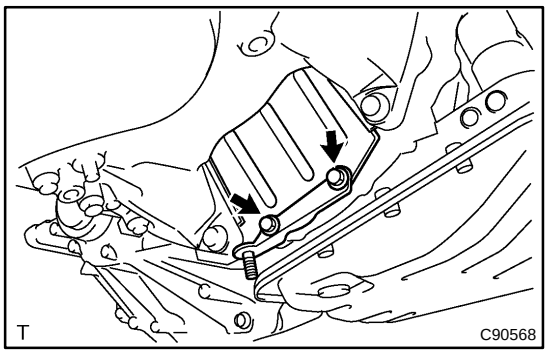

14. REMOVE FLYWHEEL HOUSING UNDER COVER

(a) Remove the 2 bolts and flywheel housing under cover.

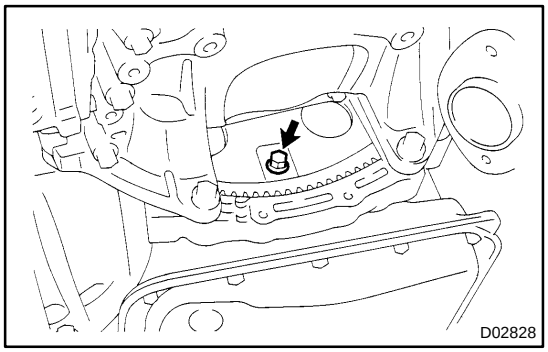

15. REMOVE AUTOMATIC TRANSAXLE ASSY

(a) Turn the crankshaft to gain access and remove the 6 bolts while holding the crankshaft pulley bolt with a wrench.

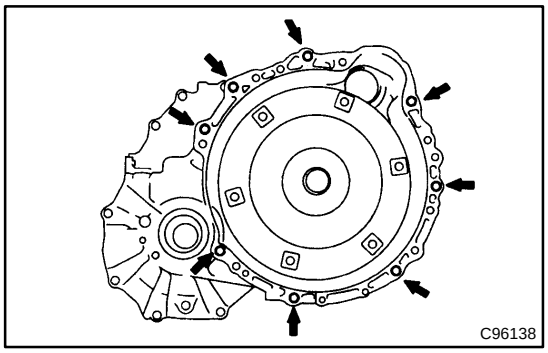

(b) Remove the 8 bolts.

(c) Separate and remove the automatic transaxle.

16. REMOVE TORQUE CONVERTER CLUTCH ASSY

17. INSPECT TORQUE CONVERTER CLUTCH ASSY
(See page 40–20)

SST 09350–32014 (09351–32010, 09351–32020)

18. INSTALL TORQUE CONVERTER CLUTCH ASSY

(a) Install the torque converter clutch to the automatic transaxle.

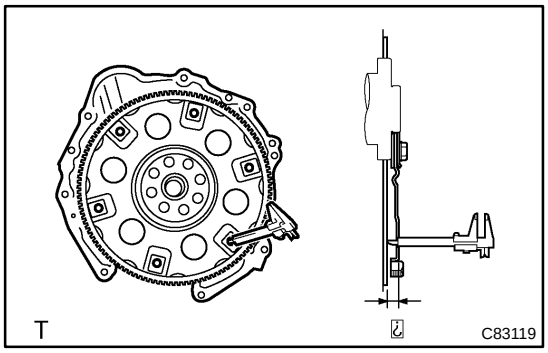

(b) Using vernier calipers, measure the dimension ”A” between the transaxle fitting part and the converter fitting part of the drive plate.

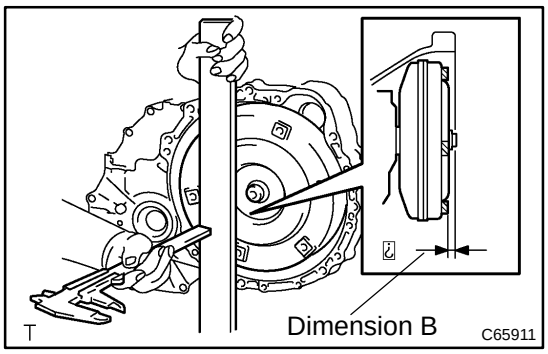

(c) Using vernier calipers and a straight edge, measure the dimension ”B” shown in the illustration and check that ”B” is greater than ”A” measured in (b).
Standard: A + 1 mm or more

NOTICE:
Do not add the thickness of straight edge.

19. INSTALL AUTOMATIC TRANSAXLE ASSY

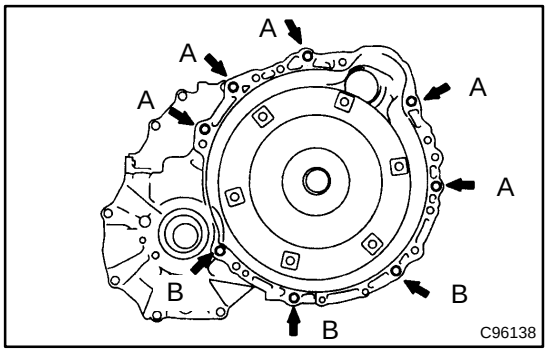

(a) Install the automatic transaxle and 8 bolts to the engine.
Torque:
Bolt A: 64 N·m (650 kgf·cm, 47 ft·lbf)
Bolt B: 44 N·m (449 kgf·cm, 32 ft·lbf)

(b) Apply a few drops of adhesive to each 2 threads on the tip of the 6 torque converter clutch mounting bolts.
Adhesive: Part No. 08833–00070, THREE BOND 1324 or equivalent

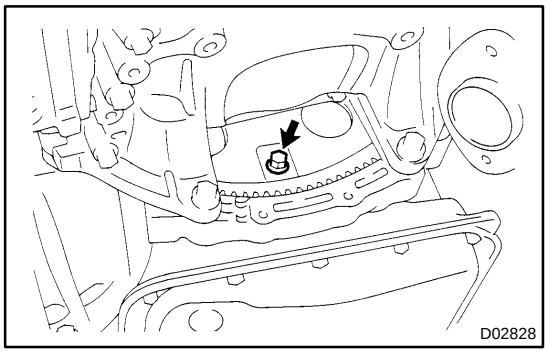

(c) Install the 6 torque converter clutch mounting bolts.
Torque: 41 N·m (420 kgf·cm, 30 ft·lbf)

HINT:
First install green colored bolt and then the 5 bolts.

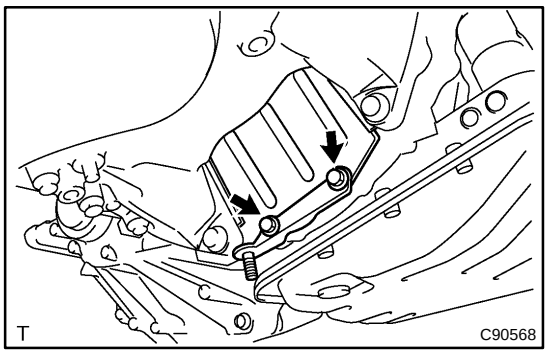

20. INSTALL FLYWHEEL HOUSING UNDER COVER

(a) Install the flywheel housing under cover and 2 bolts.
Torque: 8.0 N·m (82 kgf·cm, 71 in.·lbf)

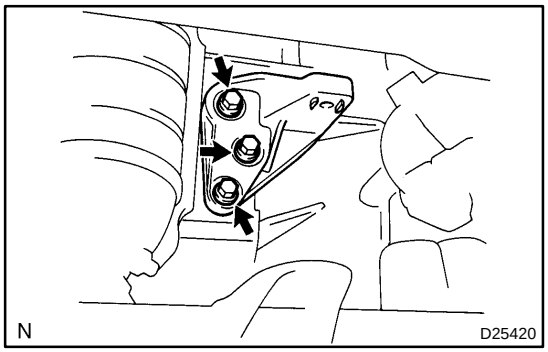

21. INSTALL TRANSVERSE ENGINE ENGINE MOUNTING BRACKET

(a) Install the engine mounting bracket FR and 3 bolts to the automatic transaxle.
Torque: 64 N·m (653 kgf·cm, 47 ft·lbf)

22. INSTALL TRANSMISSION OIL FILLER TUBE SUB–ASSY

(a) Coat a new O–ring with ATF, and install them to the oil filler tube.
(b) Install the oil filler tube and bolt to the automatic transaxle.
Torque: 5.5 N·m (56 kgf·cm, 49 in.·lbf)
(c) Connect the wire harness clamp to the oil filler tube.
(d) Install the ATF level gauge.

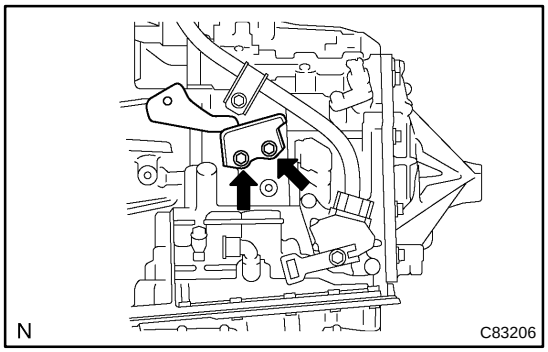

23. INSTALL TRANSMISSION CONTROL CABLE BRACKET NO.1

(a) Install the control cable bracket No.1 and 2 bolts.
Torque: 11.8 N·m (122 kgf·cm, 9 ft·lbf)

24. INSTALL OIL COOLER INLET TUBE NO.1

(a) Temporarily install the oil cooler outlet tube No.1.
(b) Temporarily install the oil cooler inlet tube No.1.

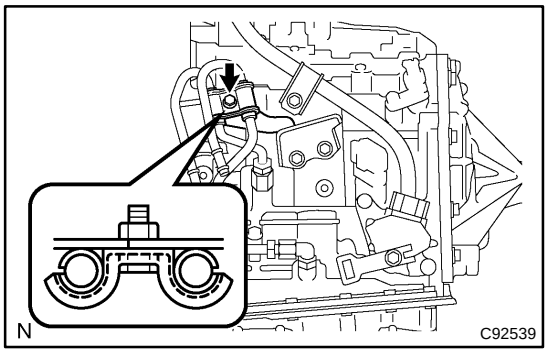

(c) Install the oil cooler tube clamp and bolt.
Torque: 5.4 N·m (55 kgf·cm, 48 in.·lbf)

HINT:
Install them so that the oil cooler tube cushion is positioned as being illustrated.

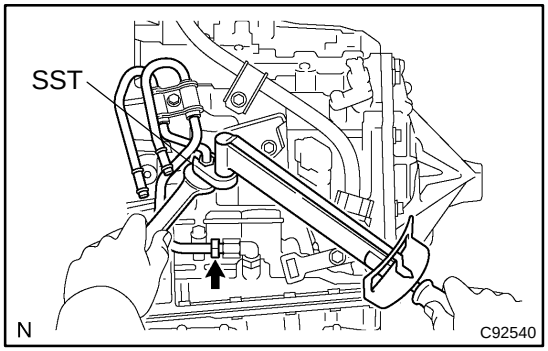

(d) Using SST and spanner, tighten the oil cooler inlet tube No.1.
SST 09023–12700
Torque: 34.3 N·m (350 kgf·cm, 25 ft·lbf)

25. INSTALL OIL COOLER OUTLET TUBE NO.1

(a) Using SST and spanner, tighten the oil cooler outlet tube No.1 .
SST 09023–12700
Torque: 34.3 N·m (350 kgf·cm, 25 ft·lbf)

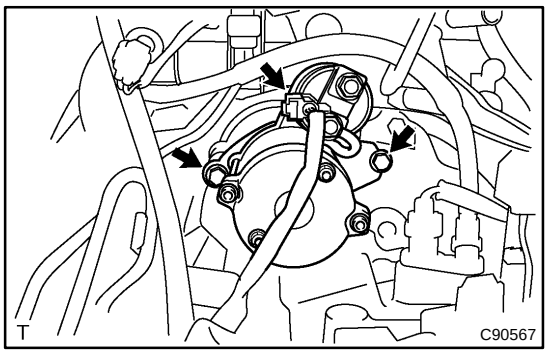

26. INSTALL STARTER ASSY

(a) Install the starter assy and 2 bolts.
Torque: 37 N·m (377 kgf·cm, 27 ft·lbf)
(b) Connect the connecter.

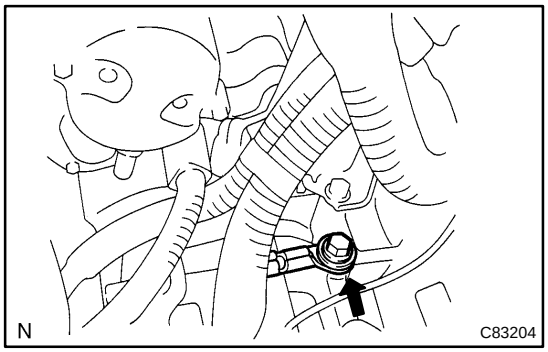

27. INSTALL WIRE HARNESS
(a) Install the wire harness and bolt.
Torque: 25.5 N·m (260 kgf·cm, 19 ft·lbf)

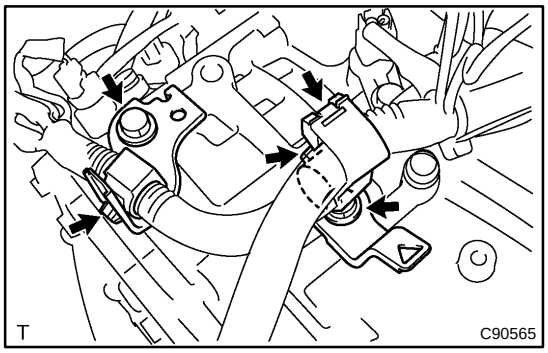

28. INSTALL WIRE HARNESS CLAMP
(a) Install the 2 clamps and 2 bolts.
Torque: 8.4 N·m (86 kgf·cm, 74 in.·lbf)
(b) Connect the wire harness to the clamps.

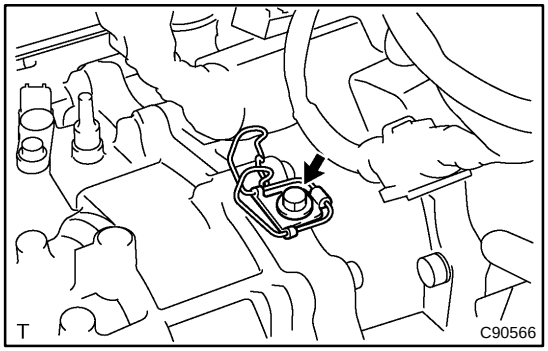

29. INSTALL TRANSMISSION CONTROL CABLE BRACKET NO.2

(a) Install the transmission control cable bracket No.2 with the bolt.
Torque: 11.8 N·m (122 kgf·cm, 9 ft·lbf)

30. INSTALL FRONT DRIVE SHAFT ASSY LH
(See page 30–8)
31. INSTALL FRONT DRIVE SHAFT ASSY RH
(See page 30–8)
32. INSTALL ENGINE ASSEMBLY WITH TRANSAXLE(See page 14–155)

AUTOMATIC TRANSAXLE ASSY (2AZ–FE)

400FK–01

REPLACEMENT

1. **REMOVE ENGINE ASSEMBLY WITH TRANSAXLE(See page 14–22)**
2. **REMOVE FRONT DRIVE SHAFT ASSY RH (See page 30–8)**
3. **REMOVE FRONT DRIVE SHAFT ASSY LH (See page 30–8)**

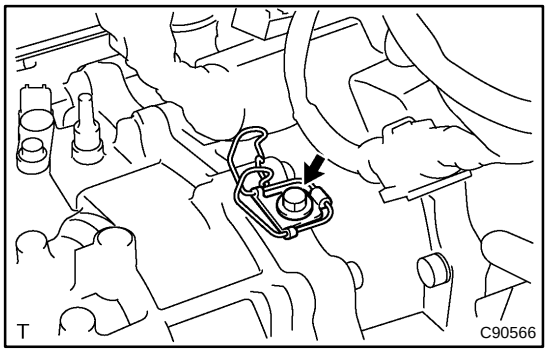

4. REMOVE TRANSMISSION CONTROL CABLE BRACKET NO.2

(a) Remove the bolt and transmission control cable bracket No.2.

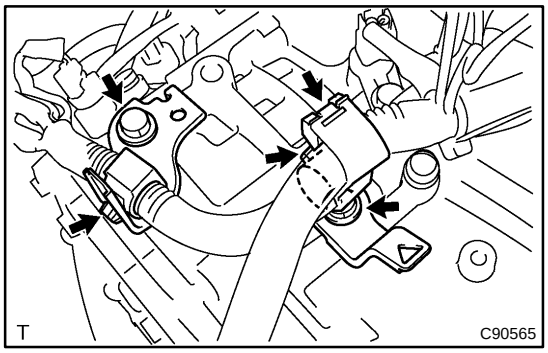

5. REMOVE WIRE HARNESS CLAMP

(a) Disconnect the wire harness from the clamps.
(b) Remove the 2 bolts and 2 clamps.

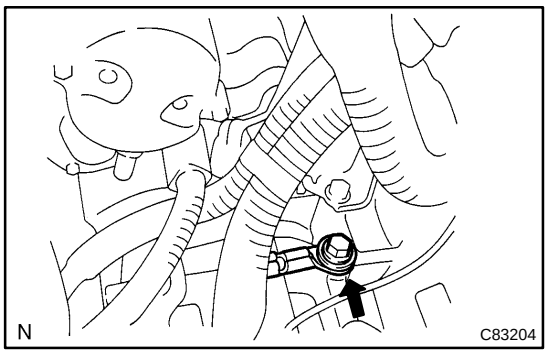

6. DISCONNECT WIRE HARNESS

(a) Remove the bolt and wire harness.

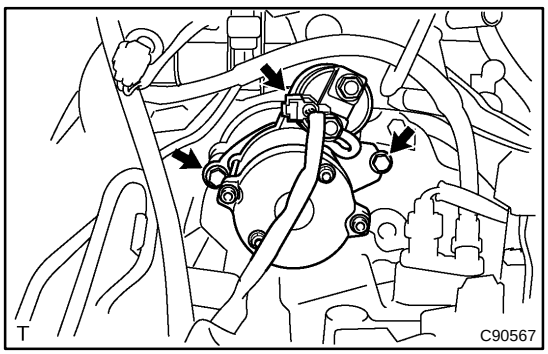

7. REMOVE STARTER ASSY

(a) Disconnect the connector.
(b) Remove the 2 bolts and starter assy.

8. DISCONNECT CONNECTOR

(a) Disconnect the transmission wire connector.
(b) Disconnect the park/neutral position switch connector.
(c) Disconnect the 2 speed sensor connectors.

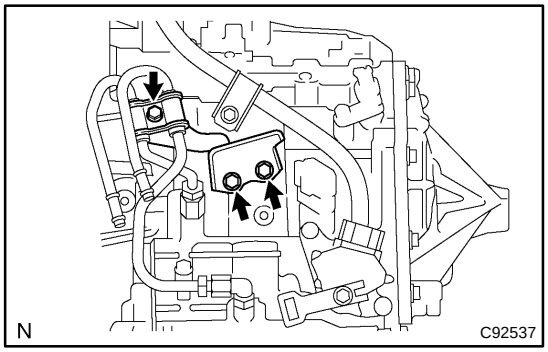

9. REMOVE TRANSMISSION CONTROL CABLE BRACKET NO.1

(a) Remove the bolt and oil cooler tube clamp.
(b) Remove the 2 bolts and transmission control cable bracket No.1.

10. REMOVE TRANSMISSION OIL FILLER TUBE SUB–ASSY

(a) Remove the ATF level gauge.
(b) Disconnect the wire harness clamp from the oil filler tube and remove the bolt and oil filler tube.
(c) Remove the O–ring from the oil filler tube.

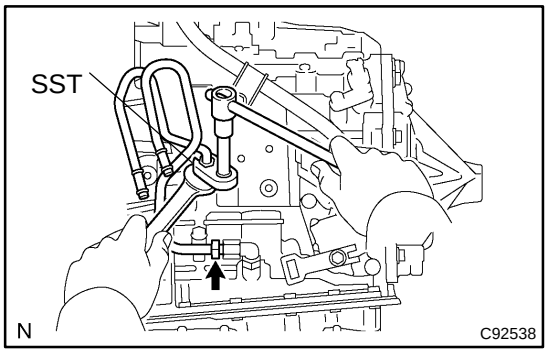

11. REMOVE OIL COOLER INLET TUBE NO.1

(a) Using SST and spanner, disconnect the oil cooler inlet tube No.1.
SST 09023–12700

12. REMOVE OIL COOLER OUTLET TUBE NO.1

(a) Using SST and spanner, disconnect the oil cooler outlet tube No.1.
SST 09023–12700

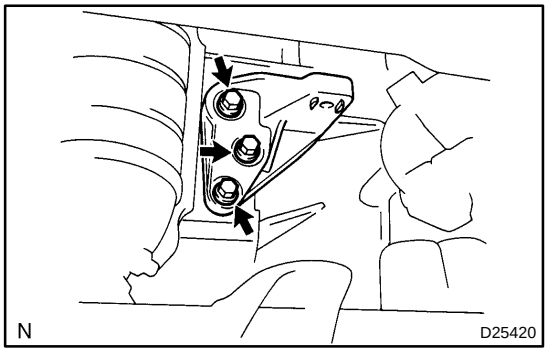

13. REMOVE TRANSVERSE ENGINE ENGINE MOUNTING BRACKET

(a) Remove the 3 bolts and engine mounting bracket FR.

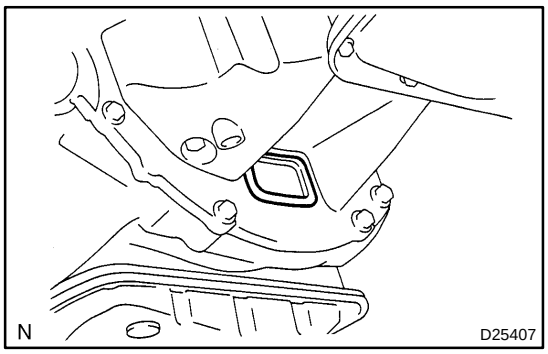

14. REMOVE FLYWHEEL HOUSING UNDER COVER

(a) Remove the flywheel housing under cover.

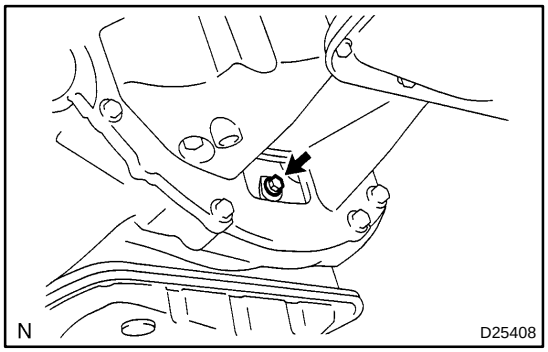

15. REMOVE AUTOMATIC TRANSAXLE ASSY

(a) Remove the 6 bolts while holding the crankshaft pulley bolt with a wrench.

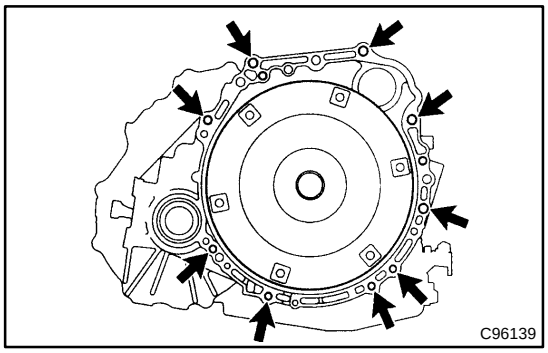

(b) Remove the 9 bolts.
(c) Separate and remove the automatic transaxle.

16. REMOVE TORQUE CONVERTER CLUTCH ASSY

17. INSPECT TORQUE CONVERTER CLUTCH ASSY
(See page 40–20)
SST 09350–32014 (09351–32010, 09351–32020)

18. INSTALL TORQUE CONVERTER CLUTCH ASSY

(a) Install the torque converter clutch to the automatic transaxle.

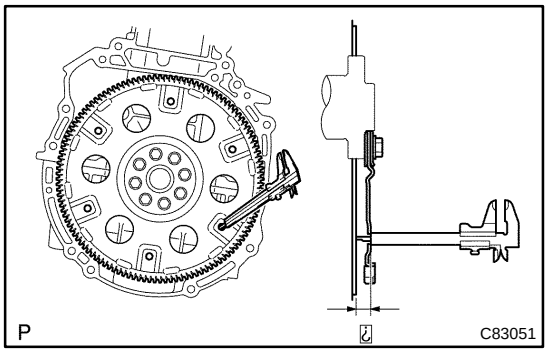

(b) Using vernier calipers, measure the dimension ”A” between the transaxle fitting part and the converter fitting part of the drive plate.

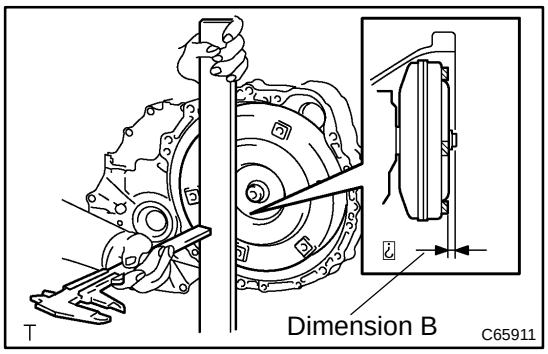

(c) Using vernier calipers and a straight edge, measure the dimension ”B” shown in the illustration and check that ”B” is greater than ”A” measured in (b).
Standard: A + 1 mm or more

NOTICE:
Do not add the thickness of straight edge.

19. INSTALL AUTOMATIC TRANSAXLE ASSY

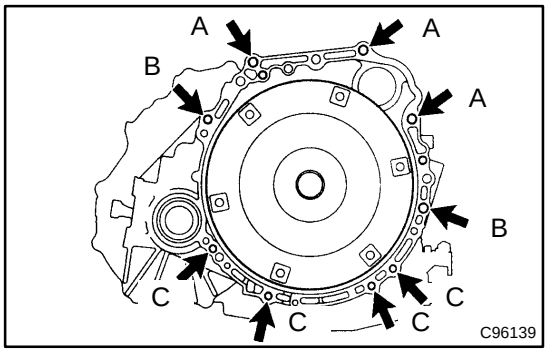

(a) Install the automatic transaxle and 9 bolts to the engine.
Torque:
Bolt A: 64 N·m (650 kgf·cm, 47 ft·lbf)
Bolt B: 46 N·m (470 kgf·cm, 34 ft·lbf)
Bolt C: 44 N·m (449 kgf·cm, 32 ft·lbf)

(b) Apply a few drops of adhesive to each 2 threads on the tip of the 6 torque converter clutch mounting bolts.
Adhesive: Part No. 08833–00070, THREE BOND 1324 or equivalent

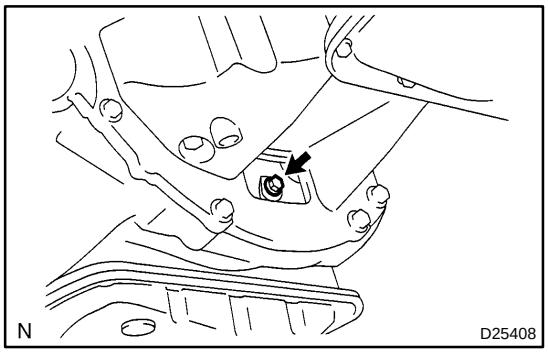

(c) Install the 6 torque converter clutch mounting bolts.
Torque: 41 N·m (420 kgf·cm, 30 ft·lbf)

HINT:
First install green colored bolt and then the other 5 bolts.

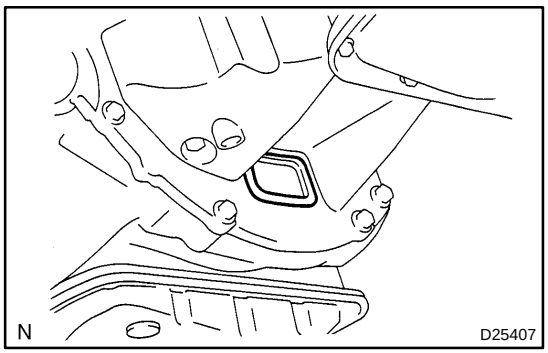

20. INSTALL FLYWHEEL HOUSING UNDER COVER

(a) Install the flywheel housing under cover.

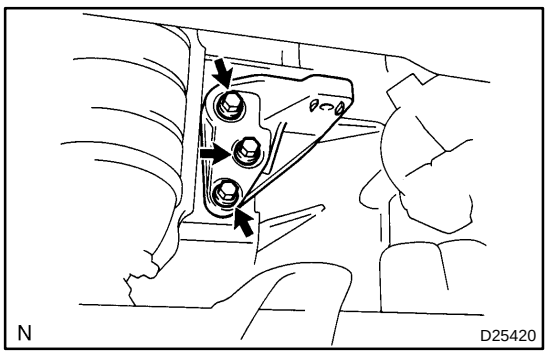

21. INSTALL TRANSVERSE ENGINE ENGINE MOUNTING BRACKET

(a) Install the engine mounting bracket FR and 3 bolts to the automatic transaxle.
Torque: 64 N·m (653 kgf·cm, 47 ft·lbf)

22. INSTALL TRANSMISSION OIL FILLER TUBE SUB–ASSY

(a) Coat a new O–ring with ATF, and install them to the oil filler tube.
(b) Install the oil filler tube and bolt to the automatic transaxle.
Torque: 5.5 N·m (56 kgf·cm, 49 in.·lbf)
(c) Connect the wire harness clamp to the oil filler tube.
(d) Install the ATF level gauge.

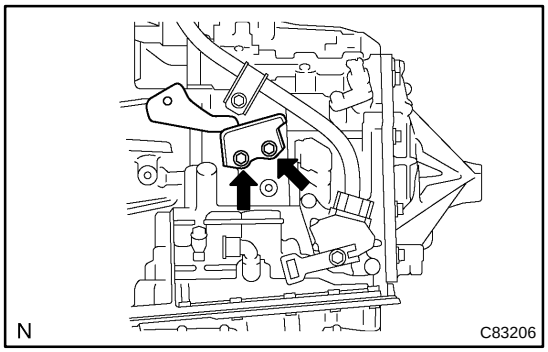

23. INSTALL TRANSMISSION CONTROL CABLE BRACKET NO.1

(a) Install the control cable bracket No.1 and 2 bolts.
Torque: 11.8 N·m (122 kgf·cm, 9 ft·lbf)

24. INSTALL OIL COOLER INLET TUBE NO.1

(a) Temporarily install the oil cooler outlet tube No.1.
(b) Temporarily install the oil cooler inlet tube No.1.

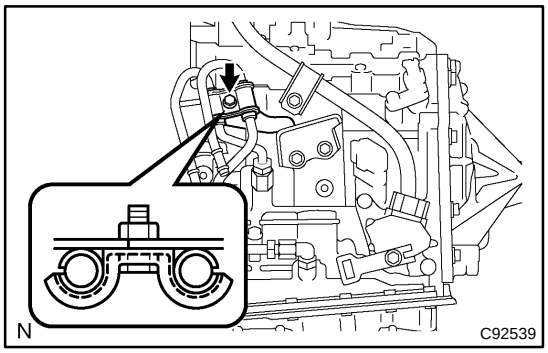

(c) Install the oil cooler tube clamp and bolt.
Torque: 5.4 N·m (56 kgf·cm, 49 in.·lbf)

HINT:
Install them so that the oil cooler tube cushion is positioned as being illustrated.

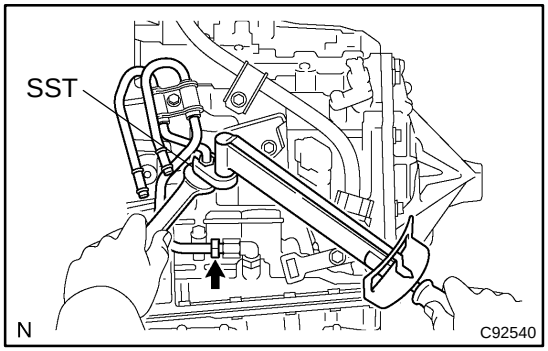

(d) Using SST and spanner, tighten the oil cooler inlet tube No.1.
SST 09023–12700
Torque: 34.3 N·m (350 kgf·cm, 25 ft·lbf)

25. INSTALL OIL COOLER OUTLET TUBE NO.1

(a) Using SST and spanner, tighten the oil cooler outlet tube No.1.
SST 09023–12700
Torque: 34.3 N·m (350 kgf·cm, 25 ft·lbf)

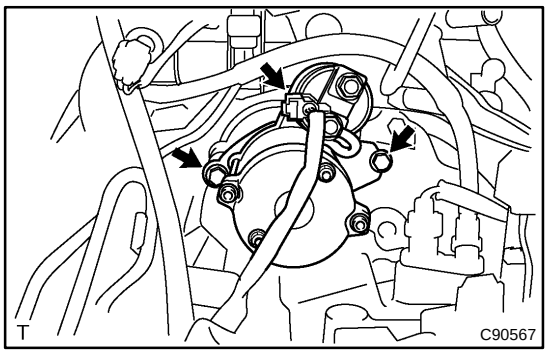

26. INSTALL STARTER ASSY

(a) Install the starter assy and 2 bolts.
Torque: 37 N·m (377 kgf·cm, 27 ft·lbf)
(b) Connect the connecter.

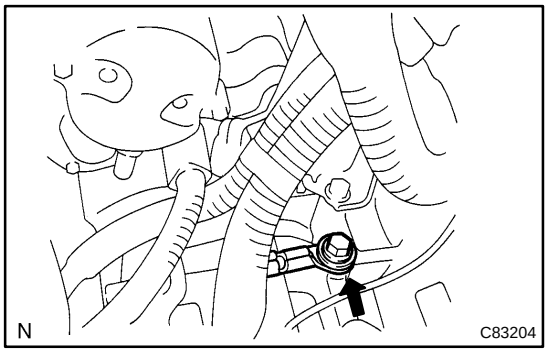

27. INSTALL WIRE HARNESS
(a) Install the wire harness and bolt.
Torque: 25.5 N·m (260 kgf·cm, 19 ft·lbf)

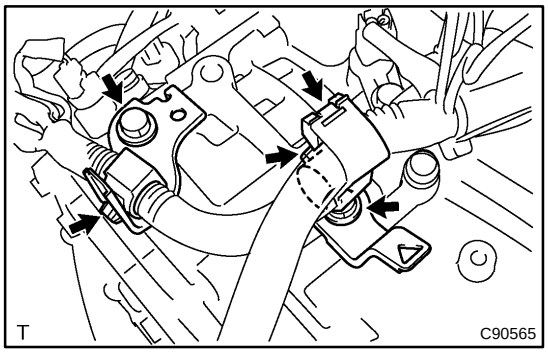

28. INSTALL WIRE HARNESS CLAMP
(a) Install the 2 clamps and 2 bolts.
Torque: 8.4 N·m (86 kgf·cm, 74 in.·lbf)
(b) Connect the wire harness to the clamps.

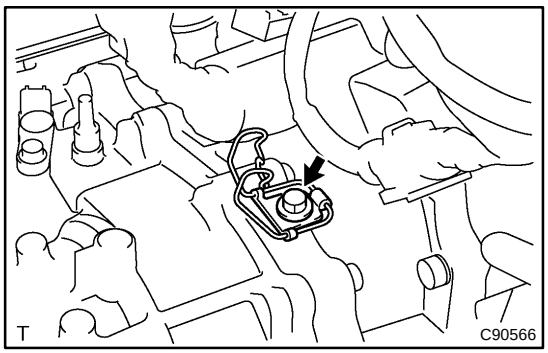

29. INSTALL TRANSMISSION CONTROL CABLE BRACKET NO.2

(a) Install the transmission control cable bracket No.2 and bolt.
Torque: 11.8 N·m (122 kgf·cm, 9 ft·lbf)

30. INSTALL FRONT DRIVE SHAFT ASSY LH
(See page 30–8)
31. INSTALL FRONT DRIVE SHAFT ASSY RH
(See page 30–8)
32. INSTALL ENGINE ASSEMBLY WITH TRANSAXLE(See page 14–22)

TORQUE CONVERTER CLUTCH AND DRIVE PLATE

40063–02

INSPECTION

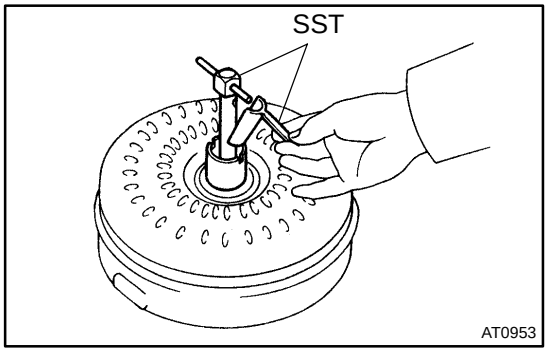

1. INSPECT TORQUE CONVERTER CLUTCH ASSY

(a) Inspect the one–way clutch.

(1) Set SST into the inner race of the one–way clutch.

SST 09350–32014 (09351–32010)

(2) Install SST so that it fits in the notch of the converter hub and outer race of the one–way clutch.

SST 09350–32014 (09351–32020)

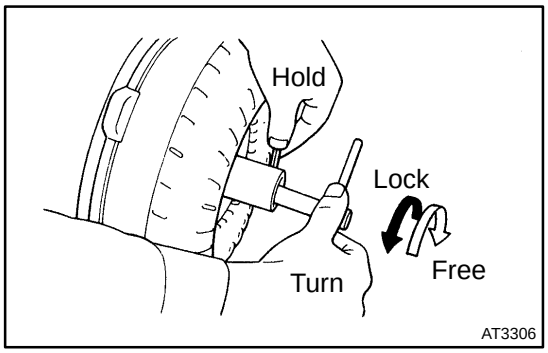

(3) With the torque converter clutch setting up on its side, check that the one–way clutch locks when it is turned counterclockwise, and rotates clockwise smoothly.

If necessary, clean the converter and retest the one–way clutch.

Replace the converter if the one–way clutch still fails the test.

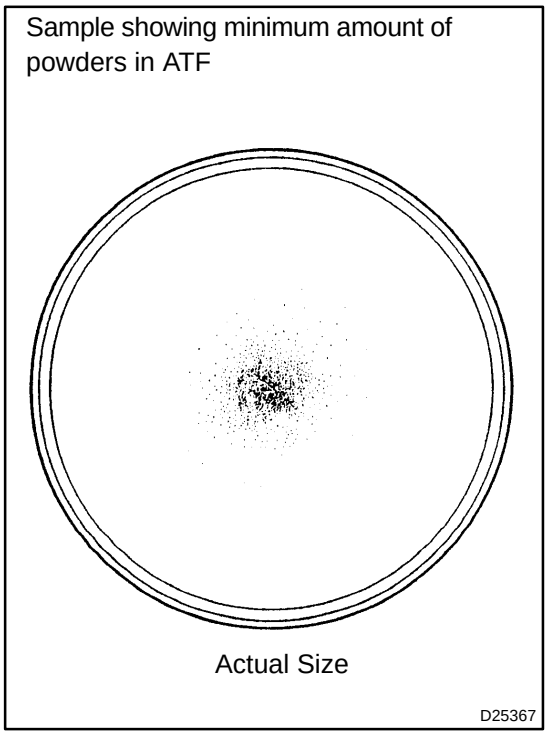

(b) Determine the condition of the torque converter clutch assy.

(1) If the inspection result of the torque converter clutch assy meets the following item, replace the torque converter clutch.

Malfunction item:

Any metallic sound is heard from the torque converter clutch during stall test or when the shift lever is in neutral position.

One–way clutch is free or locked in both directions.

Fine powders exceeding the sample limit is identified in ATF. (See the sample.)

HINT:

The sample shows the auto fluid of approx. 0.25 liters (0.26 US qts, 0.22 Imp. qts) that is taken out from the removed torque converter clutch

(c) Exchange the ATF in the torque converter clutch.

(1) If the ATF is discolored and/or has a foul odor, completely stir the ATF in the torque converter clutch and drain the ATF with the torque converter facing to up.

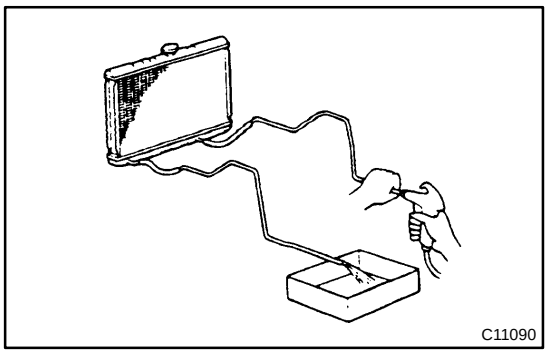

(d) Clean and check the oil cooler and oil pipe line.
  (1) If the torque converter clutch is inspected or the ATF is exchanged, clean the oil cooler and oil pipe line.

HINT:

- Spray compressed air of 196 kPa (2 kgf/cm^2, 28 psi) from the inlet hose.
- If plenty of fine powders are identified in the ATF, add new ATF using a bucket pump and clean it again.
  (2) If the ATF is cloudy, inspect the oil cooler (radiator).

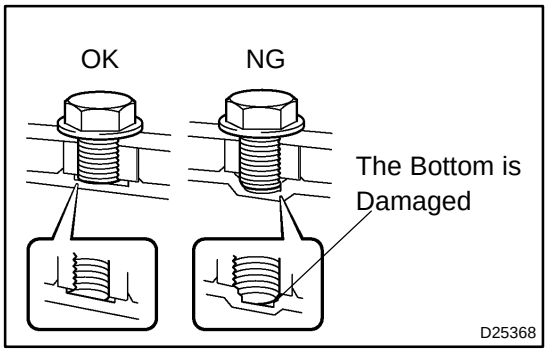

(e) Prevent deformation of the torque converter clutch and damage to the oil pump gear.
  (1) When any marks due to interference are found on the end of the bolt for the torque converter clutch and on the bottom of the bolt hole, replace the bolt and the torque converter clutch.
  (2) All of the bolts must be the same length.
  (3) The bolts with washers must be used.

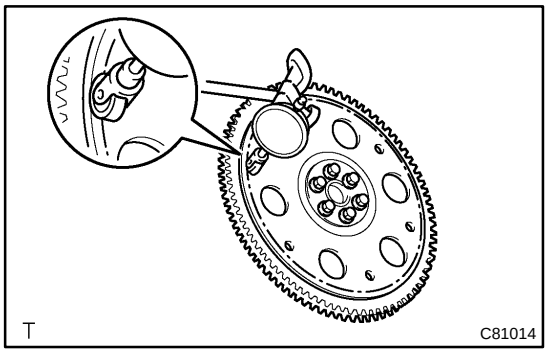

2. INSPECT DRIVE PLATE & RING GEAR SUB–ASSY

(a) Set up a dial indicator and measure the drive plate runout.
(b) Check the damage of the ring gear.
  Maximum runout: 0.20 mm (0.0079 in.)

If the runout is not within the specification or ring gear is damaged, replace the drive plate.

TRANSMISSION REVOLUTION SENSOR

4005U–02

REPLACEMENT

1. REMOVE BATTERY
2. REMOVE ENGINE COVER SUB–ASSY NO.1
3. REMOVE AIR CLEANER ASSY
4. REMOVE AIR CLEANER HOSE NO.1

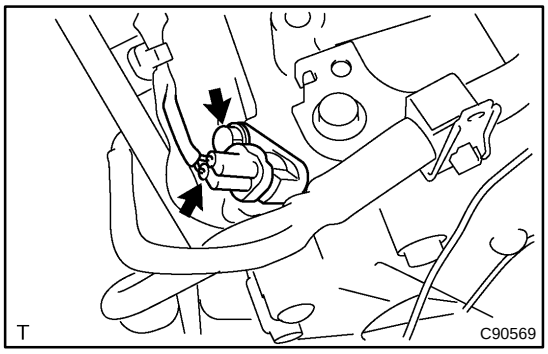

5. REMOVE TRANSMISSION REVOLUTION SENSOR(NT SENSOR)

(a) Disconnect the transmission revolution sensor connector.
(b) Remove the bolt and transmission revolution sensor.

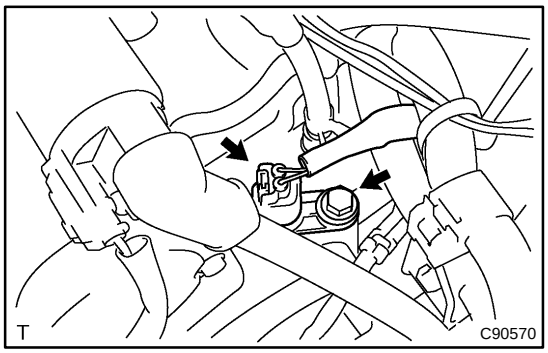

6. REMOVE TRANSMISSION REVOLUTION SENSOR(NC SENSOR)

(a) Disconnect the transmission revolution sensor connector.
(b) Remove the bolt and transmission revolution sensor.

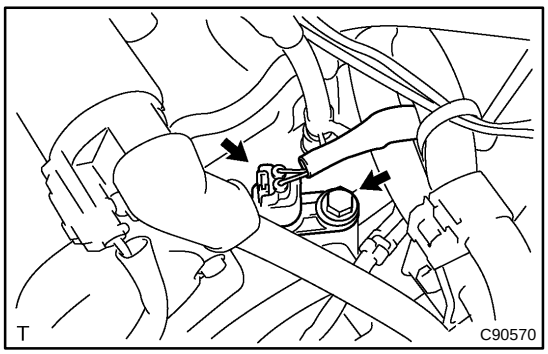

7. INSTALL TRANSMISSION REVOLUTION SENSOR(NC SENSOR)

(a) Coat an O–ring with ATF.
(b) Install the transmission revolution sensor with the bolt.
Torque: 11.3 N·m (115 kgf·cm, 8 ft·lbf)

HINT:
Make sure of the manufacturer's name.

(c) Connect the transmission revolution sensor connector.

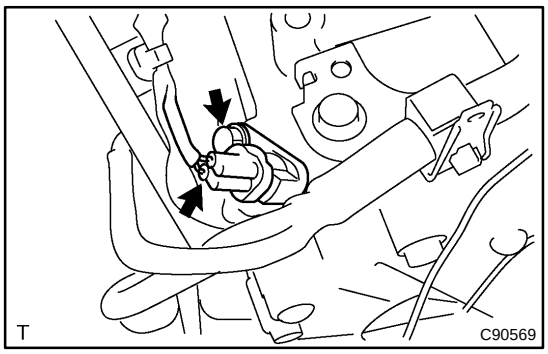

8. INSTALL TRANSMISSION REVOLUTION SENSOR(NT SENSOR)

(a) Coat an O–ring with ATF.
(b) Install the transmission revolution sensor with the bolt.
Torque: 11.3 N·m (115 kgf·cm, 8 ft·lbf)

HINT:
Make sure of the manufacturer's name.

(c) Connect the transmission revolution sensor connector.

9. INSTALL AIR CLEANER HOSE NO.1

10. INSTALL AIR CLEANER ASSY

Torque: 5.0 N·m (51 kgf·cm, 44 in.·lbf)

11. INSTALL ENGINE COVER SUB–ASSY NO.1

SPEED SENSOR

40060–02

REPLACEMENT

1. REMOVE BATTERY
2. REMOVE ENGINE COVER SUB–ASSY NO.1
3. REMOVE AIR CLEANER ASSY
4. REMOVE AIR CLEANER HOSE NO.1

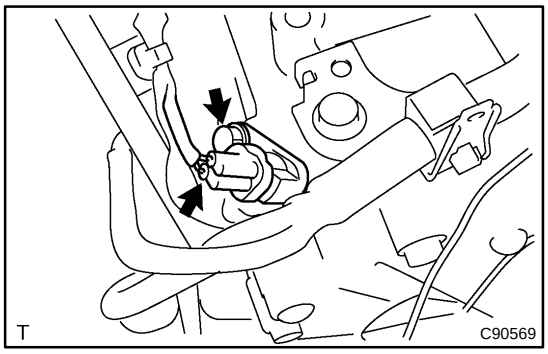

5. REMOVE SPEED SENSOR(NT SENSOR)

(a) Disconnect the speed sensor connector.
(b) Remove the bolt and speed sensor.

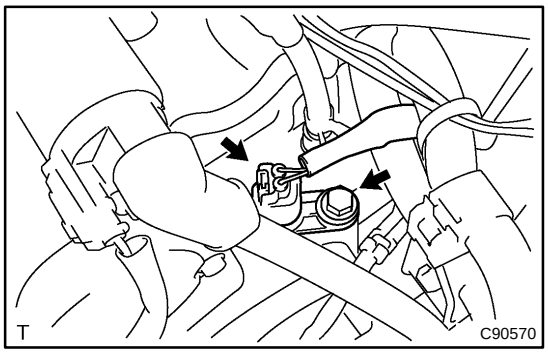

6. REMOVE SPEED SENSOR(NC SENSOR)

(a) Disconnect the speed sensor connector.
(b) Remove the bolt and speed sensor.

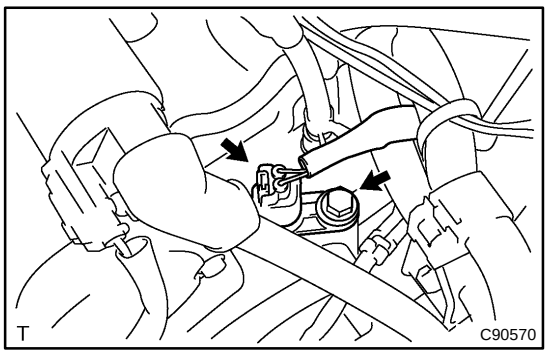

7. INSTALL SPEED SENSOR(NC SENSOR)

(a) Coat an O–ring with ATF.
(b) Install the speed sensor with the bolt.
Torque: 11.3 N·m (115 kgf·cm, 8 ft·lbf)

HINT:
Make sure of the manufacturer's name.

(c) Connect the speed sensor connector.

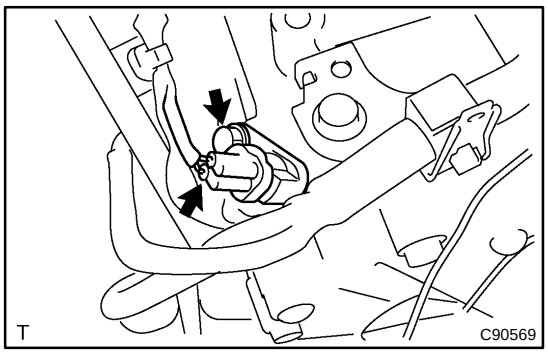

8. INSTALL SPEED SENSOR(NT SENSOR)

(a) Coat an O–ring with ATF.
(b) Install the speed sensor with the bolt.
Torque: 11.3 N·m (115 kgf·cm, 8 ft·lbf)

HINT:
Make sure of the manufacturer’s name.

(c) Connect the speed sensor connector.

9. INSTALL AIR CLEANER HOSE NO.1

10. INSTALL AIR CLEANER ASSY

Torque: 5.0 N·m (51 kgf·cm, 44 in.·lbf)

11. INSTALL ENGINE COVER SUB–ASSY NO.1

TRANSMISSION WIRE

4005V–02

REPLACEMENT

1. REMOVE ENGINE UNDER COVER LH

2. DRAIN AUTOMATIC TRANSAXLE FLUID

(a) Remove the drain plug and gasket, and drain ATF.
(b) Install a new gasket and drain plug.
Torque: 49 N·m (500 kgf·cm, 36 ft·lbf)

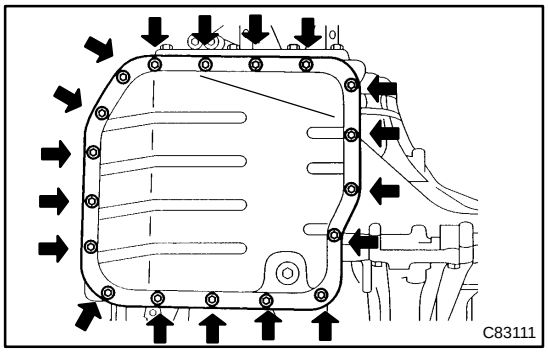

3. REMOVE AUTOMATIC TRANSAXLE OIL PAN SUB–ASSY

(a) Remove the 18 bolts, oil pan and gasket.

NOTICE:
Some fluid will remain in the oil pan. Remove all pan bolts, and carefully remove the oil pan assembly.

(b) Remove the 2 magnets from the oil pan.

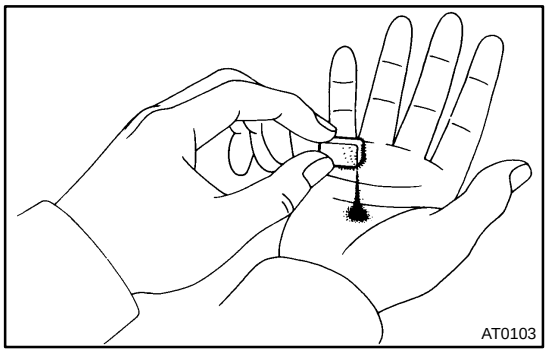

(c) Examine particles in pan.
(1) Remove the magnets and use them to collect any steel chips. Look carefully at the chips and particles in the pan and the magnet to anticipate what type of wear you will find in the transaxle.
Steel (magnetic): bearing, gear and plate wear
Brass (non–magnetic): bearing wear

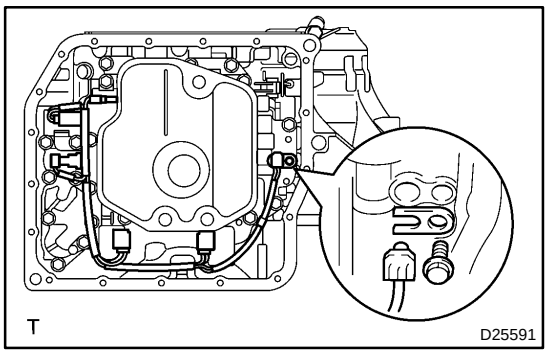

4. DISCONNECT TRANSMISSION WIRE

(a) Disconnect the 5 shift solenoid valve connectors.
(b) Remove the bolt and lock plate, and disconnect the ATF temperature sensor.

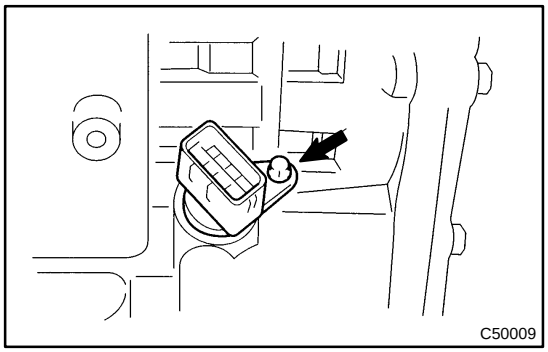

5. REMOVE TRANSMISSION WIRE

(a) Disconnect the transmission wire connector.
(b) Remove the bolt and transmission wire.

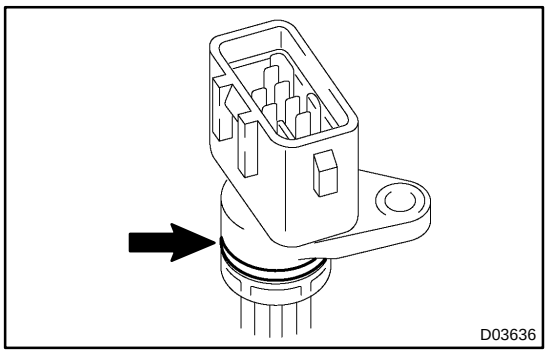

6. INSTALL TRANSMISSION WIRE

(a) Coat a O–ring of the transmission wire connector with ATF.
(b) Install the transmission wire.

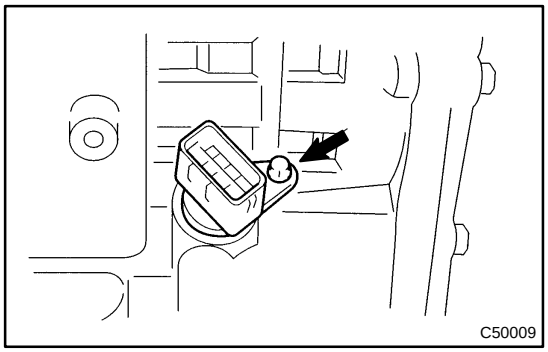

(c) Install the bolt.
Torque: 5.4 N·m (55 kgf·cm, 48 in.·lbf)

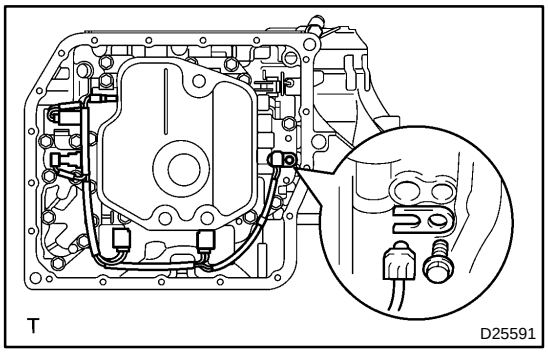

7. CONNECT TRANSMISSION WIRE

(a) Coat a O–ring of the ATF temperature sensor with ATF.
(b) Install the ATF temperature sensor with the lock plate and bolt.
Torque: 6.6 N·m (67 kgf·cm, 58 in.·lbf)
(c) Connect the 5 shift solenoid valve connectors.

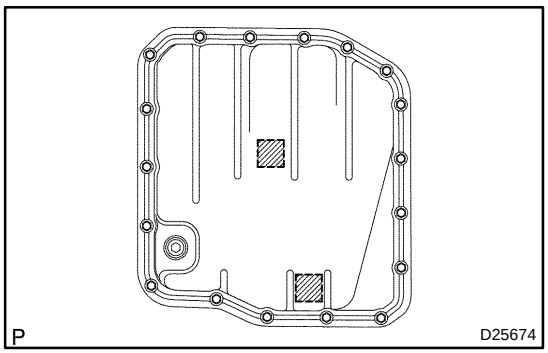

8. INSTALL AUTOMATIC TRANSAXLE OIL PAN SUB–ASSY

(a) Install the 2 magnets in the oil pan.
(b) Apply seal packing or equivalent to 18 bolts.
Seal packing:
THREE BOND 2430 or equivalent

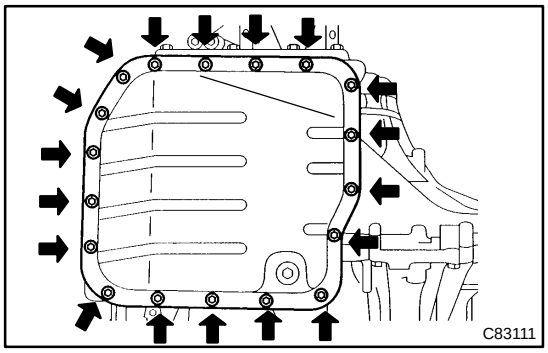

(c) Install a new gasket, oil pan and 18 bolts to the transaxle case.
Torque: 7.8 N·m (80 kgf·cm, 69 in.·lbf)

NOTICE:

Because the bolts should be seal bolts, apply seal packing to bolts and tighten them within 10 minutes after application.

9. ADD AUTOMATIC TRANSAXLE FLUID
10. INSPECT AUTOMATIC TRANSAXLE FLUID(See page 40–1)
11. INSTALL ENGINE UNDER COVER LH

TRANSMISSION VALVE BODY ASSY

40064–02

REPLACEMENT

1. REMOVE ENGINE UNDER COVER RH

2. DRAIN AUTOMATIC TRANSAXLE FLUID

(a) Remove the drain plug and gasket, and drain ATF.

(b) Install a new gasket and drain plug.
Torque: 49 N·m (500 kgf·cm, 36 ft·lbf)

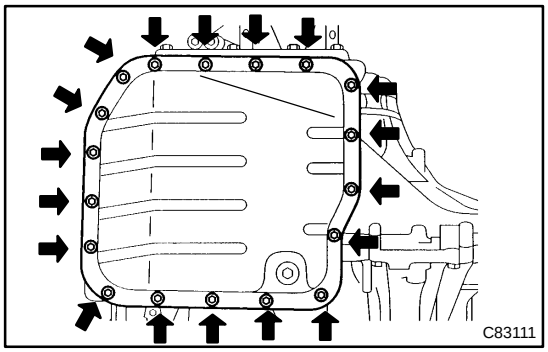

3. REMOVE AUTOMATIC TRANSAXLE OIL PAN SUB–ASSY

(a) Remove the 18 bolts, oil pan and gasket.

NOTICE:
Some fluid will remain in the oil pan. Remove all pan bolts, and carefully remove the oil pan assembly.

(b) Remove the 2 magnets from the oil pan.

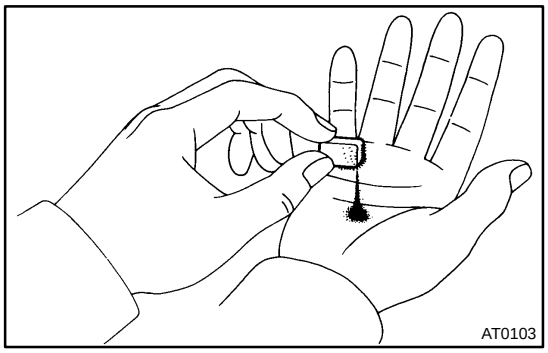

(c) Examine particles in pan.
(1) Remove the magnets and use them to collect any steel chips. Look carefully at the chips and particles in the pan and the magnet to anticipate what type of wear you will find in the transaxle.
Steel (magnetic): bearing, gear and plate wear
Brass (non–magnetic): bearing wear

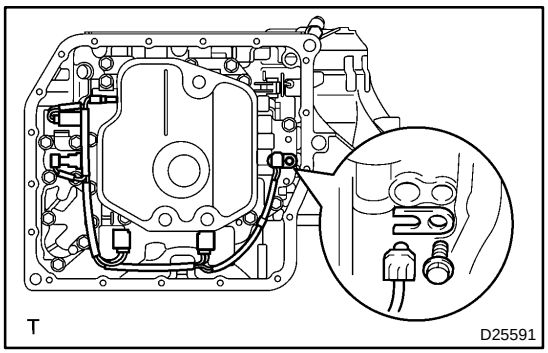

4. DISCONNECT TRANSMISSION WIRE

(a) Disconnect the 5 shift solenoid valve connectors.

(b) Remove the bolt and lock plate, and disconnect the ATF temperature sensor.

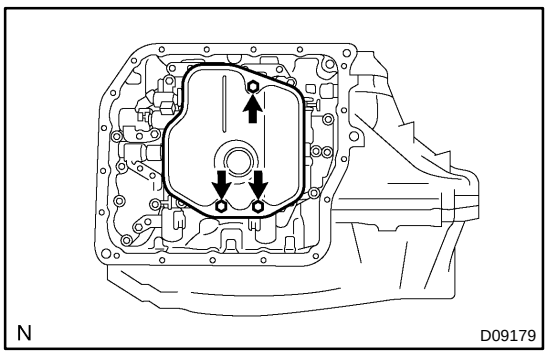

5. REMOVE VALVE BODY OIL STRAINER ASSY

(a) Remove the 3 bolts and oil strainer.

NOTICE:
Be careful as some fluid will come out with the oil strainer.

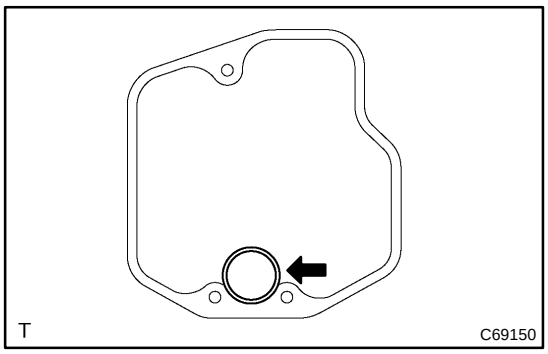

(b) Remove the O–ring from the oil strainer.

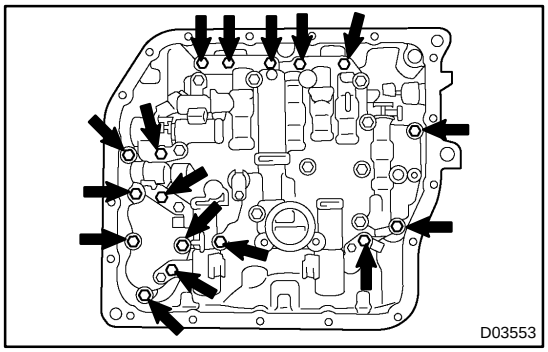

6. REMOVE TRANSMISSION VALVE BODY ASSY

(a) Support the valve body assy and remove the 17 bolts and the valve body assy.

NOTICE:
Be careful not to drop the check valve body, spring and accumulator piston.

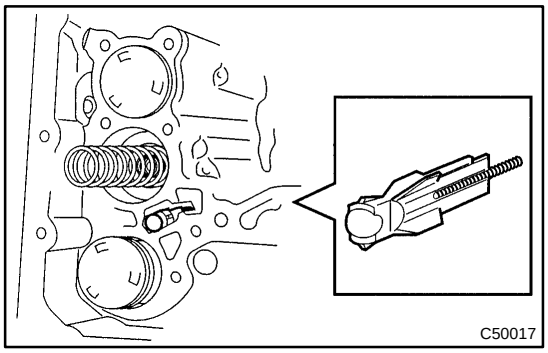

(b) Remove the check ball body and spring.

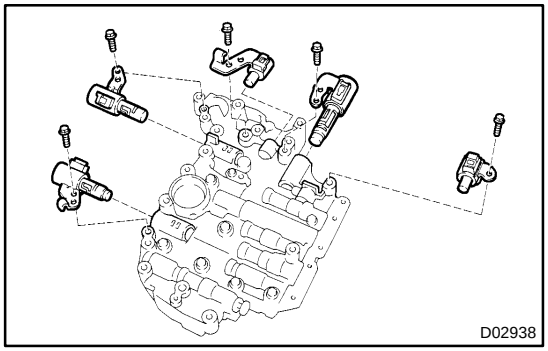

(c) Remove the 5 bolts and 5 shift solenoid valves.

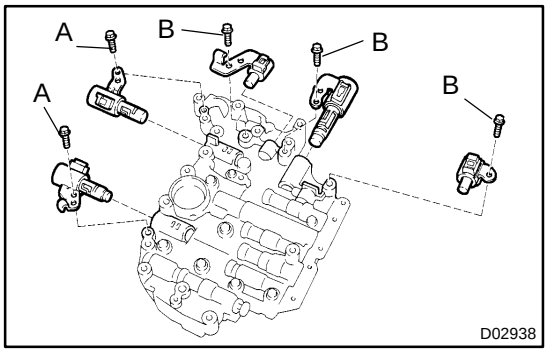

7. INSTALL TRANSMISSION VALVE BODY ASSY

(a) Install the 5 shift solenoid valves with the 5 bolts.
Torque:
Bolt A: 6.6 N·m (67 kgf·cm, 58 in.·lbf)
Bolt B: 10.8 N·m (110 kgf·cm, 8 ft ·lbf)
Bolt length:
Bolt A: 12 mm (0.47 in.)
Bolt B: 45 mm (1.77 in.)

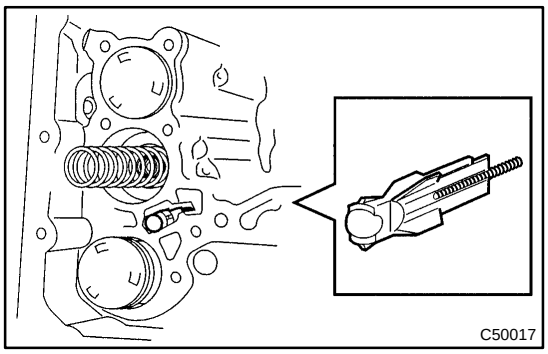

(b) Install the spring and check ball body.

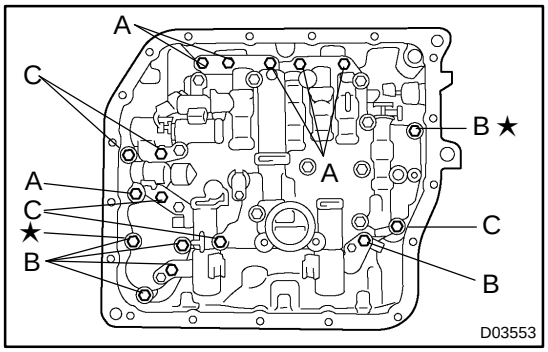

(c) Align the groove of the manual valve with the pin of lever.
(d) Install the 17 bolts.
Torque: 10.8 N·m (110 kgf·cm, 8 ft·lbf)

NOTICE:

- **Push the valve body against the accumulator piston spring and the check ball body to install it.**
- **Tighten those bolts marked by ★ in the illustration first temporarily because they are positioning bolts.**
  Bolt length:
  Bolt A: 25 mm (0.984 in.)
  Bolt B: 41 mm (1.614 in.)
  Bolt C: 45 mm (1.771 in.)

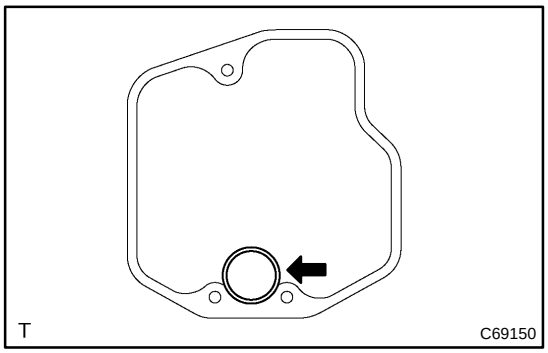

8. INSTALL VALVE BODY OIL STRAINER ASSY

(a) Coat a new O–ring with ATF.
(b) Install the O–ring to the oil strainer.

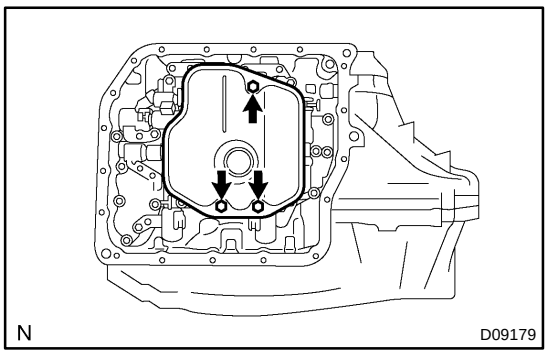

(c) Install the oil strainer with the 3 bolts.
Torque: 10.8 N·m (110 kgf·cm, 8 ft·lbf)

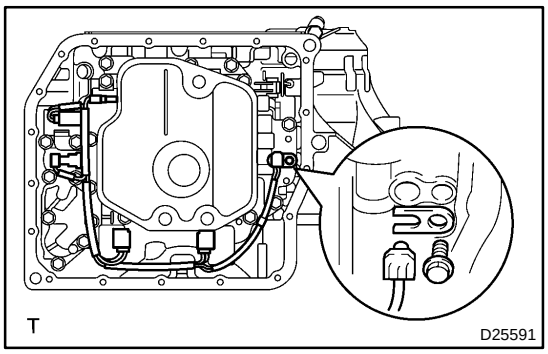

9. INSTALL TRANSMISSION WIRE

(a) Coat an O–ring with ATF.
(b) Install the ATF temperature sensor with the lock plate and bolt.
Torque: 6.6 N·m (67 kgf·cm, 58 in.·lbf)
(c) Connect the 5 shift solenoid valve connectors.

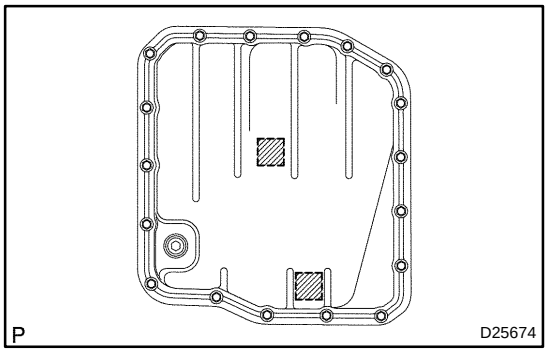

10. INSTALL AUTOMATIC TRANSAXLE OIL PAN SUB–ASSY

(a) Install the 2 magnets in the oil pan.
(b) Apply seal packing or equivalent to 18 bolts.
Seal packing:
THREE BOND 2430 or equivalent

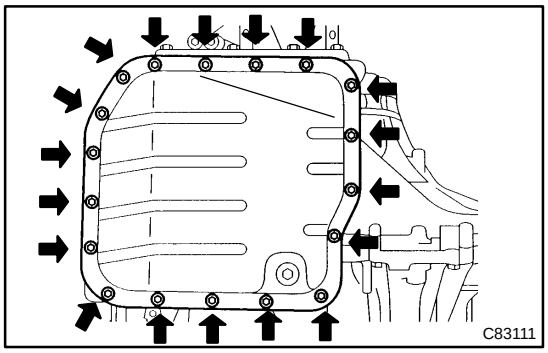

(c) Install a new gasket, oil pan and 18 bolts to the transaxle case.
Torque: 7.8 N·m (80 kgf·cm, 69 in.·lbf)

NOTICE:
Because the bolts should be seal bolts, apply seal packing to bolts and tighten them within 10 minutes after application.

11. ADD AUTOMATIC TRANSAXLE FLUID
12. INSPECT AUTOMATIC TRANSAXLE FLUID(See page 40–1)

FRONT DIFFERENTIAL OIL SEAL (U241E)

40065–02

REPLACEMENT

1. REMOVE FRONT WHEEL

2. REMOVE ENGINE UNDER COVER RH

3. REMOVE ENGINE UNDER COVER LH

4. DRAIN AUTOMATIC TRANSAXLE FLUID

(a) Remove the drain plug and gasket, and drain ATF.

(b) Install a new gasket and drain plug.
Torque: 49 N·m (500 kgf·cm, 36 ft·lbf)

5. REMOVE FRONT DRIVE SHAFT ASSY RH
(See page 30–8)

6. REMOVE FRONT DRIVE SHAFT ASSY LH
(See page 30–8)

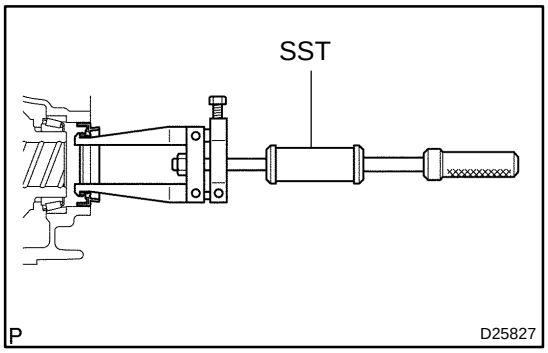

7. REMOVE TRANSAXLE HOUSING OIL SEAL

(a) Using SST, pull out the oil seal.
SST 09308–00010

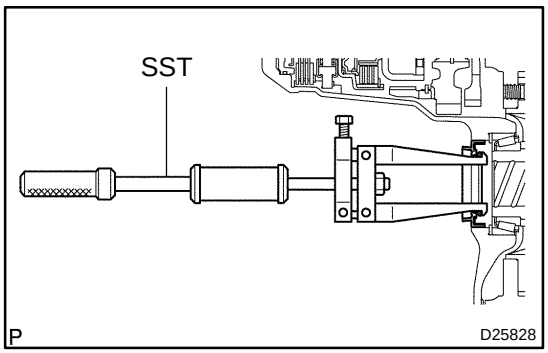

8. REMOVE DIFFERENTIAL SIDE BEARING RETAINER OIL SEAL

(a) Using SST, pull out the oil seal.
SST 09308–00010

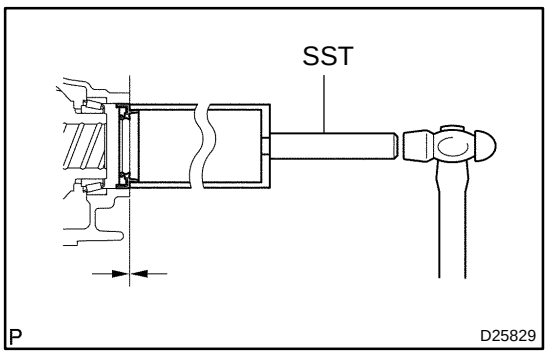

9. INSTALL TRANSAXLE HOUSING OIL SEAL

(a) Using SST and a hammer, drive in a new oil seal.
SST 09316–60011 (09316–00011)
Oil seal drive in depth:
0 ± 0.5 mm (0 ± 0.020 in.)

(b) Coat the lip of the oil seal with MP grease.

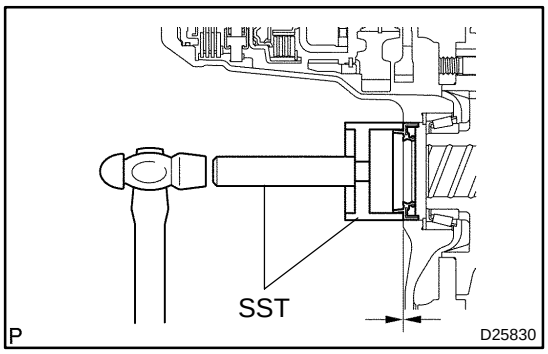

10. INSTALL DIFFERENTIAL SIDE BEARING RETAINER OIL SEAL

(a) Using SST and a hammer, drive in a new oil seal.
SST 09649–17010, 09950–70010 (09951–07150)
Oil seal drive in depth:
0 ± 0.5 mm (0 ± 0.020 in.)

(b) Coat the lip of the oil seal with MP grease.

11. INSTALL FRONT DRIVE SHAFT ASSY LH
(See page 30–8)

12. INSTALL FRONT DRIVE SHAFT ASSY RH
(See page 30–8)

13. INSTALL ENGINE UNDER COVER LH

14. INSTALL ENGINE UNDER COVER RH

15. INSTALL FRONT WHEEL
Torque: 103 N·m (1,050 kgf·cm, 76 ft·lbf)

16. ADD AUTOMATIC TRANSAXLE FLUID

17. INSPECT AUTOMATIC TRANSAXLE FLUID(See page 40–1)

18. CHECK ABS SPEED SENSOR SIGNAL(See page 05–363, 05–404 or 05–452)

FRONT DIFFERENTIAL OIL SEAL (U140E)

40066–02

REPLACEMENT

1. REMOVE FRONT WHEEL

2. REMOVE ENGINE UNDER COVER RH

3. REMOVE ENGINE UNDER COVER LH

4. DRAIN AUTOMATIC TRANSAXLE FLUID

(a) Remove the drain plug and gasket, and drain ATF.

(b) Install a new gasket and drain plug.
Torque: 49 N·m (500 kgf·cm, 36 ft·lbf)

5. REMOVE FRONT DRIVE SHAFT ASSY RH
(See page 30–8)

6. REMOVE FRONT DRIVE SHAFT ASSY LH
(See page 30–8)

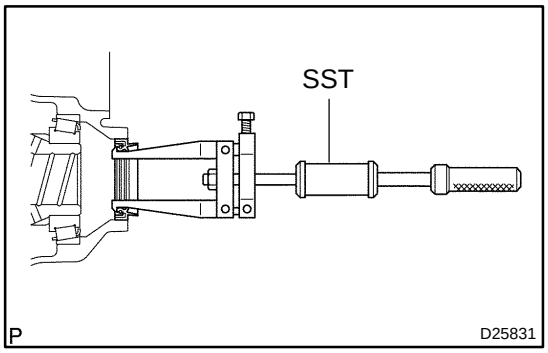

7. REMOVE TRANSAXLE HOUSING OIL SEAL

(a) Using SST, pull out the oil seal.
SST 09308–00010

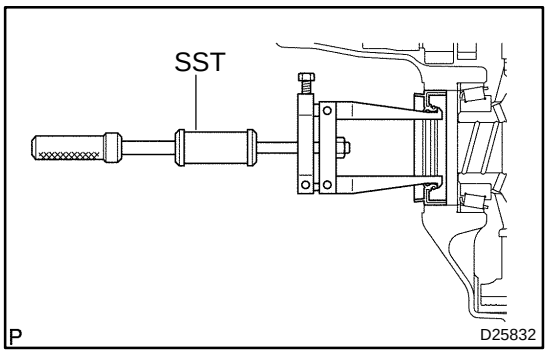

8. REMOVE DIFFERENTIAL SIDE BEARING RETAINER OIL SEAL

(a) Using SST, pull out the oil seal.
SST 09308–00010

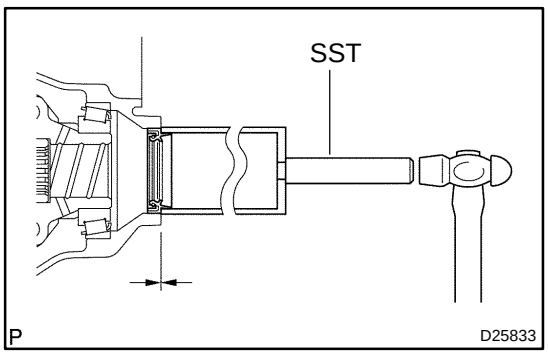

9. INSTALL TRANSAXLE HOUSING OIL SEAL

(a) Using SST and a hammer, drive in a new oil seal.
SST 09316–60011 (09316–00011)
Oil seal drive in depth:
0 ± 0.5 mm (0 ± 0.020 in.)

(b) Coat the lip of the oil seal with MP grease.

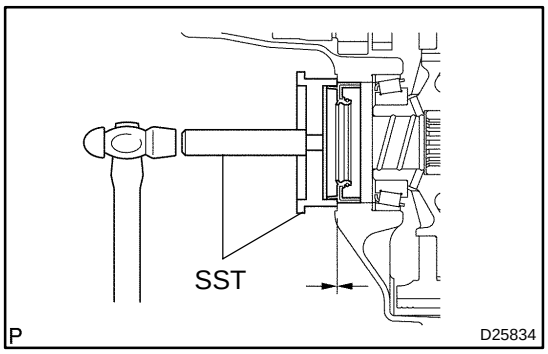

10. INSTALL DIFFERENTIAL SIDE BEARING RETAINER OIL SEAL

(a) Using SST and a hammer, drive in a new oil seal.
SST 09223–15020, 09950–70010 (09951–07150)
Oil seal drive in depth:
0 ± 0.5 mm (0 ± 0.020 in.)

(b) Coat the lip of the oil seal with MP grease.

11. INSTALL FRONT DRIVE SHAFT ASSY LH
(See page 30–8)

12. INSTALL FRONT DRIVE SHAFT ASSY RH
(See page 30–8)

13. INSTALL ENGINE UNDER COVER RH

14. INSTALL ENGINE UNDER COVER LH

15. INSTALL FRONT WHEEL
Torque: 103 N·m (1,050 kgf·cm, 76 ft·lbf)

16. ADD AUTOMATIC TRANSAXLE FLUID

17. INSPECT AUTOMATIC TRANSAXLE FLUID(See page 40–1)

18. CHECK ABS SPEED SENSOR SIGNAL(See page 05–363, 05–404 or 05–452)

SHIFT LOCK SYSTEM

40067–02

ON–VEHICLE INSPECTION

1. CHECK SHIFT LOCK OPERATION

(a) Shift the shift lever to P position.
(b) Turn the ignition switch to LOCK.
(c) Check that the shift lever cannot be shifted to any other positions other than P.
(d) Turn the ignition switch to ON, depress the brake pedal and check that the shift lever can be shifted to any other positions.

2. CHECK SHIFT LOCK RELEASE BUTTON OPERATION

(a) Using a screwdriver, remove the shift lock release button cover.
(b) When operating the shift lever with the shift lock release button pressed and the ignition key in ACC or ON, check that the lever can be shifted to any other position.

3. CHECK KEY INTERLOCK OPERATION

(a) Turn the ignition switch to ON.
(b) Depress the brake pedal and shift the shift lever to any other positions other than P.
(c) Check that the ignition key cannot be turned to LOCK.
(d) Shift the shift lever to P position, turn the ignition key to LOCK and check that the ignition key can be removed.

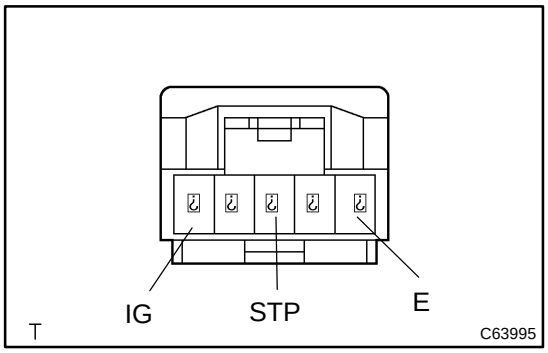

4. INSPECT SHIFT LOCK CONTROL SWITCH

(a) Using a voltmeter, measure the voltage at each terminal.

HINT:

Do not disconnect the shift lock control unit connector.

Terminal	Measuring Condition	Voltage (V)
5 (IG) – 1 (E)	Ignition switch ON	10 – 14
5 (IG) – 1 (E)	Ignition switch OFF	0
3 (STP) – 1 (E)	Depress brake pedal	10 – 14
3 (STP) – 1 (E)	Release brake pedal	0

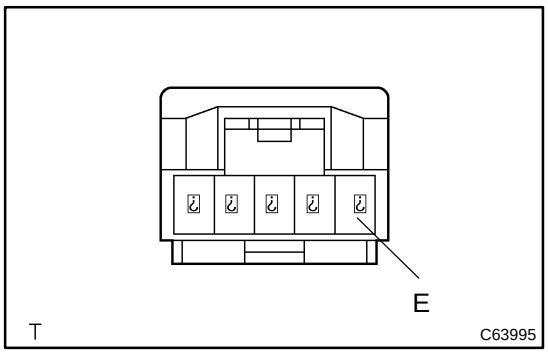

(b) Using an ohmmeter, measure the resistance at terminal E (1) and body ground.

Terminal	Measuring Condition	Specified Value
1 (E) – Body ground	Always	Continuity

FLOOR SHIFT ASSY

400FL–01

OVERHAUL

1. **REMOVE CONSOLE PANEL UPPER REAR**
   (See page 71–12)
2. **REMOVE CONSOLE BOX CARPET**

3. **REMOVE RR CONSOLE BOX(See page 71–12)**
4. **REMOVE INSTRUMENT PANEL CUP HOLDER TRAY(W/O ASHTRAY)**
   (See page 71–12)
5. **REMOVE INSTRUMENT PANEL ASH RECEPTACLE ASSY(W/ ASHTRAY)**
   (See page 71–12)
6. **REMOVE CONSOLE PANEL UPPER**
   (See page 71–12)
7. **REMOVE CONSOLE BOX FRONT**
   (See page 71–12)
8. **REMOVE AIR DUCT REAR NO.1**
   (See page 71–12)
9. **REMOVE AIR DUCT REAR NO.2**
   (See page 71–12)
10. **REMOVE CONSOLE BOX DUCT NO.1**
    (See page 71–12)

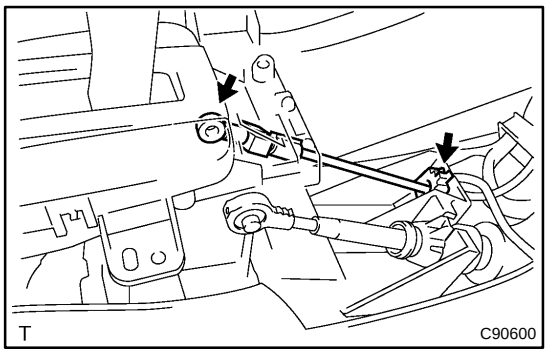

11. **DISCONNECT FLOOR SHIFT PARKING LOCK CABLE ASSY**

(a) Disconnect the parking lock cable from the transmission floor shift assy.

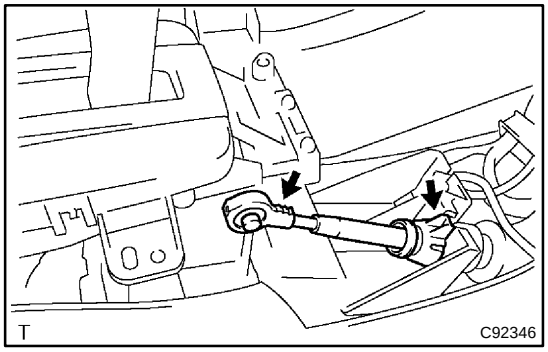

12. **DISCONNECT FLOOR SHIFT CABLE TRANSMISSION CONTROL SHIFT**

(a) Disconnect the floor shift cable from the transmission floor shift assy.

13. **REMOVE FLOOR SHIFT ASSY**

(a) Disconnect the shift lock control computer connector.
(b) Disconnect the transmission control switch connector.

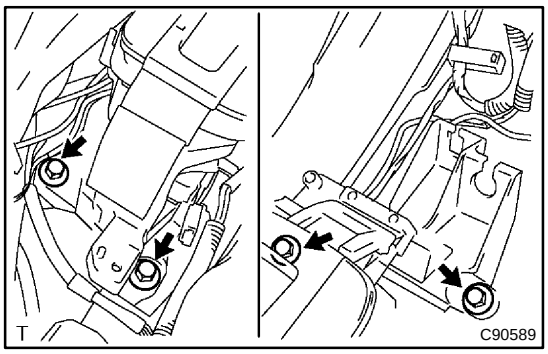

(c) Remove the 4 bolts and transmission floor shift assy.

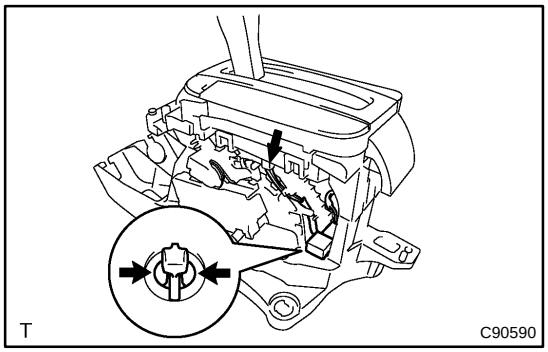

14. REMOVE INDICATOR LAMP WIRE SUB–ASSY

(a) Releasing the lock by pressing the slick, disconnect the indicator lamp wire connector from the shift lever plate.
(b) Disconnect the indicator lamp from the position indicator housing.

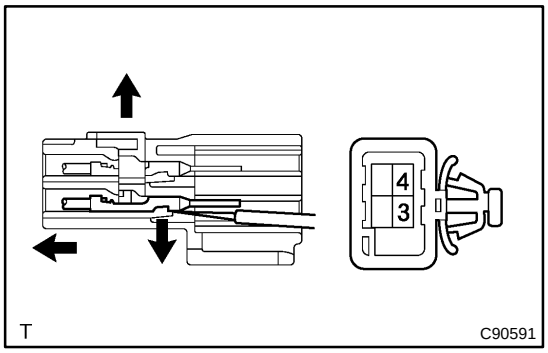

(c) Using a screwdriver, release the stopper of the connector.
(d) Using a small screwdriver, disengage the locking lug of the terminals 3 and 4, and pull the terminals out from the rear.
(e) Disconnect the wire harness from the clamps, and remove the indicator lamp wire.
(f) Remove the indicator lamp cap and indicator lamp bulb from the indicator lamp wire sub–assy.

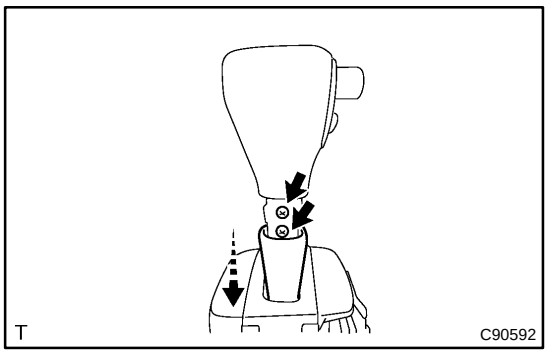

15. REMOVE FLOOR SHIFT SHIFT LEVER KNOB SUB–ASSY

(a) Lower the position indicator slide cover.
(b) Remove the 2 screws and shift lever knob from the shift lever.

16. REMOVE POSITION INDICATOR SLIDE COVER

(a) Remove the position indicator slide cover from the shift lever.

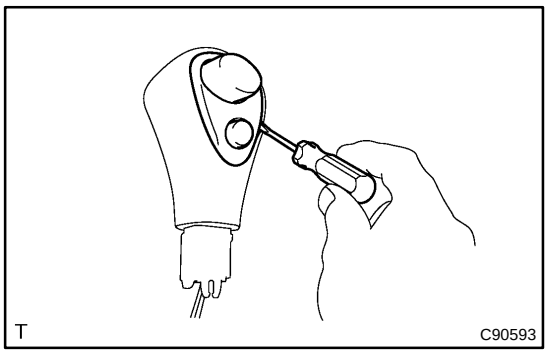

17. REMOVE TRANSMISSION CONTROL SWITCH

(a) Using a screwdriver, remove the transmission control switch from the shift lever knob.

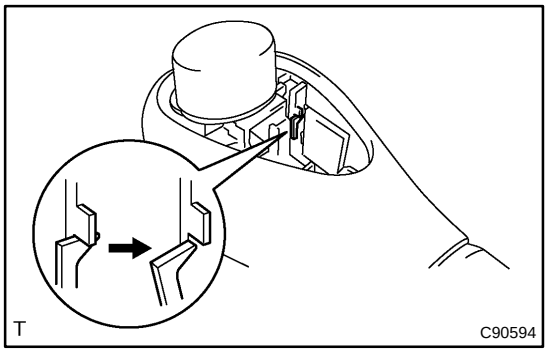

18. REMOVE SHIFT LEVER KNOB BUTTON

(a) Using a screwdriver, release the claw and remove the shift lever knob button
(b) Remove the compression spring.

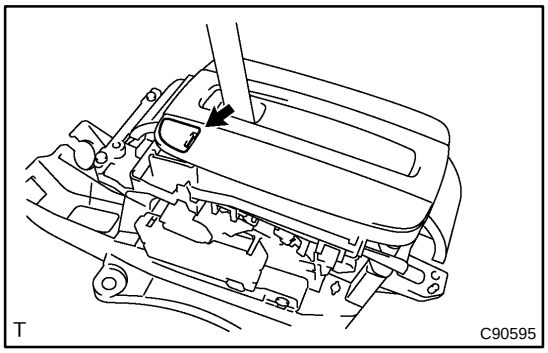

19. REMOVE SHIFT LOCK RELEASE BUTTON COVER

(a) Using a screwdriver, remove the shift lock release button cover.

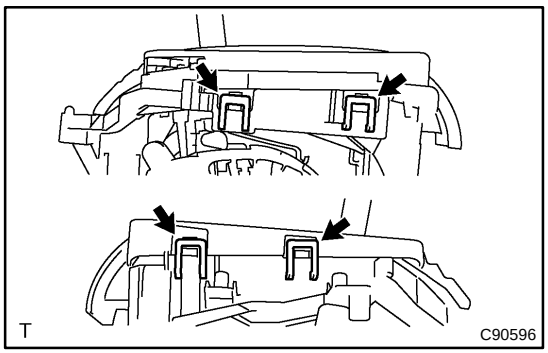

20. REMOVE POSITION INDICATOR HOUSING UPPER

(a) Using a screwdriver, release the 4 claws and remove the position indicator housing upper.

21. REMOVE POSITION INDICATOR HOUSING COVER

22. REMOVE POSITION INDICATOR SLIDE COVER

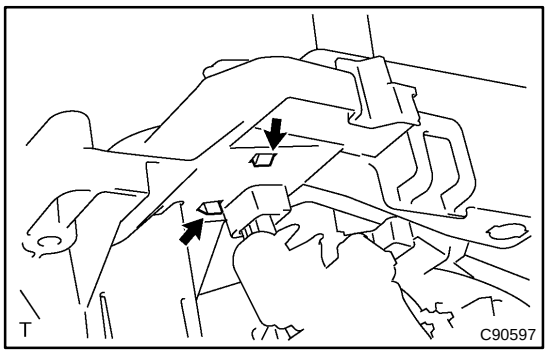

23. REMOVE SHIFT LOCK RELEASE BUTTON

(a) While pressing the 2 claws, remove the shift lock release button and shift lock release spring.

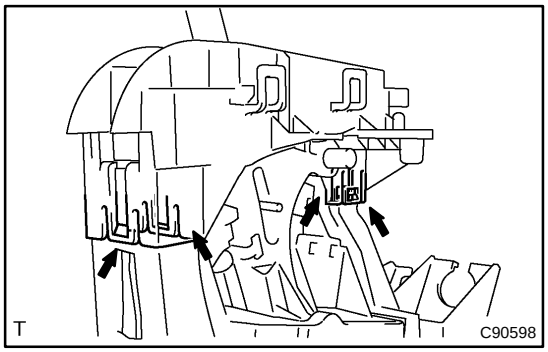

24. REMOVE POSITION INDICATOR HOUSING LOWER

(a) Using a screwdriver, release the 4 claws and remove the position indicator housing lower.

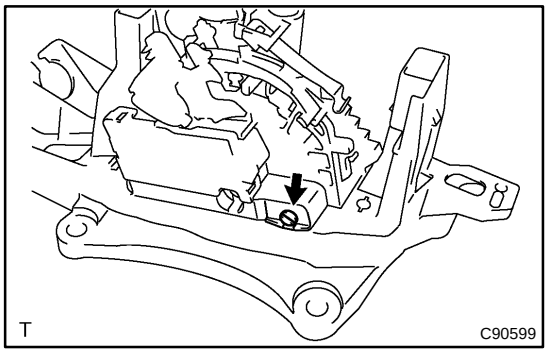

25. REMOVE SHIFT LOCK CONTROL UNIT ASSY

(a) Remove the toggle lever support pin and shift lock control unit assy.

26. REMOVE SHIFT LEVER INSERT NO.1

(a) Remove the 4 shift lever No.1 inserts from the shift lever control plate.

27. INSTALL SHIFT LEVER INSERT NO.1

(a) Install the 4 shift lever No.1 inserts to the shift lever control plate.

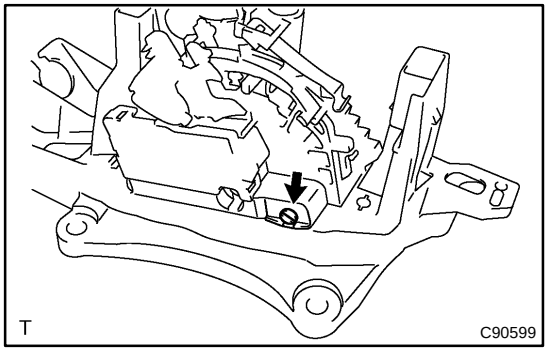

28. INSTALL SHIFT LOCK CONTROL UNIT ASSY

(a) Install the shift lock control unit assy and toggle lever support pin.

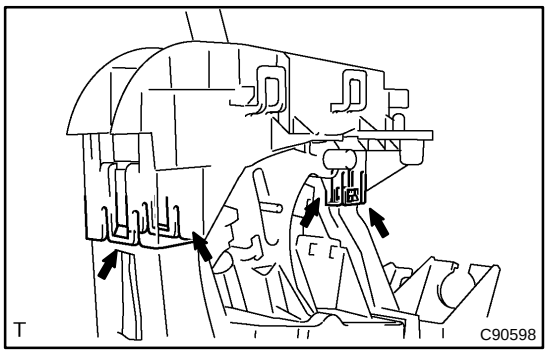

29. INSTALL POSITION INDICATOR HOUSING LOWER

(a) Install the position indicator housing lower.

HINT:

Fit the claws securely.

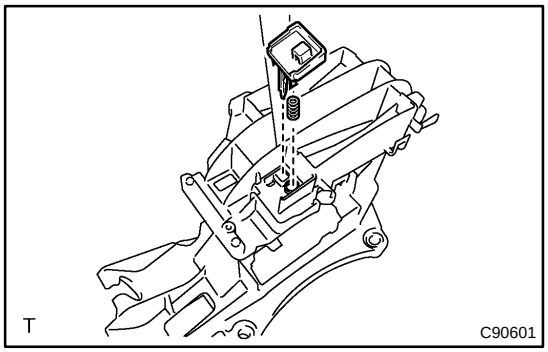

30. INSTALL SHIFT LOCK RELEASE BUTTON

(a) Apply MP grease to the shift lock release spring and shift lock release button.

(b) Install the shift lock release button and shift lock release spring to the position indicator housing lower.

HINT:

Fit the claws securely.

31. INSTALL POSITION INDICATOR SLIDE COVER

32. INSTALL POSITION INDICATOR HOUSING COVER

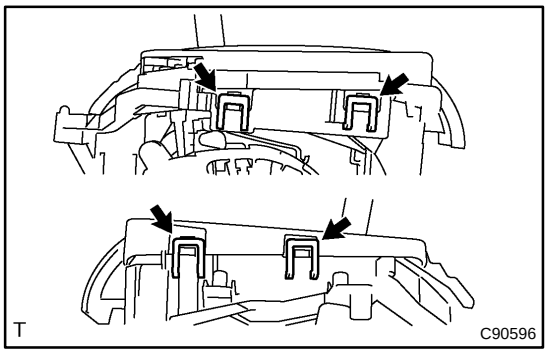

33. INSTALL POSITION INDICATOR HOUSING UPPER

(a) Install the control position indicator housing upper.

HINT:

Fit the claws securely.

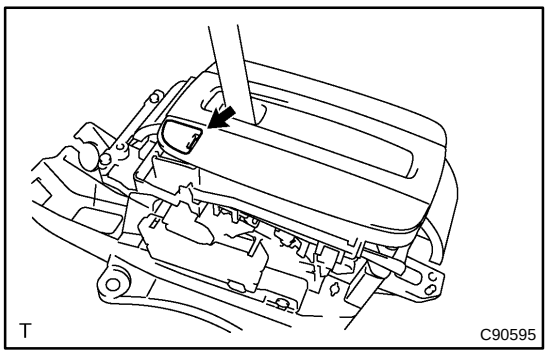

34. INSTALL SHIFT LOCK RELEASE BUTTON COVER

(a) Install the shift lock release button cover to the position indicator housing upper.

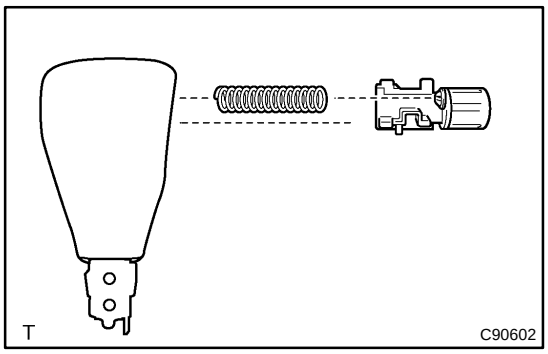

35. INSTALL SHIFT LEVER KNOB BUTTON

(a) Apply MP grease to the shift lever knob button and compression spring and install them to the shift lever knob.

HINT:
Fit the claws securely.

36. INSTALL TRANSMISSION CONTROL SWITCH

(a) Install the transmission control switch to the shift lever knob.

HINT:
Fit the claws securely.

37. INSTALL POSITION INDICATOR SLIDE COVER

(a) Install the position indicator slide cover to the shift lever.

38. INSTALL FLOOR SHIFT SHIFT LEVER KNOB SUB–ASSY

(a) Install the wire harness of the transmission control switch.

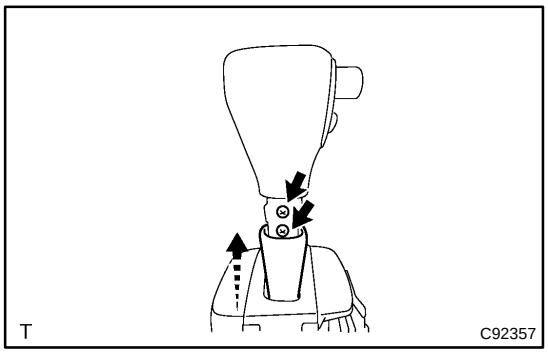

(b) Install the shift lever knob to the shift lever with 2 screws.
(c) Install the position indicator slide cover to the shift lever knob.

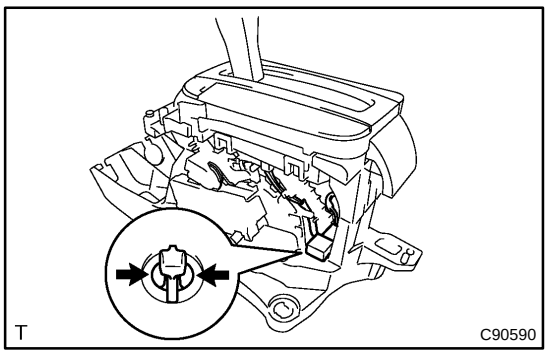

39. INSTALL INDICATOR LAMP WIRE SUB–ASSY

(a) Install the indicator lamp bulb and indicator lamp cap to the indicator lamp wire.
(b) Connect the transmission control switch wire harness to the indicator lamp wire harness connector.
(c) Install the indicator lamp wire to the position indicator housing lower.
(d) Install the indicator lamp wire harness and connector as shown in the illustration.

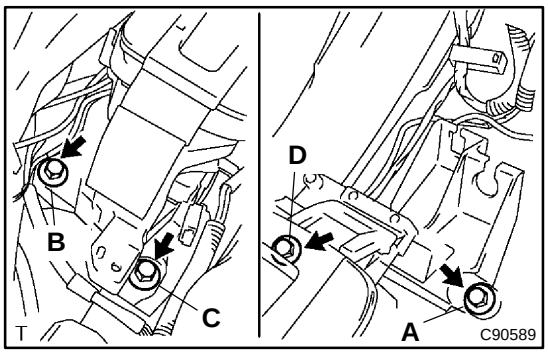

40. INSTALL FLOOR SHIFT ASSY

(a) Install the floor shift assy to the vehicle with the 4 bolts.
Torque: 11.8 N·m (122 kgf·cm, 9 ft·lbf)

HINT:

Tighten them in the order, A, B, C and D.

(b) Connect the transmission control switch connector.

(c) Connect the shift lock control computer connector.

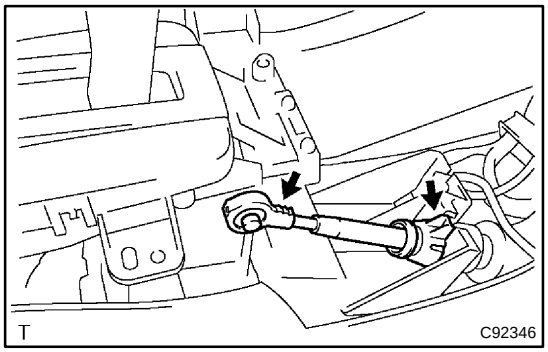

41. CONNECT FLOOR SHIFT CABLE TRANSMISSION CONTROL SHIFT

(a) Connect the floor shift cable to the floor shift assy.

HINT:

- Install it with the uneven surface facing to up.
- Fit the claws securely.

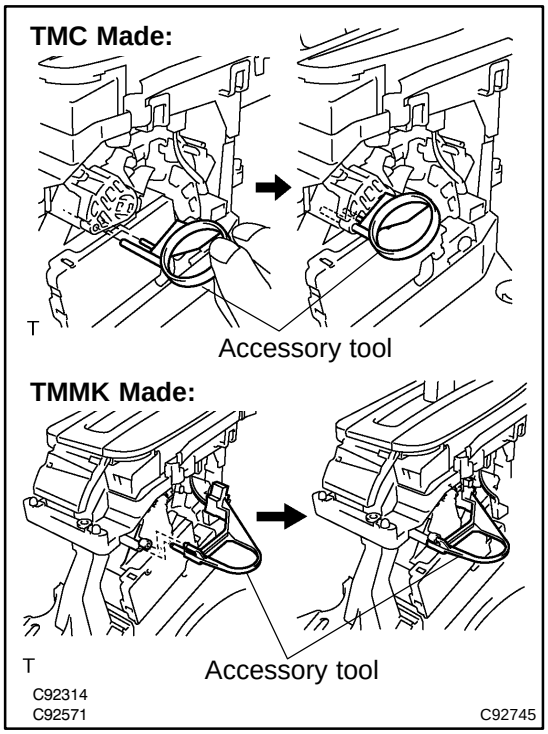

42. CONNECT FLOOR SHIFT PARKING LOCK CABLE ASSY

(a) Set the accessory tool.

(1) Shift the shift lever to P position and turn the ignition switch to LOCK. (TMC made)

(2) Shift the shift lever to N position and turn the ignition switch to ACC. (TMMK made)

(3) Set the accessory tool to the shift lock control unit assy as shown in the illustration.

Accessory tool parts No.:
TMC Made: 33693–33010
TMMK Made: 33693–06010

HINT:

Only in the case of reusing the shift lock control unit assy.

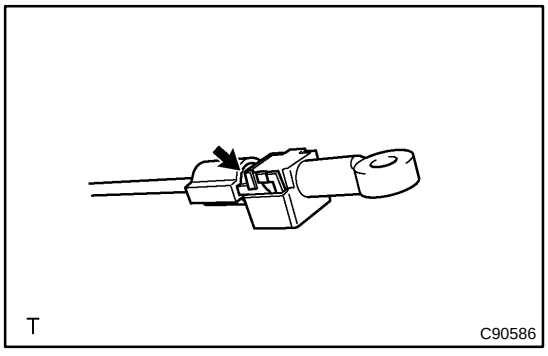

(b) Using a screwdriver, unlock the claw of the lock key of automatic adjustment part.

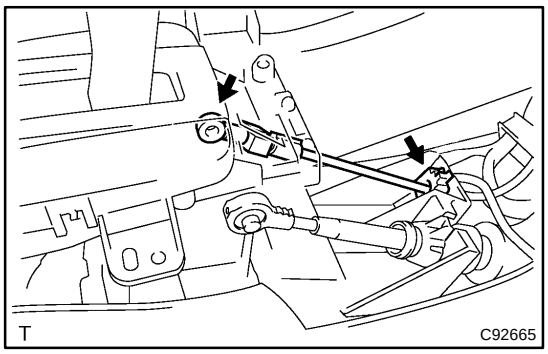

(c) Insert the lever pin into the hole in the floor shift parking lock cable.

HINT:

Fit the claws securely.

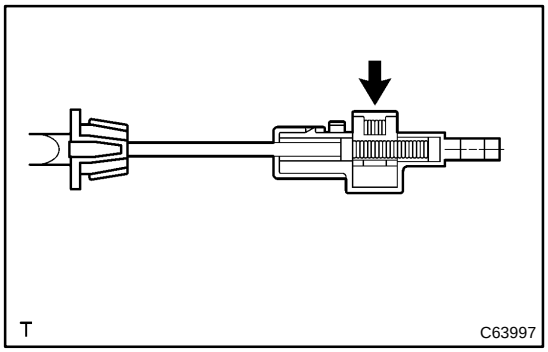

(d) Lock the lock key.

HINT:

- At this time, the shift lever should be in P position and the ignition key should be set to LOCK. (TMC Made)
- At this time, the shift lever should be in N position and the ignition key should be set to ACC. (TMMK Made)

(e) Remove the accessory tool.

Accessory tool parts NO.:

TMC Made: 33693–33010

TMMK Made: 33693–06010

43. CHECK KEY INTERLOCK OPERATION(See page 40–37)

44. CHECK SHIFT LOCK OPERATION(See page 40–37)

45. CHECK SHIFT LOCK RELEASE BUTTON OPERATION(See page 40–37)

46. INSTALL CONSOLE BOX DUCT NO.1

47. INSTALL AIR DUCT REAR NO.2

48. INSTALL AIR DUCT REAR NO.1

49. INSTALL CONSOLE BOX FRONT

50. INSTALL CONSOLE PANEL UPPER

51. INSTALL INSTRUMENT PANEL CUP HOLDER TRAY(W/O ASHTRAY)

52. INSTALL INSTRUMENT PANEL ASH RECEPTACLE ASSY(W/ ASHTRAY)

53. INSTALL RR CONSOLE BOX

54. INSTALL CONSOLE BOX CARPET

55. INSTALL CONSOLE PANEL UPPER REAR

ADJUSTMENT

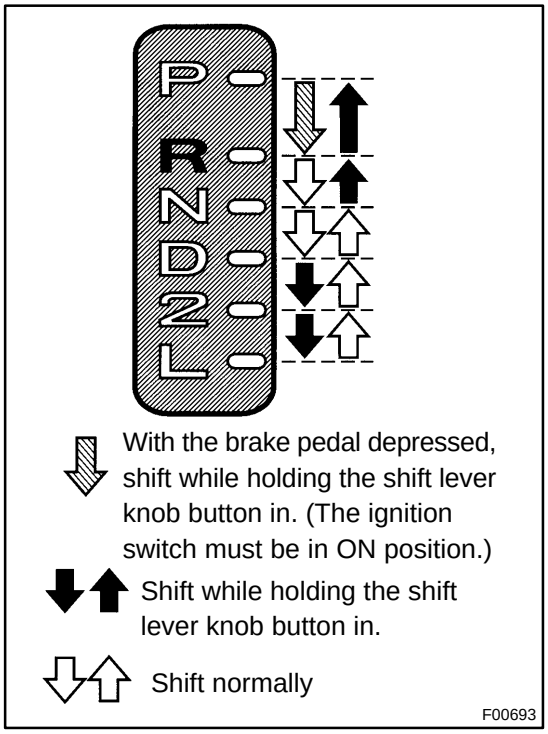

1. INSPECT SHIFT LEVER POSITION

(a) When shifting the shift lever to each position, make sure that it moves smoothly, and the position indicator displays correctly.

Positions which can be shifted without pressing the shift lever knob button

R → N → D, L → 2 → D → N

Positions which can be operated only while pressing the shift lever knob button

D → 2 → L, N → R → P

Positions which can be operated only while pressing the shift lever knob button, ignition switch ON and brake pedal depressed

P → R

(b) Start the engine and make sure that the vehicle moves forward when shifting the lever from N to D position, and moves rearward when shifting to R position.

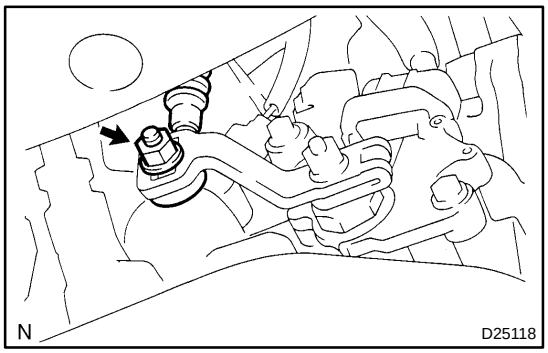

2. ADJUST SHIFT LEVER POSITION

(a) Loosen the nut on the control shaft lever.

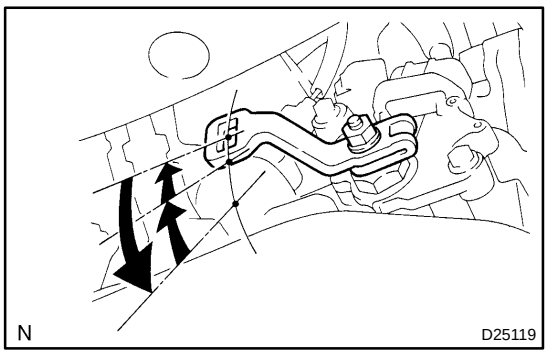

(b) Push the control shaft fully downward.

(c) Return the control shaft lever 2 notches to N position.

(d) Set the shift lever to N position.

(e) While holding the shift lever lightly toward the R position side, tighten the shift lever nut.

Torque: 14.7 N·m (150 kgf·cm, 10 ft·lbf)

(f) Start the engine and make sure that the vehicle moves forward when shifting the lever from N to D position and moves rearward when shifting it to R position.

FLOOR SHIFT PARKING LOCK CABLE ASSY

400FM–01

REPLACEMENT

1. PRECAUTION
2. DISCONNECT BATTERY NEGATIVE TERMINAL
3. REMOVE STEERING WHEEL COVER LOWER NO.2
   (See page 50–6)
4. REMOVE STEERING WHEEL COVER LOWER NO.3(W/O STEERING PAD SWITCH 4 SPOKE STEERING WHEEL)
   (See page 50–6)
5. REMOVE CONNECTOR COVER(W/ STEERING PAD SWITCH 4 SPOKE STEERING WHEEL)
   (See page 50–6)
6. REMOVE STEERING WHEEL COVER LOWER NO.3(3 SPOKE STEERING WHEEL ASSY)
   (See page 50–6)
7. PLACE FRONT WHEELS FACING STRAIGHT AHEAD
8. REMOVE HORN BUTTON ASSY
   (See page 50–9 or 50–22)
9. REMOVE STEERING WHEEL ASSY
   (See page 50–9 or 50–22)
   SST 09950–50013 (09951–05010, 09952–05010, 09953–05020, 09954–05021)
10. REMOVE INSTRUMENT CLUSTER FINISH PANEL
    (See page 71–12)
11. REMOVE STEERING COLUMN COVER
    (See page 50–9 or 50–22)
12. REMOVE FRONT DOOR SCUFF PLATE LH
    (See page 71–12)
13. REMOVE COWL SIDE TRIM SUB–ASSY LH
    (See page 71–12)
14. REMOVE INSTRUMENT PANEL COIN BOX SUB–ASSY
    (See page 71–12)
15. REMOVE INSTRUMENT PANEL SUB–ASSY UPPER
    (See page 71–12)
16. REMOVE INSTRUMENT PNL INSERT SUB–ASSY LWR LH
    (See page 71–12)
17. REMOVE CONSOLE PANEL UPPER REAR
    (See page 71–12)
18. REMOVE CONSOLE BOX CARPET
    (See page 71–12)
19. REMOVE RR CONSOLE BOX(See page 71–12)
20. REMOVE INSTRUMENT PANEL CUP HOLDER TRAY(W/O ASHTRAY)
    (See page 71–12)
21. REMOVE INSTRUMENT PANEL ASH RECEPTACLE ASSY(W/ ASHTRAY)
    (See page 71–12)
22. REMOVE CONSOLE PANEL UPPER
    (See page 71–12)
23. REMOVE CONSOLE BOX FRONT
    (See page 71–12)
24. REMOVE AIR DUCT REAR NO.2
    (See page 55–29)

25. REMOVE AIR DUCT REAR NO.1
(See page 55–29)

26. REMOVE CONSOLE BOX DUCT NO.1
(See page 55–29)

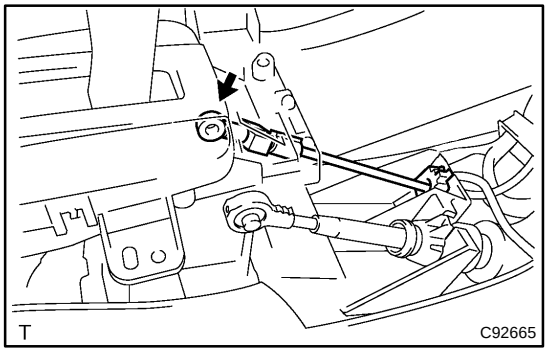

27. REMOVE FLOOR SHIFT PARKING LOCK CABLE ASSY

(a) Disconnect the parking lock cable end from the lever pin of the floor shift assembly.

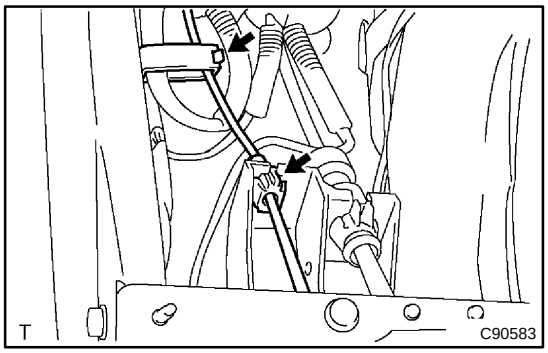

(b) Using a screwdriver, disconnect the parking lock cable from the floor shift assembly and clamp.

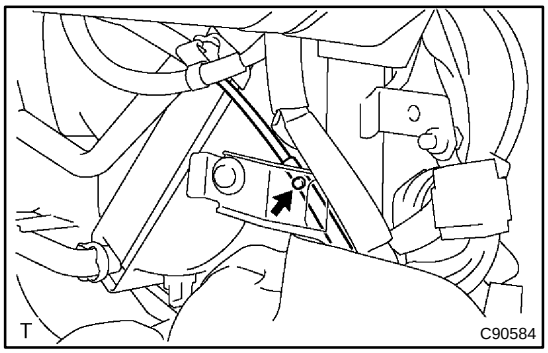

(c) Disconnect the cable clamp.
(d) Turn the ignition switch to ACC or ON.

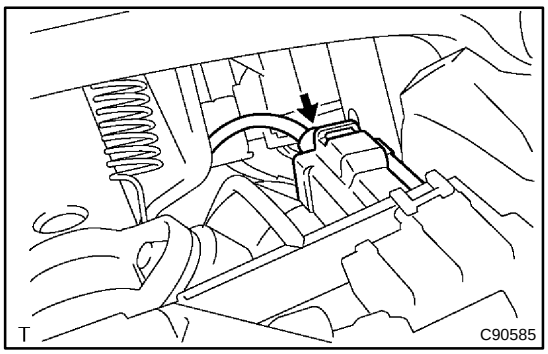

(e) Using a screwdriver, remove the cable from the upper bracket.

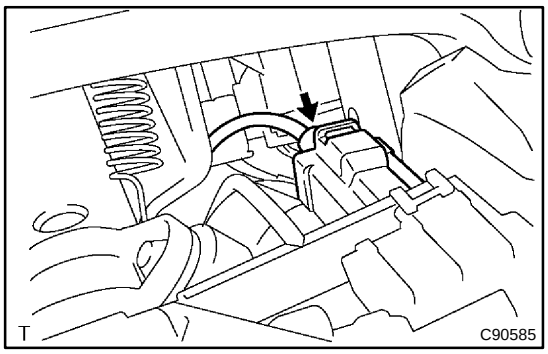

28. INSTALL FLOOR SHIFT PARKING LOCK CABLE ASSY

(a) Turn the ignition switch to ACC or ON.
(b) Connect the cable to the upper bracket.

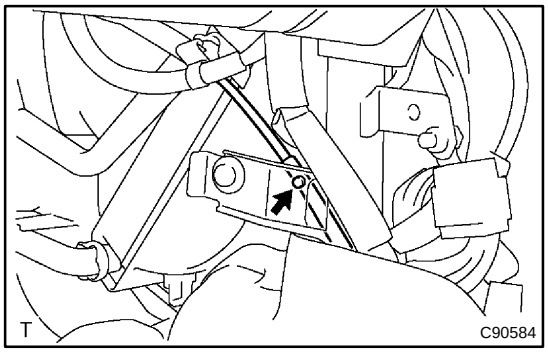

(c) Connect the cable clamp.

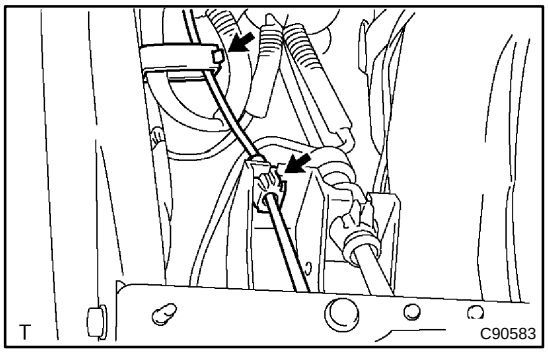

(d) Insert the slide cap into the through hole and install.

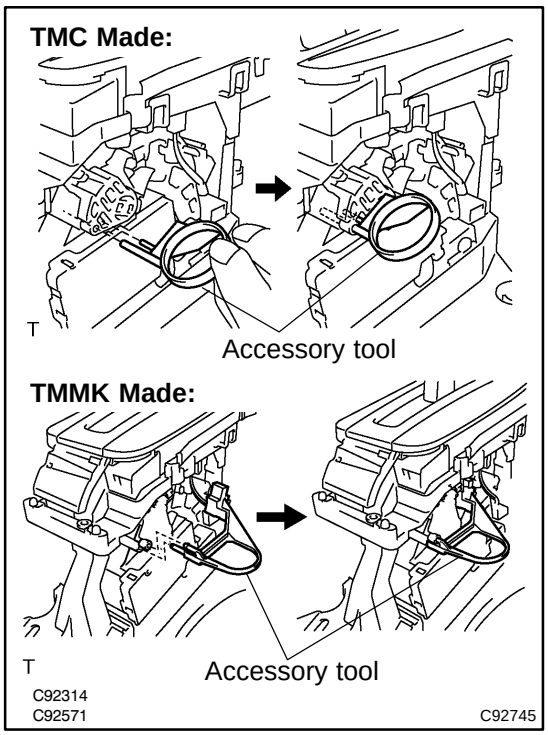

(e) Set the accessory tool.
(1) Shift the shift lever to P position and turn the ignition switch to LOCK. (TMC made)
(2) Shift the shift lever to N position and turn the ignition switch to ACC. (TMMK made)
(3) Set the accessory tool to the shift lock control unit assy.

Accessory tool parts No.:
TMC Made: 33693–33010
TMMK Made: 33693–06010

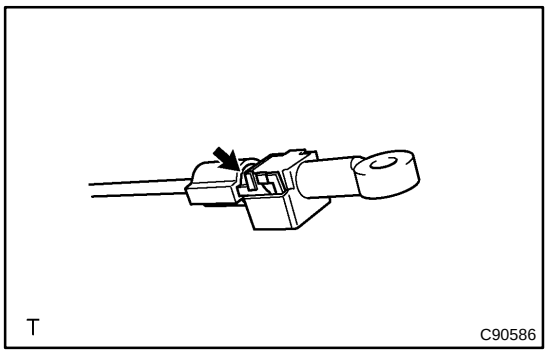

(f) Using a screwdriver, unlock the claw of the lock key of automatic adjustment part.

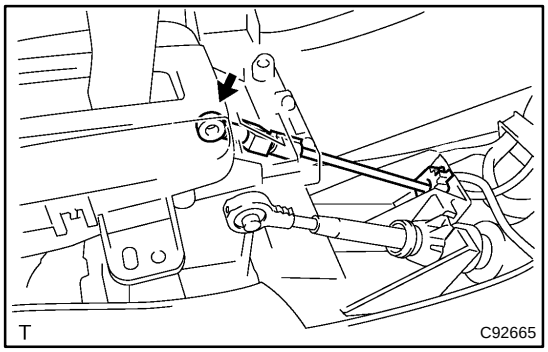

(g) Insert the lever pin into the hole in the floor shift parking lock cable.

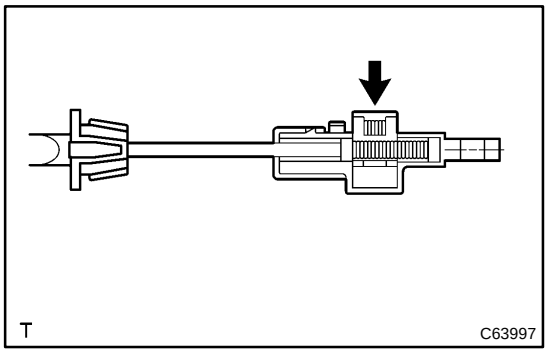

(h) Lock the lock key.

HINT:

- At this time, the shift lever should be in P position and the ignition key should be set to LOCK. (TMC Made)
- At this time, the shift lever should be in N position and the ignition key should be set to ACC. (TMMK Made)

(i) Remove the accessory tool.

Accessory tool parts No.:
TMC Made: 33693–33010
TMMK Made: 33693–06010

29. CHECK KEY INTERLOCK OPERATION(See page 40–37)
30. INSTALL CONSOLE BOX DUCT NO.1
31. INSTALL AIR DUCT REAR NO.1
32. INSTALL AIR DUCT REAR NO.2
33. INSTALL CONSOLE BOX FRONT
34. INSTALL CONSOLE PANEL UPPER
35. INSTRUMENT PANEL CUP HOLDER TRAY(W/O ASHTRAY)
36. INSTRUMENT PANEL ASH RECEPTACLE ASSY(W/ ASHTRAY)
37. INSTALL RR CONSOLE BOX
38. INSTALL CONSOLE BOX CARPET
39. INSTALL CONSOLE PANEL UPPER REAR

40. INSTALL INSTRUMENT PNL INSERT SUB–ASSY LWR LH

41. INSTALL INSTRUMENT PANEL SUB–ASSY UPPER

42. INSTALL INSTRUMENT PANEL COIN BOX SUB–ASSY

43. INSTALL COWL SIDE TRIM SUB–ASSY LH

44. INSTALL FRONT DOOR SCUFF PLATE LH

45. INSTALL STEERING COLUMN COVER
(See page 50–9 or 50–22)
46. INSTALL INSTRUMENT CLUSTER FINISH PANEL

47. INSTALL STEERING WHEEL ASSY
(See page 50–9 or 50–22)
48. INSPECT STEERING WHEEL CENTER POINT
49. INSTALL HORN BUTTON ASSY
(See page 50–9 or 50–22)
50. INSTALL STEERING WHEEL COVER LOWER NO.2
(See page 50–6)
51. INSTALL STEERING WHEEL COVER LOWER NO.3(W/O STEERING PAD SWITCH 4 SPOKE STEERING WHEEL)
(See page 50–6)
52. INSTALL CONNECTOR COVER(W/ STEERING PAD SWITCH 4 SPOKE STEERING WHEEL)
(See page 50–6)
53. INSTALL STEERING WHEEL COVER LOWER NO.3(3 SPOKE STEERING WHEEL ASSY)
(See page 50–6)
54. CONNECT BATTERY NEGATIVE TERMINAL
55. INSPECT SRS WARNING LIGHT(See page 05–690)

FLOOR SHIFT CABLE TRANSMISSION CONTROL SHIFT

400FN–01

REPLACEMENT

1. **REMOVE INSTRUMENT PANEL SAFETY PAD SUB–ASSY**
   (See page 71–12)
2. **REMOVE AIR CONDITIONING RADIATOR ASSY**
   (See page 55–29)
3. **REMOVE AIR BAG SENSOR ASSY CENTER**
   (See page 60–56)
4. **REMOVE BATTERY**
5. **REMOVE AIR CLEANER ASSY**
6. **REMOVE AIR CLEANER HOSE NO.1**
7. **REMOVE INTAKE AIR RESONATOR SUB–ASSY**

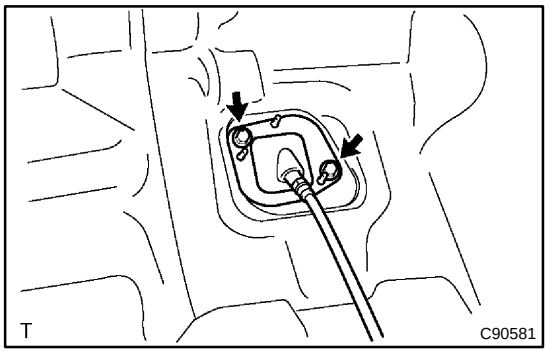

8. **DISCONNECT SHIFT CABLE GROMMET RETAINER NO.2**

(a) Remove the 2 bolts and disconnect shift cable grommet retainer No.2.

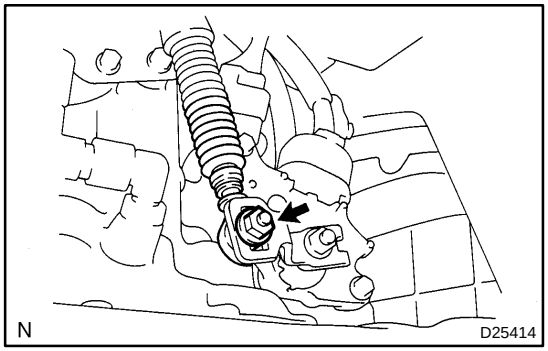

9. **REMOVE FLOOR SHIFT CABLE TRANSMISSION CONTROL SHIFT**

(a) Remove the nut from the control shift lever.
(b) Disconnect the control cable from the control shift lever.

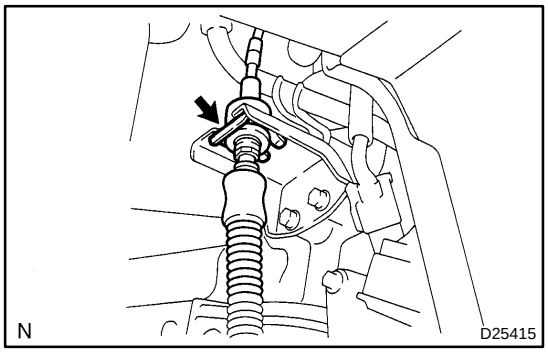

(c) Remove the clip and disconnect the control cable from the control cable bracket.

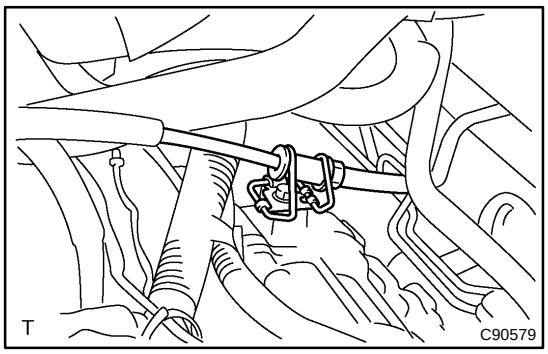

(d) Disconnect the control cable from the control cable clamp.

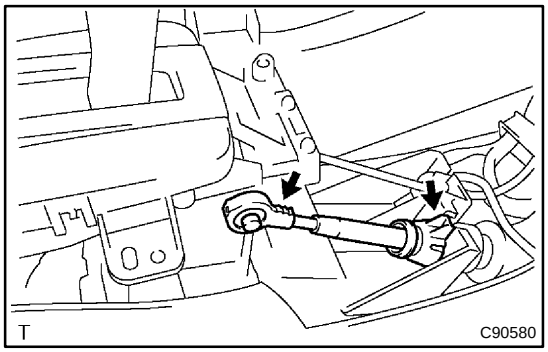

(e) Disconnect the floor shift cable from the transmission floor shift assy.
(f) Pull out the control cable from the body.
(g) Remove the shift cable grommet retainer No. 2.

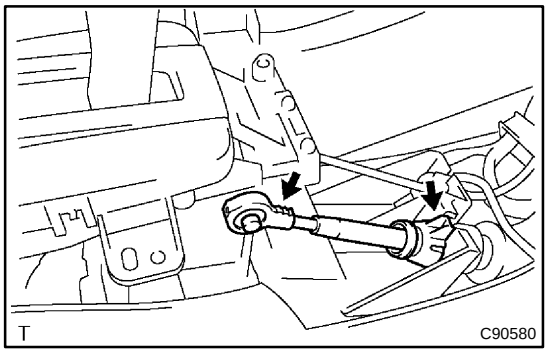

10. INSTALL FLOOR SHIFT CABLE TRANSMISSION CONTROL SHIFT

(a) Put in the control cable to the body.
(b) Install the shift cable grommet retainer No.2 to the floor shift cable.
(c) Install the floor shift cable as shown in the illustration.

HINT:

- Install it with the uneven surface facing to up.
- Fit the claws securely.

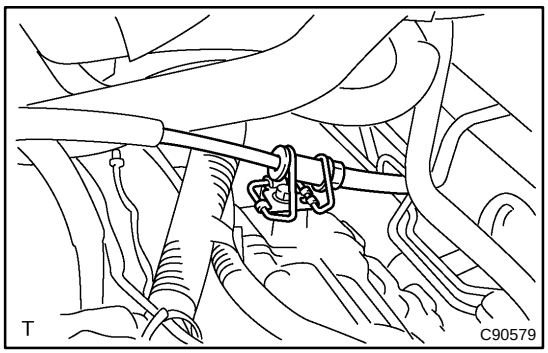

(d) Connect the control cable to the control cable clamp.

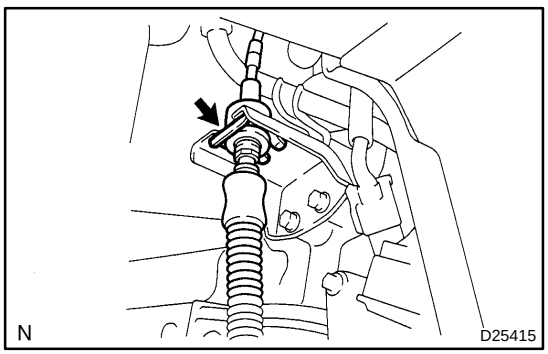

(e) Install the control cable and a new clip to the bracket.

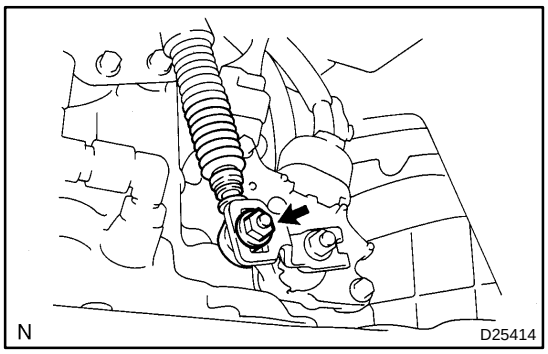

(f) Temporarily install the control cable to the control shaft lever with nuts.

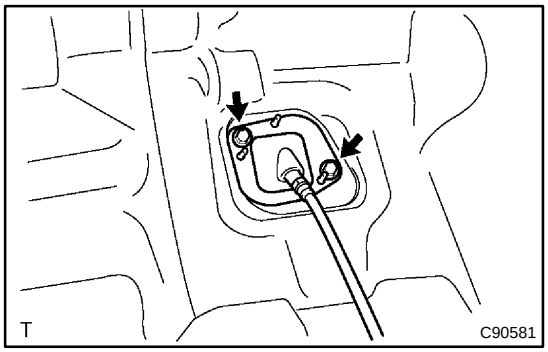

11. INSTALL SHIFT CABLE GROMMET RETAINER NO.2

(a) Install the shift cable grommet retainer No.2 with the 2 bolts.
Torque: 4.9 N·m (50 kgf·cm, 43 in.·lbf)

12. INSTALL AIR BAG SENSOR ASSY CENTER
(See page 60–56)

13. INSTALL AIR CONDITIONING RADIATOR ASSY

14. ADJUST SHIFT LEVER POSITION(See page 40–47)

15. INSPECT SHIFT LEVER POSITION(See page 40–47)

16. INSTALL INTAKE AIR RESONATOR SUB–ASSY

17. INSTALL AIR CLEANER HOSE NO.1

18. INSTALL AIR CLEANER ASSY

19. INSTALL BATTERY

MANUAL TRANSAXLE SYSTEM

41052–01

PROBLEM SYMPTOMS TABLE

Use the table below to help you determine the cause of the problem. The numbers in the column of ”Suspect Area” indicate the possibility of the problem in descending order. Therefore, check the areas in this order. If necessary, replace or exchange these parts.

Symptom	Suspect Area	See page
Noise	1. Oil (Level low)	41–2
	2. Oil (Wrong)	41–2
	3. Gear (Worn or damaged)	41–15
	4. Bearing (Worn or damaged)	41–15
Oil leakage	1. Oil (Level too high)	41–2
	2. Gasket (Damaged)	41–15
	3. Oil seal (Worn or damaged)	41–15
	4. O–Ring (Worn or damaged)	41–15
Hard to shift or will not shift	1. Control cable (Faulty)	41–7 41–9
	2. Synchronizer ring (Worn or damaged)	41–15
	3. Shift key spring (Damaged)	41–15
Jumps out of gear	1. Locking ball spring (Damaged)	41–15
	2. Shift fork (Worn)	41–15
	3. Gear (Worn or damaged)	41–15
	4. Bearing (Worn or damaged)	41–15

MANUAL TRANSAXLE OIL

41051–01

ON–VEHICLE INSPECTION

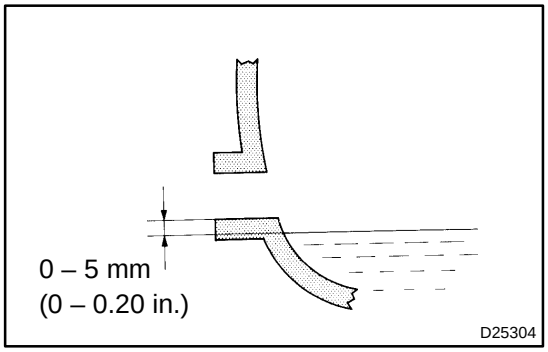

1. CHECK TRANSAXLE OIL

(a) Stop the vehicle on the level place.

(b) Remove the transmission filler plug and gasket.

(c) Check that the oil surface is within 5 mm (0.20 in.) from the lowest position of the inner surface of the transmission filler plug opening.

NOTICE:

- **Excessively large or small amount of oil may cause troubles.**
- **After exchanging oil, drive the vehicle and check the oil level.**

(d) Check for oil leakage when the oil level is low.

(e) Install the transmission filler plug and new gasket.
Torque: 49 N·m (500 kgf·cm, 36 ft·lbf)

FRONT DIFFERENTIAL OIL SEAL

4104T–02

REPLACEMENT

1. **DRAIN MANUAL TRANSAXLE OIL**
   Torque: 49 N·m (500 kgf·cm, 36 ft·lbf)
2. **REMOVE FRONT WHEEL**
3. **REMOVE FRONT DRIVE SHAFT ASSY LH**
   (See page 30–8)
   SST 09520–01010, 09520–24010 (09520–32040)
4. **REMOVE FRONT DRIVE SHAFT ASSY RH**
   (See page 30–8)

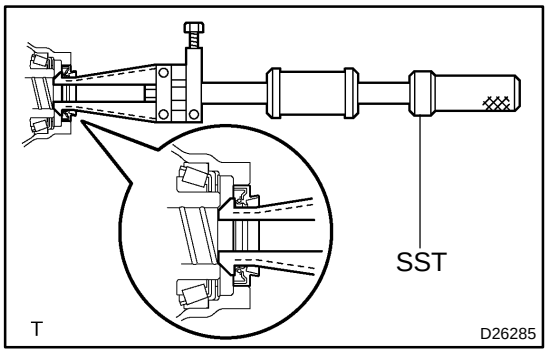

5. **REMOVE FRONT TRANSAXLE CASE COVER OIL SEAL**

(a) Using SST, remove the oil seal.
SST 09308–00010

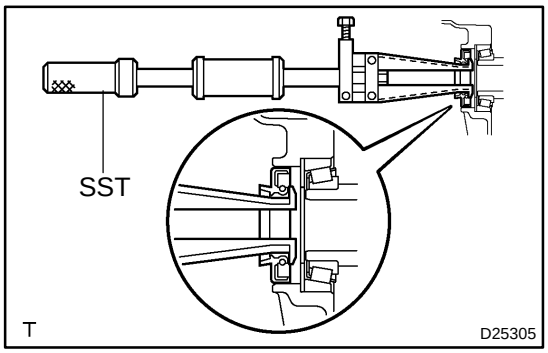

6. **REMOVE TRANSMISSION CASE OIL SEAL**

(a) Using SST, remove the oil seal.
SST 09308–00010

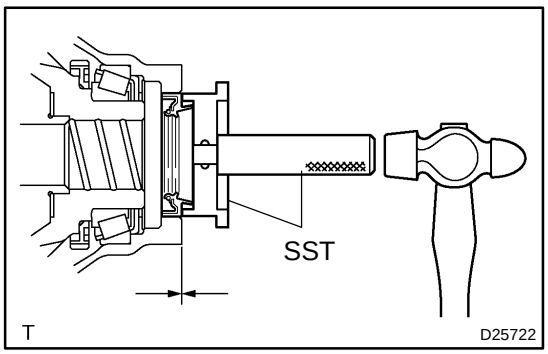

7. **INSTALL FRONT TRANSAXLE CASE COVER OIL SEAL**

(a) Coat a new oil seal lip with MP grease.
(b) Using SST and a hammer, install the oil seal.
SST 09608–10010, 09950–70010 (09951–07200)
Drive in depth: 0 ± 0.5 mm (0 ± 0.020 in.)

NOTICE:
Be careful not to damage the oil seal lip.

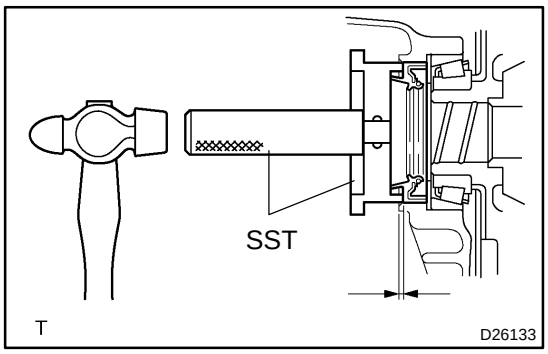

8. INSTALL TRANSMISSION CASE OIL SEAL

(a) Coat a new oil seal lip with MP grease.
(b) Using SST and a hammer, install the oil seal.
SST 09608–32010, 09950–70010 (09951–07200)
Drive in depth: 3.5 ± 0.5 mm (0.138 ± 0.020 in.)

NOTICE:
Be careful not to damage the oil seal lip.

9. INSTALL FRONT DRIVE SHAFT ASSY LH
(See page 30–8)

10. INSTALL FRONT DRIVE SHAFT ASSY RH
(See page 30–8)

11. INSTALL FRONT WHEEL
Torque: 103 N·m (1,050 kgf·cm, 76 ft·lbf)

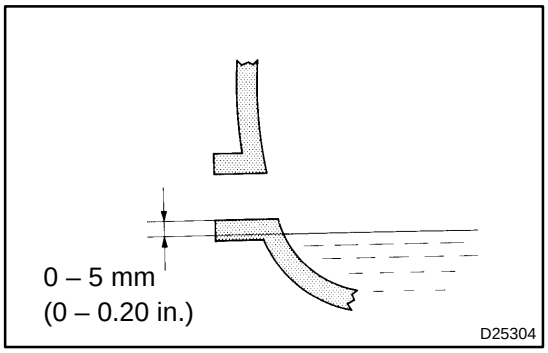

12. ADD MANUAL TRANSAXLE OIL
Oil grade: API GL–4 or GL–5
Viscosity: SAE 75W–90
Capacity: 2.5 liters (2.6 US qts, 2.2 Imp. qts)
Torque: 49 N·m (500 kgf·cm, 36 ft·lbf)

13. INSPECT AND ADJUST MANUAL TRANSAXLE OIL(See page 41–2)
14. INSPECT AND ADJUST FRONT WHEEL ALIGNMENT(See page 26–5)
15. CHECK ABS SPEED SENSOR SIGNAL(See page 05–404)

FLOOR SHIFT SHIFT LEVER ASSY

4104U–01

REPLACEMENT

1. REMOVE FLOOR SHIFT SHIFT LEVER KNOB SUB–ASSY

2. REMOVE RR CONSOLE BOX

3. REMOVE CONSOLE BOX FRONT
(See page 71–12)

4. REMOVE AIR DUCT REAR NO.1
(See page 55–29)

5. REMOVE AIR DUCT REAR NO.2
(See page 55–29)

6. DISCONNECT FLOOR SHIFT CABLE TRANSMISSION CONTROL SELECT

(a) Remove the clip and separate the top of the select cable from the shift lever assy.
(b) Turn the lock and separate the select cable from the shift lever retainer.

7. DISCONNECT FLOOR SHIFT CABLE TRANSMISSION CONTROL SHIFT

(a) Separate the top of the shift cable from the shift lever assy.
(b) Turn the lock and separate the shift cable from the shift lever retainer.

8. REMOVE FLOOR SHIFT SHIFT LEVER ASSY

(a) Remove the 4 bolts and shift lever assy.

9. INSTALL FLOOR SHIFT SHIFT LEVER ASSY

(a) Install the shift lever assy with 4 the bolts.
Torque: 12 N·m (122 kgf·cm, 9 ft·lbf)

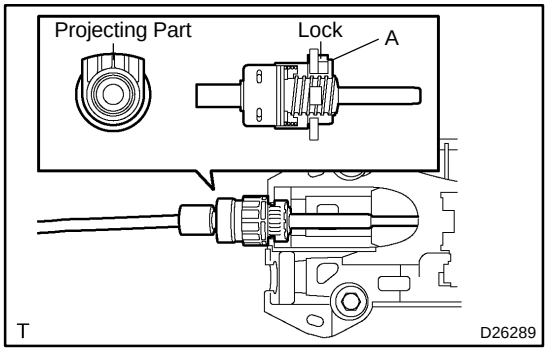

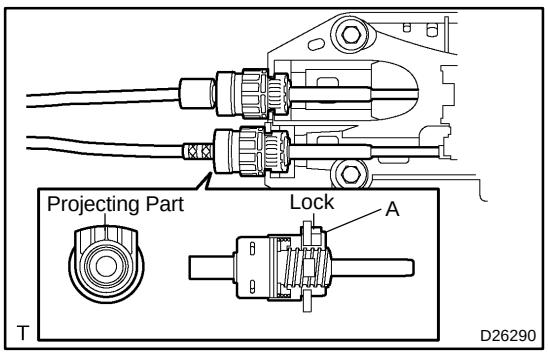

10. CONNECT FLOOR SHIFT CABLE TRANSMISSION CONTROL SHIFT

(a) Connect the shift cable to the shift lever retainer.

NOTICE:
- **The projecting part of the cable outer should face upward when the shift cable is installed.**
- **Make sure that after installation the cable outer lock is projecting from A shown in the illustration.**

(b) Install the top of the shift cable to the shift lever assy.

11. CONNECT FLOOR SHIFT CABLE TRANSMISSION CONTROL SELECT

(a) Connect the select cable to the shift lever retainer.

NOTICE:
- **The projecting part of the cable outer should face upward when the select cable is installed.**
- **Make sure that after installation the cable outer lock is projecting from A shown in the illustration.**

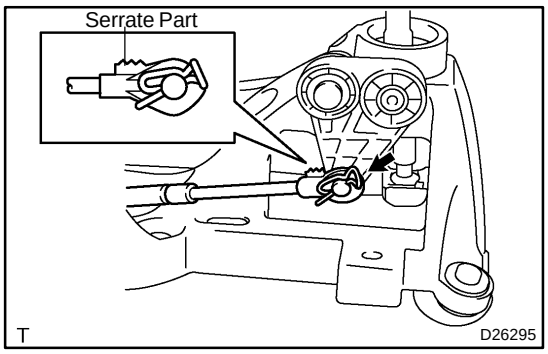

(b) Connect the top of the select cable to the shift lever assy and install the clip.

NOTICE:

- **The serrate part of the select cable point should face upward when the select cable point is connected.**
- **the clip should be inserted to the direction shown in the illustration.**

12. INSTALL AIR DUCT REAR NO.2
(See page 55–29)

13. INSTALL AIR DUCT REAR NO.1
(See page 55–29)

14. REMOVE CONSOLE BOX FRONT
(See page 71–12)

15. REMOVE RR CONSOLE BOX

16. REMOVE FLOOR SHIFT SHIFT LEVER KNOB SUB–ASSY

FLOOR SHIFT CABLE TRANSMISSION CONTROL SHIFT

4104V–01

REPLACEMENT

1. **REMOVE INSTRUMENT PANEL SAFETY PAD SUB–ASSY**
   (See page 71–12)
2. **REMOVE AIR CONDITIONING RADIATOR ASSY**
   (See page 55–29)
3. **REMOVE AIR BAG SENSOR ASSY CENTER**
   (See page 60–56)

4. REMOVE FLOOR SHIFT CABLE TRANSMISSION CONTROL SHIFT

(a) Remove the clip and washer and separate the top of the shift cable from the transaxle.
(b) Remove the clip and shift cable from the control cable bracket.
(c) Turn the lock and separate the shift cable from the shift lever retainer.
(d) Separate the top of the shift cable from the shift lever assy.

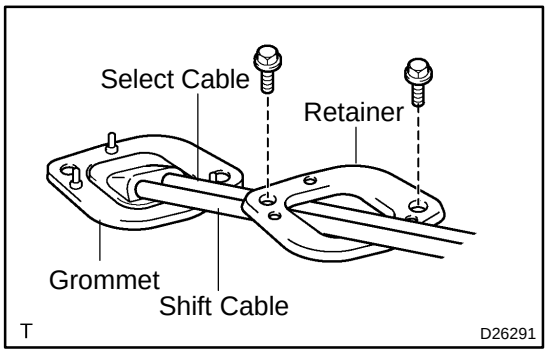

(e) Remove the 2 retainer set bolts from the floor.
(f) Separate the retainer from the grommet.
(g) Remove the select cable from the grommet.
(h) Remove the shift cable through the floor hole and retainer.

5. INSTALL FLOOR SHIFT CABLE TRANSMISSION CONTROL SHIFT

(a) Put the shift cable through the floor hole and retainer.
(b) Install the select cable to the grommet.
(c) Install the retainer to the grommet.

NOTICE:
Fit 3 projections of the grommet into 3 holes of the retainer.

(d) Install the 2 retainer set bolts.
Torque: 5.0 N·m (51 kgf·cm, 44 in.·lbf)

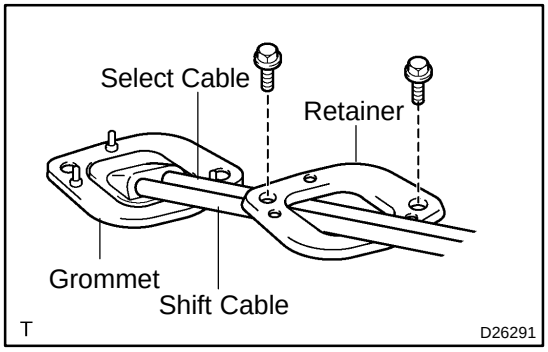

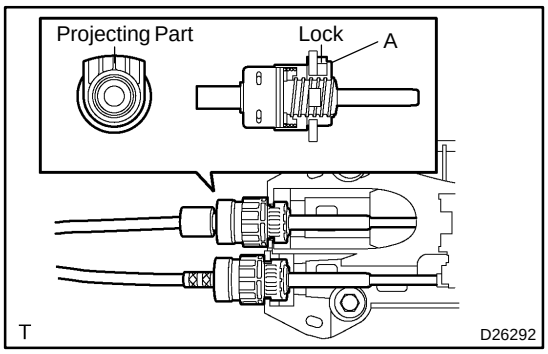

(e) Connect the shift cable to the shift lever retainer.

NOTICE:

- **The projecting part of the cable outer should face upward when the shift cable is installed.**
- **Make sure that after installation the cable outer lock is projecting from A shown in the illustration.**

(f) Install the top of the shift cable to the shift lever assy.

(g) Connect the shift cable to the control cable bracket and install a new clip.

(h) Connect the shift cable to the transaxle and install the washer and clip.

6. INSTALL AIR BAG SENSOR ASSY CENTER (See page 60–56)

7. INSTALL AIR CONDITIONING RADIATOR ASSY (See page 55–29)

8. INSTALL INSTRUMENT PANEL SAFETY PAD SUB–ASSY (See page 71–12)

9. INSPECT SRS WARNING LIGHT(See page 05–690)

FLOOR SHIFT CABLE TRANSMISSION CONTROL SELECT

4104W–01

REPLACEMENT

1. **REMOVE INSTRUMENT PANEL SAFETY PAD SUB–ASSY (See page 71–12)**
2. **REMOVE AIR CONDITIONING RADIATOR ASSY (See page 55–29)**
3. **REMOVE AIR BAG SENSOR ASSY CENTER (See page 60–56)**

4. REMOVE FLOOR SHIFT CABLE TRANSMISSION CONTROL SELECT

(a) Remove the clip and washer and separate the top of the select cable from the transaxle.
(b) Remove the clip and select cable from the control cable bracket.
(c) Turn the lock and separate the select cable from the shift lever retainer.
(d) Remove the clip and separate the top of the select cable from the shift lever assy.

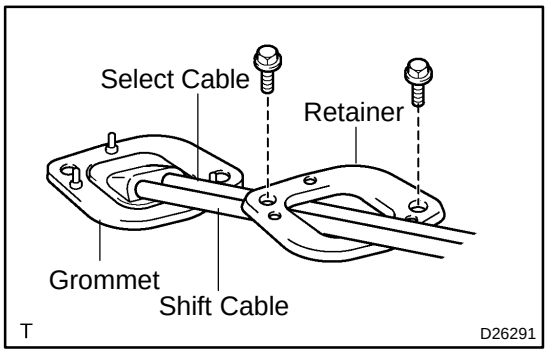

(e) Remove the 2 retainer set bolts from the floor.
(f) Separate the retainer from the grommet.
(g) Remove the select cable from the grommet.
(h) Remove the select cable through the floor hole and retainer.

5. INSTALL FLOOR SHIFT CABLE TRANSMISSION CONTROL SELECT

(a) Put the select cable through the floor hole and retainer.
(b) Install the select cable to the grommet.
(c) Install the retainer to the grommet.

NOTICE:
Fit 3 projections of the grommet into 3 holes of the retainer.

(d) Install the 2 retainer set bolts.
Torque: 5.0 N·m (51 kgf·cm, 44 in.·lbf)

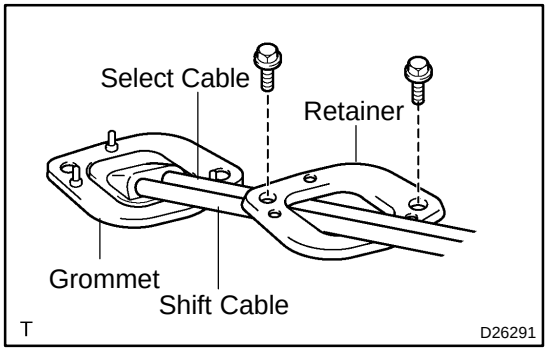

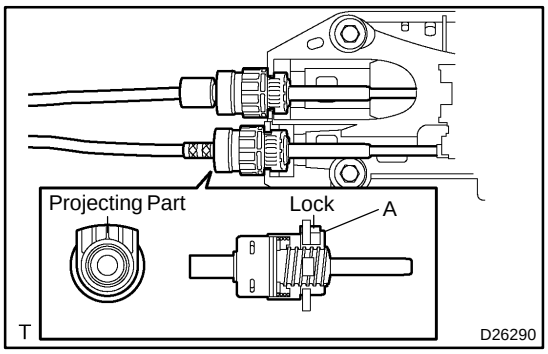

(e) Connect the select cable to the shift lever retainer.

NOTICE:

- **The projecting part of the cable outer should face upward when the select cable is installed.**
- **Make sure that after installation the cable outer lock is projecting from A shown in the illustration.**

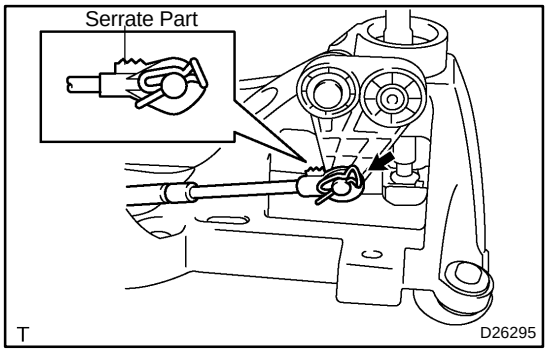

(f) Connect the top of the select cable to the shift lever assy and install the clip.

NOTICE:

- **The serrate part of the select cable point should face upward when the select cable point is connected.**
- **the clip should be inserted to the direction shown in the illustration.**

(g) Connect the top of the select cable to the shift lever assy and install the clip.

(h) Connect the select cable to the control cable bracket and install a new clip.

(i) Connect the select cable to the transaxle and install the washer and clip.

6. INSTALL AIR BAG SENSOR ASSY CENTER (See page 60–56)

7. INSTALL AIR CONDITIONING RADIATOR ASSY (See page 55–29)

8. INSTALL INSTRUMENT PANEL SAFETY PAD SUB–ASSY (See page 71–12)

9. INSPECT SRS WARNING LIGHT(See page 05–690)

MANUAL TRANSAXLE ASSY

400FP–01

REPLACEMENT

1. **REMOVE ENGINE ASSEMBLY WITH TRANSAXLE(See page 14–22)**
2. **REMOVE FRONT DRIVE SHAFT ASSY RH (See page 30–8)**
3. **REMOVE FRONT DRIVE SHAFT ASSY LH (See page 30–8)**

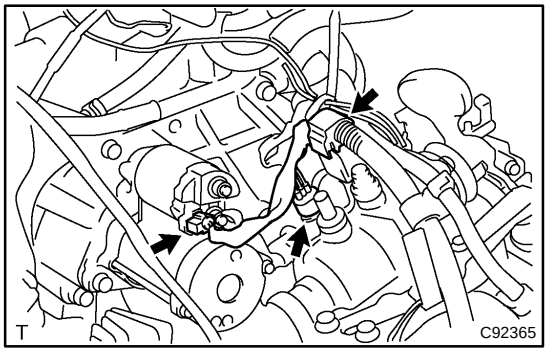

4. DISCONNECT WIRE HARNESS

(a) Disconnect the wire harness clamp.

(b) Disconnect the back–up lamp switch connector and starter connector.

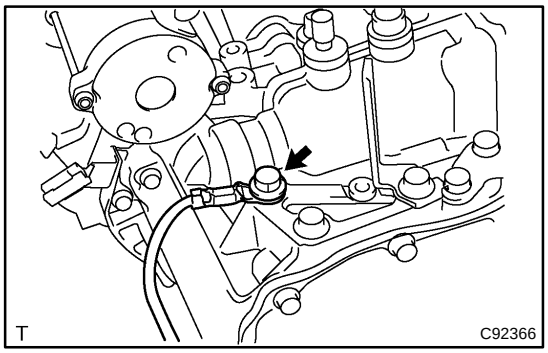

5. REMOVE ENGINE WIRE NO.3

(a) Remove the bolt and engine wire No.3.

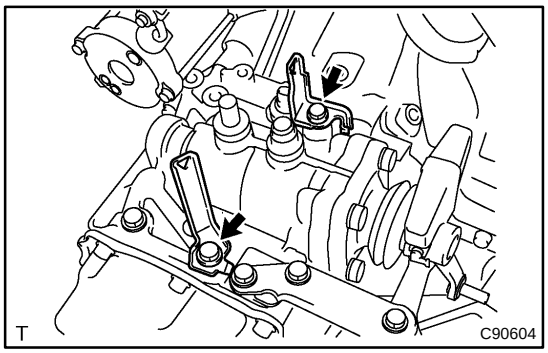

6. REMOVE WIRE HARNESS CLAMP

(a) Remove the 2 bolts and 2 wire harness clamps.

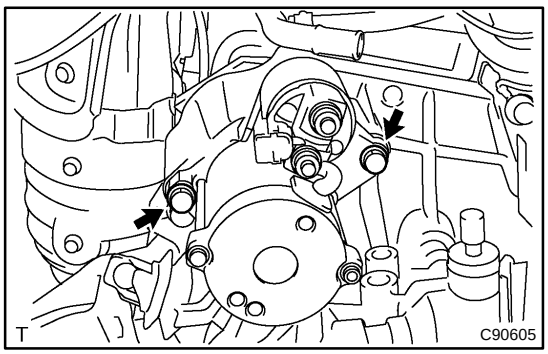

7. REMOVE STARTER ASSY

(a) Remove the 2 bolts and starter assy.

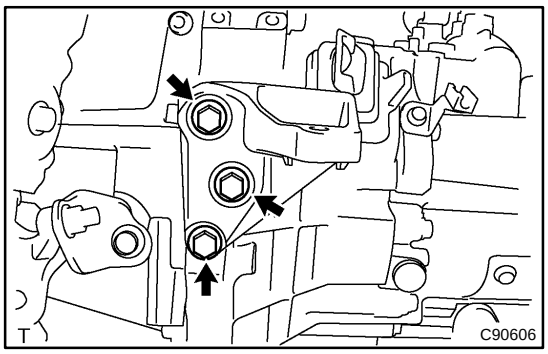

8. REMOVE TRANSVERSE ENGINE ENGINE MOUNTING BRACKET

(a) Remove the 3 bolts and engine mounting bracket.

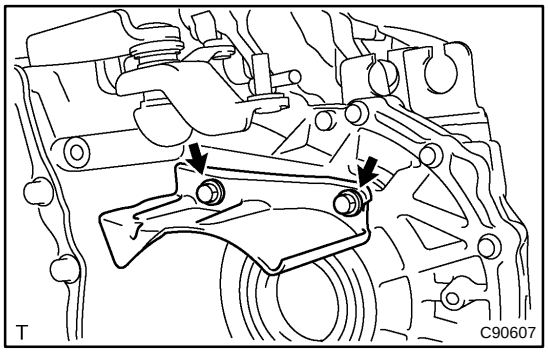

9. REMOVE MANUAL TRANSMISSION CASE PROTECTOR

(a) Remove the 2 bolts and manual transmission case protector.

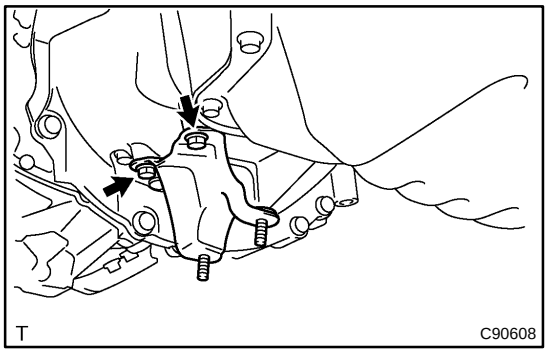

10. REMOVE EXHAUST PIPE SUPPORT BRACKET NO.1

(a) Remove the 2 bolts and exhaust pipe support bracket No.1.

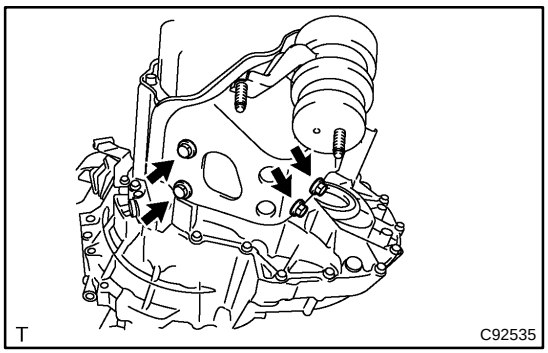

11. REMOVE TRANSVERSE ENGINE ENGINE MOUNTING INSULATOR

(a) Remove the 4 bolts and engine mounting insulator.

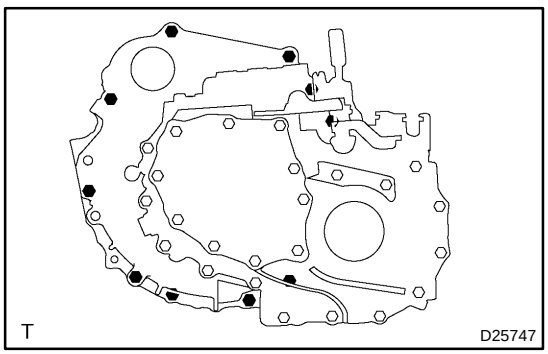

12. REMOVE MANUAL TRANSAXLE ASSY

(a) Remove the 10 bolts.
(b) Separate and remove the transaxle from the engine.

13. INSTALL MANUAL TRANSAXLE ASSY

(a) Align the input shaft with the clutch disc and install the transaxle to the engine.

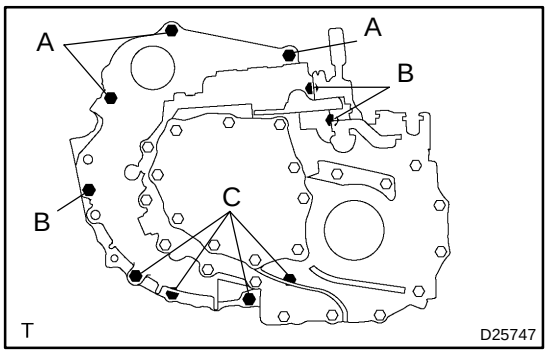

(b) Install the 10 bolts.
Torque:
Bolt A: 64 N·m (650 kgf·cm, 47 ft·lbf)
Bolt B: 46 N·m (470 kgf·cm, 34 ft·lbf)
Bolt C: 44 N·m (449 kgf·cm, 32 ft·lbf)

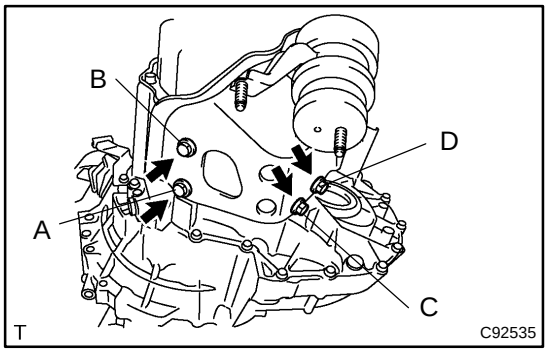

14. INSTALL TRANSVERSE ENGINE ENGINE MOUNTING INSULATOR

(a) Install the engine mounting insulator with the 4 bolts.
Torque: 64 N·m (653 kgf·cm, 47 ft·lbf)

HINT:
Tighten them in the order, A, B, C and D.

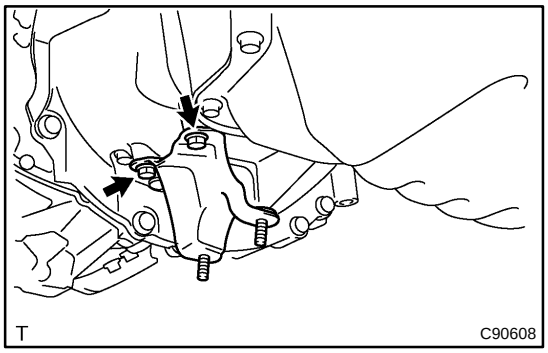

15. INSTALL EXHAUST PIPE SUPPORT BRACKET NO.1

(a) Install the exhaust pipe support bracket No.1 with the 2 bolts.
Torque: 8.0 N·m (82 kgf·cm, 71 in.·lbf)

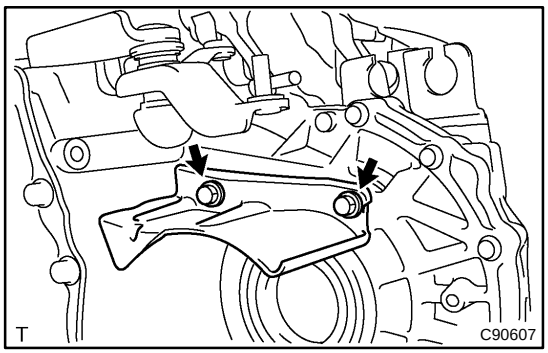

16. INSTALL MANUAL TRANSMISSION CASE PROTECTOR

(a) Install the manual transmission case protector with the 2 bolts.
Torque: 18 N·m (184 kgf·cm, 13 ft·lbf)

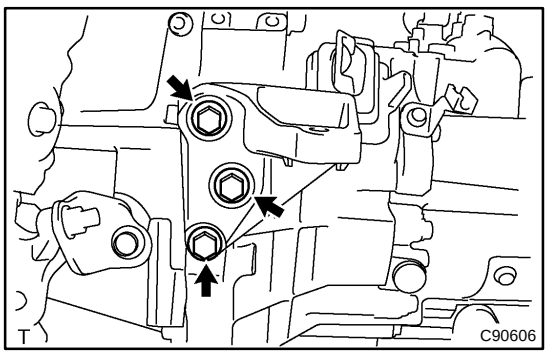

17. INSTALL TRANSVERSE ENGINE ENGINE MOUNTING BRACKET

(a) Install the engine mounting bracket with the 3 bolts.
Torque: 64 N·m (653 kgf·cm, 47 ft·lbf)

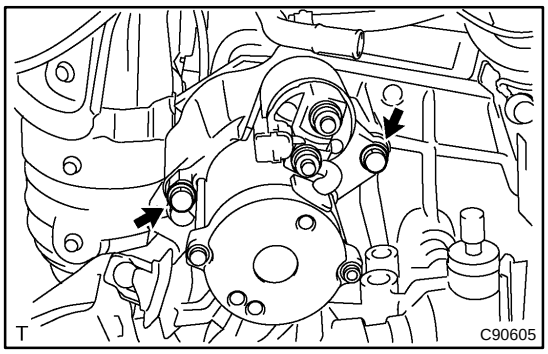

18. INSTALL STARTER ASSY

(a) Install the starter assy with the 2 bolts.
Torque: 37 N·m (377 kgf·cm, 27 ft·lbf)

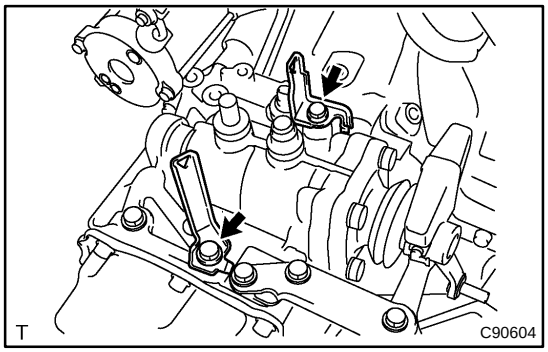

19. INSTALL WIRE HARNESS CLAMP

(a) Install the wire harness clamps with the 2 bolts.
Torque: 8.0 N·m (82 kgf·cm, 71 in.·lbf)

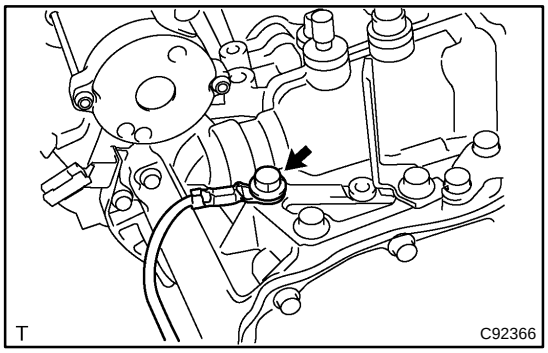

20. INSTALL ENGINE WIRE NO.3

(a) Install the engine wire No. 3 with the bolt.
Torque: 25.5 N·m (260 kgf·cm, 19 ft·lbf)

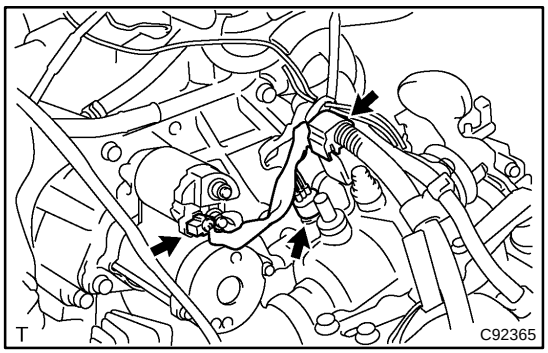

21. CONNECT WIRE HARNESS

(a) Connect the wire harness clamp.
(b) Connect the back–up lamp switch connector and starter connector.

22. INSTALL FRONT DRIVE SHAFT ASSY LH
(See page 30–8)
23. INSTALL FRONT DRIVE SHAFT ASSY RH
(See page 30–8)
24. INSTALL ENGINE ASSEMBLY WITH TRANSAXLE(See page 14–22)

MANUAL TRANSAXLE ASSY (E351)

41053–01

OVERHAUL

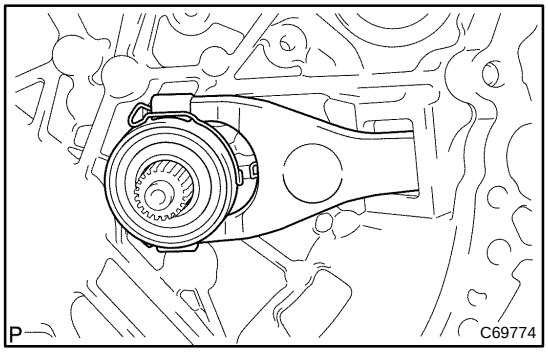

1. REMOVE CLUTCH RELEASE FORK SUB–ASSY

(a) Remove the clutch release fork with clutch release bearing from the manual transaxle case.

2. REMOVE CLUTCH RELEASE BEARING ASSY

(a) Remove the clutch release bearing assy and clutch release bearing hub clip from the clutch release fork sub–assy.

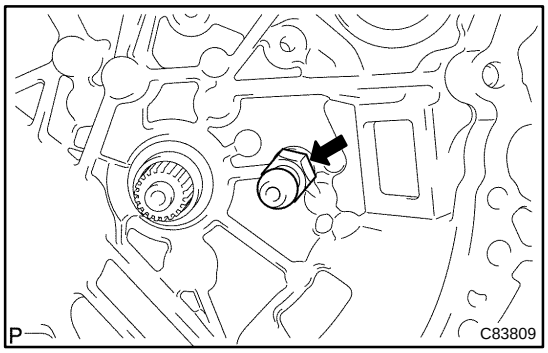

3. REMOVE RELEASE FORK SUPPORT

(a) Remove the release fork support from the manual transaxle case.

4. REMOVE CLUTCH RELEASE FORK BOOT

(a) Remove the clutch release fork boot from the manual transaxle case.

5. REMOVE SPEEDOMETER DRIVEN HOLE COVER SUB–ASSY

(a) Remove the bolt and speedometer driven hole cover.

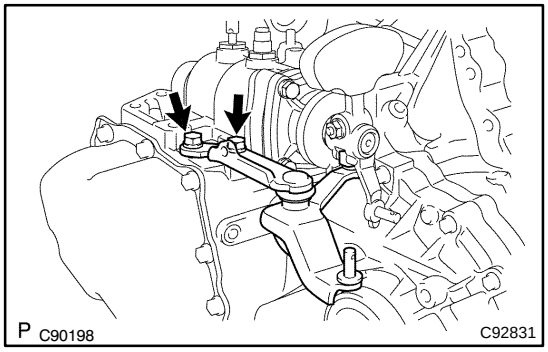

6. REMOVE SELECTING BELL CRANK ASSY

(a) Remove the 2 bolts and selecting bell crank assy from manual transmission case.

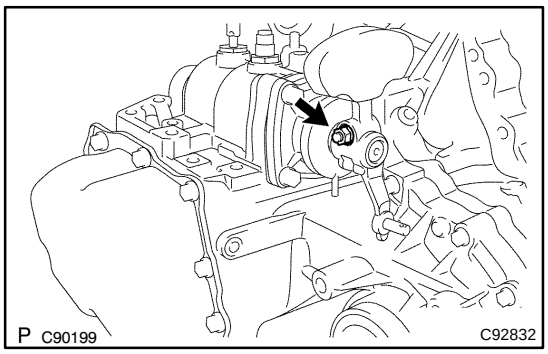

7. REMOVE CONTROL SHIFT LEVER

(a) Remove the nut and spring washer.

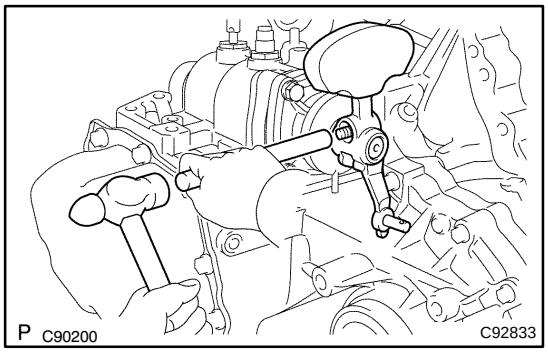

(b) Using a brass bar and hammer, remove the shift outer lock pin.
(c) Remove the control shift lever.

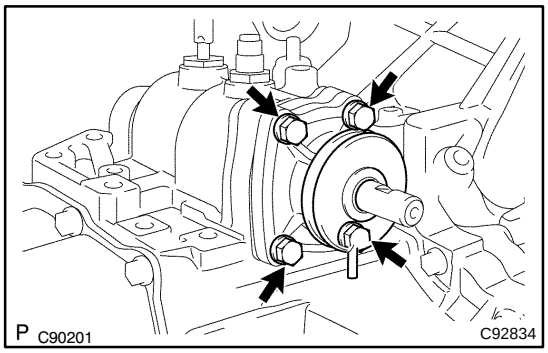

8. REMOVE CONTROL SHAFT COVER

(a) Remove the 4 bolts and control shaft cover from the manual transmission case.

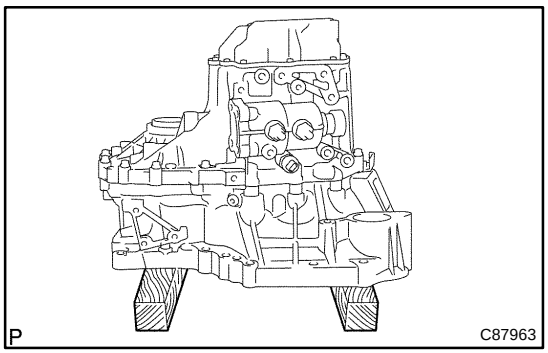

9. FIX MANUAL TRANSAXLE ASSY

(a) Using wooden blocks, fix the manual transaxle assy.

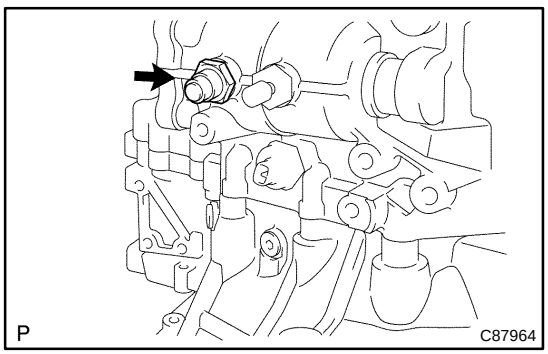

10. REMOVE LOCK BALL ASSY NO.1

(a) Remove the lock ball assy No.1 from the manual transmission case.

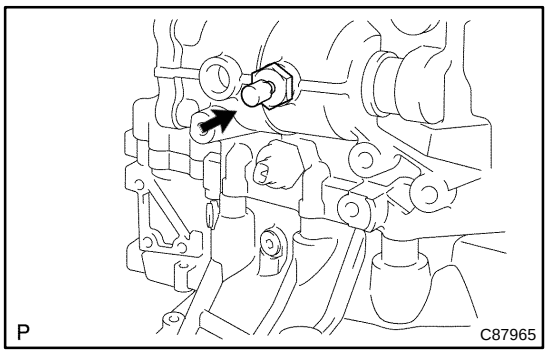

11. REMOVE MANUAL TRANSMISSION BREATHER PLUG

(a) Remove the manual transmission breather plug and gasket.

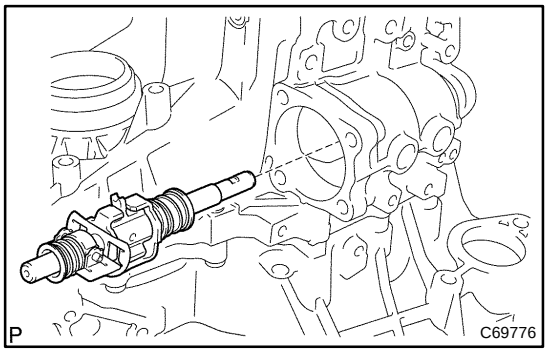

12. REMOVE SHIFT & SELECT LEVER SHAFT ASSY

(a) Remove the shift & select lever shaft assy from the manual transmission case.

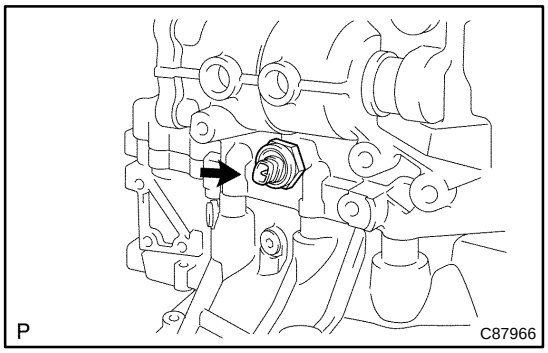

13. REMOVE BACK UP LAMP SWITCH ASSY

(a) Remove the back up lamp switch assy and gasket from the manual transmission case.

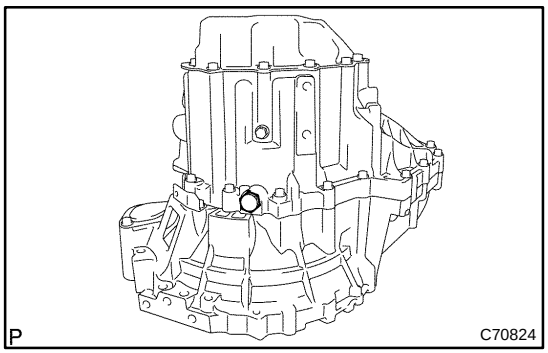

14. REMOVE MANUAL TRANSMISSION FILLER PLUG

(a) Remove the manual transmission filler plug and gasket from the manual transmission case.

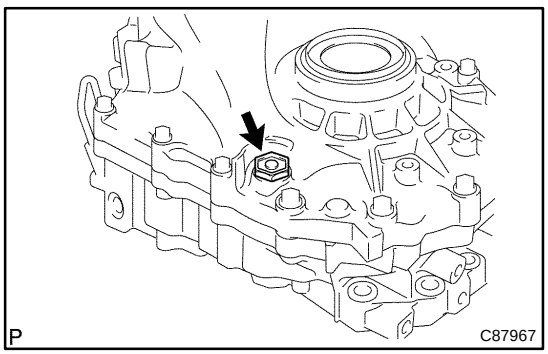

15. REMOVE DRAIN (MTM) PLUG SUB–ASSY

(a) Remove the drain (MTM) plug sub–assy and gasket from the manual transmission case.

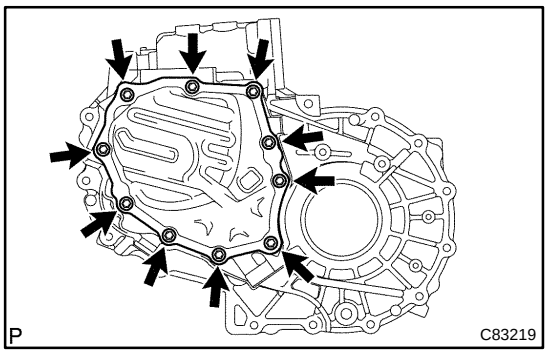

16. REMOVE MANUAL TRANSMISSION CASE COVER SUB–ASSY

(a) Remove the 10 bolts and manual transmission case cover from the manual transmission case.

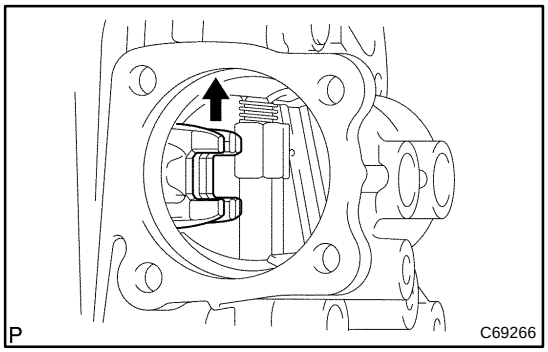

17. REMOVE MANUAL TRANSMISSION OUTPUT SHAFT REAR SET NUT

(a) Engage the gear to the double meshing.

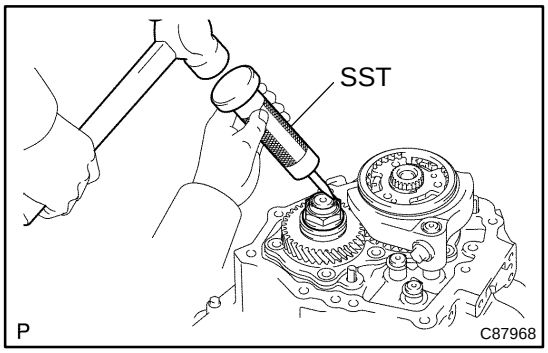

(b) Using SST and a hammer, loosen the staked part of the manual transmission output shaft rear set nut.
SST 09930–00010

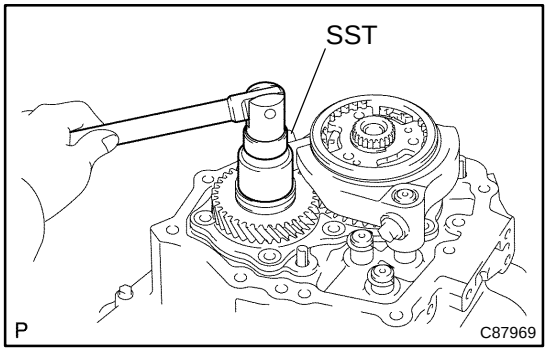

(c) Using SST, remove the manual transmission output shaft rear set nut from the output shaft.
SST 09229–55010

(d) Disengage the double meshing of the gear.

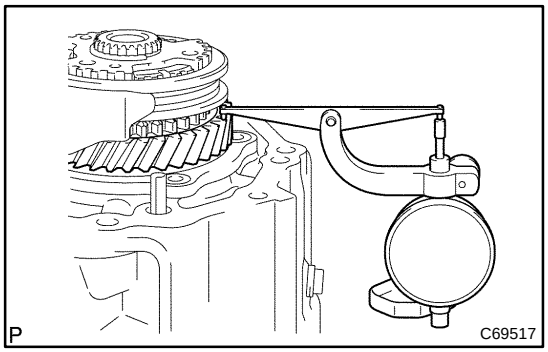

18. INSPECT 5TH GEAR THRUST CLEARANCE

(a) Using a dial indicator, inspect the 5th gear thrust clearance.
Standard clearance:
0.10 – 0.65 mm (0.0039 – 0.0256 in.)

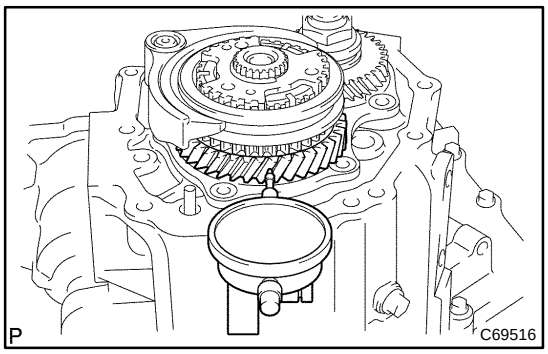

19. INSPECT 5TH GEAR RADIAL CLEARANCE

(a) Using a dial indicator, inspect the 5th gear radial clearance.

Standard clearance:
0.009 – 0.050 mm (0.0004 – 0.0020 in.)

HINT:
If the clearance is out of the specification, replace 1st gear needle roller bearing.

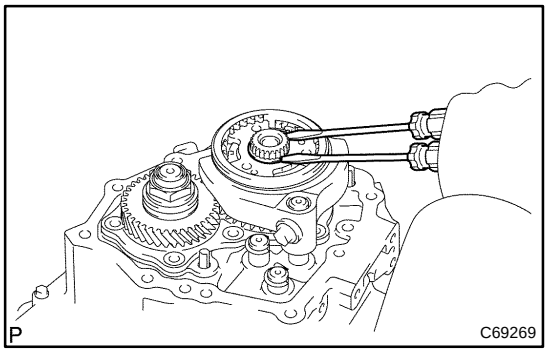

20. REMOVE TRANSMISSION CLUTCH HUB NO.3

(a) Using 2 screwdrivers and hammer, remove the transmission clutch hub No.3 shaft snap ring from the input shaft.

HINT:
Using a waste to prevent the snap ring from being scattered.

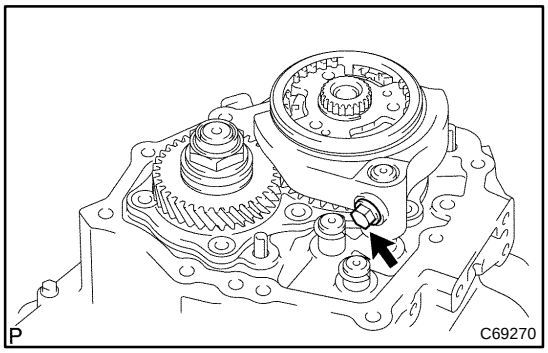

(b) Remove the gear shift fork bolt from the gear shift fork No.3.

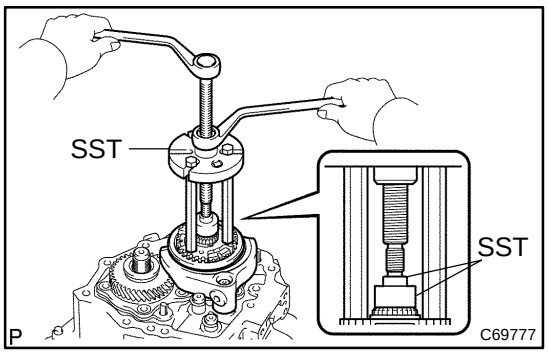

(c) Using SST, remove the transmission clutch hub No.3 and gear shift fork No.3 from the input shaft.

SST 09950–30012 (09951–03010, 09953–03010, 09954–03010), 09950–50013 (09957–04010), 09950–60010 (09951–00280)

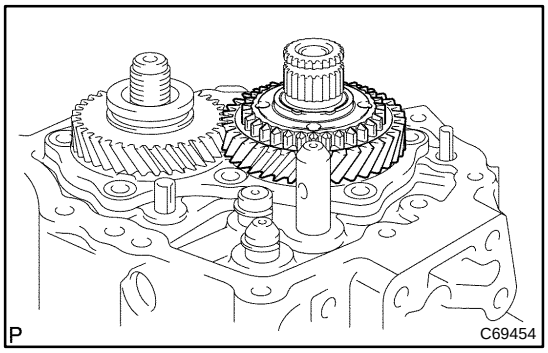

21. REMOVE 5TH GEAR

(a) Remove the 5th gear from the input shaft.

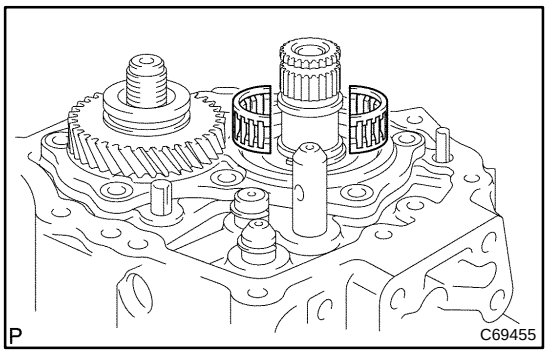

22. REMOVE 5TH GEAR NEEDLE ROLLER BEARING

(a) Remove the 5th gear needle roller bearing from the input Shaft.

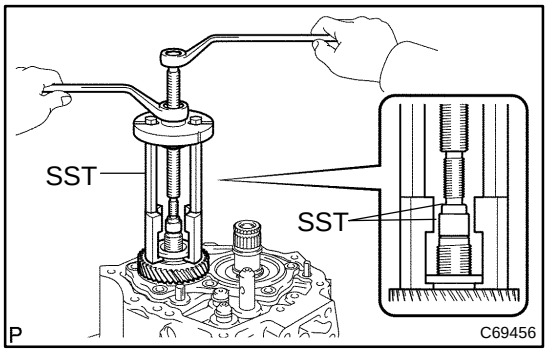

23. REMOVE 5TH DRIVEN GEAR

(a) Using SST, remove the 5th driven gear from the output shaft.

SST 09950–30012 (09951–03010, 09953–03010, 09954–03010, 09957–04010), 09950–60010 (09951–00180, 09955–03011), 09950–50013

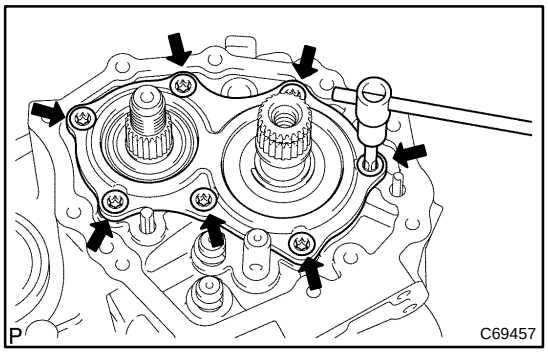

24. REMOVE BEARING RETAINER REAR (MTM)

(a) Using a torx socket wrench (T45), remove the 7 torx screws and bearing retainer rear (MTM) from the manual transmission case.

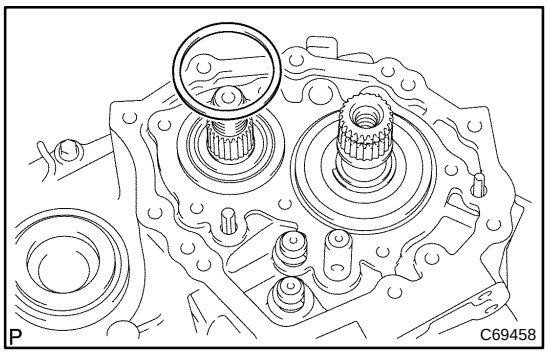

25. REMOVE OUTPUT SHAFT REAR BEARING SHIM

(a) Remove the output shaft rear bearing shim from the output shaft.

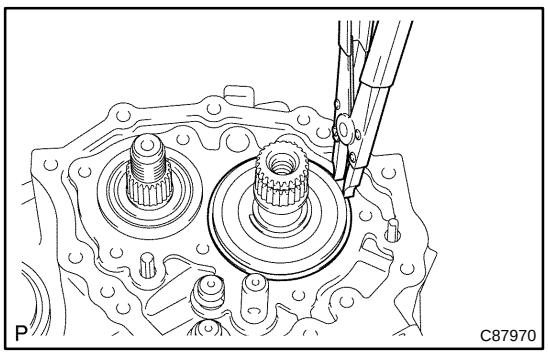

26. REMOVE INPUT SHAFT REAR BEARING SHAFT SNAP RING

(a) Using a snap ring expander, remove the input shaft rear bearing shaft snap ring from the input shaft.

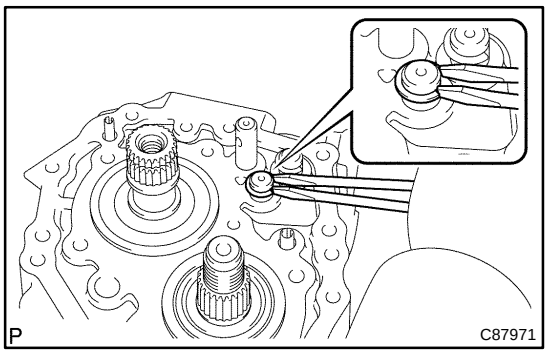

27. REMOVE SHIFT FORK SHAFT SHAFT SNAP RING

(a) Using 2 screwdrivers and a hammer, remove the shift fork shaft shaft snap ring from the gear shift fork shaft No.1.

HINT:
Using a waste to prevent the snap ring from being scattered.

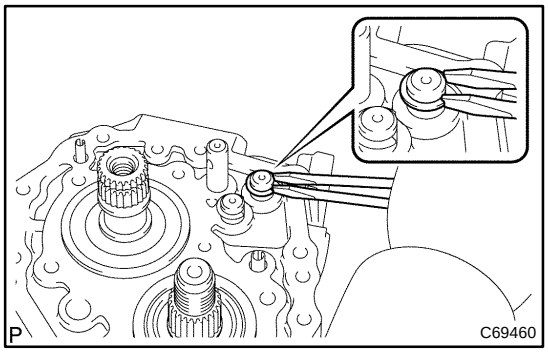

(b) Using 2 screw drivers and a hammer, remove the shift fork shaft shaft snap ring from the gear shift fork shaft No.2.

HINT:
Using a waste to prevent the snap ring from being scattered.

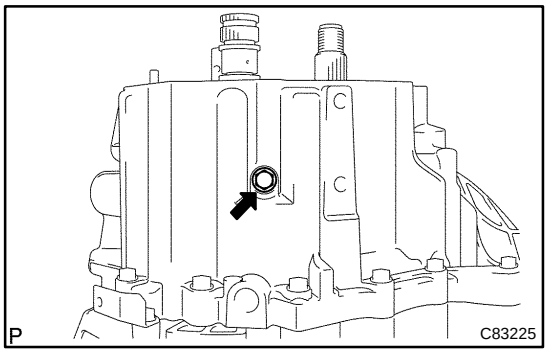

28. REMOVE REVERSE IDLER GEAR SHAFT BOLT

(a) Remove the reverse idler gear shaft bolt and gasket.

29. REMOVE CLUTCH TUBE BRACKET NO.1

(a) Remove the 3 bolts and remove the clutch tube bracket.

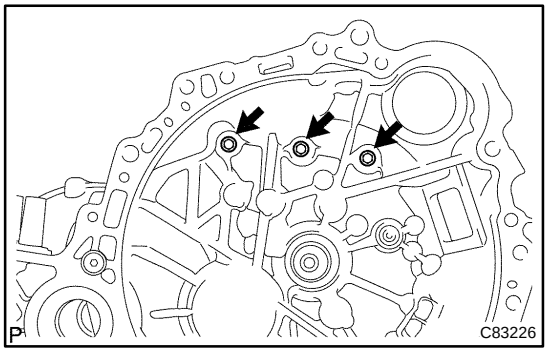

30. REMOVE MANUAL TRANSMISSION CASE

(a) Remove the 3 bolts of the manual transaxle case side.

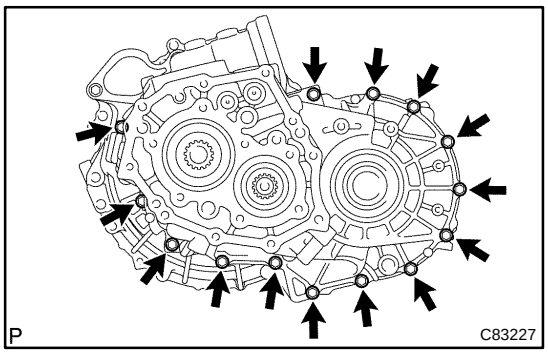

(b) Remove the 14 bolts of the manual transmission case side.

(c) Using a plastic hammer, remove the manual transmission case.

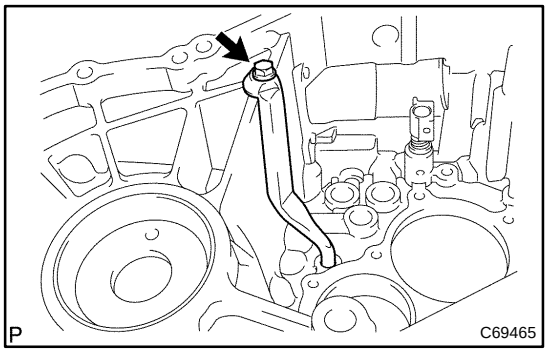

31. REMOVE OIL RECEIVER PIPE NO.2 (MTM)

(a) Remove the bolt and oil receiver pipe No.2 (MTM) from the manual transmission case.

NOTICE:
Do not damage the pipe.

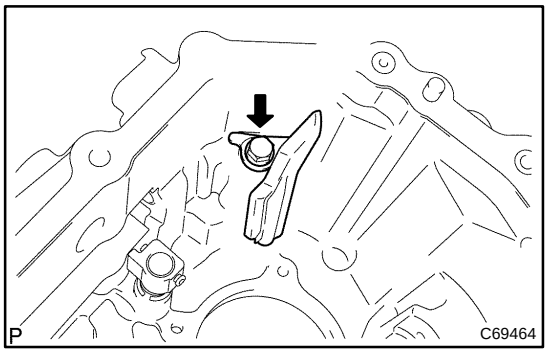

32. REMOVE OIL RECEIVER PIPE NO.1 (MTM)

(a) Remove the bolt and oil receiver pipe No.1 (MTM) from the manual transmission case.

NOTICE:
Do not damage the pipe.

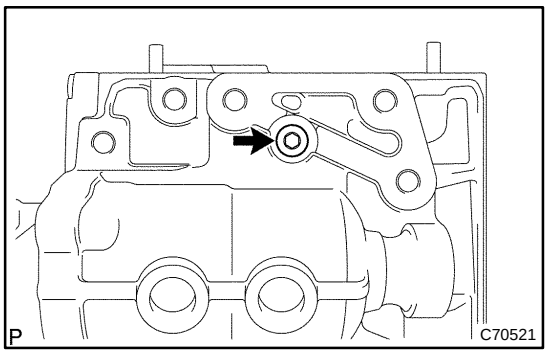

33. REMOVE REVERSE RESTRICT PIN ASSY

(a) Using a hexagon wrench (6 mm), remove the reverse restrict pin plug from the manual transmission case.

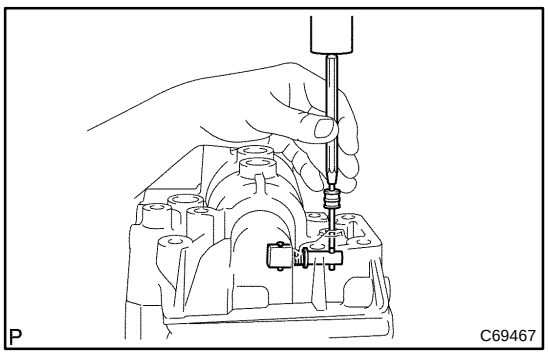

(b) Using a pin punch (ϕ 5 mm), remove the slotted pin and reverse restrict pin assy.

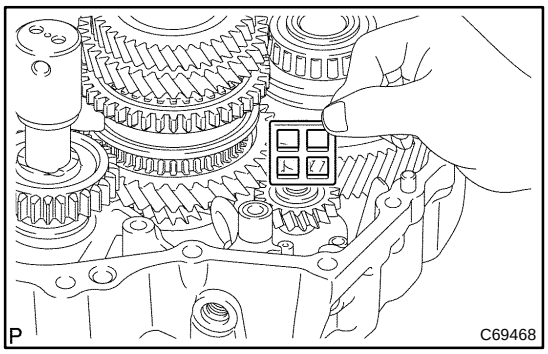

34. REMOVE TRANSMISSION MAGNET

(a) Remove the transmission magnet from the manual transaxle case.

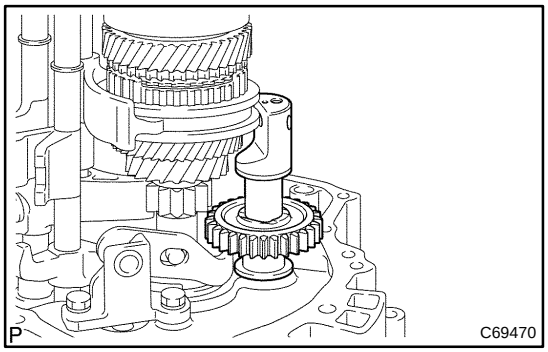

35. REMOVE REVERSE IDLER GEAR SUB–ASSY

(a) Remove the reverse idler gear sub–assy from the manual transaxle case.

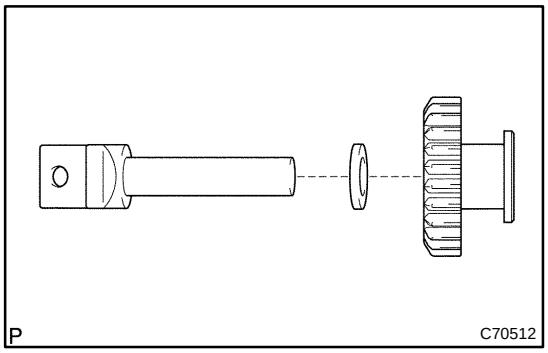

(b) Remove the reverse gear and reverse idler thrust washer from the reverse idler gear shaft.

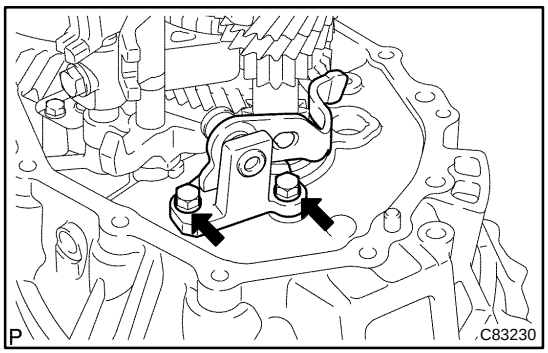

36. REMOVE REVERSE SHIFT ARM BRACKET ASSY

(a) Remove the 2 bolts and reverse shift arm bracket from the manual transaxle case.

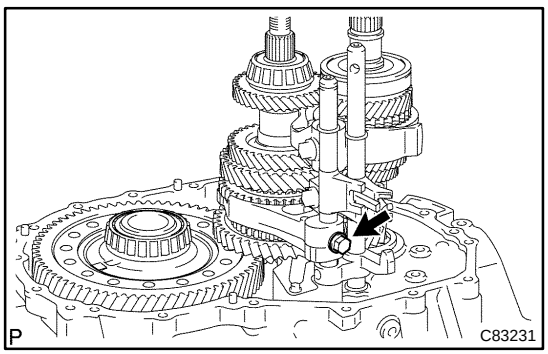

37. REMOVE GEAR SHIFT FORK SHAFT NO.1

(a) Remove the shift fork bolt from the gear shift fork No.1.

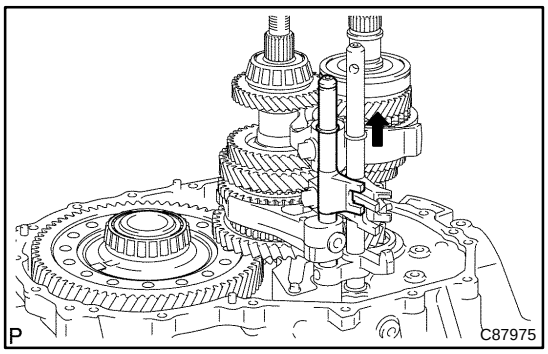

(b) Pull out the gear shift fork shaft No.1 while the gear fork shaft No.3 is pulled up.

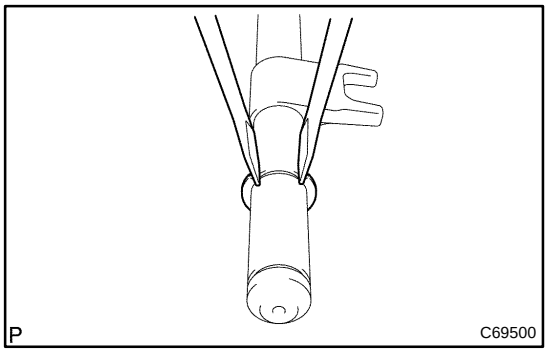

(c) Using 2 screwdrivers and a hammer, remove the shift fork shaft snap ring from the gear shift fork shaft No.1.

NOTICE:
Using a waste to prevent the snap ring from being scattered.

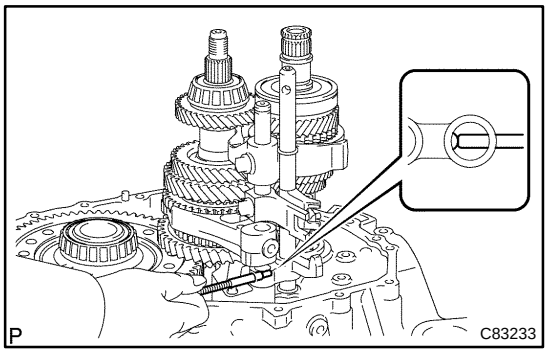

38. REMOVE REVERSE SHIFT FORK ROLLER

(a) Using a magnetic finger, remove the reverse shift fork roller from the reverse shift fork.

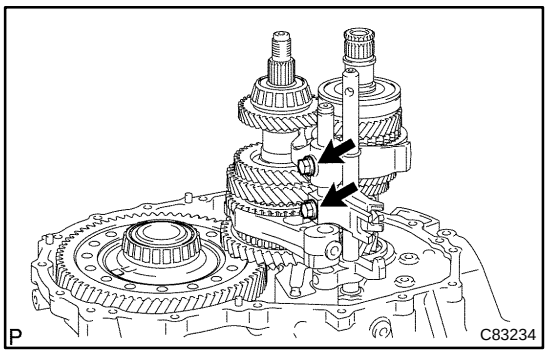

39. REMOVE GEAR SHIFT FORK SHAFT NO.2

(a) Remove the 2 shift fork bolts from the gear shift fork No.2 and gear shift head No.1.

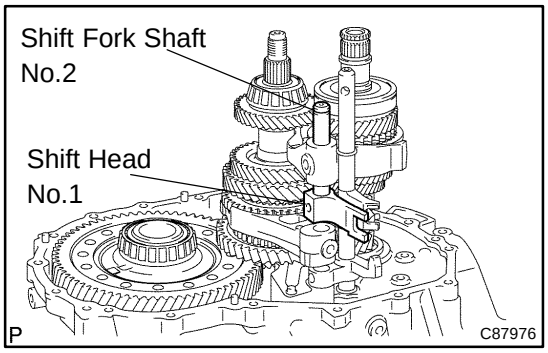

(b) Remove the gear shift fork shaft No.2 and gear shift head No.1 from the manual transaxle case.

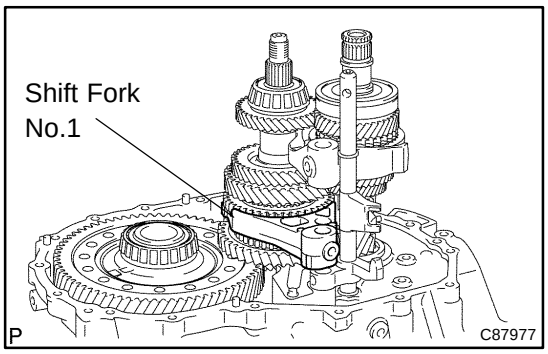

40. REMOVE GEAR SHIFT FORK NO.1

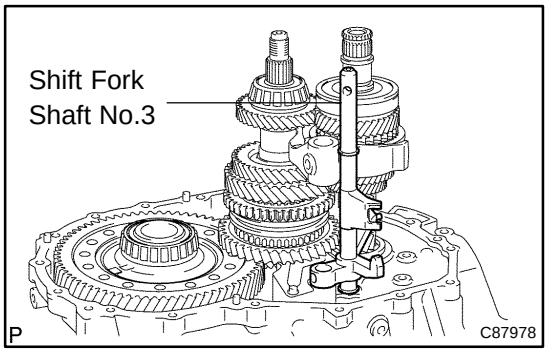

41. REMOVE GEAR SHIFT FORK SHAFT NO.3

(a) Remove the gear shift fork shaft No.3 from the manual transaxle case.

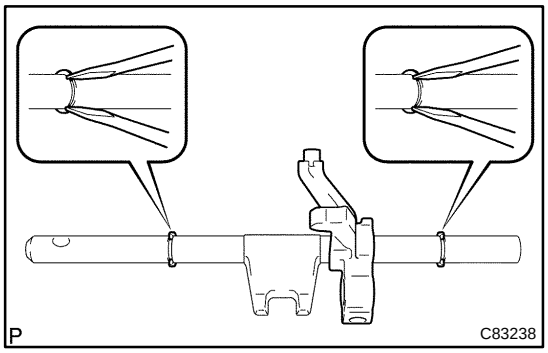

(b) Using 2 screwdriver and a hammer, remove the 2 shift fork shaft snap rings from the gear shift fork shaft No. 3.

(c) Remove the reverse shift fork from the gear shift fork shaft No.3.

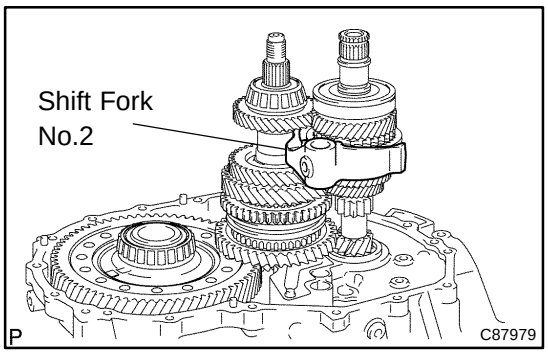

42. REMOVE GEAR SHIFT FORK NO.2

(a) Remove the gear shift fork No.2 from the input shaft assy.

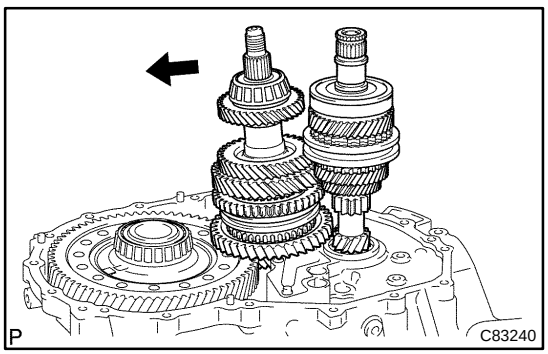

43. REMOVE INPUT SHAFT ASSY

(a) Incline the output shaft then remove the input shaft from the manual transaxle case.

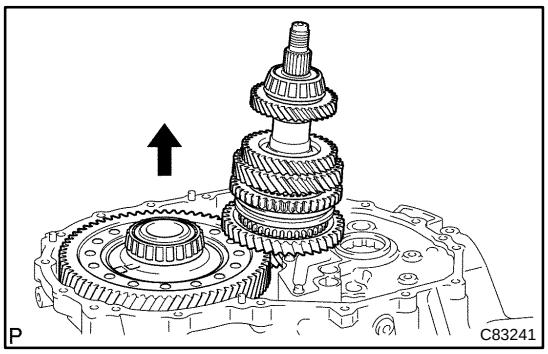

44. REMOVE OUTPUT SHAFT ASSY

(a) Remove the output shaft from the manual transaxle case.

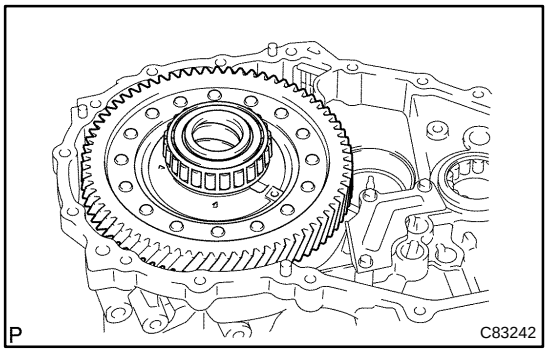

45. REMOVE DIFFERENTIAL CASE ASSY

(a) Remove the differential case assy from the manual transaxle case.

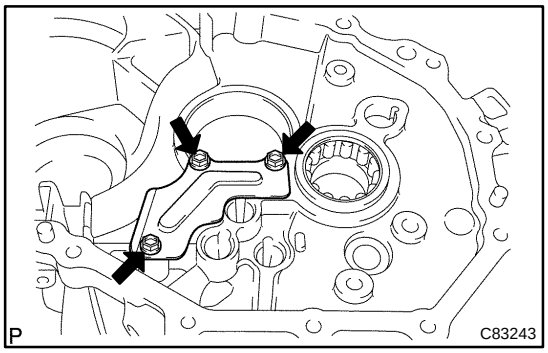

46. REMOVE MANUAL TRANSAXLE CASE RECEIVER

(a) Remove the 3 bolts and manual transaxle case receiver from the manual transaxle case.

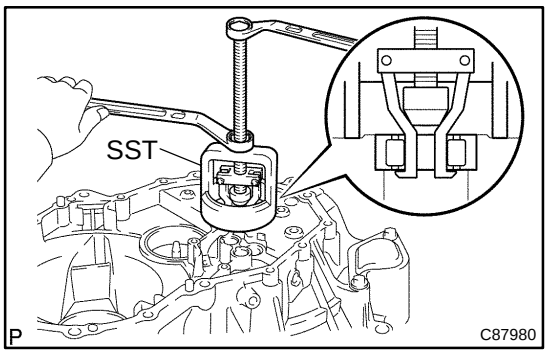

47. REMOVE INPUT SHAFT FRONT BEARING

(a) Using SST, remove the input shaft front bearing (outer race) from the manual transaxle case.
SST 09612–65014 (09612–01040, 09612–01050)

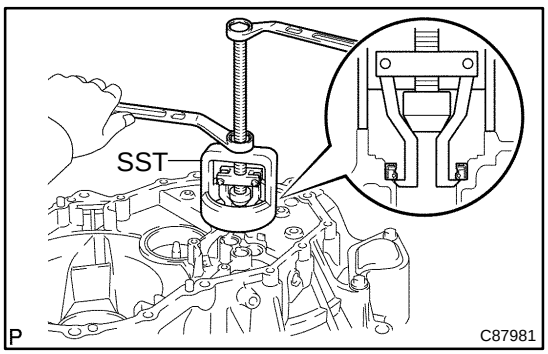

48. REMOVE FRONT TRANSAXLE CASE OIL SEAL

(a) Using SST, remove the manual transaxle case oil seal from the manual transaxle case.
SST 09612–65014 (09612–01040, 09612–01050)

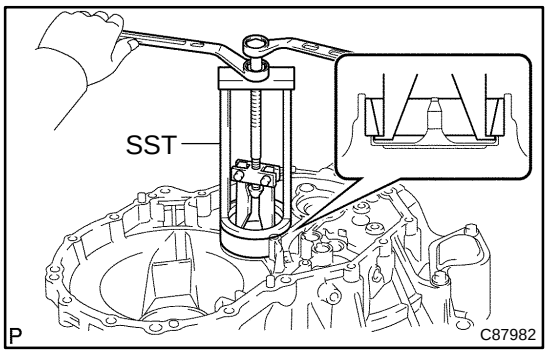

49. REMOVE OUTPUT SHAFT FRONT BEARING

(a) Using SST, remove the output shaft front bearing (outer race) from the manual transaxle case.
SST 09387–00041 (09387–02020, 09387–02010)

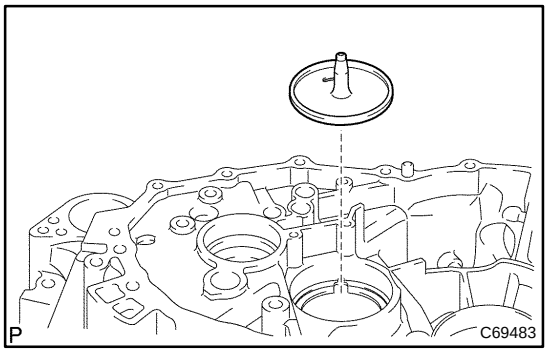

50. REMOVE OUTPUT SHAFT (MTM) COVER

(a) Remove the output shaft (MTM) cover from the manual transaxle case.

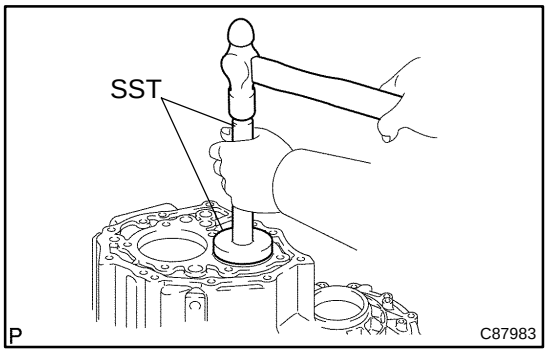

51. REMOVE OUTPUT SHAFT REAR BEARING

(a) Using SST, remove the output shaft rear bearing from the manual transmission case (outer race).
SST 09950–60010 (09951–00680), 09950–70010 (09951–07100)

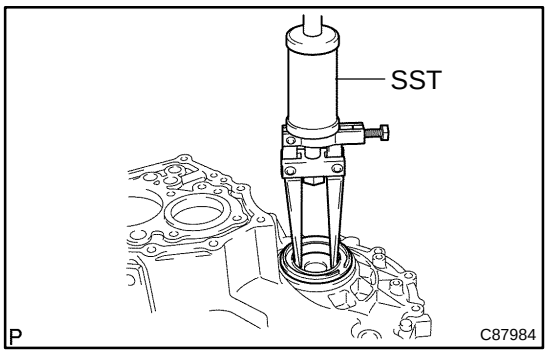

52. REMOVE TRANSMISSION CASE OIL SEAL

(a) Using SST, remove the transmission case oil seal from the manual transmission case.
SST 09308–00010

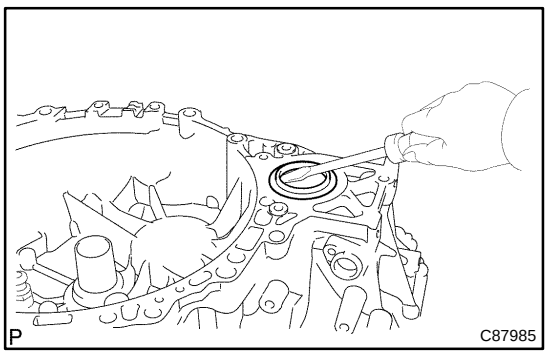

53. REMOVE FRONT TRANSAXLE CASE COVER OIL SEAL

(a) Using a screwdriver, remove the front transaxle case cover oil seal.

HINT:
Tape the screwdriver tip before use.

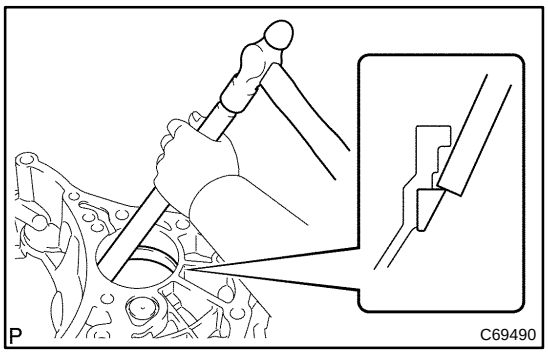

54. REMOVE FR DIFFERENTIAL CASE REAR TAPERED ROLLER BEARING

(a) Using a brass bar and a hammer, remove the FR differential case rear tapered roller bearing (outer race) from the manual transaxle case.

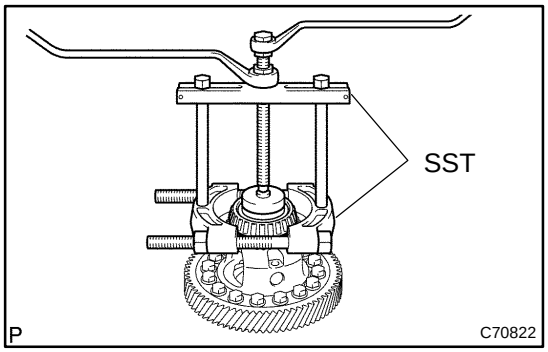

(b) Using SST, remove the front differential case rear tapered roller bearing from the front differential case.
SST 09950–00020, 09950–00030, 09950–40011 (09957–04010), 09950–60010 (09951–00560)

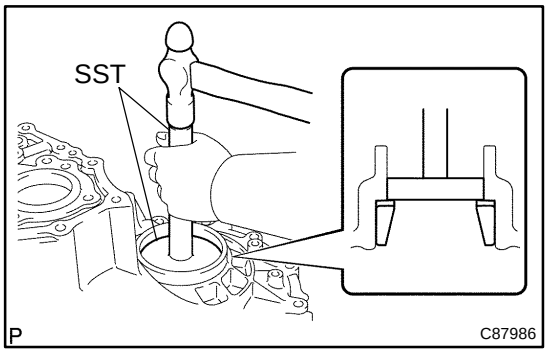

55. REMOVE FR DIFFERENTIAL CASE FRONT TAPERED ROLLER BEARING

(a) Using SST and hammer, remove the FR differential case front tapered roller bearing (outer race) and FR differential case rear shim from the manual transmission case.
SST 09950–60020 (09951–00790), 09950–70010 (09951–07100)

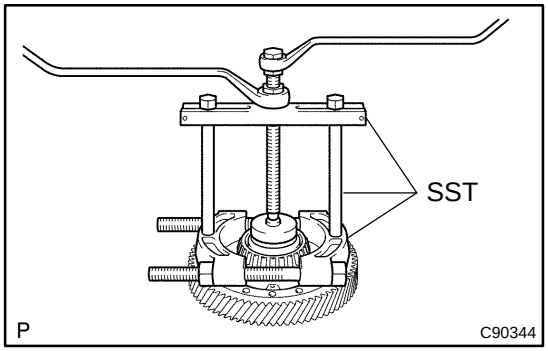

(b) Using SST, remove the FR differential case front tapered roller bearing (inner race) from front differential case.
SST 09950–00020, 09950–00030, 09950–40011 (09957–04010), 09950–60010 (09951–00490)

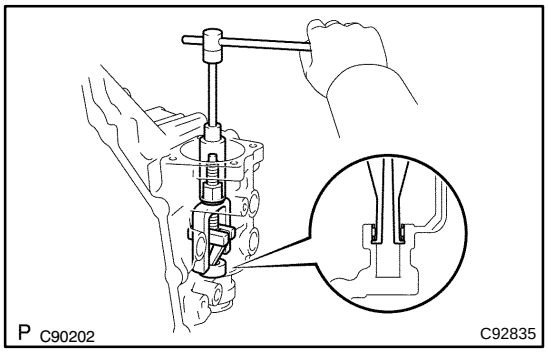

56. REMOVE CONTROL SHAFT COVER BIMETAL FORMED BUSH

(a) Using SST, remove the shift & select lever shaft bimetal formed bush.
SST 09319–60020

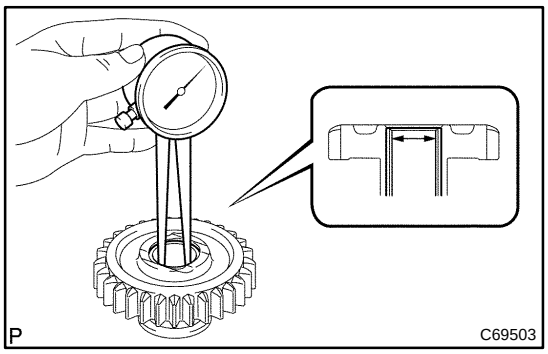

57. INSPECT REVERSE IDLER GEAR SUB–ASSY

(a) Using a callipers gauge, measure the inside diameter of the reverse idler gear.

Inside diameter: mm (in.)

Standard inside diameter	Maximum inside diameter
20.056 – 20.074 (0.7896 – 0.7903)	20.074 (0.7903)

If the inside diameter is exceeds than the maximum, replace the reverse idler gear.

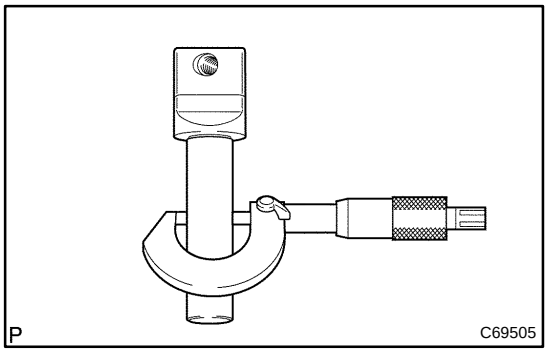

(b) Using a micro meter, measure the outer diameter of the reverse idler gear shaft.

Outer diameter: mm (in.)

Standard outer diameter	Minimum outer diameter
19.984 – 20.000 (0.7868 – 0.7874)	19.984 (0.7868)

If the outer diameter is less than the minimum, replace the reverse idler gear shaft.

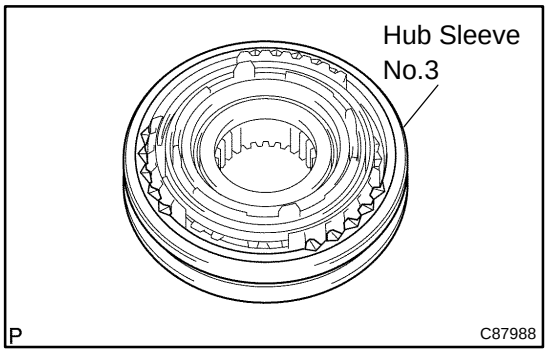

58. REMOVE TRANSMISSION HUB SLEEVE NO.3

(a) Remove the transmission hub sleeve No.3 from the transmission clutch hub No.3.

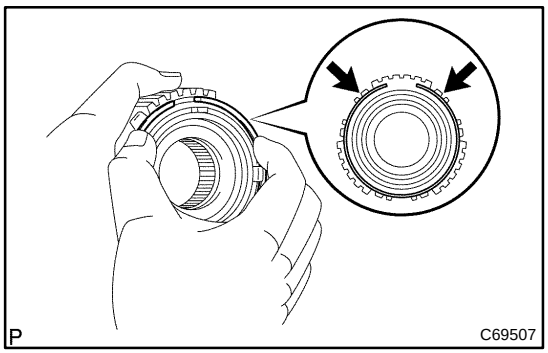

59. REMOVE SYNCHROMESH SHIFTING KEY SPRING NO.3

(a) Push the synchromesh shifting key spring No.3 then remove the 2 synchromesh shifting key spring No.3 from the transmission clutch hub No.3.

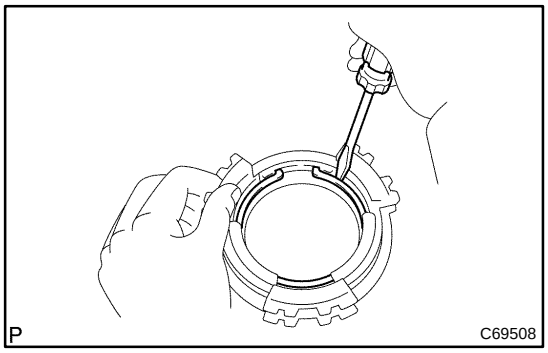

60. REMOVE SYNCHRONIZER PULL RING

(a) Using a screwdriver, remove the synchronizer pull ring snap ring.

(b) Remove the synchronizer pull ring, synchronizer outer ring No.5, synchronizer inner ring No.5 and synchronizer middle ring No.5 from the synchronizer ring No.5.

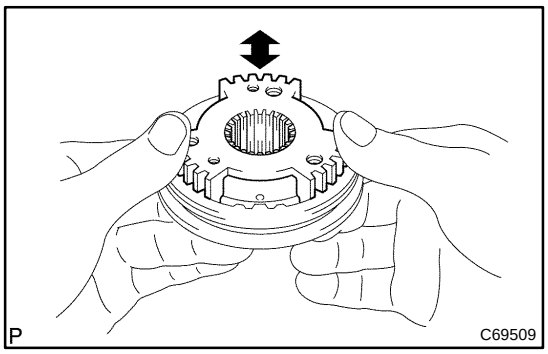

61. INSPECT TRANSMISSION CLUTCH HUB NO.3

(a) Inspect the sliding condition between transmission clutch hub No.3 and transmission hub sleeve No.3.

(b) Inspect tip of spline gear on the transmission hub sleeve No.3 for wear.

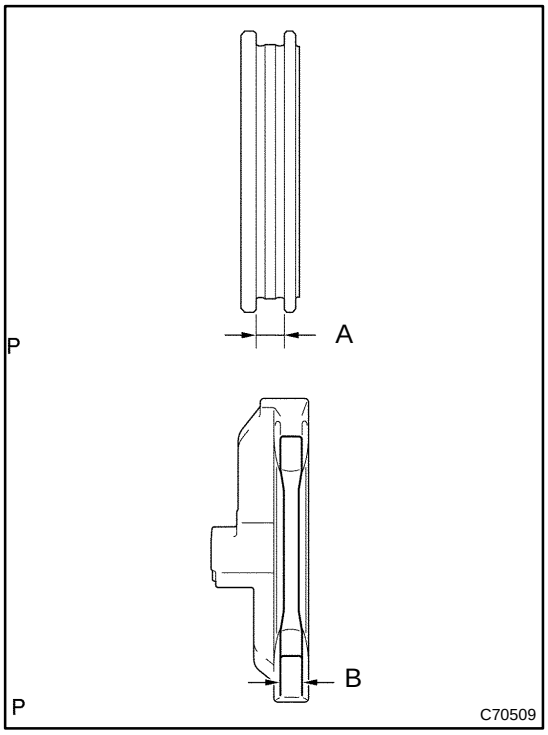

62. INSPECT TRANSMISSION HUB SLEEVE NO.3

(a) Using vernier calipers, measure the transmission hub sleeve No.3 groove and the thickness of the claw part on gear shift fork No.3, and calculate the clearance.

Standard clearance:

0.15 – 0.35 mm (0.0059 – 0.0138 in.) {A – B}

If the clearance is out of the specification, replace the transmission hub sleeve No.3 and gear shift fork No.3 with the new one.

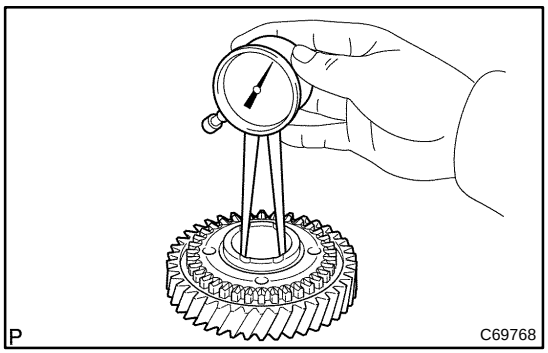

63. INSPECT 5TH GEAR

(a) Using a calipers gauge, measure the inside diameter of the 5th gear.

Inside diameter: mm (in.)

Standard inside diameter	Maximum inside diameter
34.981 – 34.997 (1.3772 – 1.3778)	34.997 (1.3778)

If the inner diameter is exceeds than the maximum, replace the 5th gear.

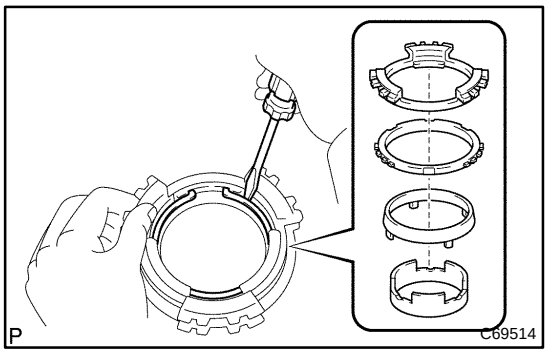

64. INSTALL SYNCHRONIZER PULL RING

(a) Install the synchronizer middle ring No.5, synchronizer ring outer No.5 and synchronizer pull ring to the synchronizer ring inner No.5. using a screwdriver, fix with snap ring.

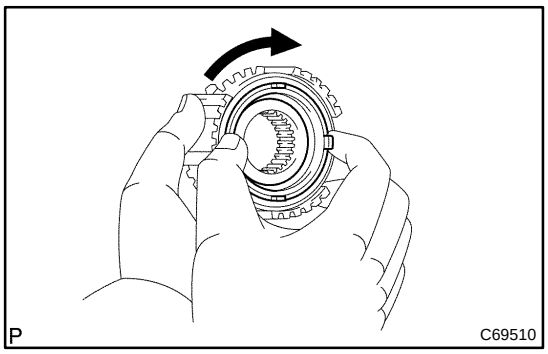

65. INSPECT SYNCHRONIZER RING MIDDLE NO.5

(a) Check that the synchronizer ring middle No.5 rotates smoothly.

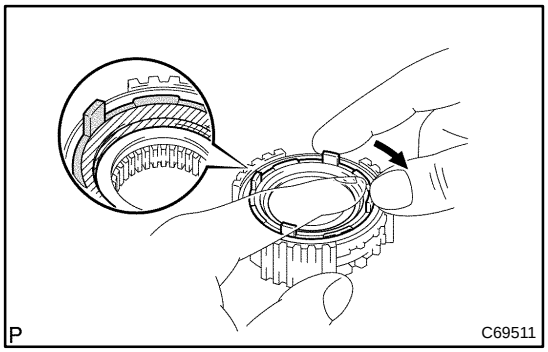

(b) Check that the synchronizer ring middle No.5 does not rotate while it is being pushed to the clutch hub No.3.

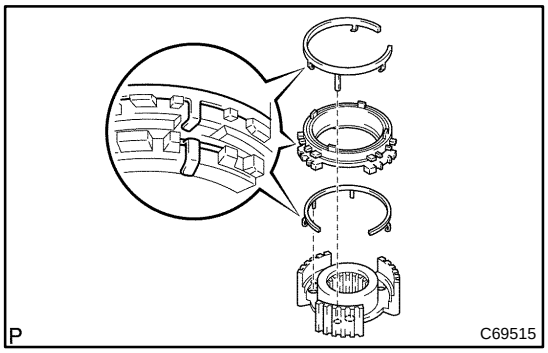

66. INSTALL SYNCHROMESH SHIFTING KEY SPRING NO.3

(a) Install the synchromesh shifting key spring No.3 to the transmission clutch hub No.3.

NOTICE:

Align the projection of the shifting key spring with the hole of the clutch hub No.3 and install them.

(b) Install the synchronizer ring set and synchromesh shifting key spring No.3 to the transmission clutch hub No.3.

NOTICE:

- **Engage the shifting key spring claw to the center of the teeth of the synchronizer ring.**
- **Align the projection of the shifting key spring with the hole of the clutch hub No.3 and install them.**

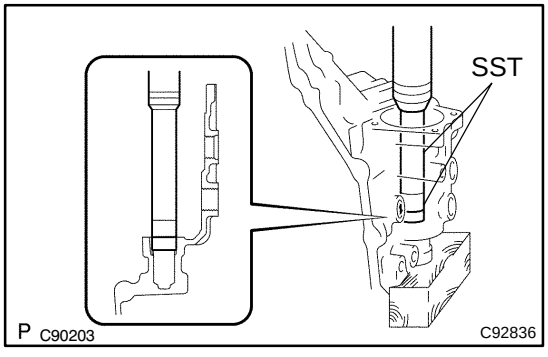

67. INSTALL CONTROL SHAFT COVER BIMETAL FORMED BUSH

(a) Using SST, install the shift & select lever shaft bimetal formed bush.

SST 09950–60010 (09951–00180), 09950–70010 (09951–07100)

Clearance:

0.081 – 0.149 mm (0.0032 – 0.0059 in.)

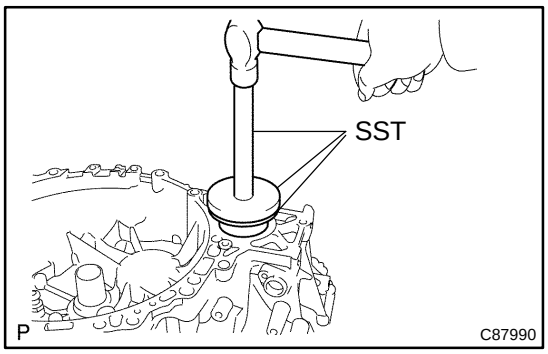

68. INSTALL FRONT TRANSAXLE CASE COVER OIL SEAL

(a) Using SST and a hammer, install the front transaxle case cover oil seal.
SST 09316–20011, 09950–60020 (09951–00910), 09950–70010 (09951–07150)
Oil seal driven in depth:
0 ± 0.5 mm (0 ± 0.020 in.)

(b) Coat the lip of front transaxle case cover oil seal with MP grease.

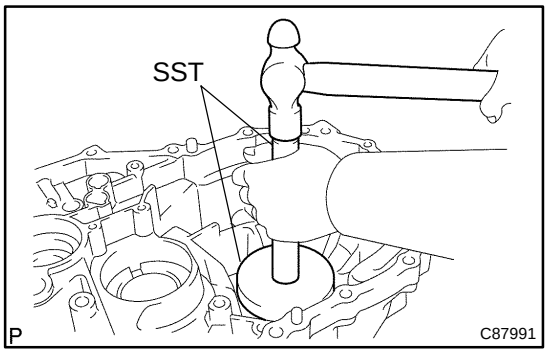

69. INSTALL FR DIFFERENTIAL CASE REAR TAPERED ROLLER BEARING

(a) Using SST and a hammer, install the FR differential case rear tapered roller bearing (outer race) to the front transaxle case.
SST 09950–60020 (09951–00910), 09950–70010 (09951–07100)

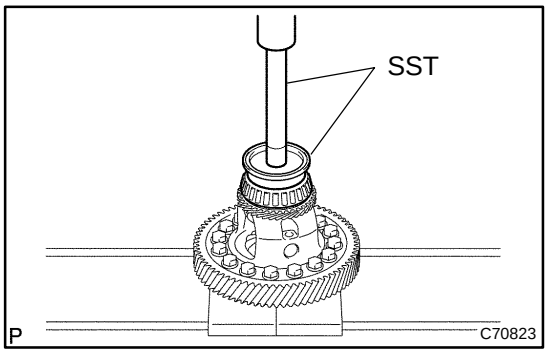

(b) Using SST and press, install the FR differential case rear tapered roller bearing (inner race) to the front differential case.
SST 09950–70010 (09951–07100, 09951–07150), 09608–10010

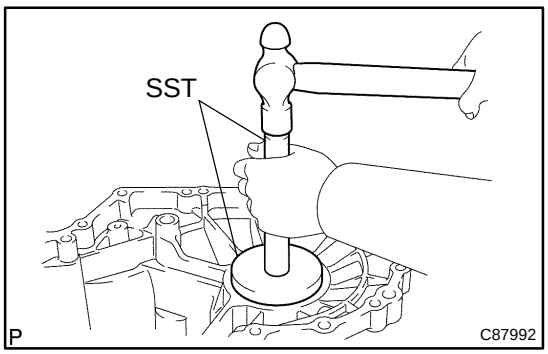

70. INSTALL FR DIFFERENTIAL CASE FRONT TAPERED ROLLER BEARING

(a) Install the front differential case shim rear.

(b) Using SST and a hammer, install FR differential case front tapered roller bearing (outer race).
SST 09950–60020 (09951–00890), 09950–70010 (09951–07100)

NOTICE:
Install the case shim as thick as the removed one.

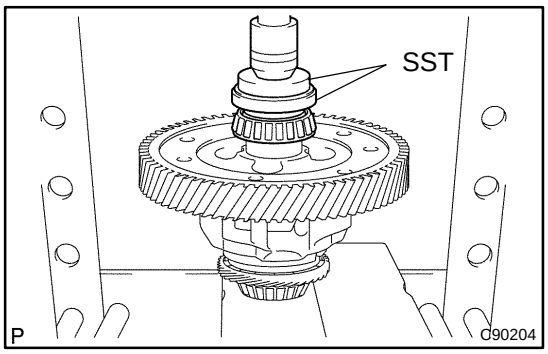

(c) Using SST, remove the FR differential case front tapered roller bearing (inner race)
SST 09631–12090, 09950–60010 (09951–00600), 09950–70010 (09951–07100)

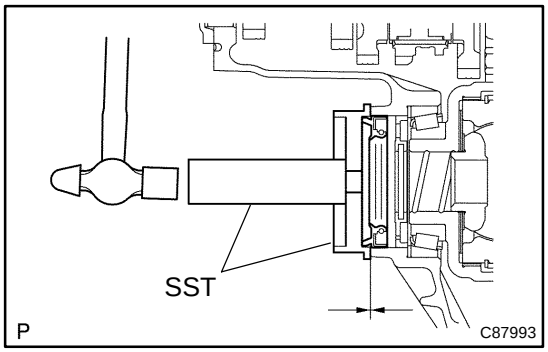

71. INSTALL TRANSMISSION CASE OIL SEAL

(a) Using SST and a hammer, install the transmission case oil seal to the manual transmission case.
SST 09608–32010, 09950–70010 (09951–07150)
Oil seal driven in depth:
3.5 ± 0.5 mm (0.138 ± 0.020 in.)

(b) Coat the lip of transmission case oil seal with MP grease.

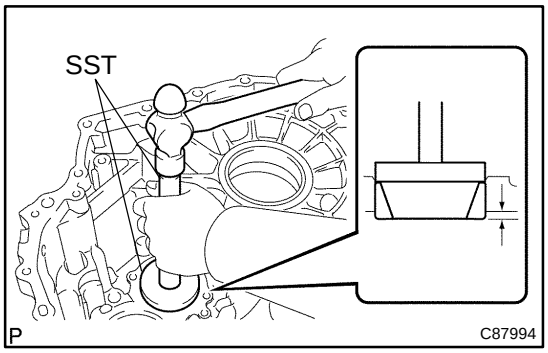

72. INSTALL OUTPUT SHAFT REAR BEARING

(a) Using SST and a hammer, install the output shaft rear bearing (outer race) to the manual transmission case.
SST 09950–60020 (09951–00680), 09950–70010 (09951–07100)
Clearance: 3.8 – 4.4 mm (0.150 – 0.173 in.)

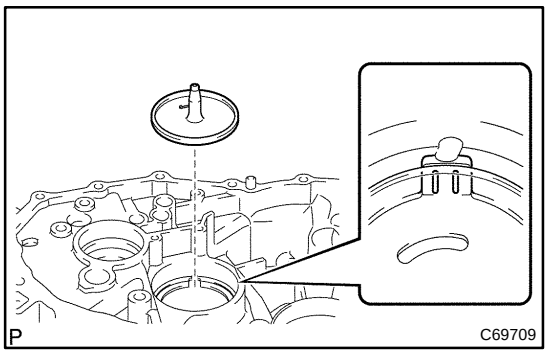

73. INSTALL OUTPUT SHAFT (MTM) COVER

(a) Coat the output shaft (MTM) cover with MP grease, install it to the manual transaxle case.

NOTICE:
Align the projection of the output shaft with the transmission grooves and install them.

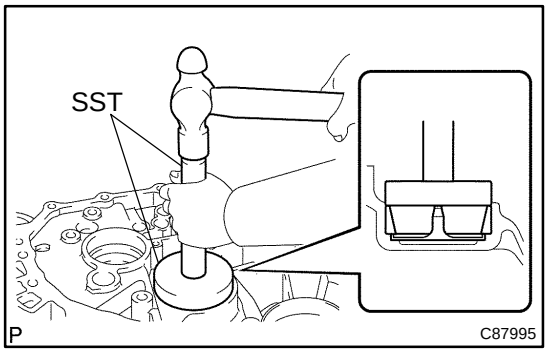

74. INSTALL OUTPUT SHAFT FRONT BEARING

(a) Using SST and a hammer, install the output shaft front bearing (outer race).
SST 09950–60020 (09951–00730), 09950–70010 (09951–07100)

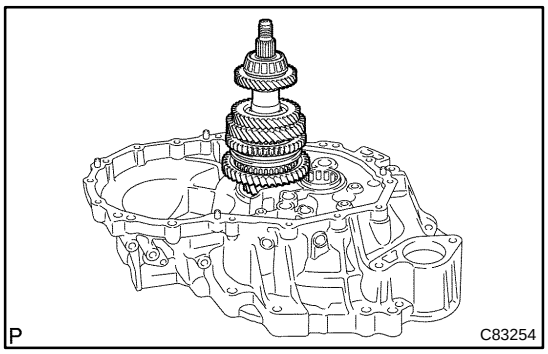

75. ADJUST OUTPUT SHAFT BEARING PRELOAD

(a) Install the output shaft to the manual transaxle case.

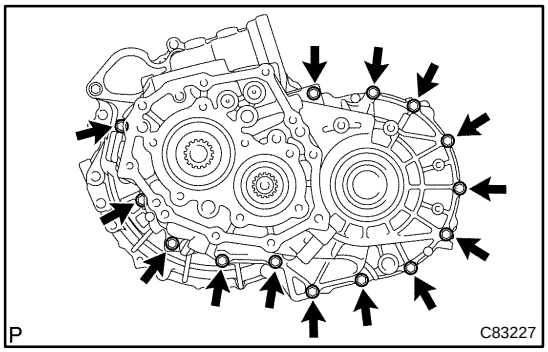

(b) Install the transmission case with 14 bolts to the manual transaxle case.
Torque: 29 N·m (296 kgf·cm, 21 ft·lbf)

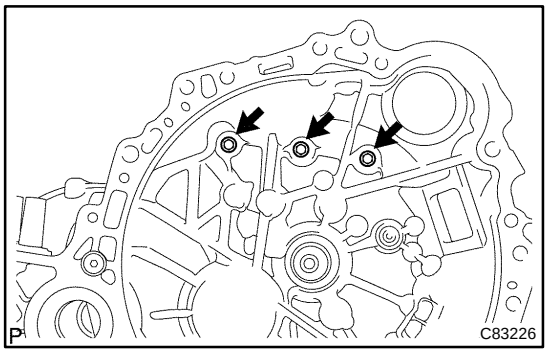

(c) Install the 3 bolts to the manual transaxle side.
Torque: 30 N·m (306 kgf·cm, 22 ft·lbf)

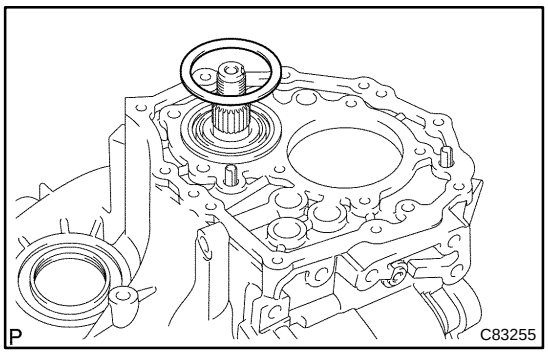

(d) Install the output shaft rear bearing shim to the output shaft.

HINT:
Install the same thickness of case shim as the removed one.

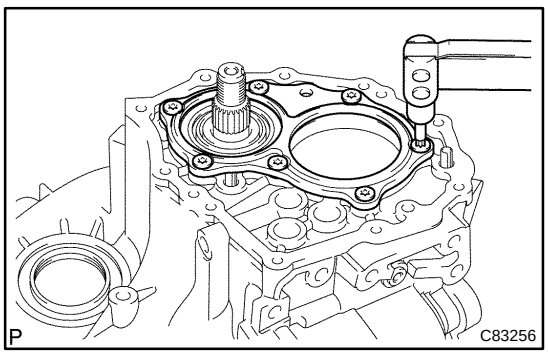

(e) Using a torx socket wrench (T45), install the bearing retainer RR with 7 screws to the manual transmission case.
Torque: 42 N·m (428 kgf·cm, 31 ft·lbf)

(f) Install the new output rear set nut to the output shaft.

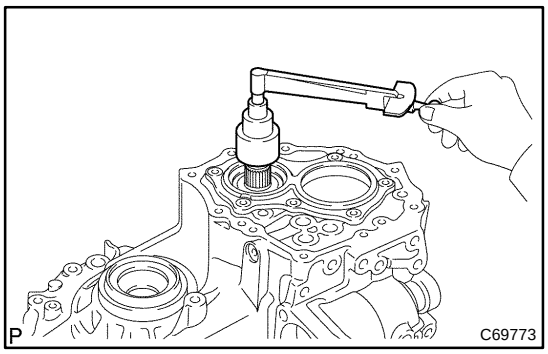

(g) Turn the output shaft in both directions to make it smooth.

(h) Using a socket wrench and torque wrench, inspect the preload.

Preload: N·m (kgf·cm, in.·lbf)

Bearing	Torque
New	0.8 – 1.6 (8.16 – 16.32, 7.1 – 14.2)
Used	0.5 – 1.0 (5.10 – 10.20, 4.4 – 8.9)

(i) If the preload is out of the specification, select the output shaft rear bearing shim and adjust it.

HINT:

The preload of the output shaft rear bearing shim varies in torque from about 0.04 to 0.06 N·m in one size.

Shim: mm (in.)

Part No.	thickness: mm (in.)	Make
90564–59001	1.30 (0.0512)	0
90564–59002	1.35 (0.0531)	1
90564–59003	1.40 (0.0551)	2
90564–59004	1.45 (0.0571)	3
90564–59005	1.50 (0.0591)	4
90564–59006	1.55 (0.0610)	5
90564–59007	1.60 (0.0630)	6
90564–59008	1.65 (0.0650)	7
90564–59009	1.70 (0.0669)	8
90564–59010	1.75 (0.0689)	9
90564–59011	1.80 (0.0709)	A
90564–59012	1.85 (0.0728)	B
90564–59013	1.90 (0.0748)	C
90564–59014	1.95 (0.0768)	D
90564–59015	2.00 (0.0787)	E
90564–59016	2.05 (0.0807)	F
90564–59017	2.10 (0.0827)	G
90564–59018	2.15 (0.0846)	H
90564–59019	2.20 (0.0866)	J
90564–59020	2.25 (0.0886)	K
90564–59021	2.30 (0.0906)	L
90564–59022	2.35 (0.0925)	M
90564–59023	2.40 (0.0945)	N
90564–59024	2.45 (0.0965)	P
90564–59025	2.50 (0.0984)	Q

(j) Remove the output shaft rear set nut from the output shaft.

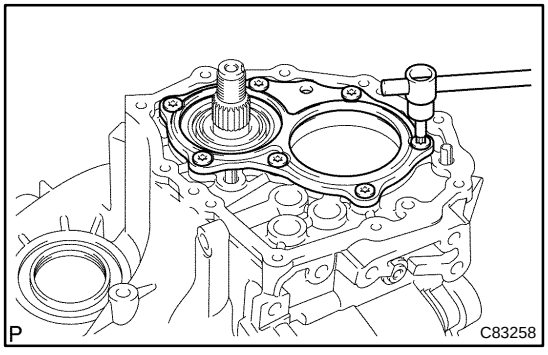

(k) Using a torx socket wrench (T45), remove the 7 screws and bearing retainer RR from the manual transmission case.

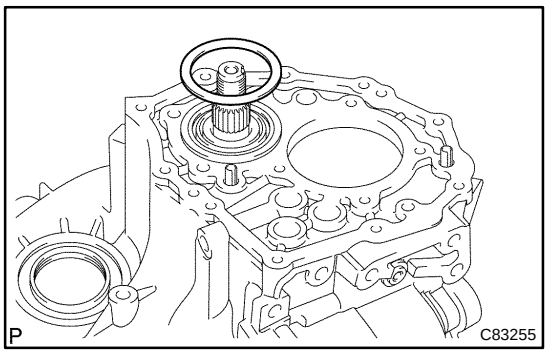

(l) Remove the output shaft rear bearing shim from the output shaft.

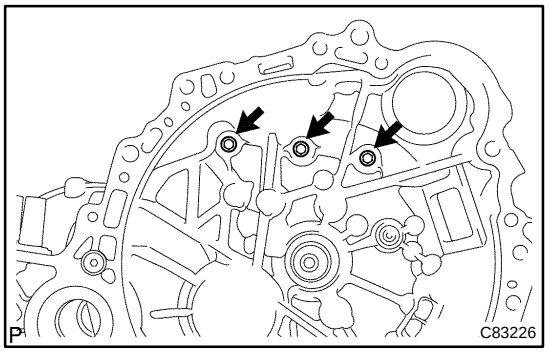

(m) Remove the 3 bolts.

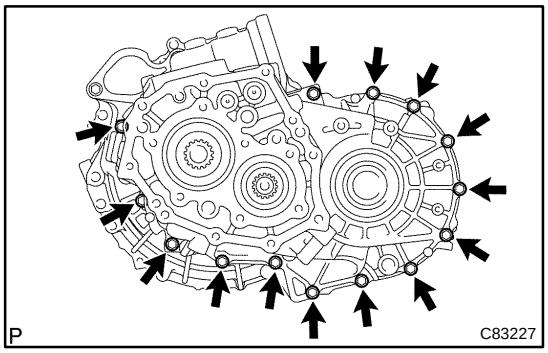

(n) Remove the 14 bolts and manual transmission case from the manual transaxle case.

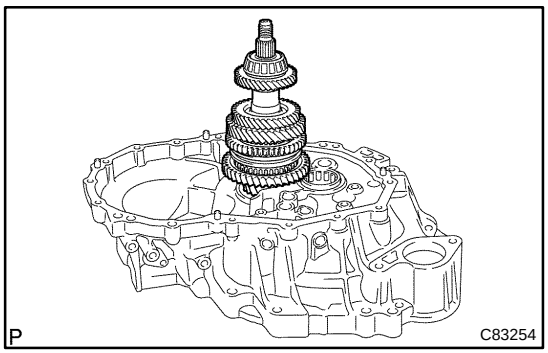

(o) Remove the output shaft assy from the front manual transaxle case.

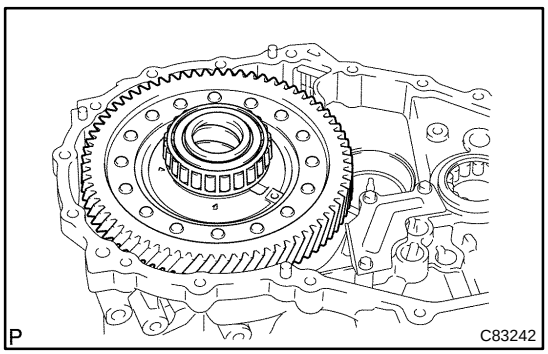

76. ADJUST TAPERED POLLER BEARING PRELOAD

(a) Install differential case assy to the manual transaxle case.

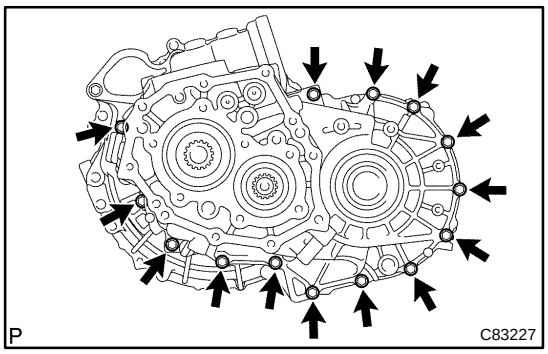

(b) Install the 14 bolts and manual transmission case to the manual transaxle case.
Torque: 29 N·m (296 kgf·cm, 21 ft·lbf)

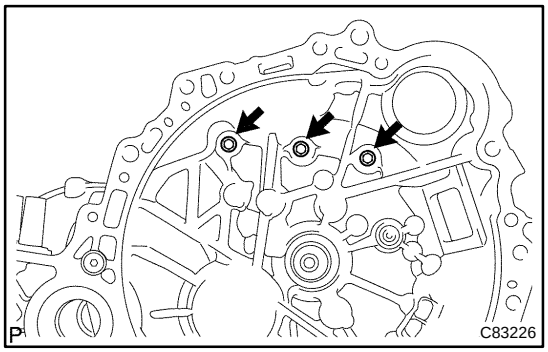

(c) Install the 3 bolts and front manual transaxle case side.
Torque: 30 N·m (306 kgf·cm, 22 ft·lbf)

(d) Turn the differential case in both directions to make it smooth.

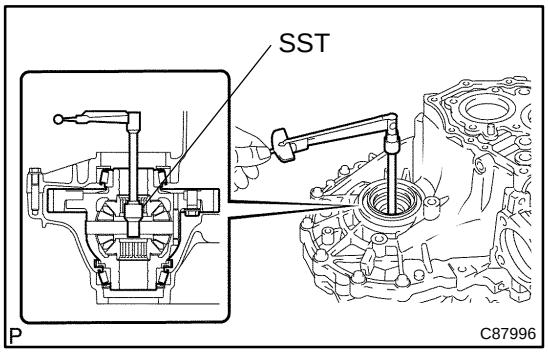

(e) Using SST and torque wrench, inspect preload.
SST 09564–32011

Preload: N·m (kgf·cm, in.·lbf)

Bearing	Torque
New	0.8 – 1.6 (8.16 – 16.32, 7.1 – 14.2)
Used	0.5 – 1.0 (5.10 – 10.2, 4.4 – 8.9)

If the preload is out of the specification, select the front differential case shim RR and adjust it.

HINT:

The preload of the front differential case shim RR varies in torque from about 0.04 to 0.06 N·m is one size.

Shim: mm (in.)

Part No.	Thickness	Mark
90564–56055	2.00 (0.0787)	0
90564–56056	2.05 (0.0807)	1
90564–56057	2.10 (0.0827)	2
90564–56058	2.15 (0.0846)	3
90564–56059	2.20 (0.0866)	4
90564–56060	2.25 (0.0886)	5
90564–56061	2.30 (0.0906)	6
90564–56062	2.35 (0.0925)	7
90564–56063	2.40 (0.0945)	8
90564–56064	2.45 (0.0965)	9
90564–56065	2.50 (0.0984)	A
90564–56066	2.55 (0.1004)	B
90564–56067	2.60 (0.1024)	C
90564–56068	2.65 (0.1043)	D
90564–56069	2.70 (0.1063)	E
90564–56070	2.75 (0.1083)	F

Part No.	Thickness	Mark
90564–56071	2.80 (0.1102)	G
90564–56072	2.85 (0.1122)	H

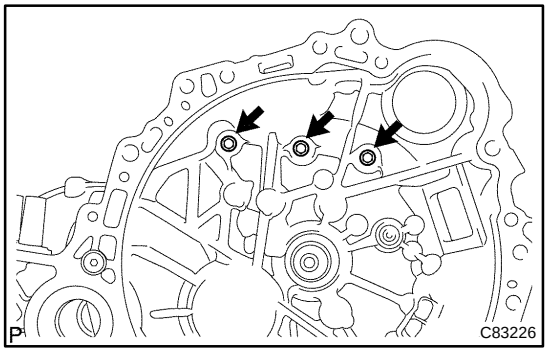

(f) Remove the 3 bolts.

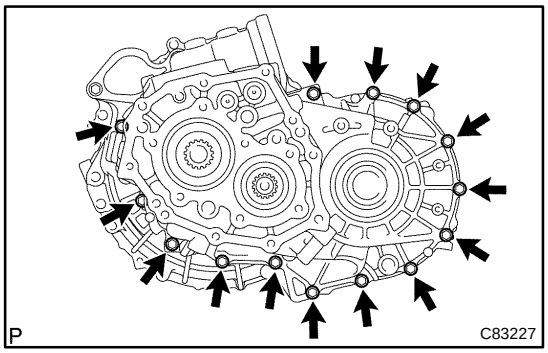

(g) Remove the 14 bolts and manual transmission case to the manual transaxle case.

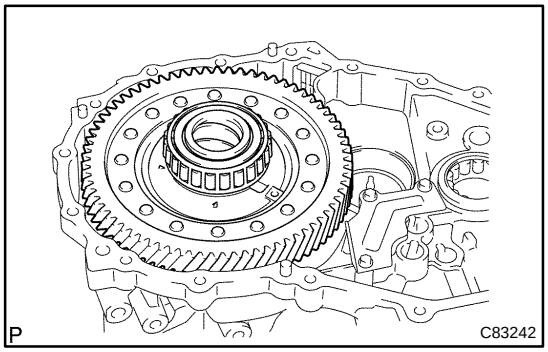

(h) Remove the differential case assy from the manual transaxle case.

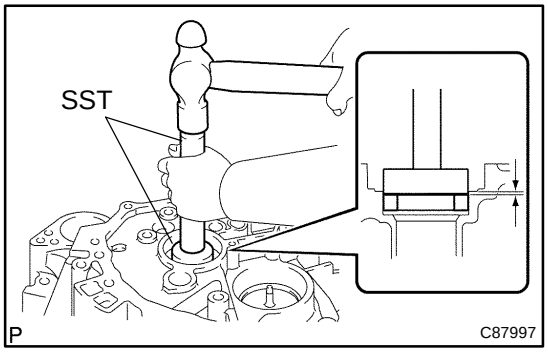

77. INSTALL FRONT TRANSAXLE CASE OIL SEAL

(a) Using SST and a hammer, install the front transaxle case oil seal No.1 to the manual transaxle case.
SST 09950–60010 (09951–00420), 09950–70010 (09951–07150)

(b) Coat the lip of front transaxle case oil seal No.1 with MP grease.
Clearance: 1 – 2 mm (0.0394 – 0.0787 in.)

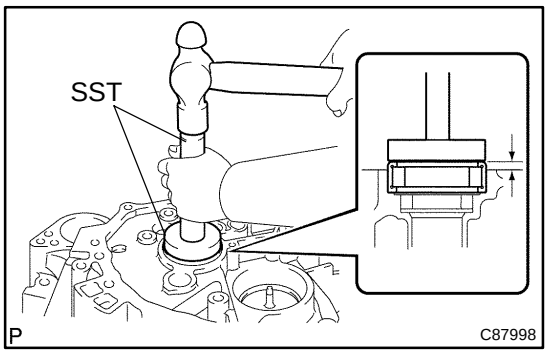

78. INSTALL INPUT SHAFT FRONT BEARING

(a) Coat the input shaft front bearing with gear oil, install it to the manual transaxle case.
SST 09950–60010 (09951–00570), 09950–70010 (09951–07150)
Clearance: 4.28 – 4.60 mm (0.1685 – 0.1811 in.)

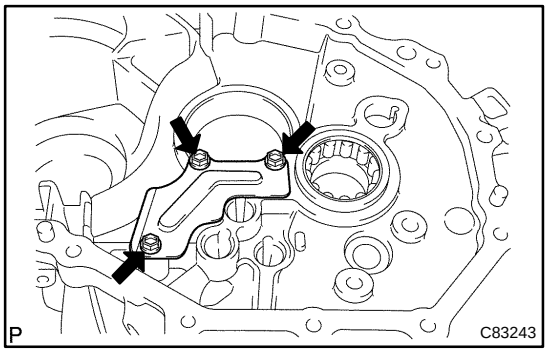

79. INSTALL MANUAL TRANSAXLE CASE RECEIVER

(a) Install the 3 bolts and manual transaxle case receiver to the manual transaxle case.
Torque: 7.0 N·m (71 kgf·cm, 62 in.·lbf)

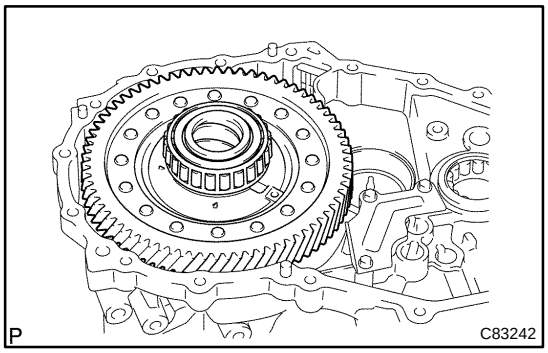

80. INSTALL DIFFERENTIAL CASE ASSY

(a) Coat the differential case taper roller bearing with gear oil, install the differential case assy to the manual transaxle case.

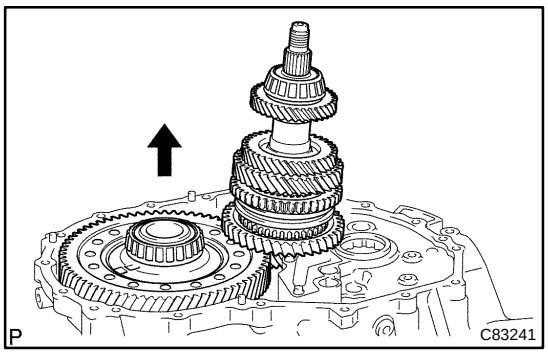

81. INSTALL OUTPUT SHAFT ASSY

(a) Apply gear oil to each sliding part of the output shaft assy.
(b) Lift the differential case assy up with the output shaft assy leaned, and install it to the manual transaxle case.

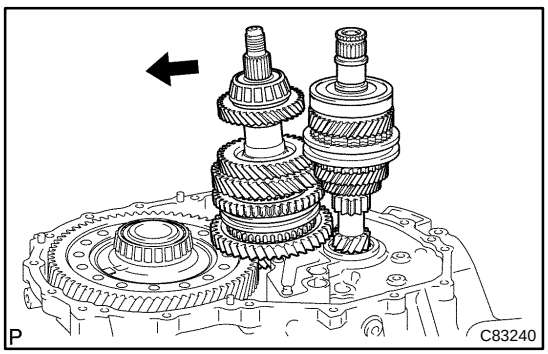

82. INSTALL INPUT SHAFT ASSY

(a) Apply gear oil to each sliding part of the input shaft assy.
(b) With the output shaft assy leaned, install the input shaft assy to the manual transaxle case.

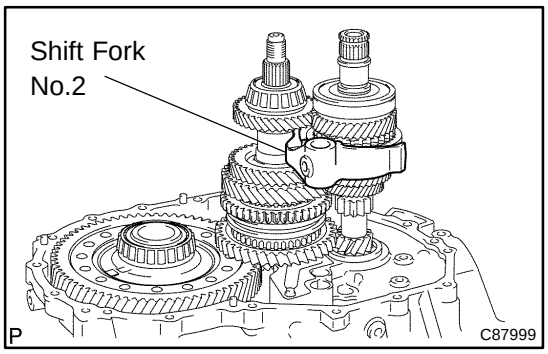

83. INSTALL GEAR SHIFT FORK NO.2

(a) Coat the gear shift fork No.2 with gear oil, install it to the input shaft assy.

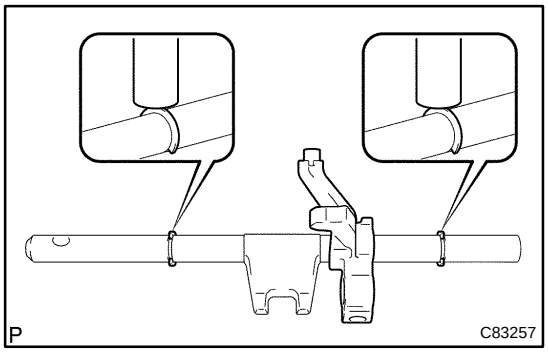

84. INSTALL GEAR SHIFT FORK NO.3

(a) Install the gear shift fork No.3 to the gear shift fork shaft No.3.
(b) Using a brass bar and hammer, install the 2 shift fork shaft snap rings to the gear shift fork shaft.

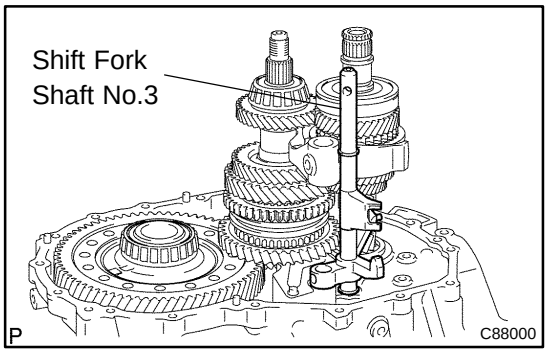

(c) Apply gear oil to each sliding part of the gear shift fork shaft No.3, install it to the manual transaxle case.

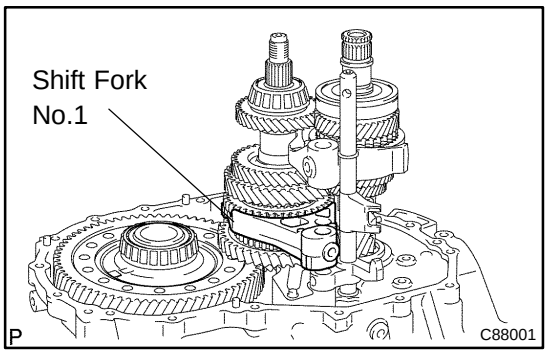

85. INSTALL GEAR SHIFT FORK NO.1

(a) Apply gear oil to each sliding part of the gear shift fork No.1, install it to the output shaft assy.

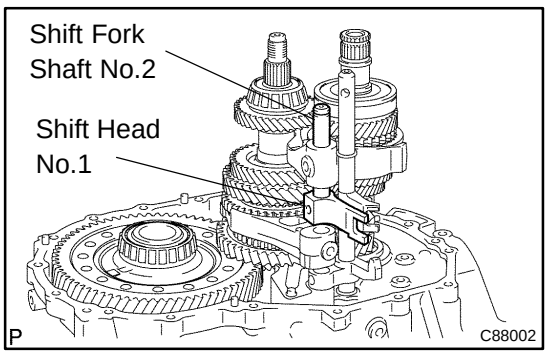

86. INSTALL GEAR SHIFT FORK SHAFT NO.2

(a) Install the gear shift head No.1 to the gear shift fork shaft No.2.
(b) Apply gear oil to each sliding part of the gear shift fork shaft No.2, install it to the manual transaxle case.

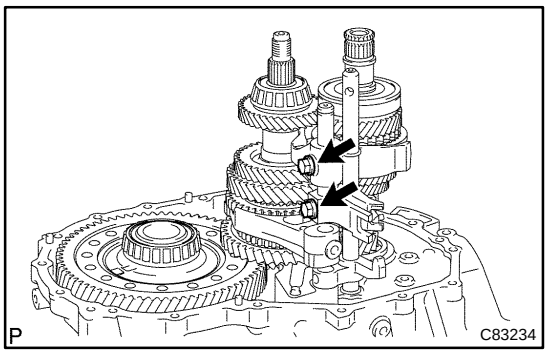

(c) Install the 2 shift fork bolts to the gear shift head No.1.
Torque: 24 N·m (245 kgf·cm, 18 ft·lbf)

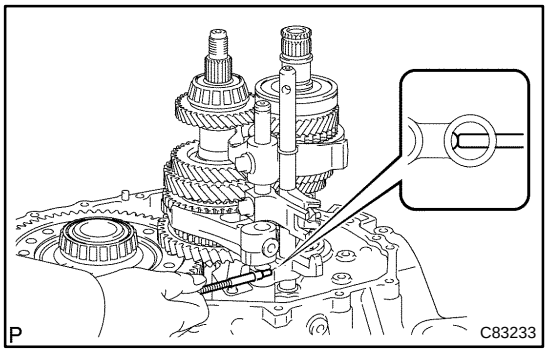

87. INSTALL REVERSE SHIFT FORK ROLLER

(a) Using a magnetic finger, install the reverse shift fork roller to the reverse shift fork.

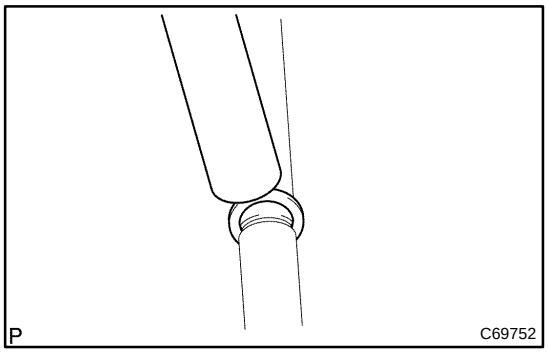

88. INSTALL GEAR SHIFT FORK SHAFT NO.1

(a) Using a brass bar and hammer, install the shift fork shaft snap ring to the shift fork shaft No.1.

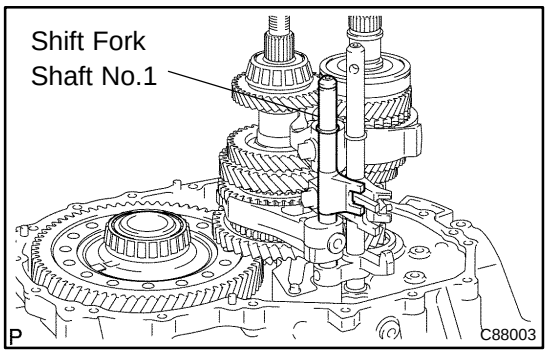

(b) Install the gear shift fork shaft No.1 to the manual transaxle case.

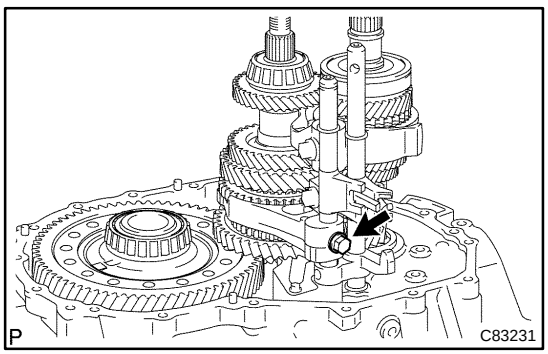

(c) Install the shift fork bolt to the gear shift fork No.1.
Torque: 24 N·m (245 kgf·cm, 18 ft·lbf)

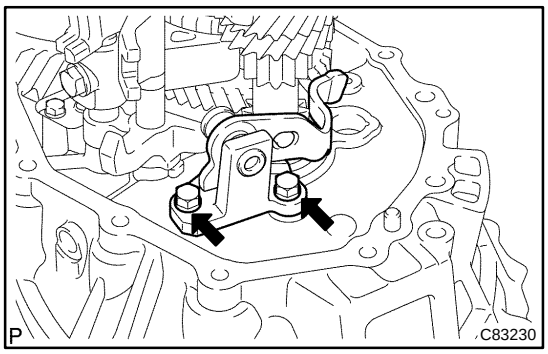

89. INSTALL REVERSE SHIFT ARM BRACKET ASSY

(a) Install the 2 bolts and reverse shift arm bracket assy to the manual transaxle case.
Torque: 17 N·m (173 kgf·cm, 13 ft·lbf)

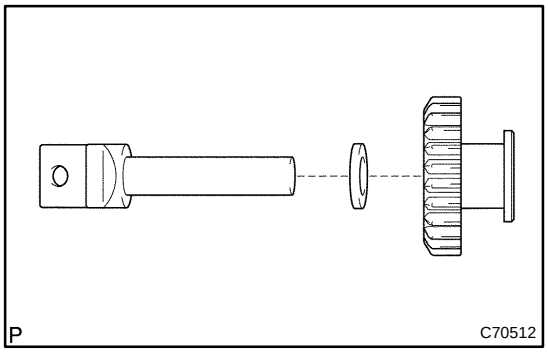

90. INSTALL REVERSE IDLER GEAR SUB–ASSY

(a) Coat the reverse idler gear and reverse idler thrust washer with MP grease, install them to the reverse idler gear shaft.

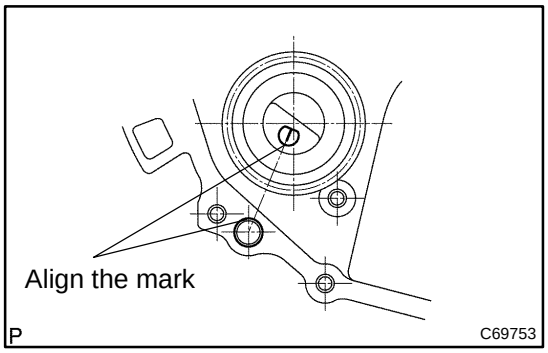

(b) Install the reverse idler gear to the manual transaxle case.
HINT:
Align the mark of the reverse idler gear shaft with the hole of the bolt.

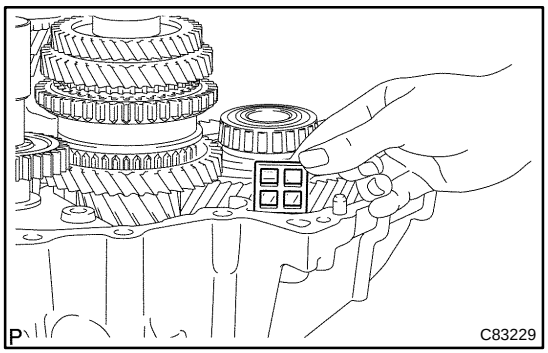

91. INSTALL TRANSMISSION MAGNET

(a) Clean the transmission magnet, install it to the manual transaxle case.

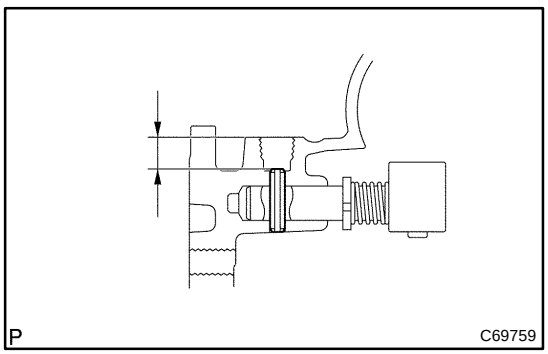

92. INSTALL REVERSE RESTRICT PIN ASSY

(a) Using a pin punch (ϕ 5mm), install the reverse restrict pin and reverse restrict pin assy.
Clearance: 12.5 – 13.5 mm (0.492 – 0.531 in.)

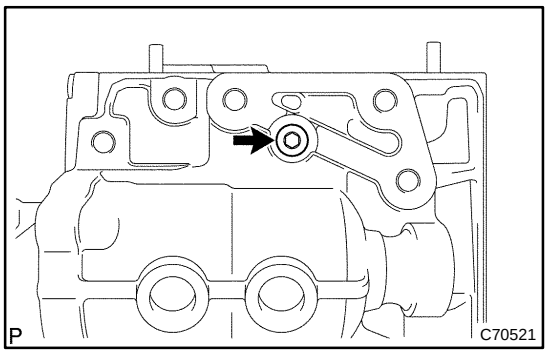

(b) Coat the reverse restrict pin plug with adhesive 1324, using hexagon wrench (6mm), install the manual transmission case.
Torque: 13 N·m (133 kgf·cm, 9.6 ft·lbf)

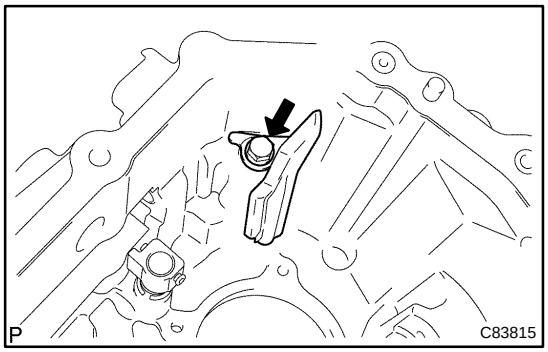

93. INSTALL OIL RECEIVER PIPE NO.1 (MTM)

(a) Install the bolt and oil receiver pipe No.1 (MTM) to the manual transmission case.
Torque: 17 N·m (173 kgf·cm, 13 ft·lbf)

HINT:
Tighten the oil receiver pipe No.1 with the bolt.

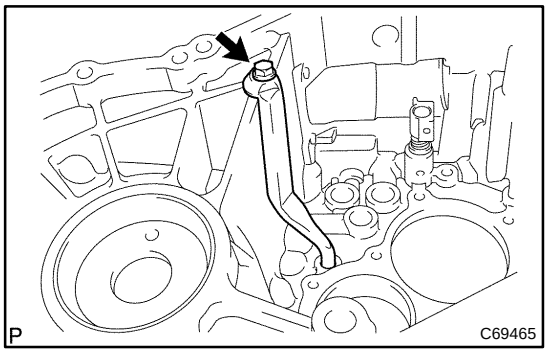

94. INSTALL OIL RECEIVER PIPE NO.2 (MTM)

(a) Install the bolt and oil receiver pipe No.2 (MTM) to the manual transmission case.
Torque: 17 N·m (173 kgf·cm, 13 ft·lbf)

HINT:
Tighten the oil receiver pipe No.2 (MTM) with the bolt while manual transmission case is being put.

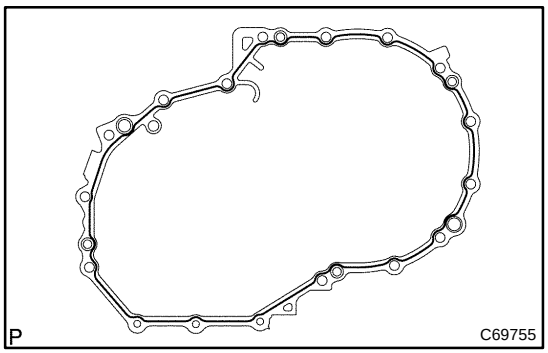

95. INSTALL MANUAL TRANSMISSION CASE

(a) Apply FIPG bead condition sequentially to the position shown in the diagram of the manual transmission case.

HINT:
Install within 10 minutes after applying FIPG.

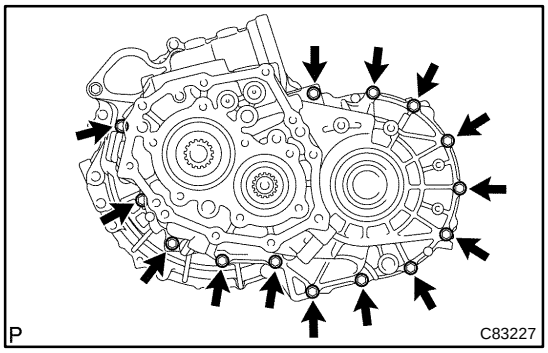

(b) Install the manual transmission case and 14 bolts to the manual transaxle case.
Torque: 29 N·m (296 kgf·cm, 21 ft·lbf)

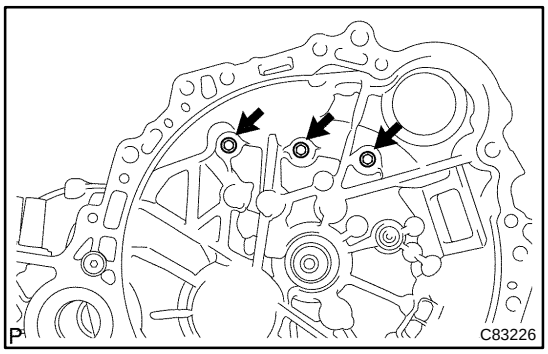

(c) Install the 3 bolts to the manual transaxle case side.
Torque: 30 N·m (306 kgf·cm, 22 ft·lbf)

96. INSTALL CLUTCH TUBE BRACKET NO.1

(a) Install the clutch tube with 3 bolt brackets.
Torque: 17 N·m (173 kgf·cm, 13 ft·lbf)

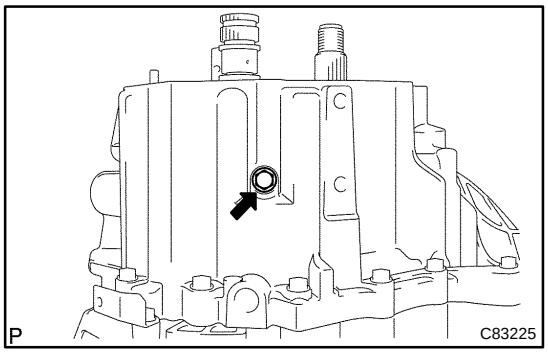

97. INSTALL REVERSE IDLER GEAR SHAFT BOLT

(a) Coat the bolt with sealant, install new gasket to the manual transmission case with the bolt.
Torque: 30 N·m (306 kgf·cm, 22 ft·lbf)
Sealant:
Part No. 08833–00080, THREE BOND 1344, LOCTITE 242 or equivalent

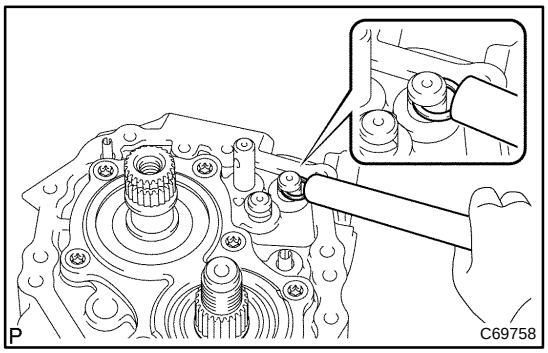

98. INSTALL SHIFT FORK SHAFT SHAFT SNAP RING

(a) Using a brass bar and hammer, install the shift fork shaft snap ring to the gear shift fork shaft No.1.

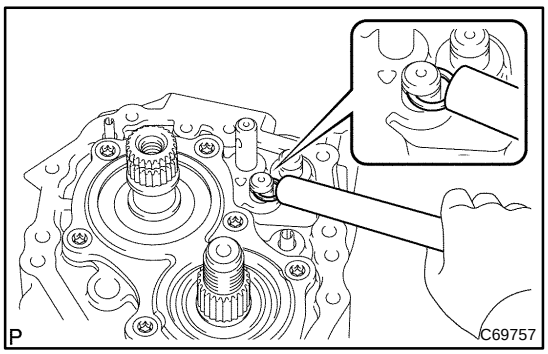

(b) Using a brass bar and hammer, install the shift fork shaft snap ring to the gear shift fork shaft No.2.

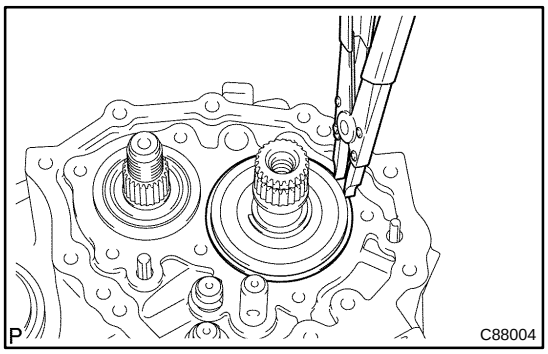

99. INSTALL INPUT SHAFT REAR BEARING SHAFT SNAP RING

(a) Using a snap ring expander, install the input shaft rear bearing hole snap ring.

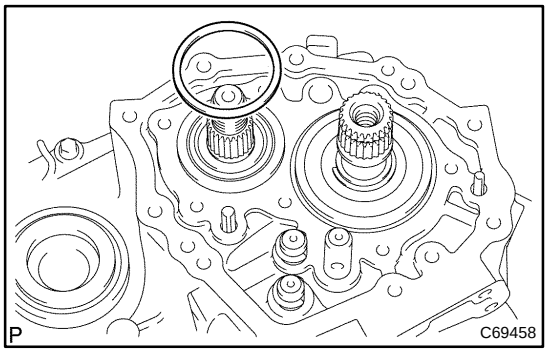

100. INSTALL OUTPUT SHAFT REAR BEARING SHIM

(a) Install the output shaft rear bearing shim to the output shaft.

HINT:
Install the same thickness of the case shim as the remove one.

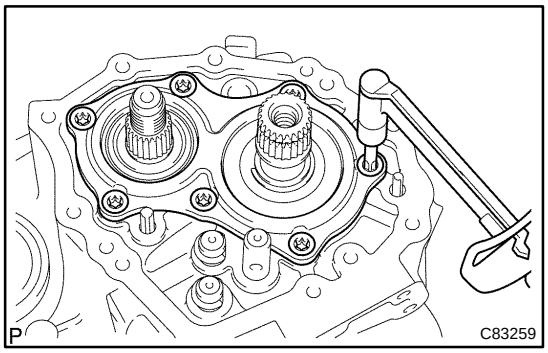

101. INSTALL BEARING RETAINER REAR (MTM)

(a) Coat the bearing retainer rear (MTM) with sealant, install it with a torx wrench (T45).
Torque: 42 N·m (428 kgf·cm, 31 ft·lbf)

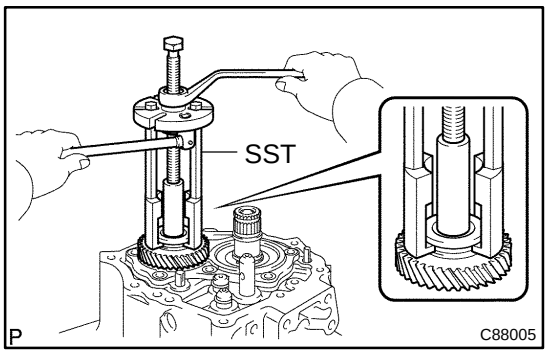

102. INSTALL 5TH DRIVEN GEAR

(a) Using SST, install the 5th driven gear to the output shaft.
SST 09950–30012 (09951–03010, 09953–03010, 09954–03010, 09956–03030, 09955–03011)

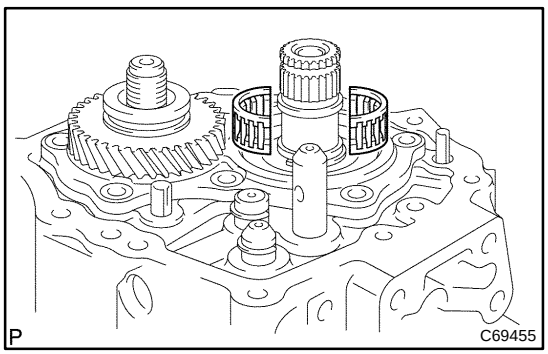

103. INSTALL 5TH GEAR NEEDLE ROLLER BEARING

(a) Coat the 5th gear needle roller bearing with gear oil, install it to the input shaft.

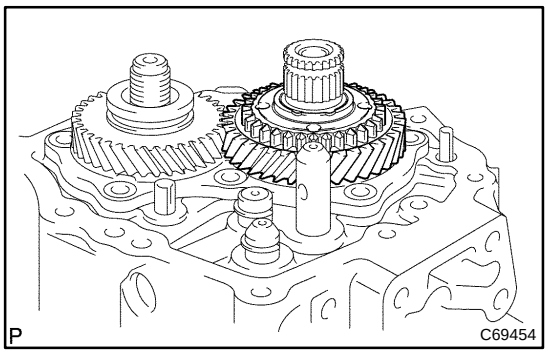

104. INSTALL 5TH GEAR

(a) Coat the 5th gear with gear oil, install it to the input shaft.

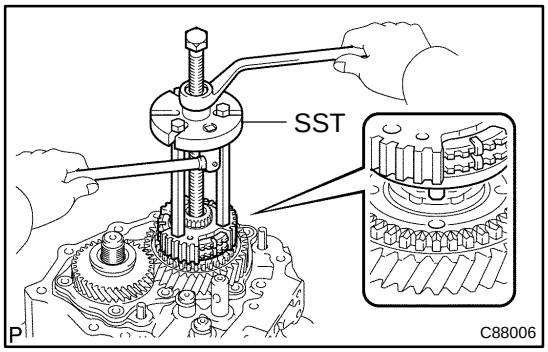

105. INSTALL TRANSMISSION CLUTCH HUB NO.3

(a) Using SST, install the transmission clutch hub No.3 to the input shaft.
SST 09950–30012 (09951–03010, 09953–03010, 09954–03010)

NOTICE:
Align the projection of the synchronizer ring with the hole of the 5th gear and install them.

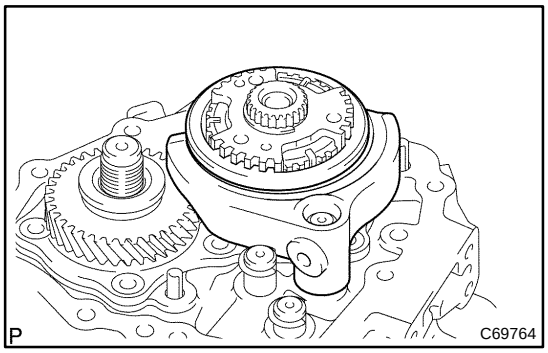

(b) Install the transmission hub sleeve No.3 and gear shift fork No.3 to the transmission clutch hub No.3.

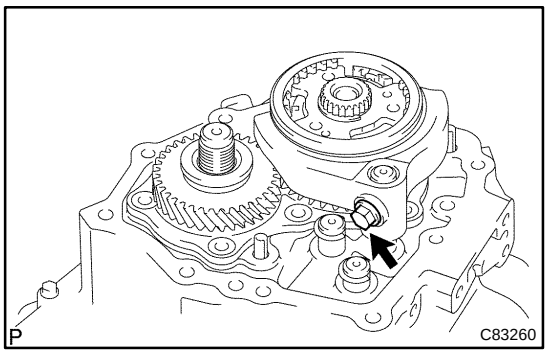

(c) Coat the shift fork bolt with sealant, install the gear shift fork No. 3.
Sealant:
Part No. 08833–00080, THREE BOND 1344, LOCTITE 242 or equivalent
Torque: 24 N·m (245 kgf·cm, 18 ft·lbf)

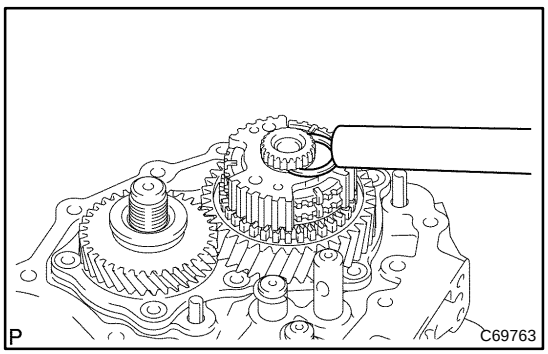

(d) Select a snap ring that will allow minimum axial play. Using a brass bar and a hammer, install the shaft snap ring.
Clearance: 0.1 mm or less

Snap ring: mm (in.)

Part No.	Thickness	Mark
90520–27061	1.75 – 1.80 (0.0689 – 0.0709)	a
90520–27062	1.80 – 1.85 (0.0709 – 0.0728)	b

Part No.	Thickness	Mark
90520–27063	1.85 – 1.90 (0.0728 – 0.0748)	c
90520–27064	1.90 – 1.95 (0.0748 – 0.0768)	d
90520–27065	1.95 – 2.00 (0.0768 – 0.0787)	e
90520–27066	2.00 – 2.05 (0.0787 – 0.0807)	f
90520–27067	2.05 – 2.10 (0.0807 – 0.0827)	g
90520–27068	2.10 – 2.15 (0.0827 – 0.0846)	h
90520–27069	2.15 – 2.20 (0.0846 – 0.0866)	j

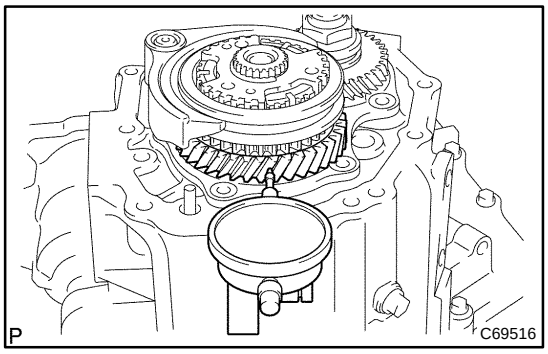

106. INSPECT 5TH GEAR RADIAL CLEARANCE

(a) Using a dial indicator, inspect the 5th gear radial clearance.

Standard clearance:
0.009 – 0.050 mm (0.0004 – 0.0020 in.)

If the clearance is out of the specification, replace 1st gear needle roller bearing.

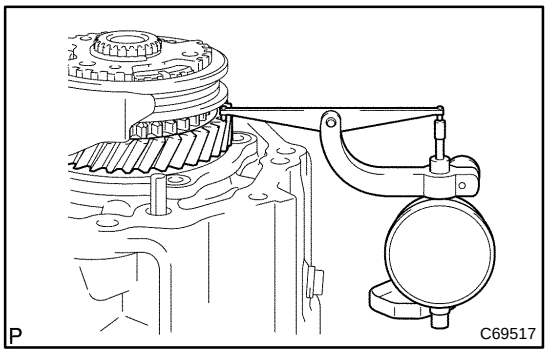

107. INSPECT 5TH GEAR THRUST CLEARANCE

(a) Using a dial indicator, inspect the 5th gear thrust clearance.

Standard clearance:
0.10 – 0.65 mm (0.0039 – 0.0260 in.)

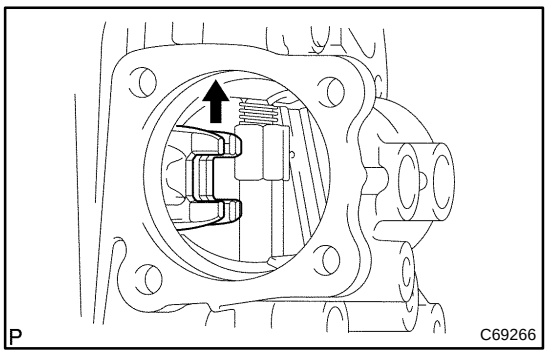

108. INSTALL MANUAL TRANSMISSION OUTPUT SHAFT REAR SET NUT

(a) Engage the gear double meshing.

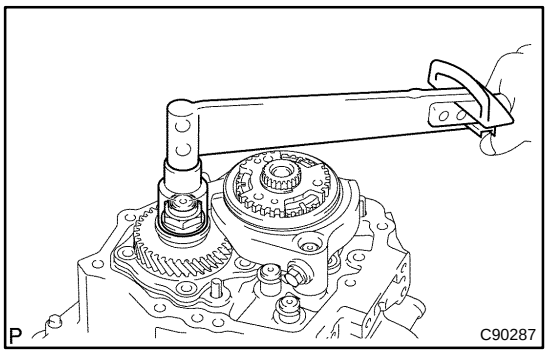

(b) Install the new manual transmission output shaft rear set nut.
Torque: 123 N·m (1,254 kgf·cm, 91 ft·lbf)

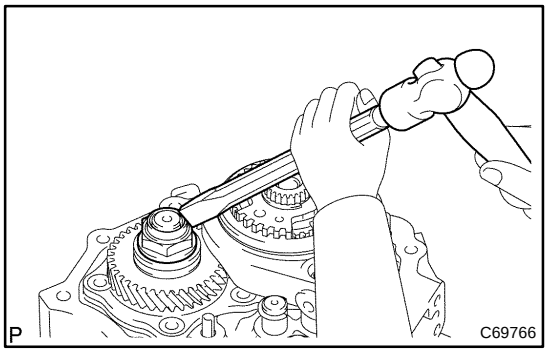

(c) Using a chisel and a hammer, stake the manual transmission output shaft rear set nut.

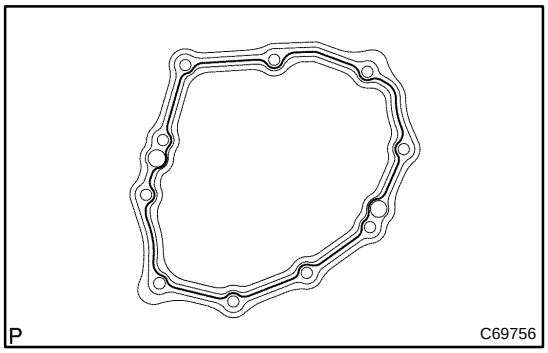

109. INSTALL MANUAL TRANSMISSION CASE COVER SUB–ASSY

(a) Apply FIPG to the transaxle case cover sub–assy, as shown in the installation.
FIPG:
Part No. 08826–00090, THREE BOND 1281

NOTICE:
Install the parts within 10 minutes after applying the packing material (FIPG).

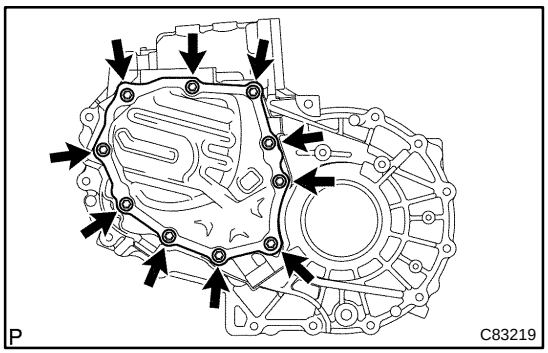

(b) Install the transmission case cover sub–assy with 10 bolts to the manual transaxle case.

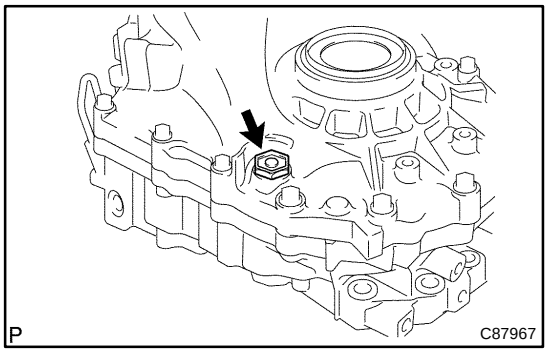

110. INSTALL DRAIN (MTM) PLUG SUB–ASSY

(a) Install the drain plug sub–assy with new gasket to the manual transmission case.
Torque: 49 N·m (500 kgf·cm, 36 ft·lbf)

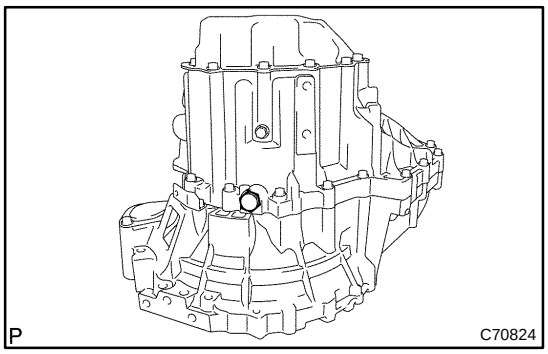

111. INSTALL MANUAL TRANSMISSION FILLER PLUG

(a) Install the manual transmission filler plug with new gasket to the oil seal.
Torque: 49 N·m (500 kgf·cm, 36 ft·lbf)

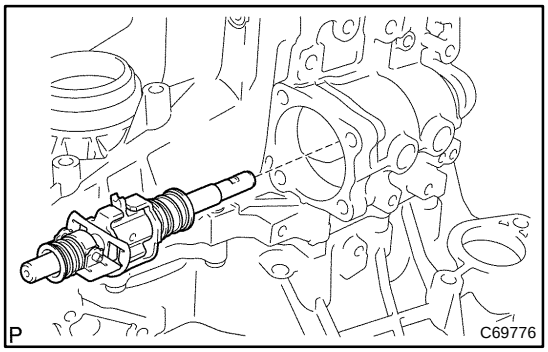

112. INSTALL SHIFT & SELECT LEVER SHAFT ASSY

(a) Coat the shift & select lever shaft assy with gear oil, install it to the manual transmission case.

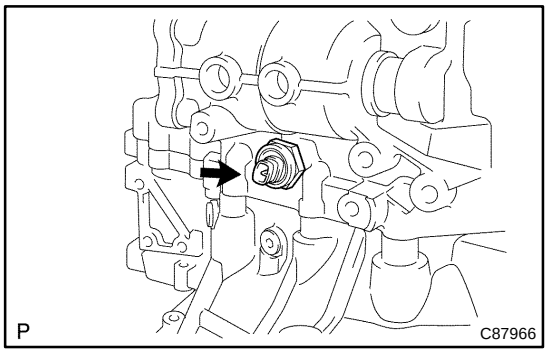

113. INSTALL BACK UP LAMP SWITCH ASSY

(a) Install back up lamp switch assy to the manual transmission case.
Torque: 40 N·m (408 kgf·cm, 30 ft·lbf)

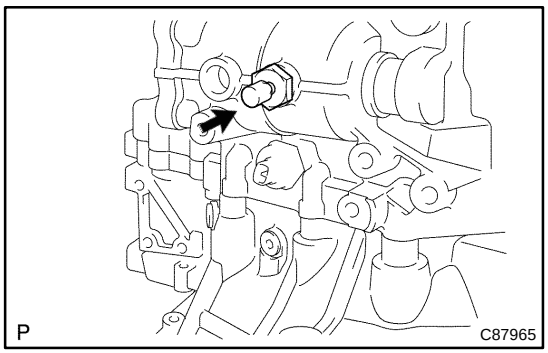

114. INSTALL MANUAL TRANSMISSION BREATHER PLUG

(a) Install the new gasket with manual transmission breather plug to the manual transmission case.
Torque: 49 N·m (500 kgf·cm, 36 ft·lbf)

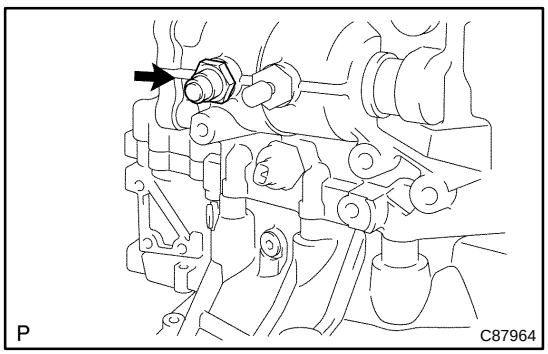

115. INSTALL LOCK BALL ASSY NO.1

(a) Install the lock ball assy No.1 to the manual transmission case.
Torque: 29 N·m (296 kgf·cm, 21 ft·lbf)

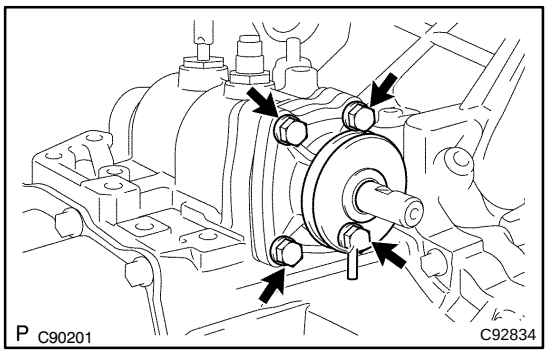

116. INSTALL CONTROL SHAFT COVER

(a) Coat the 4 bolts with sealant, install new gasket with control shaft cover with the bolt.
Sealant:
Part No. 08833–00080, THREE BOND 1344, LOCTITE 242 or equivalent
Torque: 20 N·m (204 kgf·cm, 15 ft·lbf)

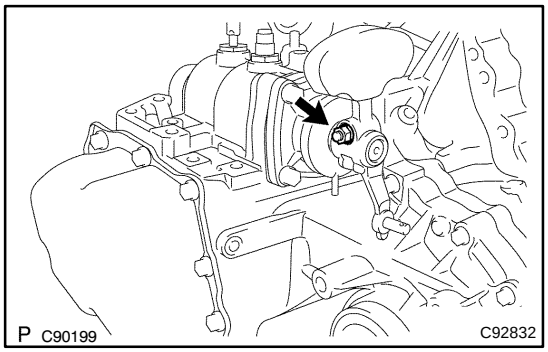

117. INSTALL CONTROL SHIFT LEVER

(a) Install the control shift lever with shift outer lock pin to the shift & select lever shaft.
(b) Install the spring washer with nat.
Torque: 6.4 N·m (65 kgf·cm, 57 in.·lbf)

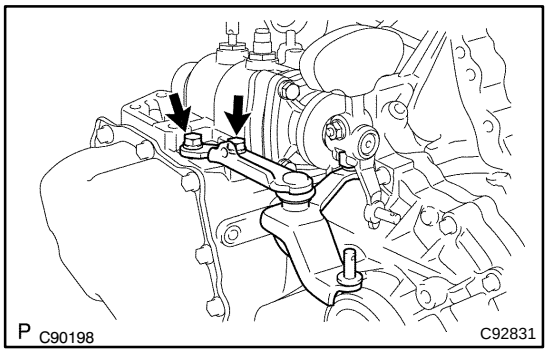

118. INSTALL SELECTING BELL CRANK ASSY

(a) Coat the 2 bolts with sealant, install it with selecting bell crank assy to the manual transmission case.
Sealant:
Part No. 08833–00080, THREE BOND 1344, LOCTITE 242 or equivalent
Torque: 20 N·m (204 kgf·cm, 15 ft·lbf)

119. INSTALL SPEEDOMETER DRIVEN HOLE COVER SUB–ASSY

(a) Install the bolt and speedometer driven hole cover sub–assy to the transmission case.

120. INSTALL CLUTCH RELEASE FORK BOOT

(a) Install the clutch release fork bolt to the manual transaxle case.

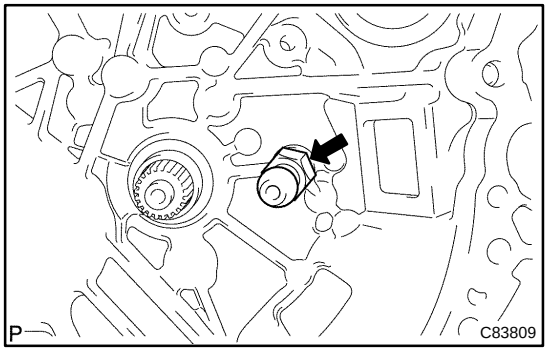

121. INSTALL RELEASE FORK SUPPORT

(a) Using a deep socket wrench, install the release fork support to the manual transaxle case.
Torque: 47.1 N·m (480 kgf·cm, 35 ft·lbf)

122. INSTALL CLUTCH RELEASE BEARING ASSY

(a) Coat the clutch release bearing assy with release hub grease, install it to the clutch release fork sub–assy.
Sealant:
Part No. 08887–01806, RELEASE HUB GREASE or equivalent
(b) Apply clutch spline grease to the input shaft spline.

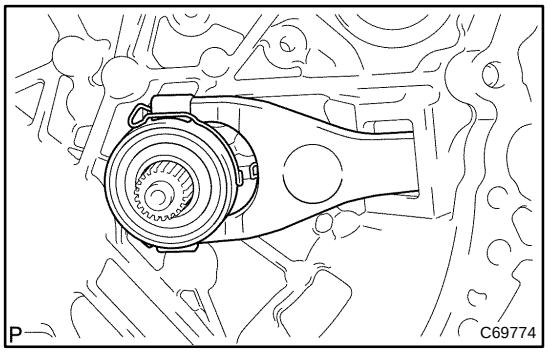

123. INSTALL CLUTCH RELEASE FORK SUB–ASSY

(a) Install the clutch release fork sub – assy to the input shaft.

INPUT SHAFT ASSY (E351)

OVERHAUL

4104Z–01

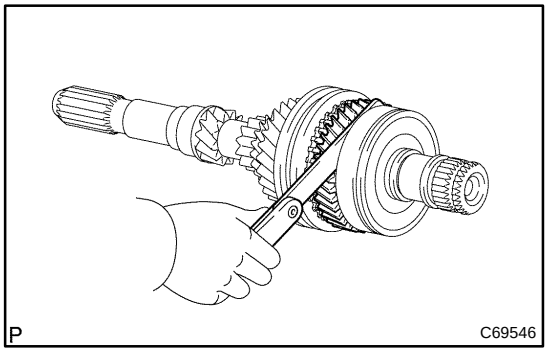

1. INSPECT 4TH GEAR THRUST CLEARANCE

(a) Using a feeler gauge, measure the 4th gear thrust clearance.

Standard clearance:
0.10 – 0.57 mm (0.0039– 0.0224 in.)

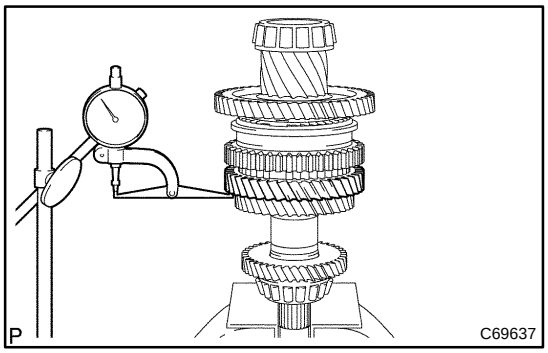

2. INSPECT 3RD GEAR THRUST CLEARANCE

(a) Using a dial indicator, measure the 3rd gear thrust clearance.

Standard clearance:
0.10 – 0.35 mm (0.0039 – 0.0138 in.)

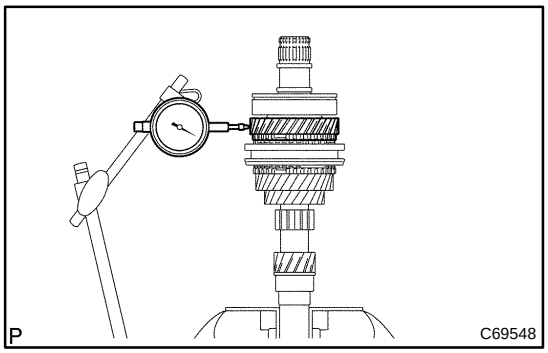

3. INSPECT 4TH GEAR RADIAL CLEARANCE

(a) Using a dial indicator, measure the 4th gear radial clearance.

Standard clearance: mm (in.)

Bearing	Standard clearance
KOYO made	0.009 – 0.053 (0.0004 – 0.0021)
NSK made	0.009 – 0.051 (0.0004 – 0.0020)

If the clearance exceeds the maximum, replace the 4th gear needle roller bearing.

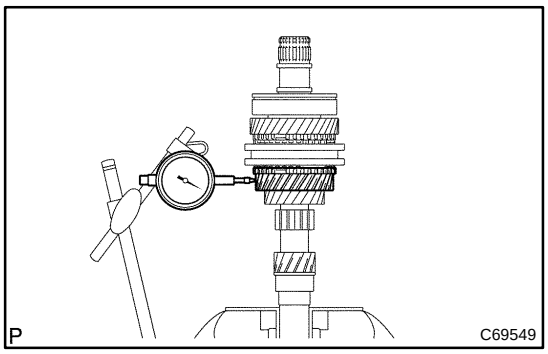

4. INSPECT 3RD GEAR RADIAL CLEARANCE

(a) Using a dial indicator, measure the 3rd gear radial clearance.

Standard clearance: mm (in.)

Bearing	Standard clearance
KOYO made	0.009 – 0.053 (0.0004 – 0.0021)
NSK made	0.009 – 0.051 (0.0004 – 0.0020)

If the clearance exceeds the maximum, replace the 3rd gear needle roller bearing.

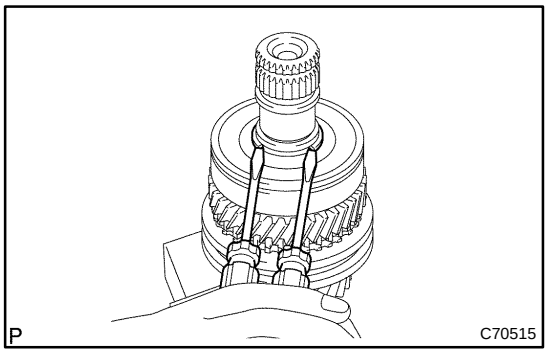

5. REMOVE 4TH GEAR

(a) Hold the input shaft assy and soft jaws with a vise.

(b) Using a 2 screwdrivers and a hammer, remove the input shaft rear bearing shaft snap ring from the input shaft.

NOTICE:

Using a waste to prevent the snap ring from being scattered.

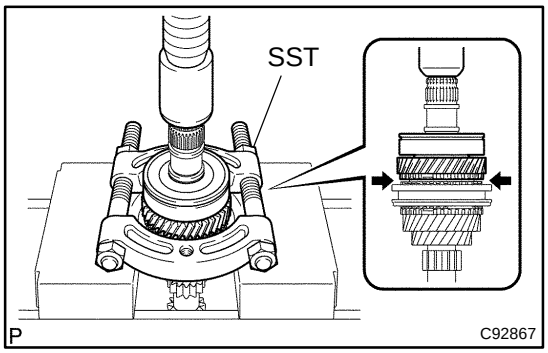

(c) Using SST and a press, remove the input shaft rear bearing and 4th gear.

SST 09950–00020

NOTICE:

Do not tighten SST excessively.

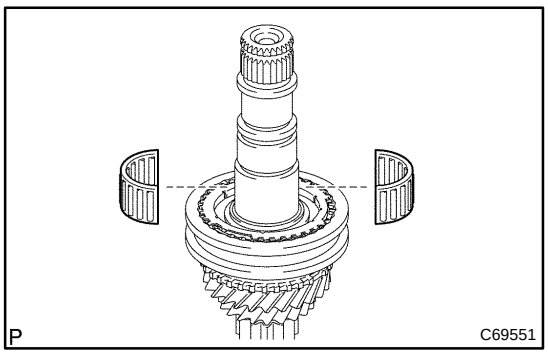

6. REMOVE 4TH GEAR NEEDLE ROLLER BEARING

(a) Remove the 4th gear needle roller bearing from the input shaft.

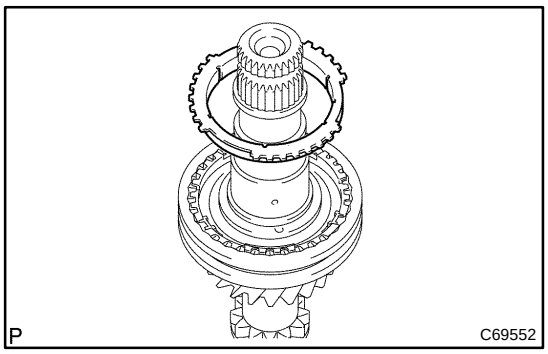

7. REMOVE 2ND SYNCHRONIZER OUTER RING

(a) Remove the 2nd synchronizer outer ring from the transmission clutch hub No.2.

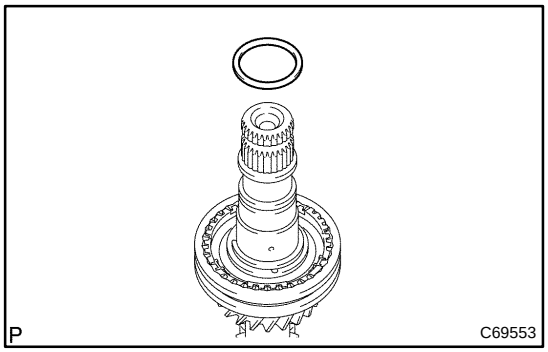

8. REMOVE 4TH GEAR BEARING SPACER

(a) Remove the 4th gear bearing spacer from the transmission clutch hub No.2.

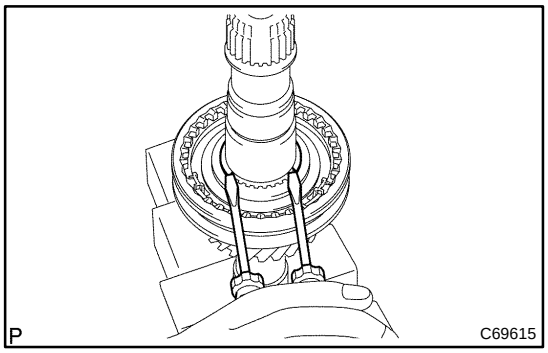

9. REMOVE 3RD GEAR

(a) Using 2 screwdrivers and a hammer, remove the clutch hub No.2 setting shaft snap ring from the input shaft.

NOTICE:
Using a waste to prevent the snap ring from being scattered.

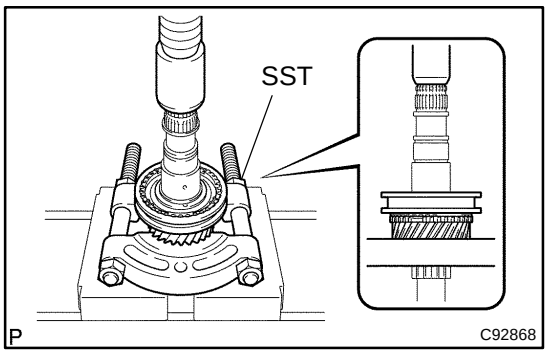

(b) Using SST and a press, remove the transmission clutch hub No.2 and 3rd gear from the input shaft.
SST 09950–00020

NOTICE:
Do not tighten SST excessively.

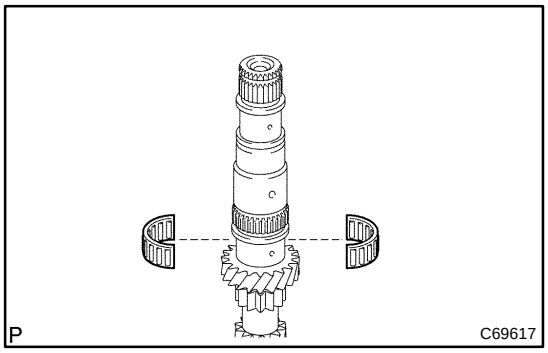

10. REMOVE 3RD GEAR NEEDLE ROLLER BEARING

(a) Remove the 3rd gear needle roller bearing from the input shaft.

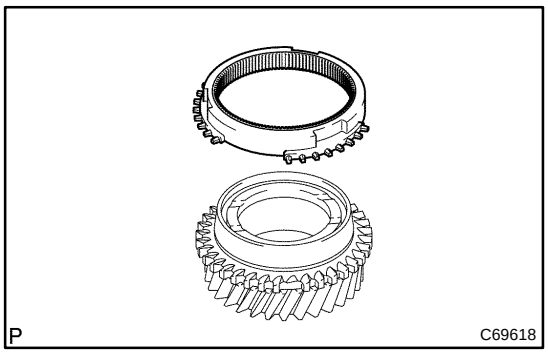

11. REMOVE SYNCHRONIZER RING NO.3

(a) Remove the synchronizer ring No.3 from the 3rd gear.

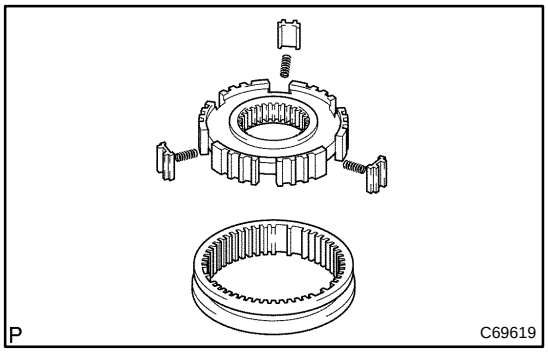

12. REMOVE TRANSMISSION HUB SLEEVE NO.2

(a) Remove the transmission hub sleeve No.2, 3 synchromesh shifting keys and 3 synchromesh shifting key springs from the transmission clutch hub No.2.

NOTICE:
Using a waste to prevent the shifting key and shifting key spring from being scattered.

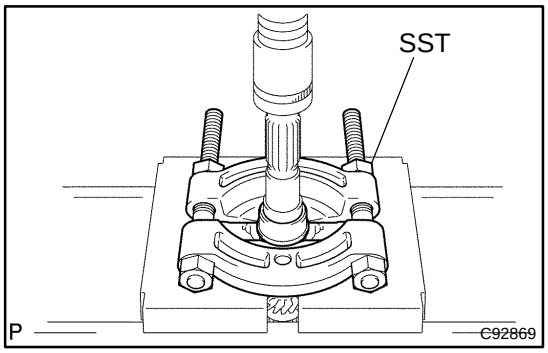

13. REMOVE INPUT SHAFT FRONT BEARING

(a) Using SST and a press, remove the input shaft bearing front (inner race) from the input shaft.
SST 09950–00020

NOTICE:
Do not tighten SST excessively.

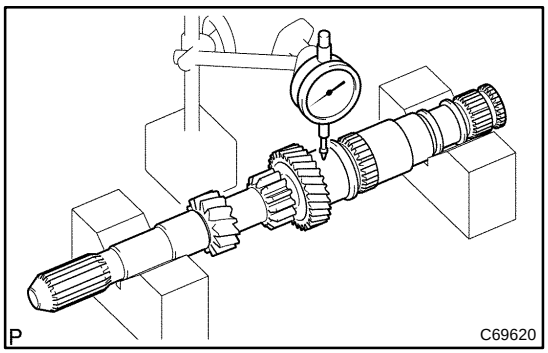

14. INSPECT INPUT SHAFT

(a) Using V–block and dial indicator, measure the shaft run out.
Maximum run out: 0.03 mm (0.0012 in.)

If the run out exceeds the maximum, replace the input shaft.

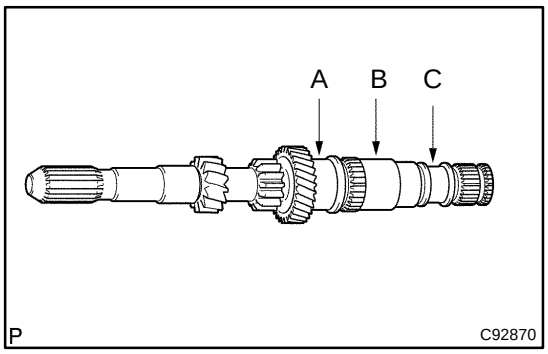

(b) Using a micrometer, measure the outer diameter of the input shaft journal surface.
Outer diameter: mm (in.)

	Standard outer diameter	Minimum outer diameter
A	35.984 – 36.000 (1.4167 – 1.4173)	35.984 (1.4167)
B	35.984 – 36.000 (1.4167 – 1.4173)	35.984 (1.4167)
C	27.957 – 27.972 (1.1007 – 1.1013)	27.957 (1.1007)

If the outer diameter is less than the minimum, replace the input shaft.

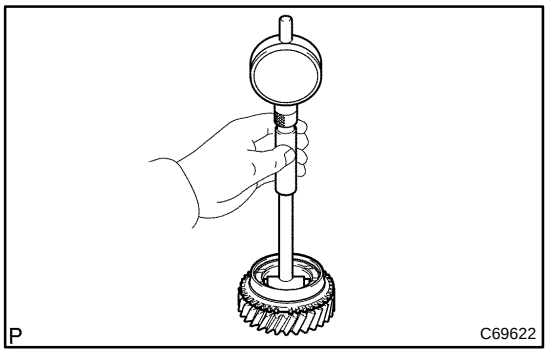

15. INSPECT 4TH GEAR

(a) Using a cylinder gauge, measure the inside diameter of the 4th gear.
Inside diameter: mm (in.)

Standard inside diameter	Maximum inside diameter
42.009 – 42.025 (1.6539 – 1.6545)	42.025 (1.6545)

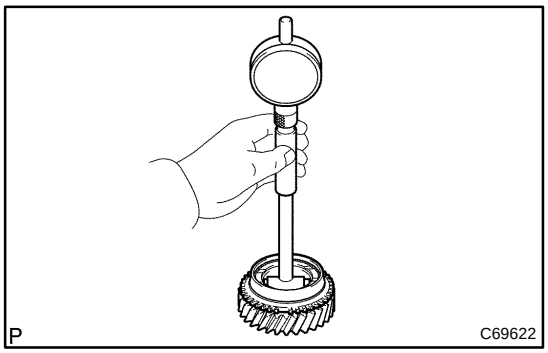

16. INSPECT 3RD GEAR

(a) Using a cylinder gauge, measure the inside diameter of the 3rd gear.
Inside diameter: mm (in.)

Standard inside diameter	Maximum inside diameter
43.009 – 43.025 (1.6933 – 1.6939)	43.025 (1.6939)

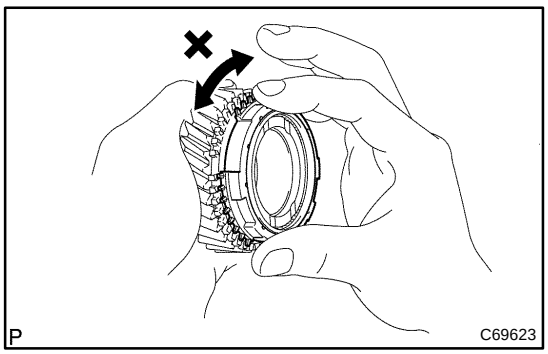

17. INSPECT 2ND SYNCHRONIZER OUTER RING

(a) Coat the 4th gear cone with gear oil. Turn the synchronizer ring No.3 in one direction while pushing it to the 4th gear cone. Check that the ring locks.

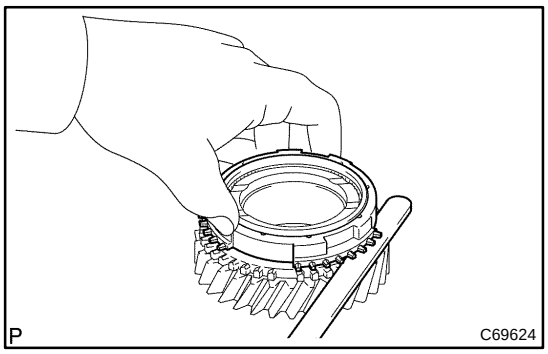

(b) Using a feeler gauge, measure the clearance between the synchronizer outer ring back and 4th gear spline end.
Standard clearance:
0.75 – 1.65 mm (0.0295 – 0.0650 in.)

If the standard clearance is out of specification, replace the synchronizer ring.

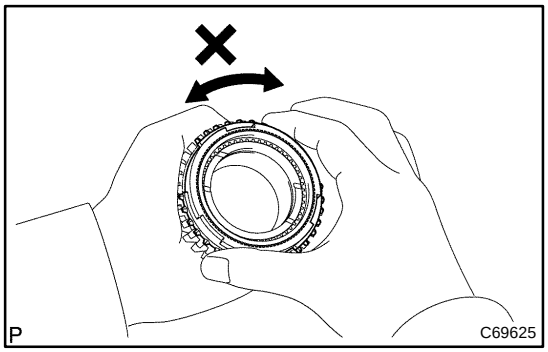

18. INSPECT SYNCHRONIZER RING NO.3

(a) Coat the 3rd gear cone with gear oil. Turn the synchronizer outer ring in one direction while pushing it to the 3rd gear cone. Check that the ring locks.

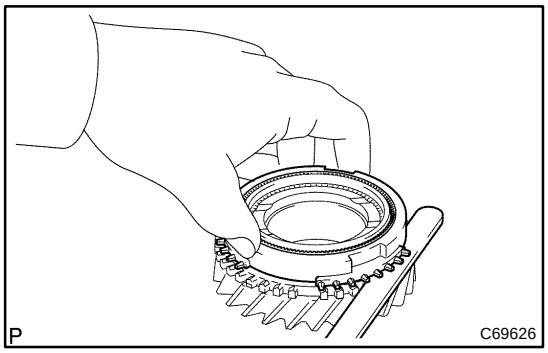

(b) Using a feeler gauge, measure the clearance between the synchronizer ring No.3 back and 3rd gear spline end.
Standard clearance:
0.65 – 1.75 mm (0.0256 – 0.0689 in.)

If the standard clearance is out of specification, replace the synchronizer ring No.3.

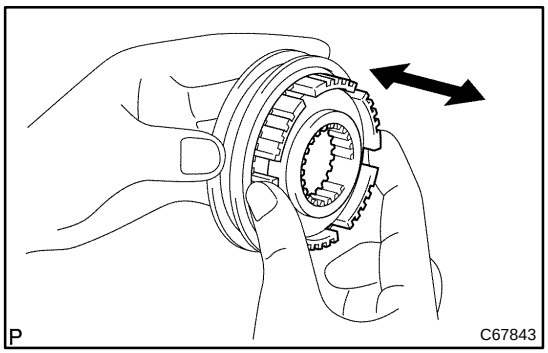

19. INSPECT TRANSMISSION HUB SLEEVE NO.2

(a) Inspect the sliding condition between transmission hub sleeve No.2 and transmission clutch hub No.2.

(b) Inspect tip of spline gear on the transmission hub sleeve No.2 for wear.

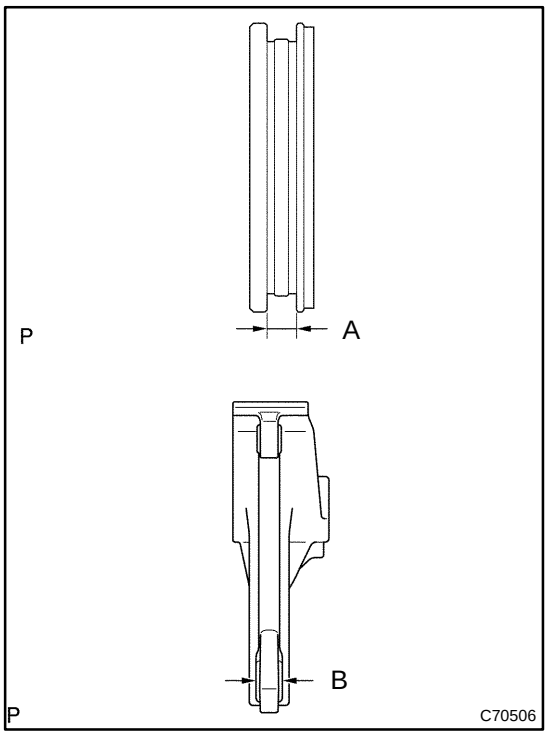

(c) Using a vernier calipers, measure the transmission hub sleeve No.3 groove and the thickness of the claw part on gear shift fork No.1, and calculate the clearance.
Standard clearance:
0.15 – 0.35 mm (0.0059 – 0.0138 in.) {A – B}

If the clearance is out of the specification, replace the transmission hub sleeve No.2 and gear shift fork No.2 with the new one.

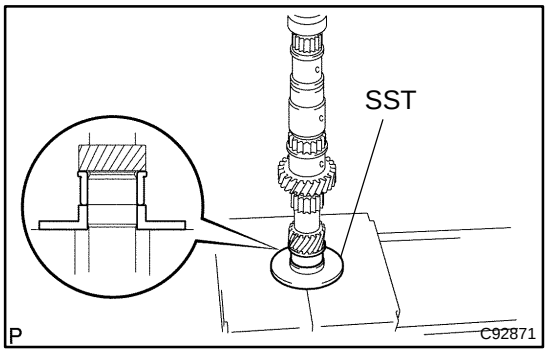

20. INSTALL INPUT SHAFT FRONT BEARING

(a) Using SST and a press, install the input shaft front bearing (inner race).
SST 09608–00071

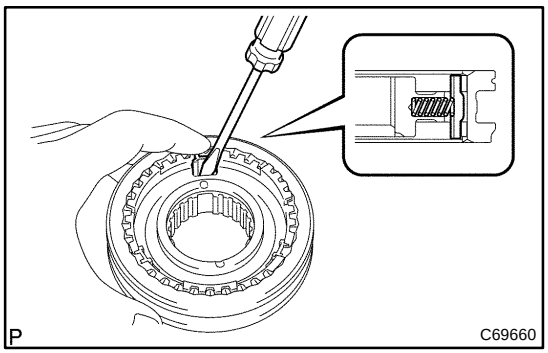

21. INSTALL TRANSMISSION HUB SLEEVE NO.2

(a) Coat the transmission hub sleeve No.2 with gear oil.
(b) Install the 3 synchromesh key springs with transmission hub sleeve No.2.

NOTICE:
Do not install the transmission clutch hub sleeve No.2 and the transmission clutch hub No.2 incorrect orientation.

(c) Using a screwdriver, install the synchromesh shifting key to the input shaft.

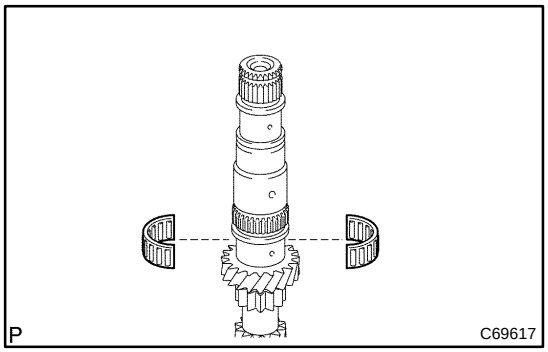

22. INSTALL 3RD GEAR NEEDLE ROLLER BEARING

(a) Coat the 3rd gear bearing with gear oil, install it to the input shaft.

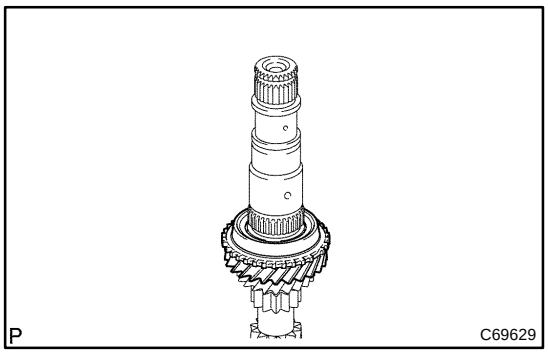

23. INSTALL 3RD GEAR

(a) Coat the 3rd gear with gear oil, install it to the input shaft.

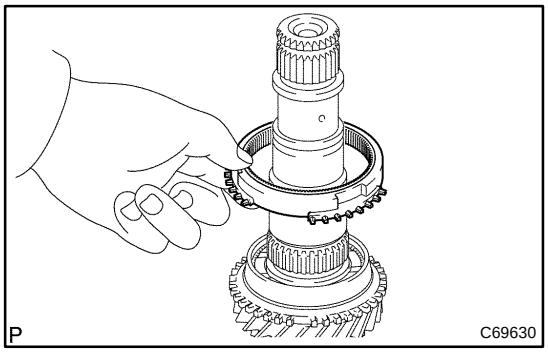

24. INSTALL SYNCHRONIZER RING NO.3

(a) Coat the synchronizer ring No.3 with gear oil, install it to the 3rd gear.

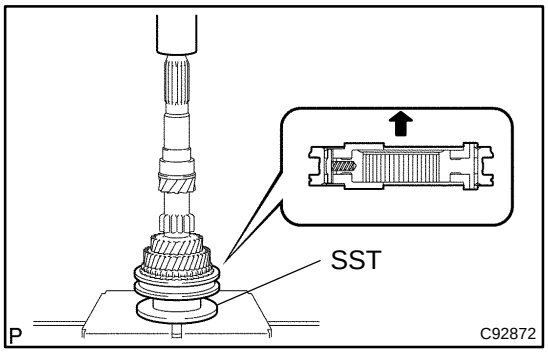

25. INSTALL TRANSMISSION CLUTCH HUB NO.2

(a) Using SST and a press, install the transmission clutch hub No.2 to the input shaft.
SST 09316–60011 (09316–00041)

NOTICE:

- **Align the claw of clutch hub No.2 with notch of synchronizer ring No.3 and install them.**
- **Make sure that the 3rd gear should rotate.**

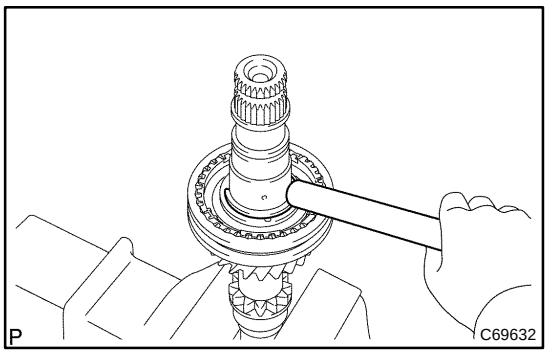

(b) Select a snap ring so that clearance between the transmission clutch hub No.2 and the clutch hub No.2 shaft snap ring will be the standard clearance. Using a brass bar and a hammer, install the snap ring.
Standard clearance: 0.1 mm or less (0.0039 or less)
Snap ring thickness

Part No.	Thickness: mm (in.)	Mark
90520–34003	2.30 – 2.35 (0.0906 – 0.0925)	H
90520–34004	2.35 – 2.40 (0.0925 – 0.0945)	J
90520–34005	2.40 – 2.45 (0.0945 – 0.0965)	K
90520–34006	2.45 – 2.50 (0.0965 – 0.0984)	L
90520–34007	2.50 – 2.55 (0.0984 – 0.1004)	M
90520–34008	2.55 – 2.60 (0.1004 – 0.1024)	N
90520–34009	2.60 – 2.65 (0.1024 –0.1043)	P

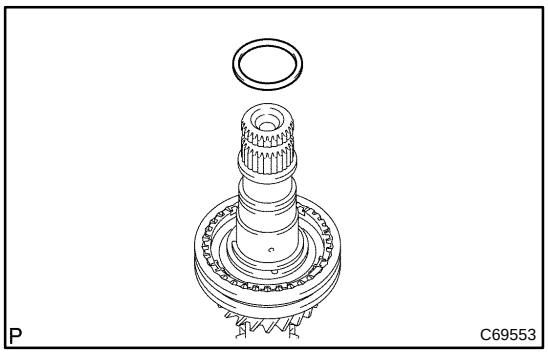

26. INSTALL 4TH GEAR BEARING SPACER

(a) Coat the 4th gear bearing spacer with gear oil, install it to the input shaft.

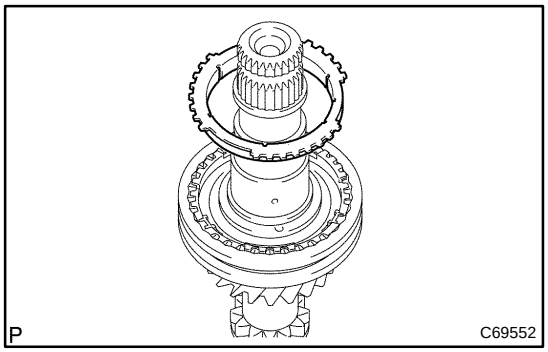

27. INSTALL 2ND SYNCHRONIZER OUTER RING

(a) Coat the 2nd synchronizer outer ring with gear oil, install it to the transmission clutch hub No.2.

NOTICE:
Align the claw of the clutch hub No.2 with the notch of the 2nd synchronizer outer ring and assemble.

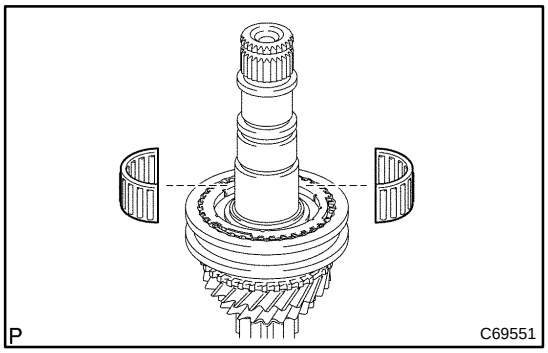

28. INSTALL 4TH GEAR NEEDLE ROLLER BEARING

(a) Coat the 4th gear needle roller bearing with gear oil, install it to the input shaft.

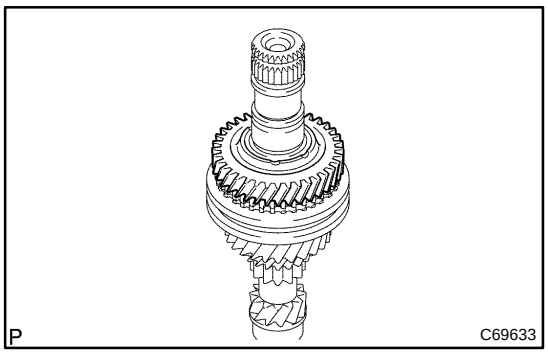

29. INSTALL 4TH GEAR

(a) Coat the 4th gear with gear oil, install it to the input shaft.

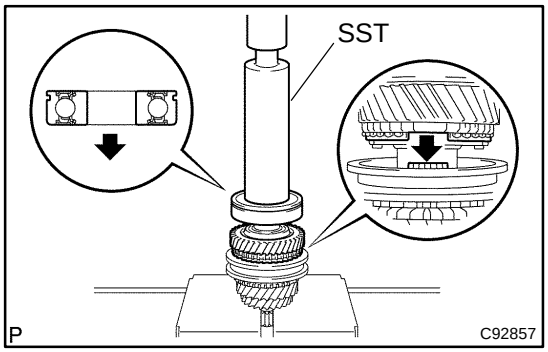

30. INSTALL INPUT SHAFT REAR RADIAL BALL BEARING

(a) Using SST and a press, install the input shaft rear radial ball bearing to the input shaft.

NOTICE:
- **Make the groove on the bearing face to the rear and install.**
- **Make sure that the 3rd gear rotates.**

SST 09608–06041

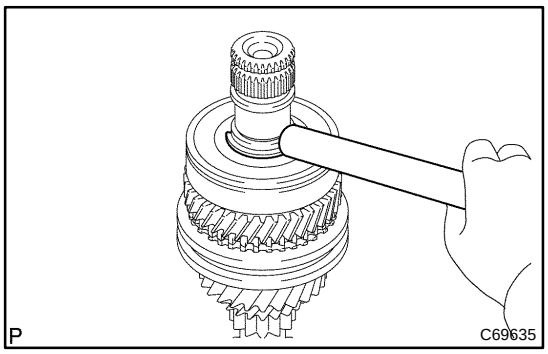

(b) Select a snap ring so that the clearance between the Input shaft radial ball rear bearing and the input shaft rear bearing snap ring will be the standard clearance. Using a brass bar and a hammer, install the snap ring.

Standard clearance: 0.1 mm or less

Snap ring

Part No.	thickness: mm (in.)	Mark
90520–30008	2.35 – 2.40 (0.0925 – 0.0945)	1
90520–30009	2.40 – 2.45 (0.0945 – 0.0965)	2
90520–30010	2.45 – 2.50 (0.0965 – 0.0984)	3
90520–30011	2.50 – 2.55 (0.0984 – 0.1004)	4
90520–30012	2.55 – 2.60 (0.1004 – 0.1024)	5
90520–30013	2.60 – 2.65 (0.1024 – 0.1043)	6
90520–30021	2.65 – 2.70 (0.1043 – 0.1063)	7
90520–30022	2.70 – 2.75 (0.1063 – 0.1083)	8

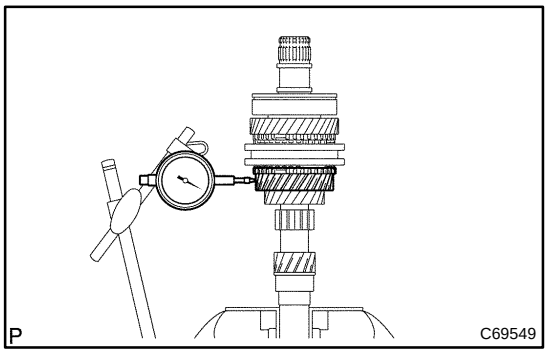

31. INSPECT 3RD GEAR RADIAL CLEARANCE

(a) Using a dial indicator, measure the 3rd gear radial clearance.

Standard clearance: mm (in.)

Bearing	Standard clearance
KOYO made	0.009 – 0.053 (0.0004 – 0.0021)
NSK made	0.009 – 0.051 (0.0004 – 0.0020)

If the clearance exceeds the maximum, replace the 3rd gear needle roller bearing.

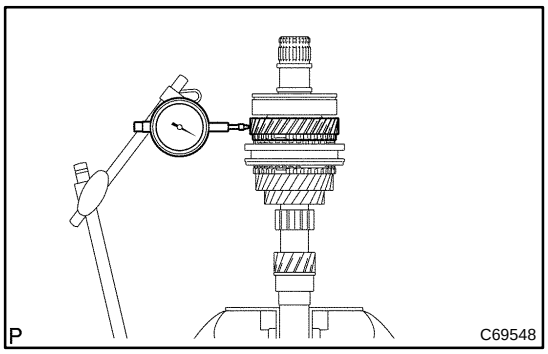

32. INSPECT 4TH GEAR RADIAL CLEARANCE

(a) Using a dial indicator, measure the 4th gear radial clearance.

Standard clearance: mm (in.)

Bearing	Standard clearance
KOYO made	0.009 – 0.053 (0.0004 – 0.0021)
NSK made	0.009 – 0.051 (0.0004 – 0.0020)

If the clearance exceeds the maximum, replace the 4th gear needle roller bearing.

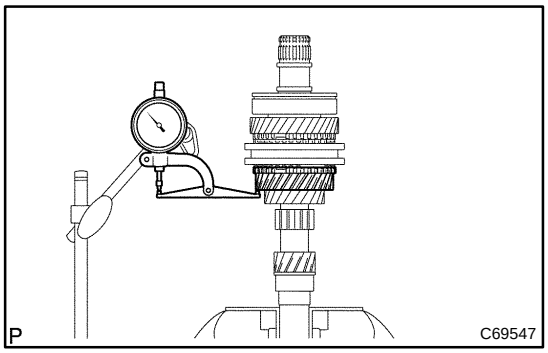

33. INSPECT 3RD GEAR THRUST CLEARANCE

(a) Using a dial indicator, measure the 3rd gear thrust clearance.

Standard clearance:
0.10 – 0.35 mm (0.0039 – 0.0138 in.)

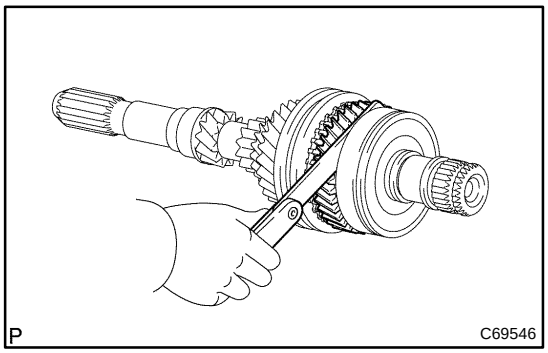

34. INSPECT 4TH GEAR THRUST CLEARANCE

(a) Using a feeler gauge, measure the 4th gear thrust clearance.

Standard clearance:
0.10 – 0.57 mm (0.0039 – 0.0224 in.)

OUTPUT SHAFT ASSY (E351)

OVERHAUL

41050–01

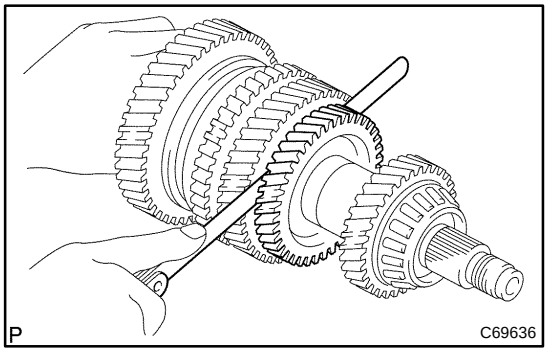

1. INSPECT 1ST GEAR THRUST CLEARANCE

(a) Using a feeler gauge, measure the 1st gear thrust clearance.

Standard clearance:
0.25 – 0.40 mm (0.0098 – 0.0157 in.)

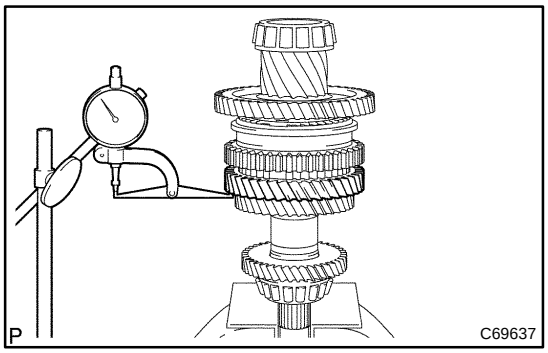

2. INSPECT 2ND GEAR THRUST CLEARANCE

(a) Using a dial indicator, measure the 2nd gear thrust clearance.

Standard clearance:
0.10 – 0.35 mm (0.0039 – 0.0138 in.)

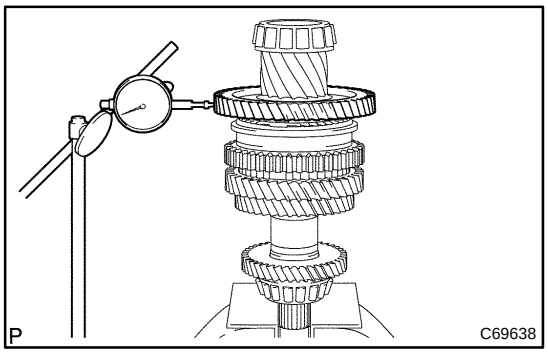

3. INSPECT 1ST GEAR RADIAL CLEARANCE

(a) Using a dial indicator, measure the 1st gear radial clearance.

Standard clearance: mm (in.)

Bearing	Standard clearance
KOYO made	0.009 – 0.053 (0.0004 – 0.0021)
NSK made	0.009 – 0.051 (0.0004 – 0.0020)

If the clearance is out of the specification, replace the 1st gear needle roller bearing.

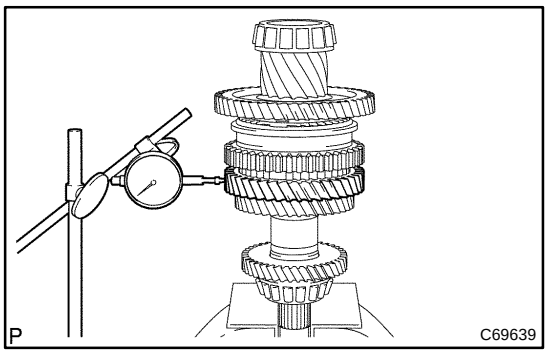

4. INSPECT 2ND GEAR RADIAL CLEARANCE

(a) Using a dial indicator, measure the 2nd gear radial clearance.

Standard clearance: mm (in.)

Bearing	Standard clearance
KOYO made	0.009 – 0.053 (0.0004 – 0.0021)
NSK made	0.009 – 0.051 (0.0004 – 0.0020)

If the clearance is out of the specification, replace the 2nd gear needle roller bearing.

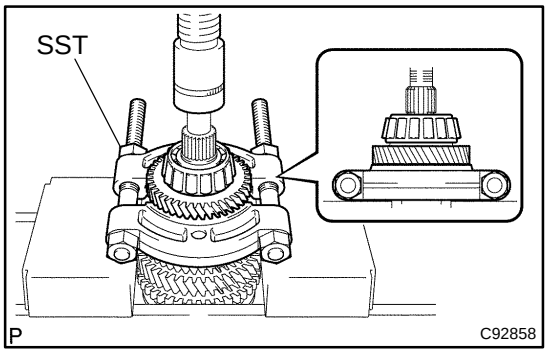

5. REMOVE 4TH DRIVEN GEAR

(a) Using SST and a press, remove the output shaft bearing rear (inner race) and 4th driven gear.
SST 09950–00020

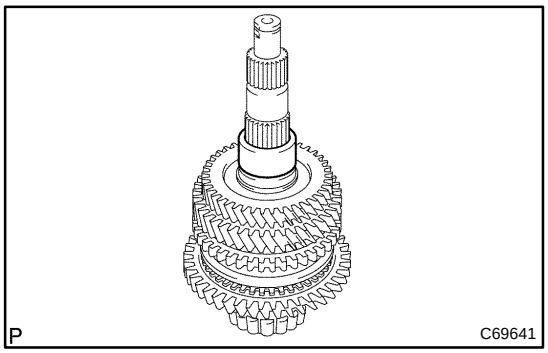

6. REMOVE OUTPUT GEAR SPACER

(a) Remove the output gear spacer from the output shaft.

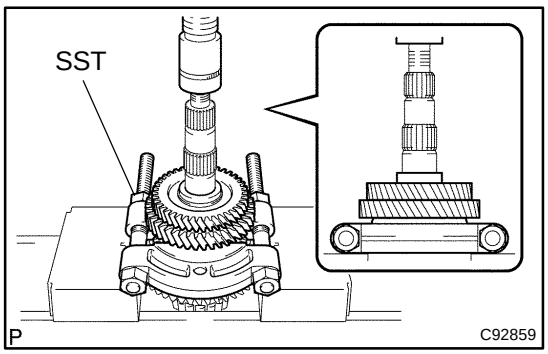

7. REMOVE 2ND GEAR

(a) Using SST and a press, remove the 3rd driven gear and 2nd gear from the out put shaft.
SST 09950–00020

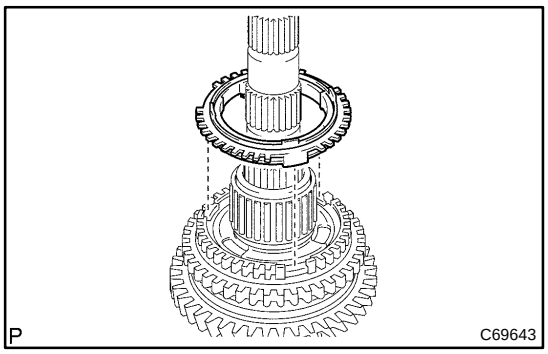

8. REMOVE SYNCHRONIZER RING SET NO.2

(a) Remove the synchronizer ring set No.2 from the transmission clutch hub No.1.

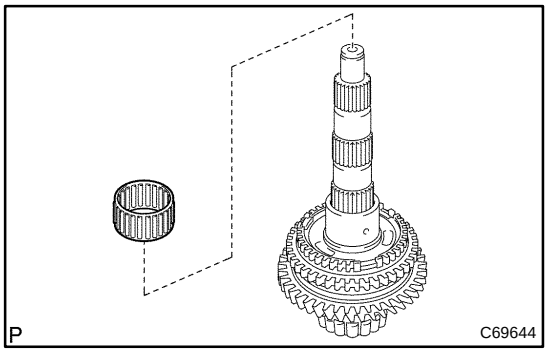

9. REMOVE 2ND GEAR NEEDLE ROLLER BEARING

(a) Remove the 2nd gear needle roller bearing from the output shaft.

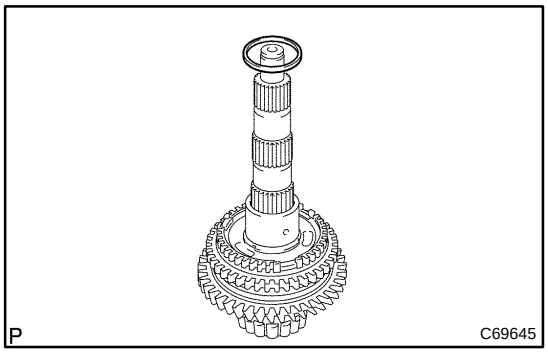

10. REMOVE 2ND GEAR BEARING SPACER

(a) Remove the 2nd gear bearing spacer from the output shaft.

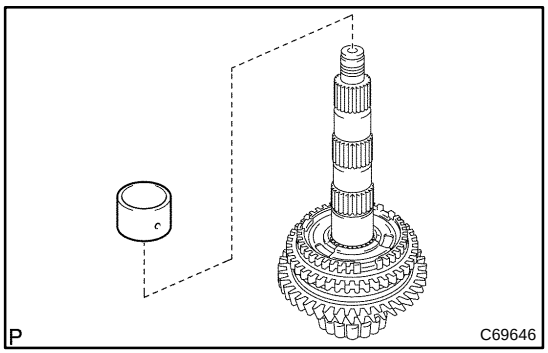

11. REMOVE 2ND GEAR BUSH

(a) Remove the 2nd gear bush from the output shaft.

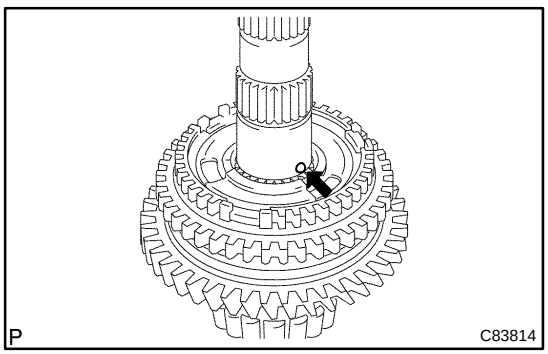

12. REMOVE 2ND GEAR BUSH BALL

(a) Using a magnetic finger, remove the 2nd gear bush ball from the output shaft.

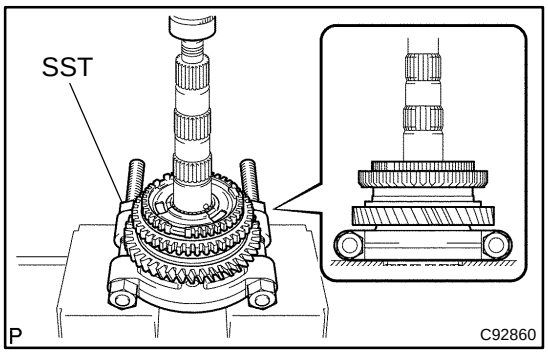

13. REMOVE 1ST GEAR

(a) Using SST and a press, remove the transmission clutch hub No.1 and 1st gear from the output shaft.
SST 09950–00020

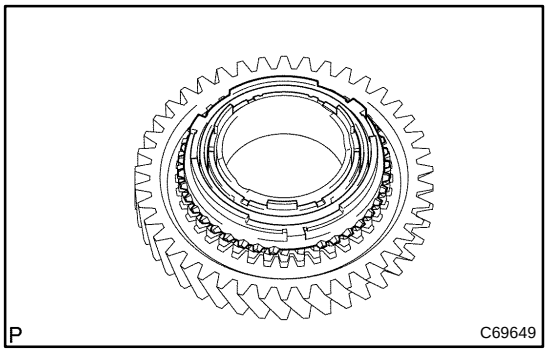

14. REMOVE SYNCHRONIZER RING SET NO.1

(a) Remove the synchronizer ring set No.1 from the 1st gear.

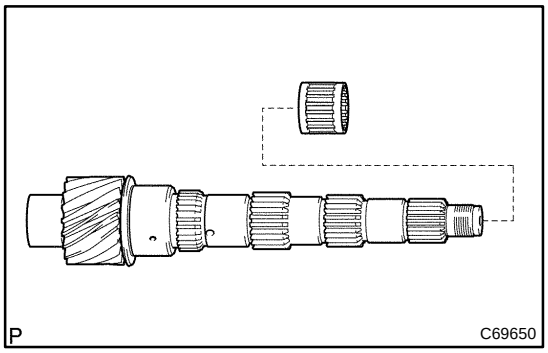

15. REMOVE 1ST GEAR NEEDLE ROLLER BEARING

(a) Remove the 1st gear needle roller bearing from the output shaft.

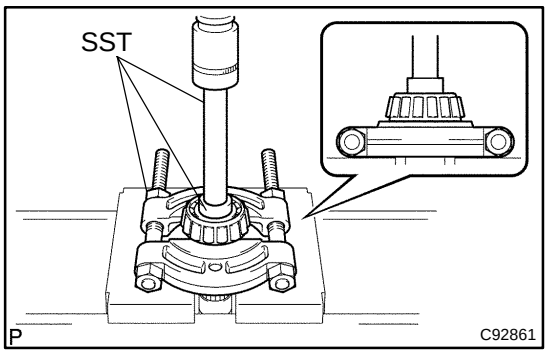

16. REMOVE OUTPUT SHAFT FRONT BEARING

(a) Using SST and a press, remove the output shaft front bearing (inner race) from the output shaft.
SST 09950–00020, 09950–60010 (09951–00320), 09950–70010 (09951–07150)

NOTICE:
Do not tighten SST excessively.

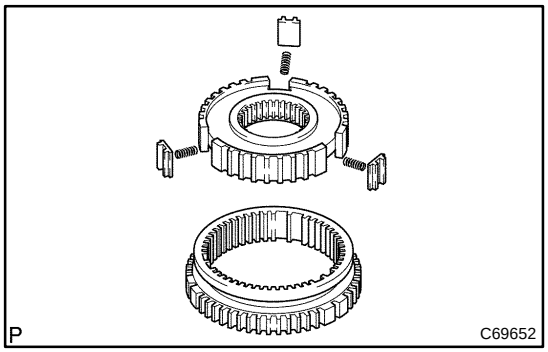

17. REMOVE REVERSE GEAR

(a) Remove the reverse gear, 3 synchromesh shifting keys and 3 synchromesh shifting key springs from the transmission clutch hub No.1.

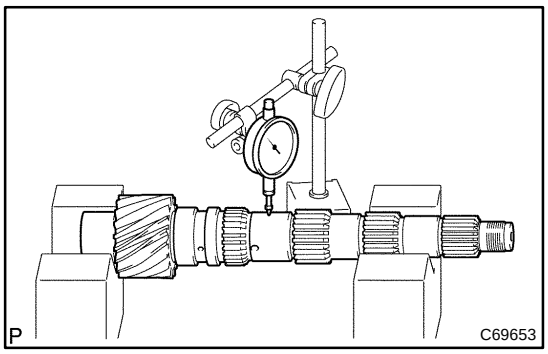

18. INSPECT OUTPUT SHAFT

(a) Using V–block and a dial indicator, measure the shaft run out.

Maximum run out: 0.03 mm (0.0012 in.)

If the run out exceeds the maximum, replace the input shaft.

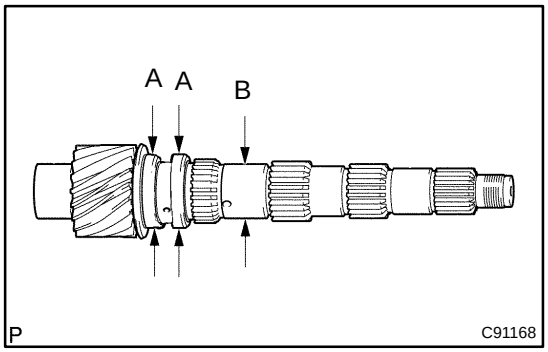

(b) Using a micrometer, measure the outer diameter of the output shaft journal surface.

Outer diameter: mm (in.)

Part	Standard outer diameter	minimum outer diameter
A	37.610 – 37.626 (1.4807 – 1.4813)	37.610 (1.4807)
B	34.802 – 34.512 (1.3702 – 1.3587)	34.802 (1.3702)

If the outer diameter is less than the minimum, replace the input shaft.

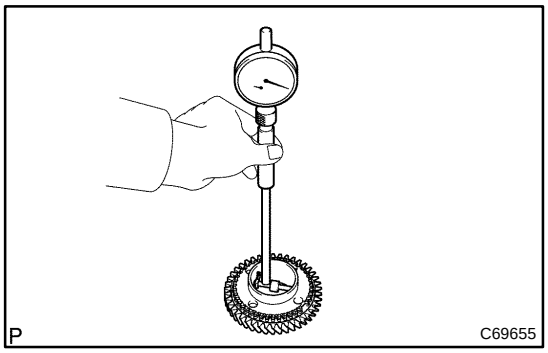

19. INSPECT 2ND GEAR

(a) Using a cylinder gauge, measure the inside diameter of the 2nd gear.

Inside diameter: mm (in.)

Standard inside diameter	Maximum inside diameter
50.009 – 50.025 (1.9689 – 1.9695)	50.025 (1.9695)

If the inside diameter exceeds the maximum, replace the 2nd gear.

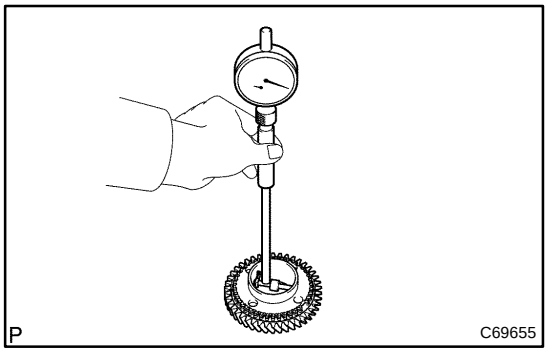

20. INSPECT 1ST GEAR

(a) Using a cylinder gauge, measure the inside diameter of the 1st gear.

Inside diameter: mm (in.)

Standard inside diameter	Maximum inside diameter
51.009 – 51.025 (2.0082 – 2.0089)	51.025 (2.0089)

If the inside diameter exceeds the maximum, replace the 1st gear.

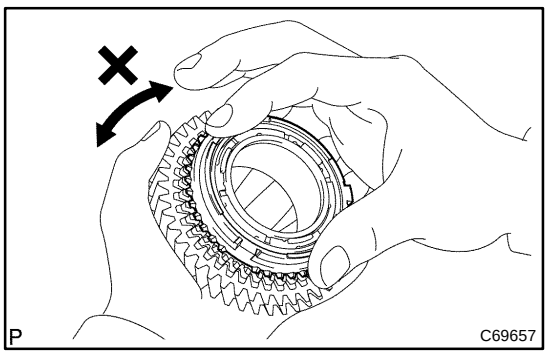

21. INSPECT SYNCHRONIZER RING SET NO.2

(a) Coat the cone of the 2nd gear with gear oil, check that it does not turn in the both circumference directions while pushing it to the synchronizer ring No.2.

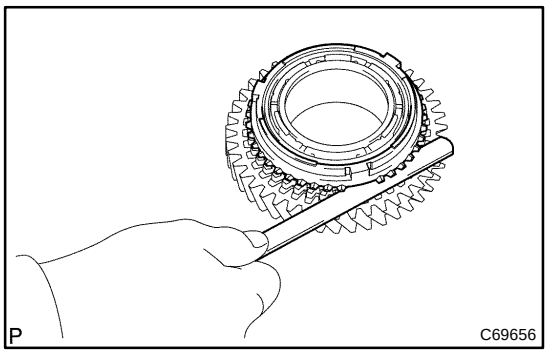

(b) Check the clearance between the synchronizer ring No.2 and 2nd gear while pushing it to the synchronizer ring No.2.

Standard clearance:

0.70 – 1.45 mm (0.0276 – 0.0571 in.)

If the standard clearance is out of the specification, replace the synchronizer ring set No.2 with a new one.

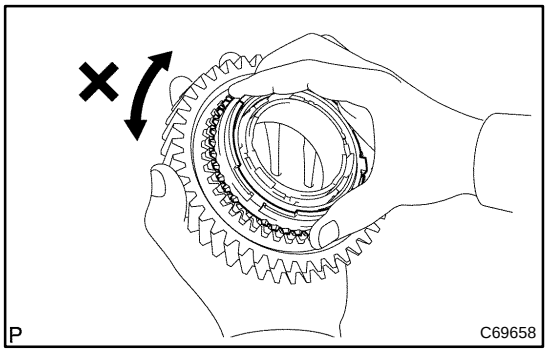

22. INSPECT SYNCHRONIZER RING SET NO.1

(a) Coat the 1st gear cone with gear oil. Turn the synchronizer ring set No.1. in one direction while pushing it to the 1st gear cone. Check that the ring locks.

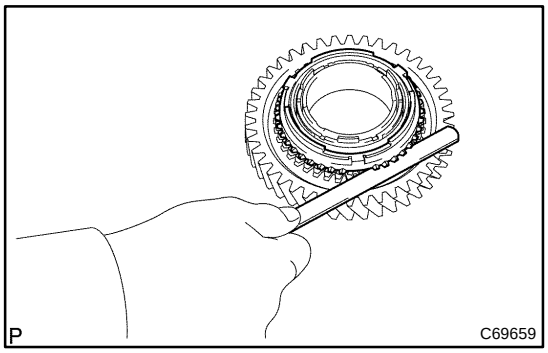

(b) Check the clearance between the synchronizer ring set No.1 and 1st gear while pushing it to the cone of synchronizer ring set No.1.

Standard clearance:

0.70 – 1.45 mm (0.0276 – 0.0571 in.)

If the standard clearance is out of the specification, replace the synchronizer ring set No.1 with a new one.

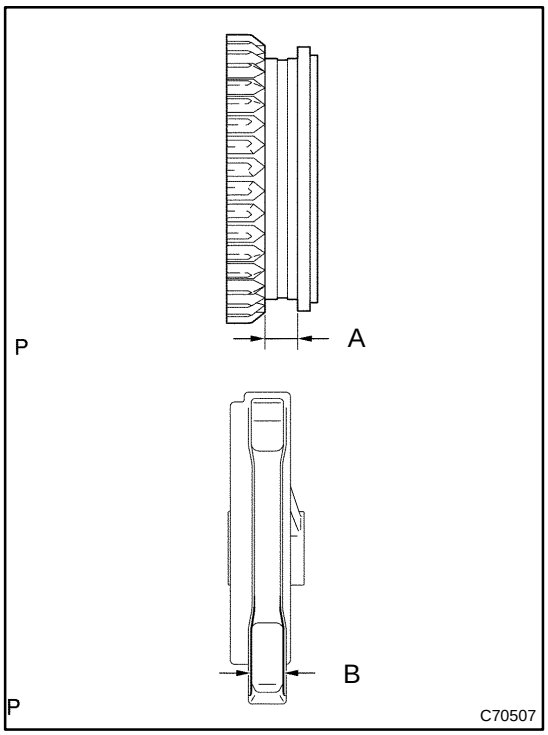

23. INSPECT REVERSE GEAR

(a) Using a vernier calipers, measure the reverse gear groove and thickness of the claw part on gear shift fork No.1, and calculate

Standard clearance:

0.15 – 0.35 mm (0.0059 – 0.0138 in.) {A – B}

If the clearance is out of the specification, replace the reverse gear and gear shift fork No.1 with the new one.

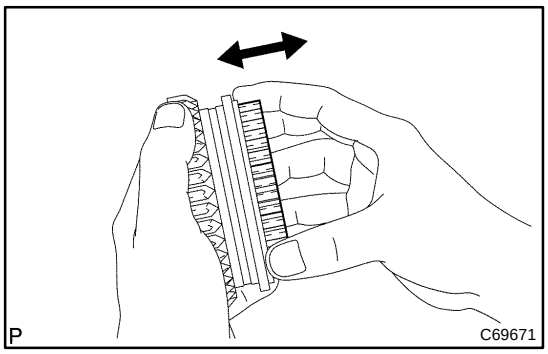

24. INSPECT TRANSMISSION CLUTCH HUB NO.1

(a) Check the sliding condition between the transmission clutch hub No.1 and reverse gear.
(b) Check the tip of spline gear on the sleeve of reverse gear for wear.

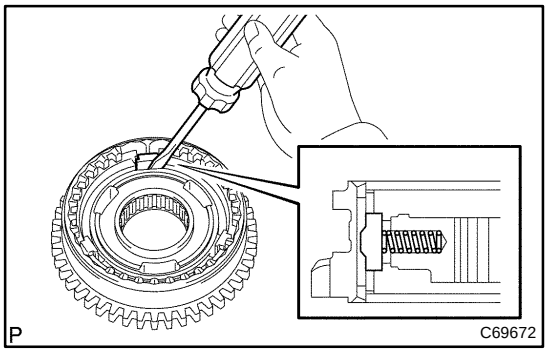

25. INSTALL REVERSE GEAR

(a) Coat the reverse gear with gear oil.
(b) Install the 3 synchromesh shifting key spring No.1 and transmission clutch hub No.1 to the reverse gear.

NOTICE:
Do not set the reverse gear and the transmission clutch hub No.1 in the incorrect direction.

(c) Using a screwdriver, install the synchromesh sifting key No.1 to the reverse gear.

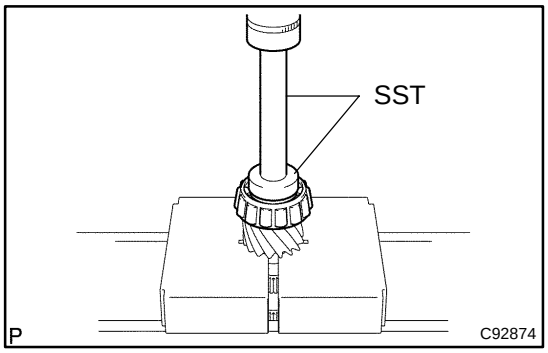

26. INSTALL OUTPUT SHAFT FRONT BEARING

(a) Using SST and a press, install the output shaft front bearing (inner race) to the output shaft.
SST 09950–60010 (09951–00430), 09950–70010 (09951–07150)

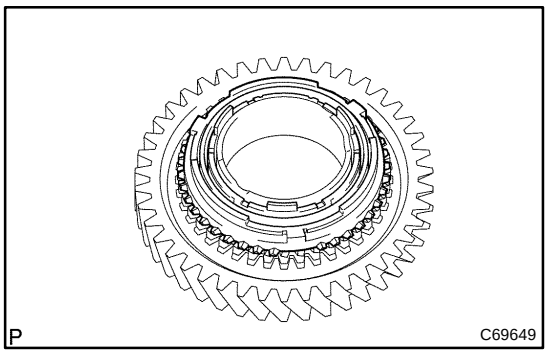

27. INSTALL SYNCHRONIZER RING SET NO.1

(a) Coat the synchronizer ring set No.1 with gear oil, install it to the 1st gear.

NOTICE:
Align the synchronizer ring set No.1 with the hole of 1st gear and install.

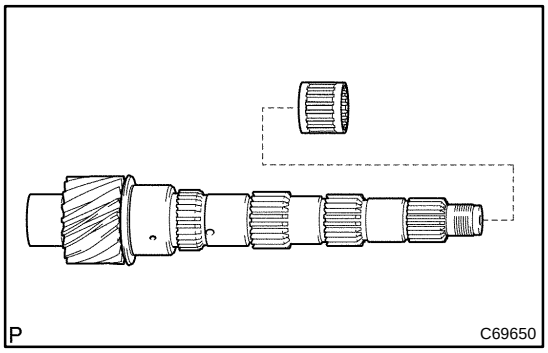

28. INSTALL 1ST GEAR NEEDLE ROLLER BEARING

(a) Coat the 1st gear needle roller bearing with gear oil, install it to the output shaft.

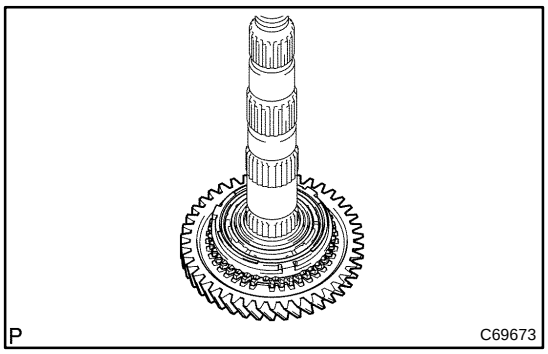

29. INSTALL 1ST GEAR

(a) Coat the 1st gear with gear oil, install it to the output shaft.

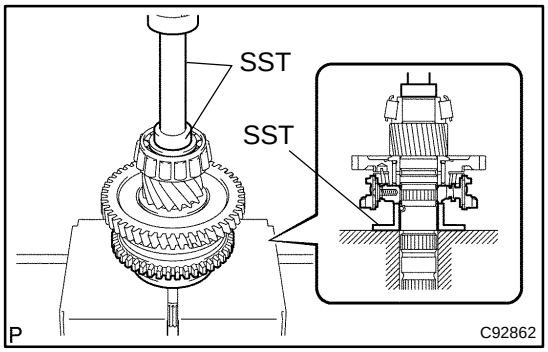

30. INSTALL TRANSMISSION CLUTCH HUB NO.1

(a) Using SST and a press, install transmission clutch hub No.1 to the output shaft.
SST 09316–60011 (09316–00031), 09950–60010 (09951–00320), 09950–70010 (09951–07100)

NOTICE:
- **Align the synchronizer ring No.1 with synchromesh shifting key No.1 and install.**
- **Make sure that the 1st gear rotates.**

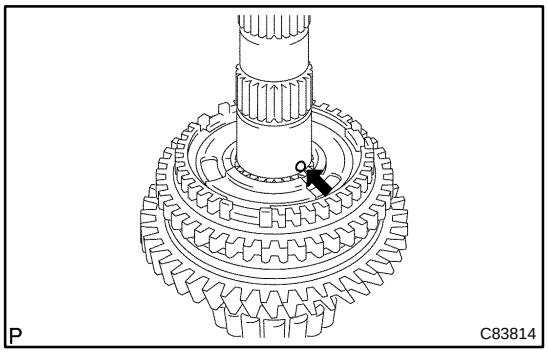

31. INSTALL 2ND GEAR BUSH BALL

(a) Coat the gear bush with MP grease, install it to the output shaft.

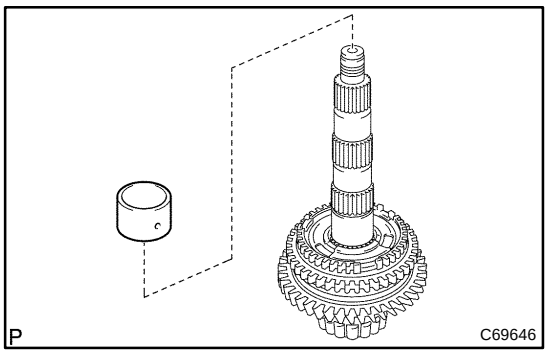

32. INSTALL 2ND GEAR BUSH

(a) Coat the 2nd gear bush with gear oil, install it to the output shaft.

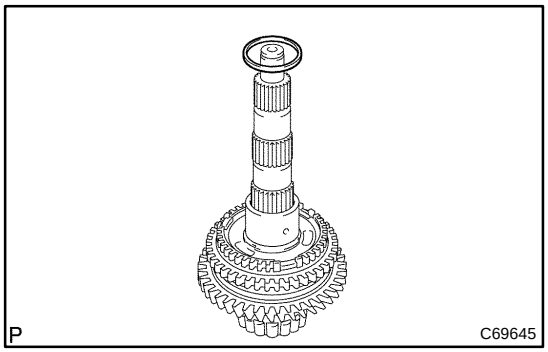

33. INSTALL 2ND GEAR BEARING SPACER

(a) Coat the 2nd gear bearing spacer with gear oil, install it to the output shaft.

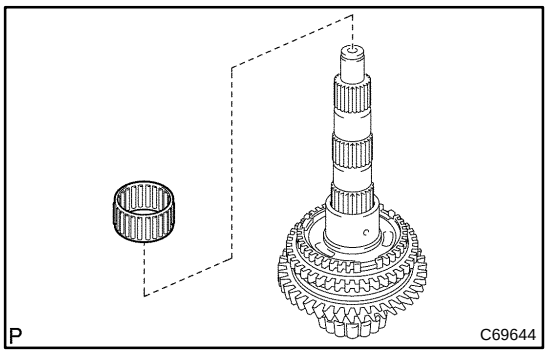

34. INSTALL 2ND GEAR NEEDLE ROLLER BEARING

(a) Coat the 2nd gear needle roller bearing with gear oil, install it to the output shaft.

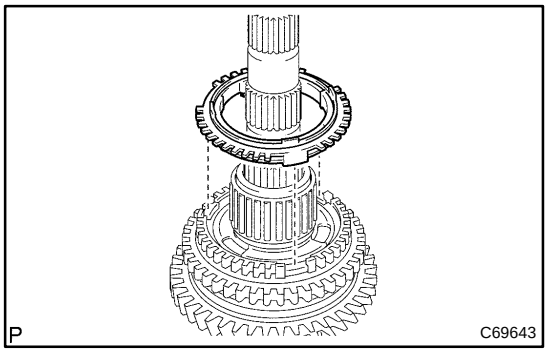

35. INSTALL SYNCHRONIZER RING SET NO.2

(a) Coat the synchronizer ring set No.2 with gear oil, install it to the transmission clutch hub No.1

NOTICE:
Align the key groove on the synchronizer ring set No.2 with the synchromesh shifting key No.1.

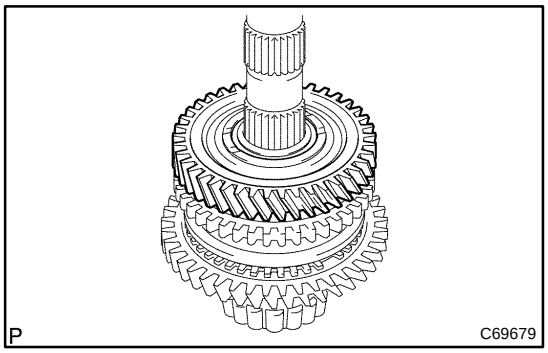

36. INSTALL 2ND GEAR

(a) Coat the 2nd gear with gear oil, install it to the output shaft.

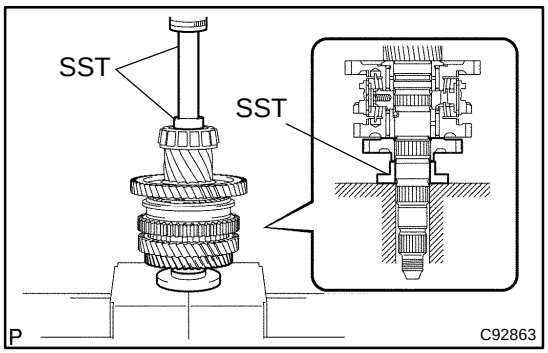

37. INSTALL 3RD DRIVEN GEAR

(a) Using SST and a press, install the 3rd driven gear to the output shaft.
SST 09608–00071, 09950–60010 (09951–00320), 09950–70010 (09951–07100)

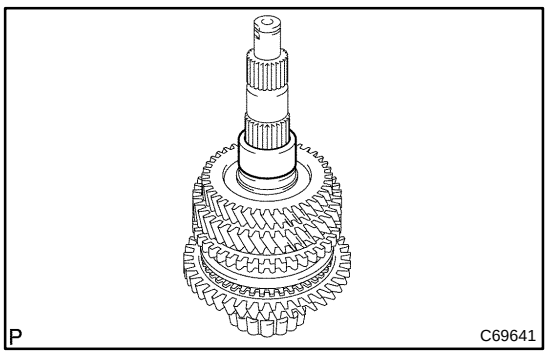

38. INSTALL OUTPUT GEAR SPACER

(a) Install the output gear spacer to the output shaft.

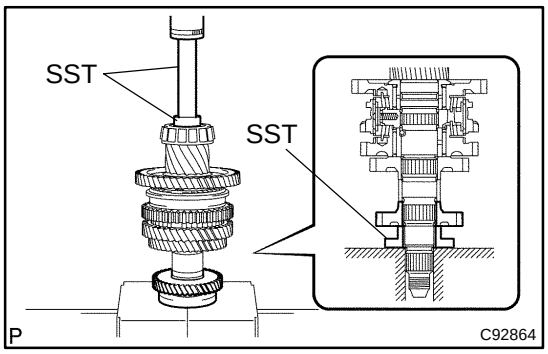

39. INSTALL 4TH DRIVEN GEAR

(a) Using SST and a press, install the 4th driven gear to the output shaft.
SST 09608–00071, 09950–60010 (09951–00320), 09950–70010 (09951–07100)

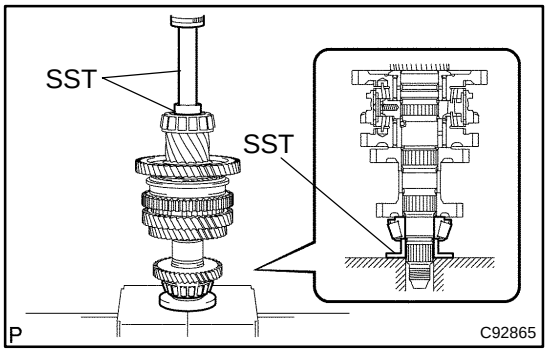

40. INSTALL OUTPUT SHAFT FRONT BEARING

(a) Using SST and a press, install the output shaft front bearing (inner race) to the output shaft.
SST 09506–30012, 09950–60010 (09951–00320), 09950–70010 (09951–07100)

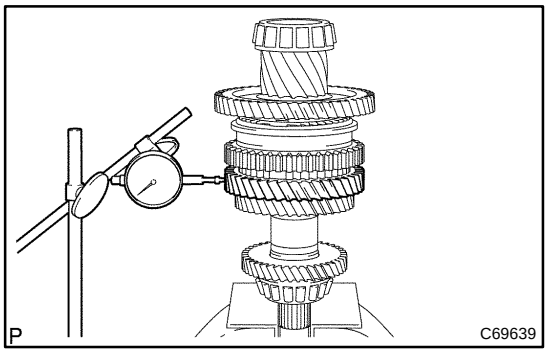

41. INSPECT 2ND GEAR RADIAL CLEARANCE

(a) Using a dial indicator, measure the 2nd gear radial clearance.
Standard clearance: mm (in.)

Bearing	Standard clearance
KOYO made	0.009 – 0.053 (0.0004 – 0.0021)
NSK made	0.009 – 0.051 (0.0004 – 0.0020)

If the clearance is out of the specification, replace the 2nd gear needle roller bearing.

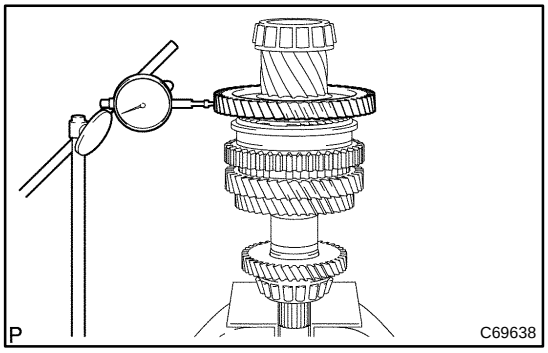

42. INSPECT 1ST GEAR RADIAL CLEARANCE

(a) Using a dial indicator, measure the 1st gear radial clearance.
Standard clearance: mm (in.)

Bearing	Standard clearance
KOYO made	0.009 – 0.053 (0.0004 – 0.0021)
NSK made	0.009 – 0.051 (0.0004 – 0.0020)

If the clearance is out of the specification, replace the 1st gear needle roller bearing.

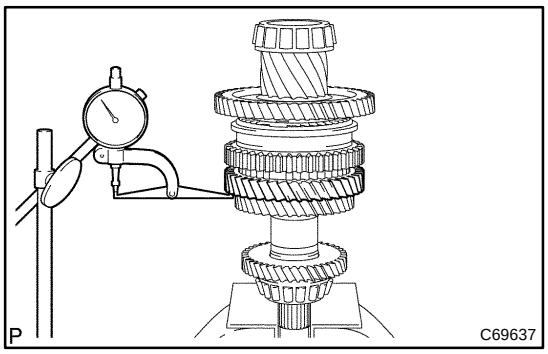

43. INSPECT 2ND GEAR THRUST CLEARANCE

(a) Using a dial indicator, measure the 2nd gear thrust clearance.

Standard clearance:
0.10 – 0.35 mm (0.0039 – 0.0138 in.)

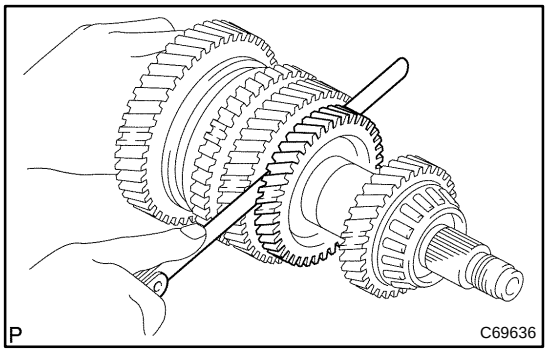

44. INSPECT 1ST GEAR THRUST CLEARANCE

(a) Using a feeler gauge, measure the 1st gear thrust clearance.

Standard clearance:
0.25 – 0.40 mm (0.0098 in. – 0.0157 in.)

SHIFT & SELECT LEVER SHAFT ASSY (E351)

OVERHAUL

4104Y–01

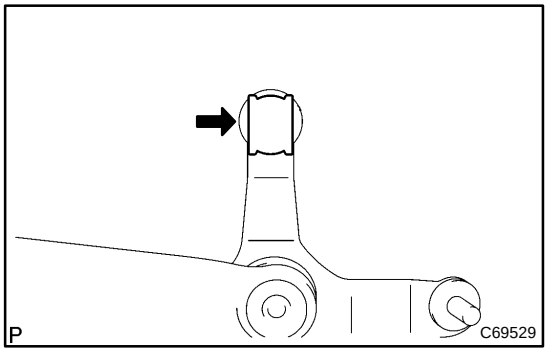

1. REMOVE CONTROL SHIFT LEVER BUSH

(a) Remove the control shift lever bush from the selecting bellcrank No.2.

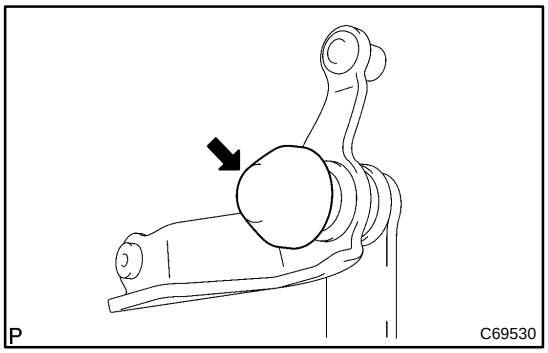

2. REMOVE SELECTING BELLCRANK DUST COVER NO.1

(a) Remove the selecting bellcrank dust cover No.1 from the selecting bellcrank No.2.

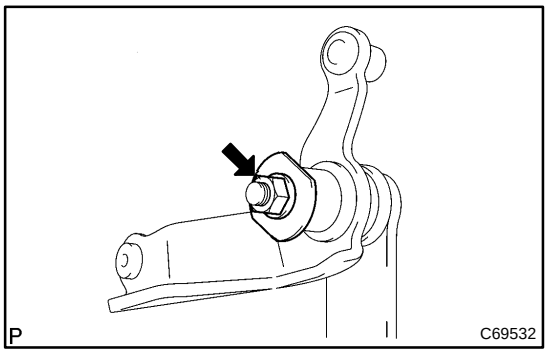

3. REMOVE SELECTING BELLCRANK SUPPORT SUB–ASSY

(a) Remove the nut, washer and selecting bellcrank No.2 plate washer from the selecting bellcrank No.2.

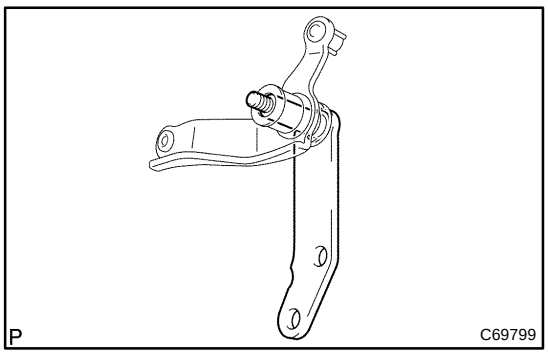

(b) Remove the selecting bellcrank support sub–assy from the selecting bell crank No.2.

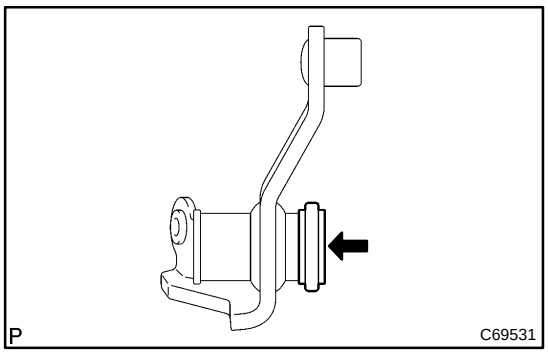

4. REMOVE SELECTING BELLCRANK DUST COVER NO.2

(a) Remove the selecting bell crank dust cover No.2 from the selecting bellcrank No.2.

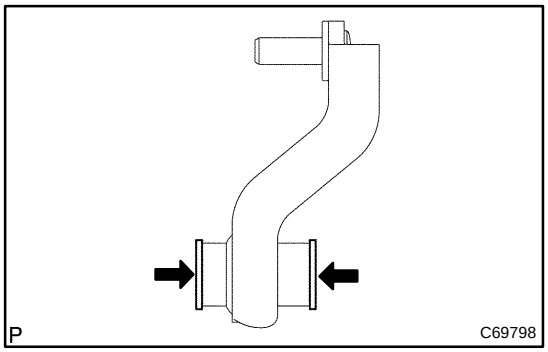

5. REMOVE SELECTING BELLCRANK NO.2 BUSH

(a) Remove the selecting bellcrank bush from the selecting bellcrank No.2.

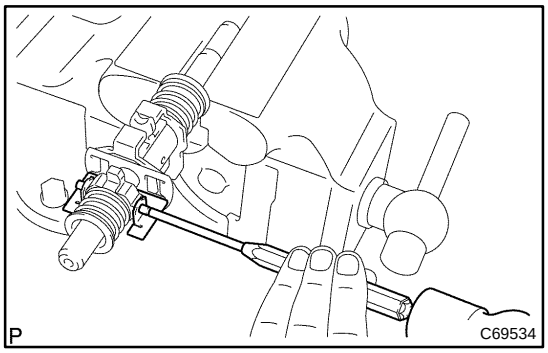

6. REMOVE SHIFT LEVER INNER NO.2

(a) Hold the shift & select lever on the vise through the soft jaw.

NOTICE:

Do not damage the shift & select lever shaft.

(b) Using a pin punch (ϕ 5 mm), remove the shift & select lever inner slotted pin and oil baffle.

NOTICE:

Do not damage the shift & select lever shaft.

(c) Apply the force to the select return spring No.1 and select return spring No.2 then hold it on the vise through the soft jaw.

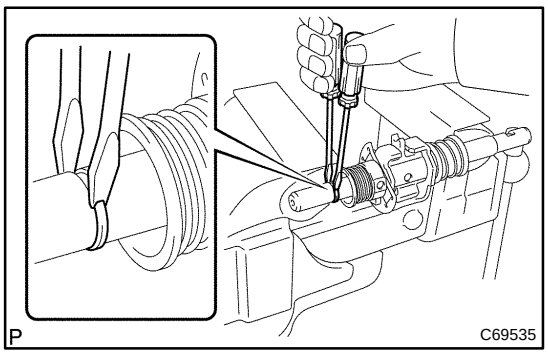

(d) Using 2 screwdrivers and a hammer, remove the select seat snap ring from the shift & select lever shaft.

NOTICE:

Do not damage the shift & select lever shaft.

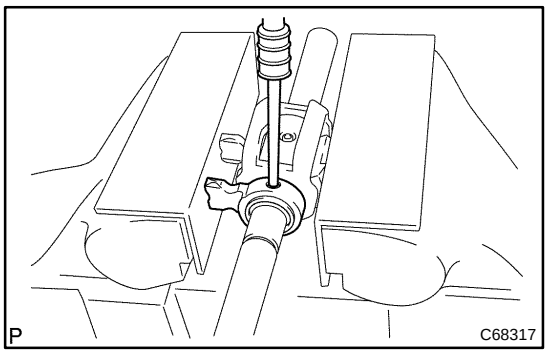

7. REMOVE SELECT SPRING SEAT NO.1

(a) Using a pin punch (ϕ 5 mm), remove the shift inner lever slotted pin from the shift & select lever shaft.

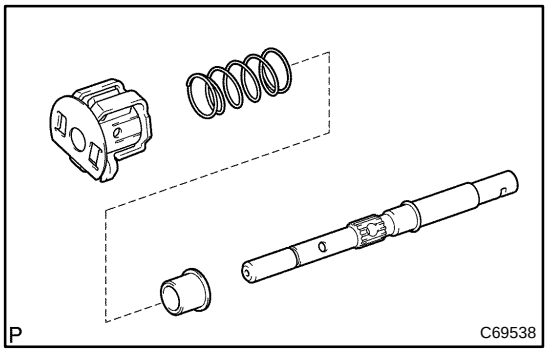

(b) Remove the shift lever assy select return spring No.1 and select spring seat from the shift & select lever shaft.

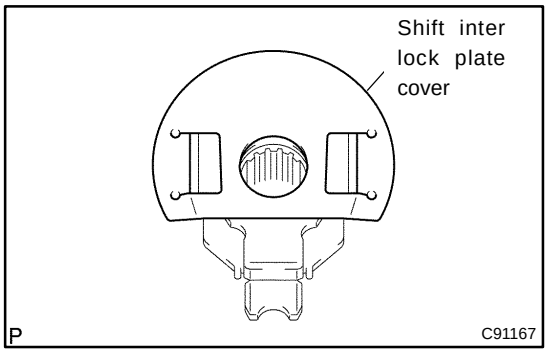

8. REMOVE SHIFT INTER LOCK PLATE COVER

(a) Remove the shift inter lock plate cover from the shift inter lock plate.

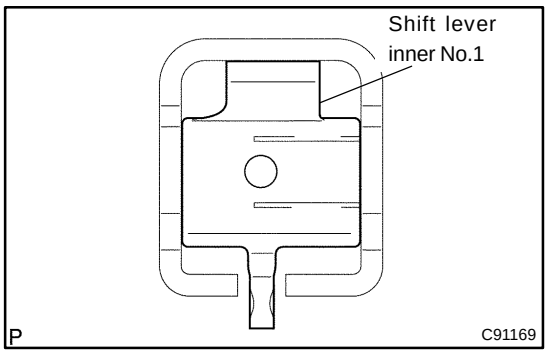

9. REMOVE SHIFT LEVER INNER NO.1

(a) Remove the shift lever inner No.1 from the shift inter lock plate.

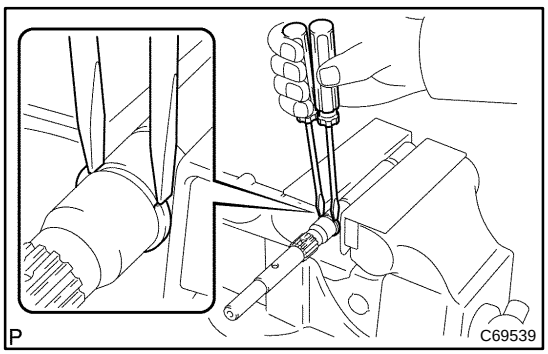

10. REMOVE SELECT SPRING NO.1 SEAT SHAFT SNAP RING

(a) Using 2 screwdrivers and a hammer, remove the select spring No.1 seat shaft snap ring.

NOTICE:
Do not damage the shaft.

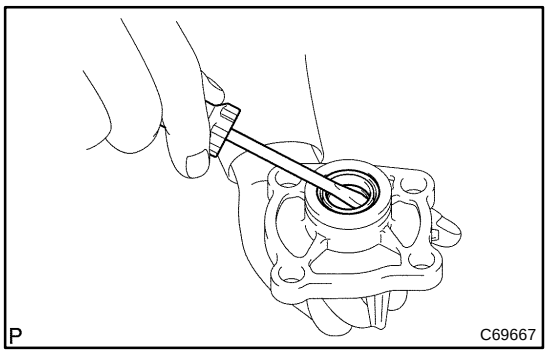

11. REMOVE CONTROL SHAFT COVER OIL SEAL

(a) Using a screwdriver, remove the control shaft cover oil seal from the control shaft cover.

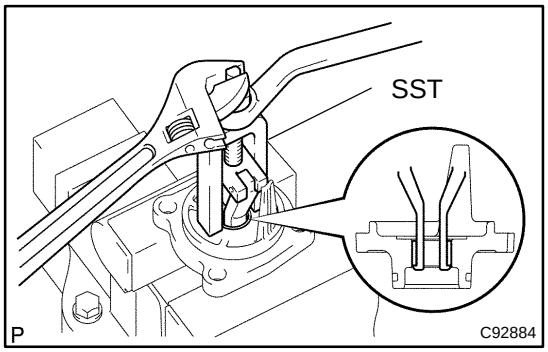

12. REMOVE CONTROL SHAFT COVER BIMETAL FORMED BUSH

(a) Using SST, remove the control shaft cover bimetal formed bush from the control shift cover.
SST 09319–60020

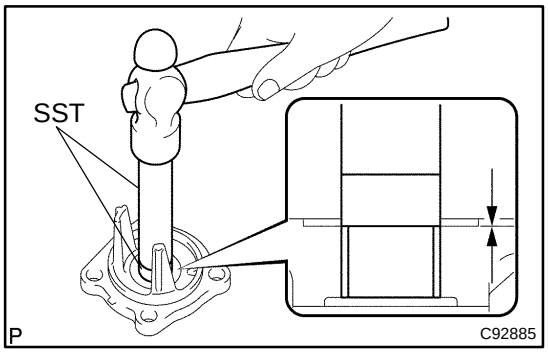

13. INSTALL CONTROL SHAFT COVER BIMETAL FORMED BUSH

(a) Using SST and hammer, install a new control shaft cover bimetal formed bush to the control shaft cover.
SST 09950–60010 (09951–00210), 09950–70010 (09951–07100)
Oil seal drive in depth:
0 ± 0.25 mm (0 ± 0.010 in.)

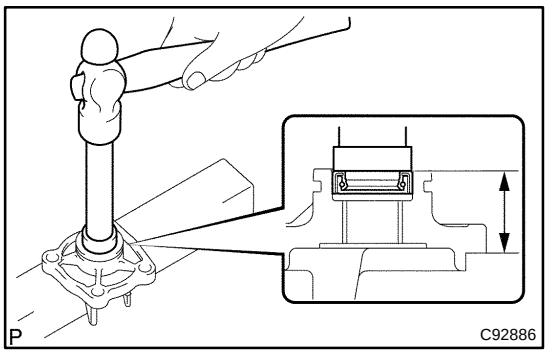

14. INSTALL CONTROL SHAFT COVER OIL SEAL

(a) Using SST and hammer, install a new control shaft cover oil seal to the control shaft cover.
SST 09950–60010 (09951–00280), 09950–70010 (09951–07100)
Oil seal drive in depth:
28.5 ± 0.50 mm (1.122 ± 0.020 in.)

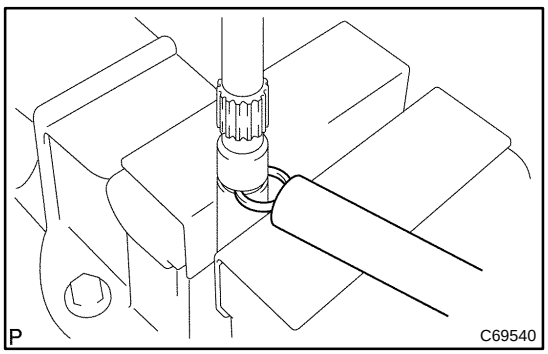

15. INSTALL SELECT SPRING NO.1 SEAT SHAFT SNAP RING

(a) Using a brass bar and a hammer, install the select spring No.1 seat shaft snap ring.

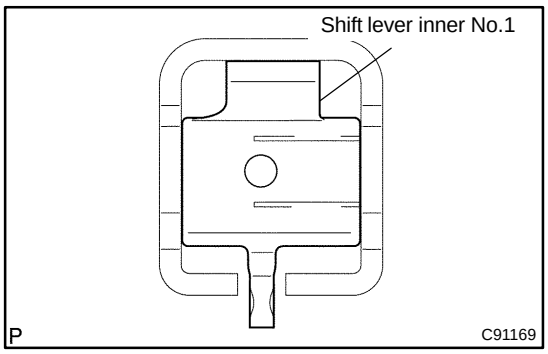

16. INSTALL SHIFT LEVER INNER NO.1

(a) Install the shift lever inner No.1 to the shift inter lock plate.

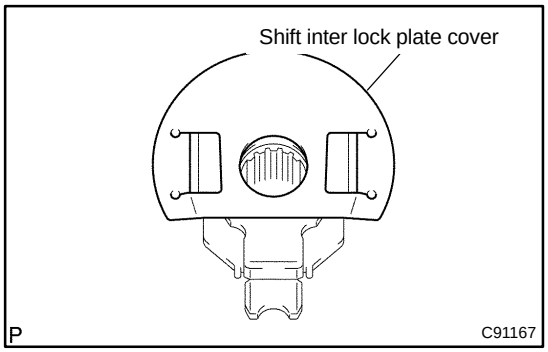

17. INSTALL SHIFT INTER LOCK PLATE COVER

(a) Install the shift inter lock plate cover to the shift inter lock plate.

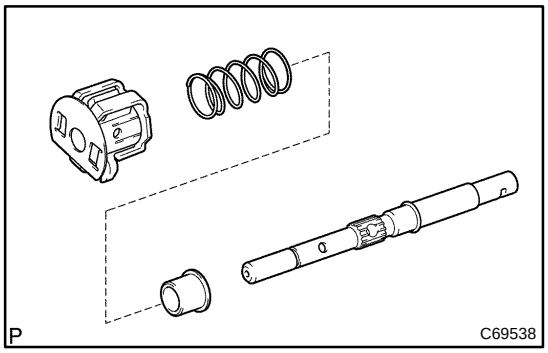

18. INSTALL SELECT SPRING SEAT NO.1

(a) Install the select spring seat No.1, select return spring No.1 and shift lever inner assy to the shift & select lever shaft.

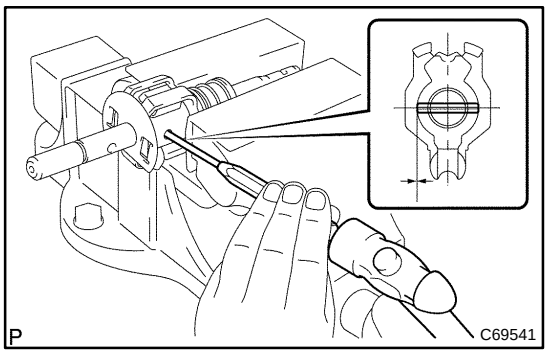

(b) Hold the shift & select lever on the vise through the soft jaw.

(c) Using a pin punch (ϕ 5 mm), install the shift lever slotted pin to the shift & select lever shaft.
Clearance: –0.5 – 0.5 mm (– 0.0197 – 0.0197 in.)

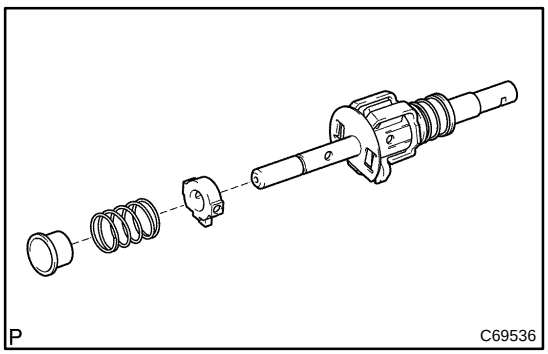

19. INSTALL SHIFT LEVER INNER NO.2

(a) Install shift lever inner No.2, select return spring No.2 and select return spring seat No.2 to the shift & select lever shaft.

(b) Using a brass bar and a hammer, install the select seat snap ring to the shift & select lever shaft.

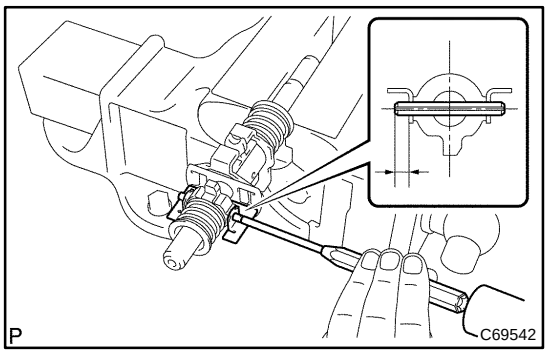

(c) Install the transmission oil baffle. Using a pin punch (ϕ 5 mm) and a hammer, install the shift inner lever slotted pin to the shift & select lever shaft.
Clearance: 5.8 – 6.8 mm (0.228 – 0.268 in.)

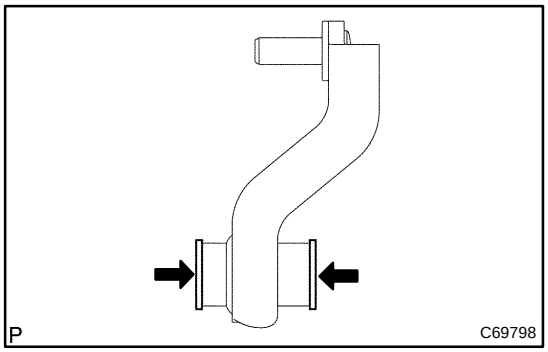

20. INSTALL SELECTING BELLCRANK NO.2 BUSH

(a) Coat the 2 selecting bellcrank No.2 bushes with MP grease, install it to the selecting bellcrank No.2.

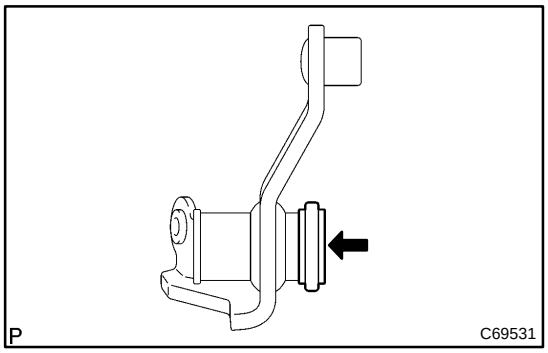

21. INSTALL SELECTING BELLCRANK DUST COVER NO.2

(a) Coat the selecting bellcrank dust cover No.2 with MP grease, install it to the selecting bellcrank No.2.

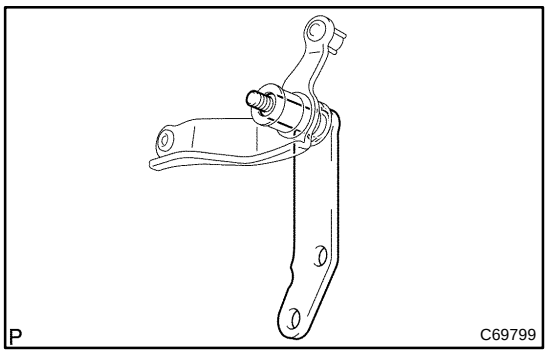

22. INSTALL SELECTING BELLCRANK SUPPORT SUB–ASSY

(a) Install the selecting bellcrank support sub–assy to the selecting bellcrank No.2.

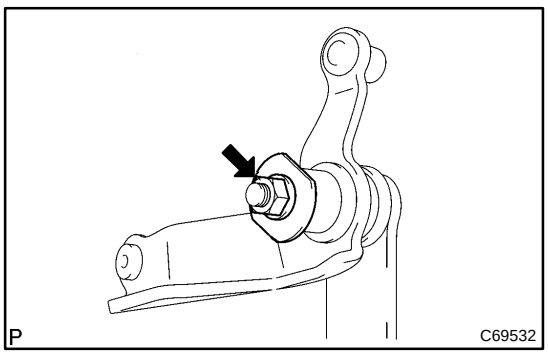

(b) Install the selecting bellcrank No.2 plate washer, washer and nut.
Torque: 12 N·m (122 kgf·cm, 9 ft·lbf)

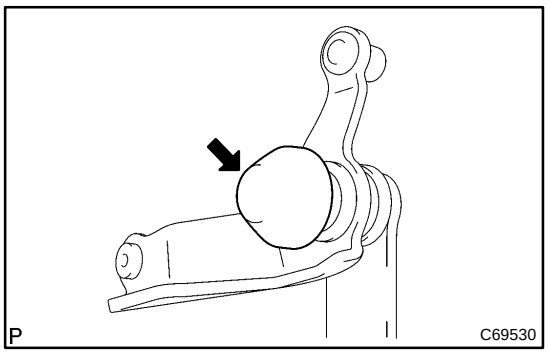

23. INSTALL SELECTING BELLCRANK DUST COVER NO.1

(a) Install the selecting bellcrank dust cover No.1 to the selecting bellcrank No.2.

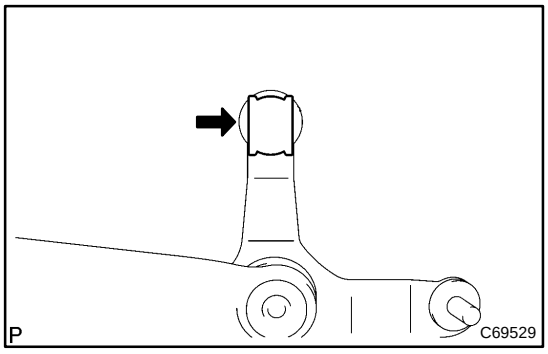

24. INSTALL CONTROL SHIFT LEVER BUSH

(a) Install the control shift lever bush to the selecting bell crank No.2.

DIFFERENTIAL CASE ASSY (E351)

OVERHAUL

4104X–01

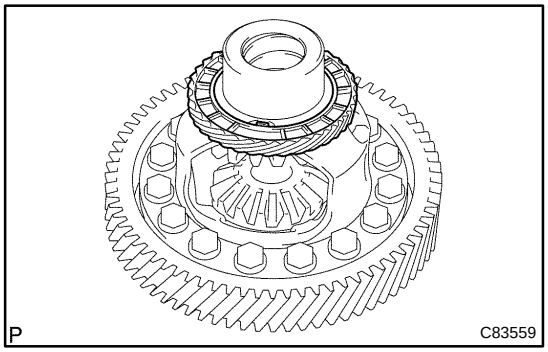

1. REMOVE SPEEDOMETER DRIVE (MTM) GEAR

(a) Remove the speedometer drive (MTM) gear from front differential case assy.

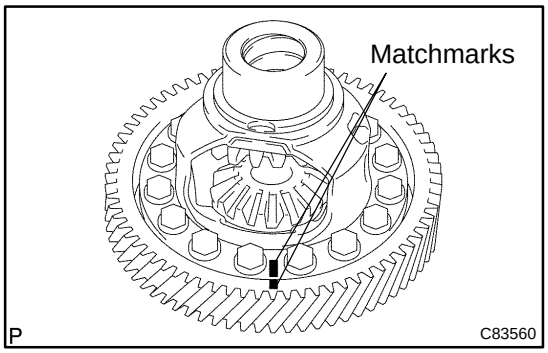

2. REMOVE FRONT DIFFERENTIAL RING GEAR

(a) Place machmarks on the front differential ring gear and from the front differential case.

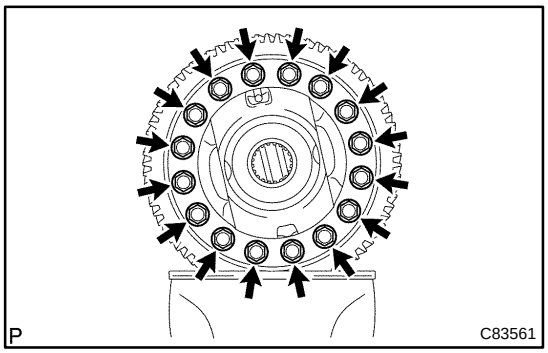

(b) Remove the 16 bolts. Using a plastic hammer, remove the front differential case.

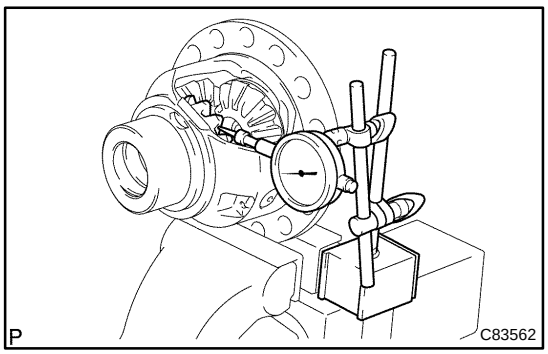

3. INSPECT FRONT DIFFERENTIAL SIDE GEAR BACKLASH

(a) Fixing the front differential pinion to the front differential case side. Using a dial indicator, measure the front differential side gear backlash.

Standard backlash:
0.05 – 0.20 mm (0.0020 – 0.0079 in.)

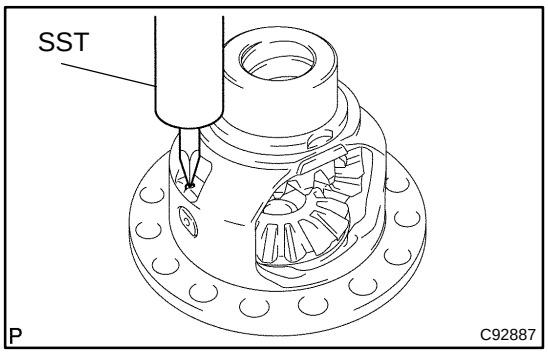

4. REMOVE FRONT DIFFERENTIAL PINION SHAFT STRAIGHT PIN

(a) Using SST and a hammer, unstake the stacked part of the front differential case.
SST 09930–00010

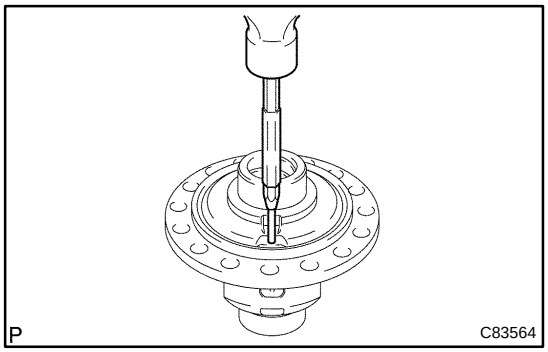

(b) Using a pin punch and a hammer, remove the front differential pinion shaft straight pin from the front differential case.

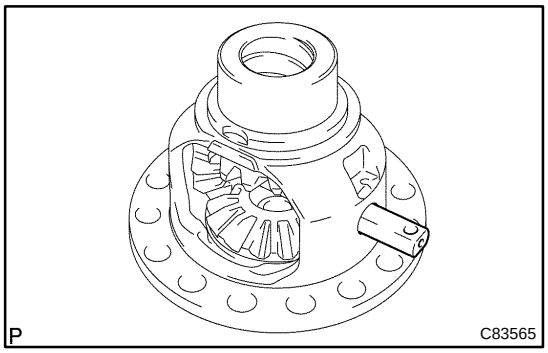

5. REMOVE FRONT DIFFERENTIAL PINION SHAFT NO.1

(a) Remove the front differential pinion shaft No.1 to the front differential case.

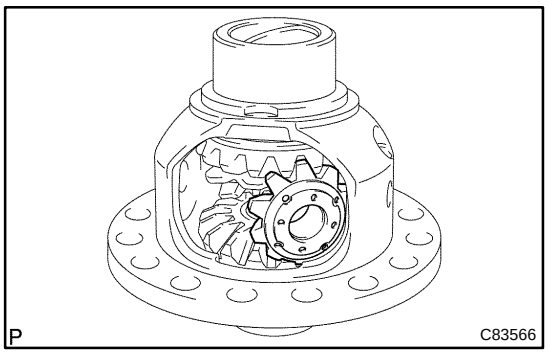

6. REMOVE FRONT DIFFERENTIAL SIDE GEAR

(a) Remove the 2 front differential pinions, 2 front differential pinion thrust washers, 2 front differential side gear and 2 front differential side gear thrust washers from the front differential case.

HINT:
Revolving front differential pinion, remove the 2 pinion thrust washers and side gear thrust washers.

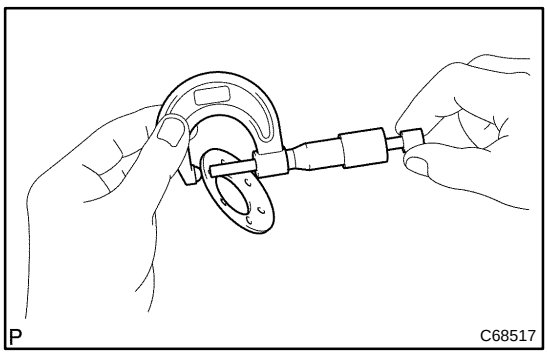

7. INSPECT FRONT DIFFERENTIAL PINION THRUST WASHER

(a) Using a micrometer, measure the thickness of the front differential pinion thrust washer.
Minimum thickness: 0.9 mm (0.035 in.)

If the thickness smaller than the minimum, replace the front differential pinion thrust washer.

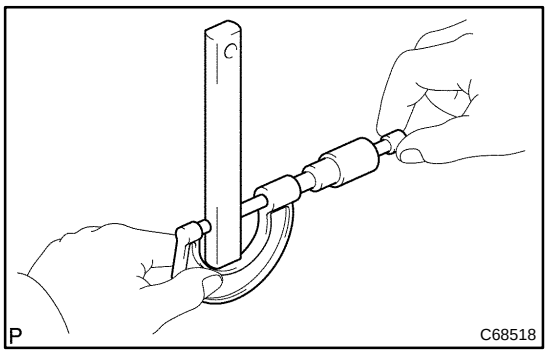

8. INSPECT FRONT DIFFERENTIAL PINION SHAFT NO.1

(a) Using a micrometer, measure the outer diameter of the front differential pinion shaft No.1.
Minimum thickness: 17.975 mm (0.70768 in.)

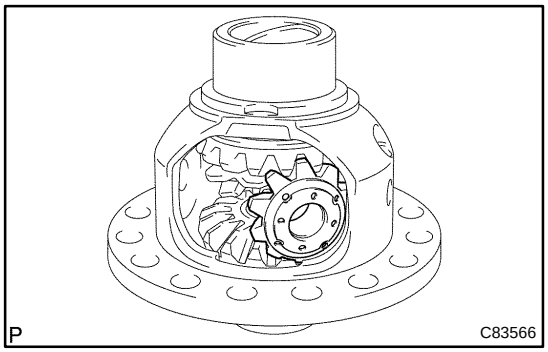

9. INSTALL FRONT DIFFERENTIAL SIDE GEAR

(a) Coat the rotating surface of the front differential side gear with gear oil.
(b) Install the 2 front differential side gear thrust washers to the 2 front differential side gears.

HINT:
Install the front differential side gear as thick as the removed one.

(c) Install the 2 front differential side gears, 2 front differential pinions and 2 front differential side gear thrust washers to the front differential case.

HINT:
Revolving the front differential pinion, install the 2 front differential pinions with front differential washers.

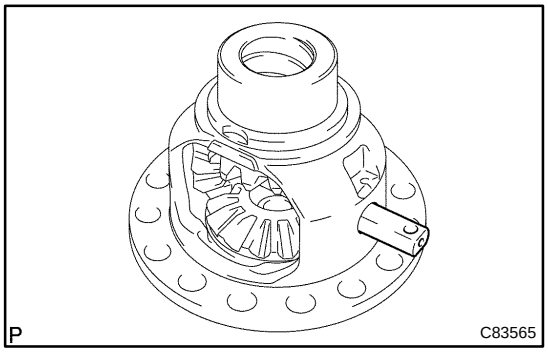

10. INSTALL FRONT DIFFERENTIAL PINION SHAFT NO.1

(a) Coat the rotating surface of the front differential pinion shaft No.1 with gear oil.
(b) Install the front differential pinion shaft No.1 to the front differential case so that the hole for the front differential pinion shaft straight pin is aligned with the hole in the front differential case.

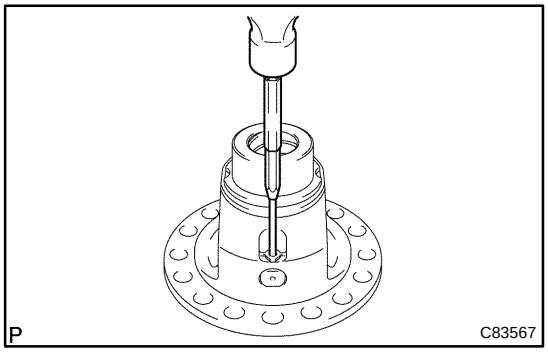

11. INSTALL FRONT DIFFERENTIAL PINION SHAFT STRAIGHT PIN

(a) Using a pin punch and a hammer, install the front differential pinion shaft straight pin to the front differential case.

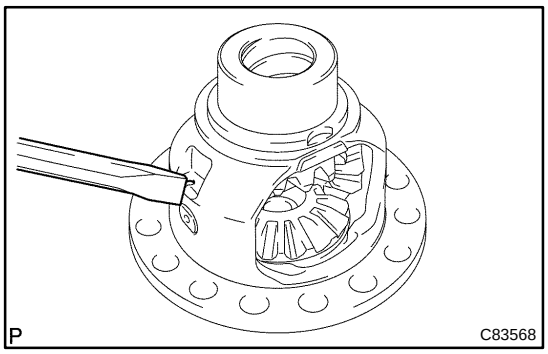

(b) Using a chisel and hammer, stake the front differential case hole.

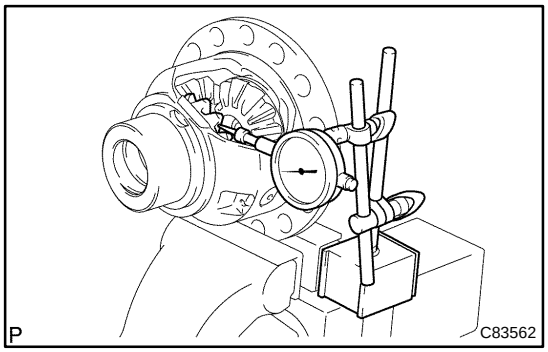

12. ADJUST FRONT DIFFERENTIAL SIDE GEAR BACKLASH

(a) Hold the front differential pinion to the front differential case side. Using a dial indicator, measure the front differential side gear backlash.
Standard backlash: 0.05 – 0.2 mm (0.0020 – 0.0079 in.)

(b) If the backlash is out of the specification, select another front differential side gear thrust washer and adjust it.
Thrust washer: mm (in.)

Part No.	Thickness	Mark
41361–28230	1.00 (0.0394)	1
41361–28240	1.10 (0.0433)	2
41361–28250	1.20 (0.0472)	3
41361–28260	1.30 (0.0512)	4

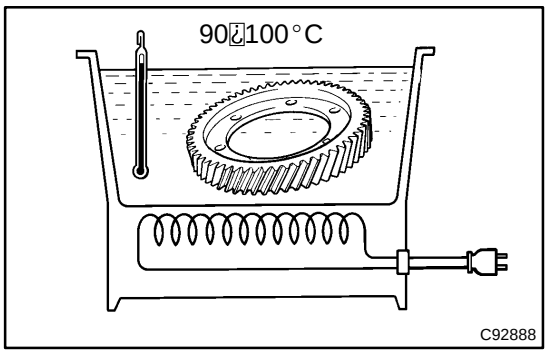

13. INSTALL FRONT DIFFERENTIAL RING GEAR

(a) Using a heater, heat the front differential ring gear to 90 – 100 °C (194.0 – 230.0 °F).

(b) Clean the contact surface differential case.

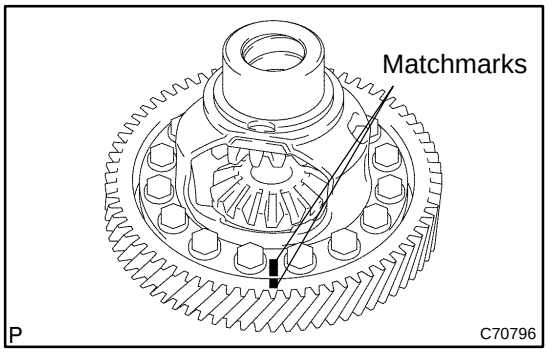

(c) Aligning the matchmarks, quickly install the front differential ring gear to the front differential case.
Torque: 106 N·m (1,081 kgf·cm, 78 ft·lbf)

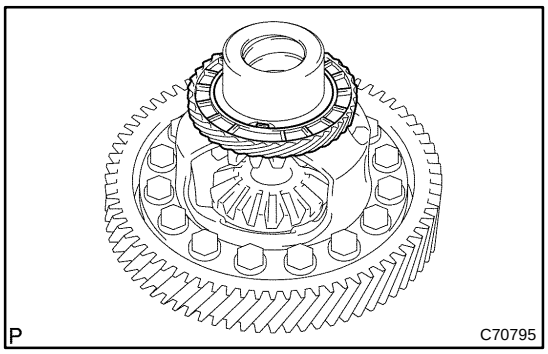

14. INSTALL SPEEDOMETER DRIVE (MTM) GEAR

(a) Install the speedometer drive (MTM) gear to the front differential case.

CLUTCH SYSTEM

4202B–01

PROBLEM SYMPTOMS TABLE

HINT:

Use the table below to help you find the cause of the problem. The numbers indicate the priority of the likely cause of the problem. Check each part in order. If necessary, replace these parts.

Symptom	Suspect Area	See page
Clutch grabs/chatters	5. Engine mounting (Loosen)	–
	6. Clutch disc (Runout is excessive)	42–14
	7. Clutch disc (Oily)	42–14
	8. Clutch disc (Worn out)	42–14
	9. Clutch disc torsion rubber (Damaged)	42–14
	10. Clutch disc (Glazed)	42–14
	11. Diaphragm spring (Out of tip alignment)	42–14
Clutch pedal spongy	1. Clutch Line (Air in line)	–
	2. Master cylinder cup (Damaged)	42–9
	3. Release cylinder rubber(Damaged)	42–12
Clutch noisy	1. Release bearing (Worn, dirty, or damaged)	42–14
	2. Clutch disc torsion rubber (Damaged)	42–14
Clutch slips	1. Clutch pedal (Free play out of adjustment)	42–7
	2. Clutch disc (Oily)	42–14
	3. Clutch disc (Worn out)	42–14
	4. Diaphragm spring (Damaged)	42–14
	5. Pressure plate (Distortion)	42–14
	6. Flywheel (Distortion)	–
Clutch does not disengage	1. Clutch pedal (Free play out of adjustment)	42–7
	2. Clutch line (Air in line)	–
	3. Master cylinder cup (Damaged)	42–9
	4. Release cylinder cup (Damaged)	42–12
	5. Clutch disc (out of true)	42–14
	6. Clutch disc (Runout of excessive)	42–14
	7. Clutch disc (Lining broken)	42–14
	8. Clutch disc (Dirty or burned)	42–14
	9. Clutch disc (Oily)	42–14
	10. Clutch disc (Lack of spline grease)	42–14

CLUTCH PEDAL SUB–ASSY

4202C–01

REPLACEMENT

1. **REMOVE INSTRUMENT CLUSTER FINISH PANEL (See page 71–12)**
2. **REMOVE COMBINATION METER ASSEMBLY(See page 71–25)**
3. **REMOVE INSTRUMENT PANEL SUB–ASSY UPPER (See page 71–12)**
4. **REMOVE INSTRUMENT PNL INSERT SUB–ASSY LWR LH (See page 71–12)**
5. **REMOVE CLUTCH MASTER CYLINDER PUSH ROD CLEVIS W/HOLE PIN**

(a) Remove the clip and hole pin.

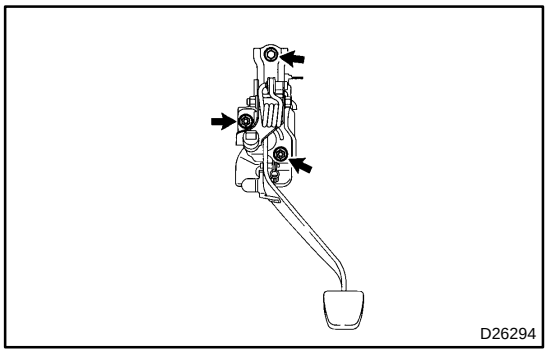

6. **REMOVE CLUTCH PEDAL ASSY**

(a) Disconnect the clutch start switch clamp and connector.
(b) Remove the bolt, 2 nuts and clutch pedal assy.

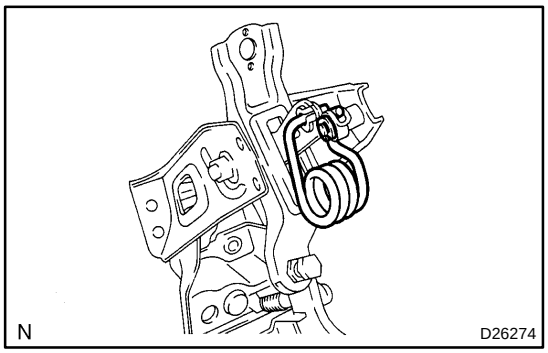

7. **REMOVE TURN OVER SPRING SEAT COMPRESSION SPRING**

(a) Using a small screwdriver, remove the E–ring.
(b) Remove the compression spring.

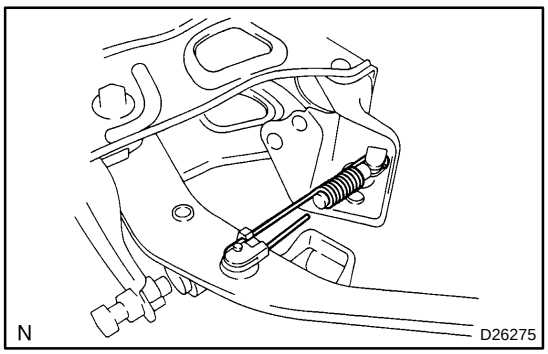

8. **REMOVE CLUTCH PEDAL SUB–ASSY**

(a) Remove the clutch pedal spring.
(b) Mount the clutch pedal assy in a soft jaw vise.

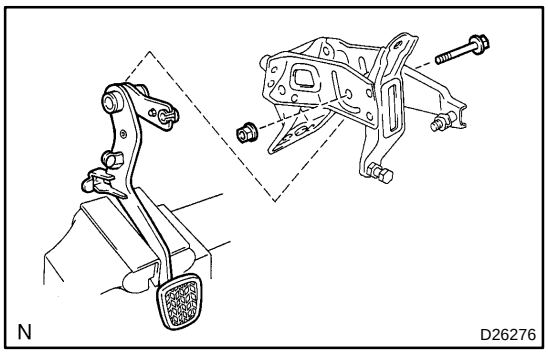

(c) Remove the bolt, nut and clutch pedal sub–assy from clutch pedal support.

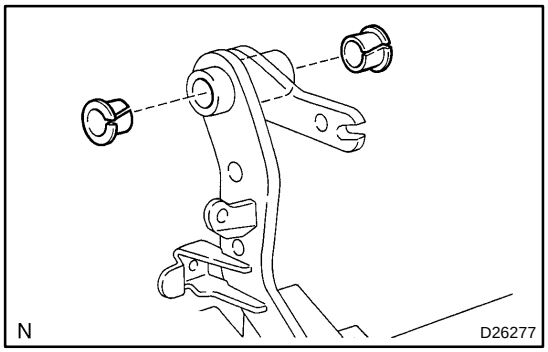

9. REMOVE CLUTCH PEDAL BUSH

(a) Remove the 2 bushes from the clutch pedal sub–assy.

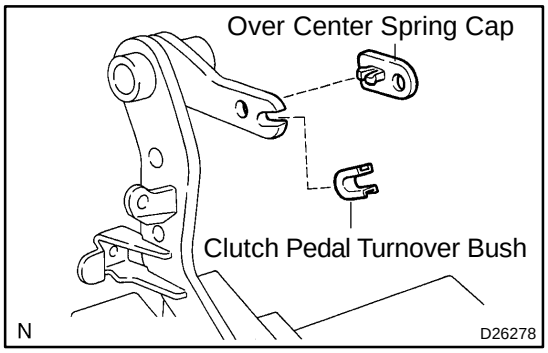

10. REMOVE CLUTCH PEDAL TURNOVER BUSH

11. REMOVE OVER CENTER SPRING CAP

12. REMOVE CLUTCH PEDAL PAD

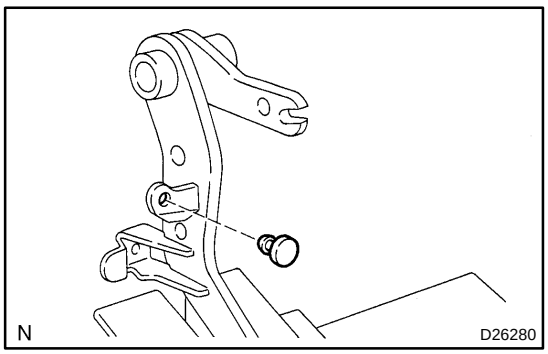

13. REMOVE CLUTCH PEDAL NO.1 CUSHION

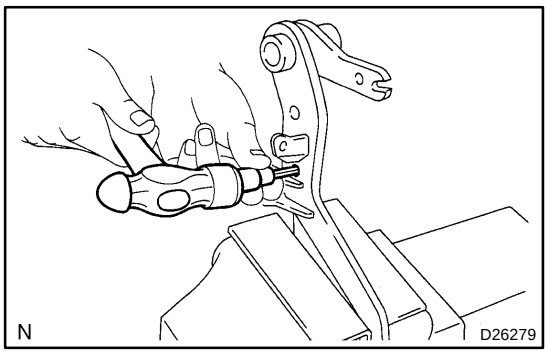

14. REMOVE CLUTCH MASTER CYLINDER PUSH ROD CLEVIS BUSH

(a) Using a hexagon wrench (8 mm) and hammer, remove the clevis bush from the clutch pedal sub–assy.

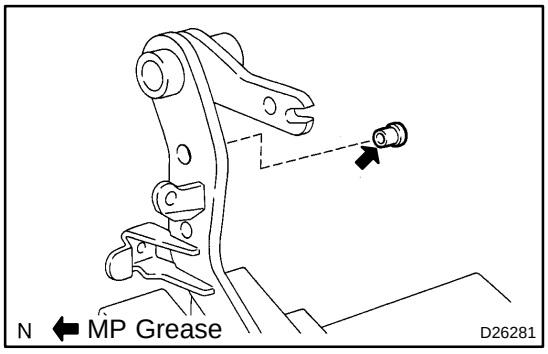

15. INSTALL CLUTCH MASTER CYLINDER PUSH ROD CLEVIS BUSH

(a) Apply MP grease to inside of a new bush.
(b) Install the clevis bush to the clutch pedal sub–assy.

HINT:
Install the clevis bush from the right side of the vehicle.

16. INSTALL CLUTCH PEDAL NO.1 CUSHION

17. INSTALL CLUTCH PEDAL PAD

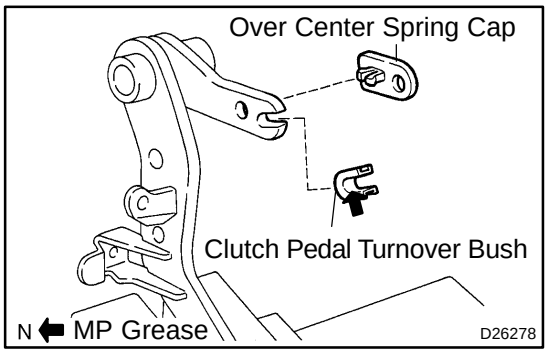

18. INSTALL OVER CENTER SPRING CAP

19. INSTALL CLUTCH PEDAL TURNOVER BUSH

(a) Apply MP grease to inside of a new bush.
(b) Install the bush to the clutch pedal sub–assy.

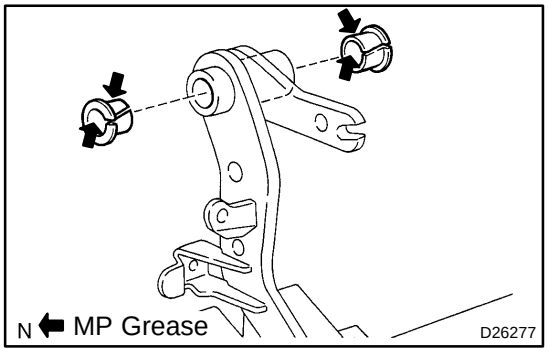

20. INSTALL CLUTCH PEDAL BUSH

(a) Apply MP grease to both side of 2 new bushes.
(b) Install the 2 bushes to the clutch pedal sub–assy.

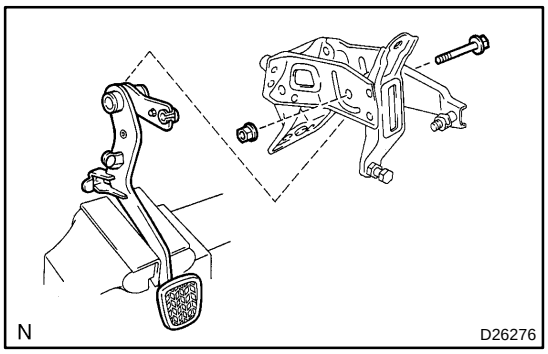

21. INSTALL CLUTCH PEDAL SUB–ASSY

(a) Install the clutch pedal sub–assy to the clutch pedal support with the bolt and nut.
Torque: 36.8 N·m (375 kgf·cm, 27 ft·lbf)

HINT:
Install the bolt from the right side of the vehicle.

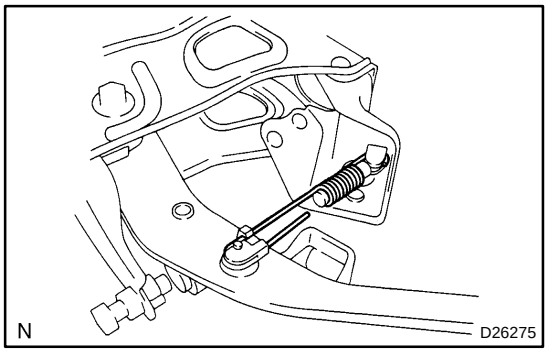

(b) Install the clutch pedal spring.

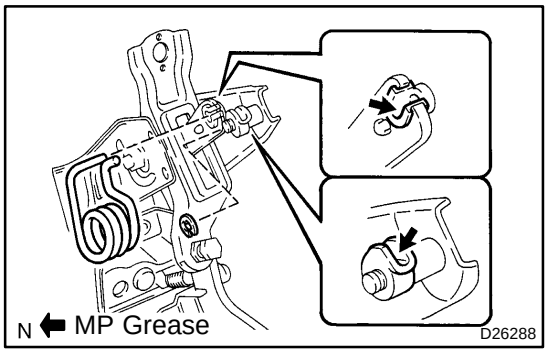

22. INSTALL TURN OVER SPRING SEAT COMPRESSION SPRING

(a) Apply MP grease to the contact surface of the bush and spring.
(b) Install the compression spring.
(c) Using needle nose pliers, install the E–ring.

23. INSTALL CLUTCH PEDAL ASSY

(a) Install the clutch pedal assy with the bolt and 2 nuts.
Torque:
Bolt:
Nut:

(b) Connect the clutch start switch clamp and connector.

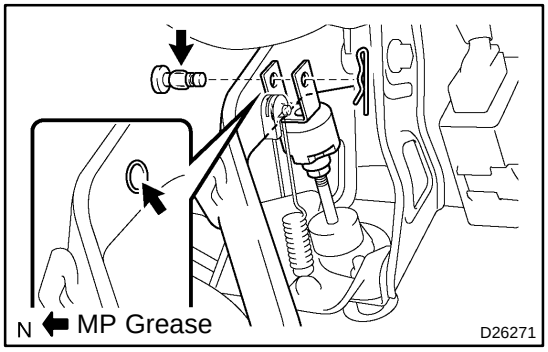

24. INSTALL CLUTCH MASTER CYLINDER PUSH ROD CLEVIS W/HOLE PIN

(a) Apply MP grease to the contact surface of the hole pin and bush.
(b) Connect the clevis to the clutch pedal assy with the hole pin.

HINT:
Install the hole pin from the left side of the vehicle.

(c) Install the clip to the hole pin.

25. INSTALL INSTRUMENT PNL INSERT SUB–ASSY LWR LH

26. INSTALL INSTRUMENT PANEL SUB–ASSY UPPER

27. INSTALL COMBINATION METER ASSEMBLY(See page 71–25)
28. INSTALL INSTRUMENT CLUSTER FINISH PANEL (See page 71–12)
29. INSPECT AND ADJUST CLUTCH PEDAL SUB–ASSY (See page 42–7)
30. INSPECT CLUTCH START SWITCH ASSY (See page 42–18)

ADJUSTMENT

1. INSPECT AND ADJUST CLUTCH PEDAL SUB–ASSY

(a) Turn over the floor carpet.

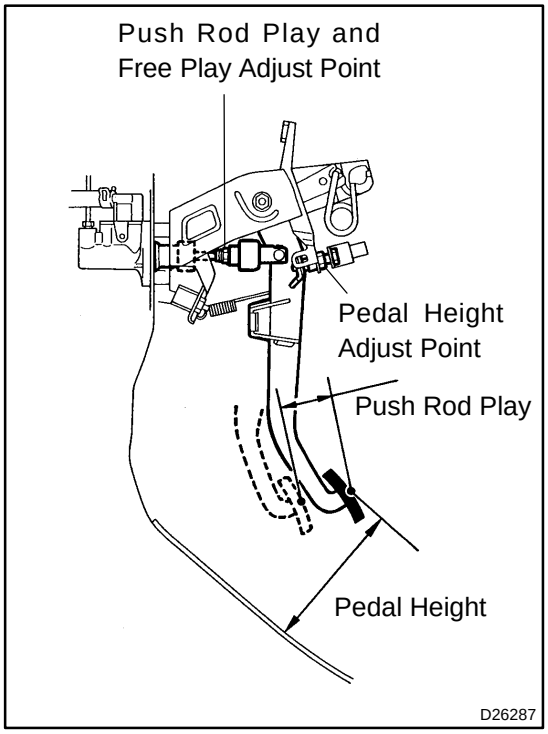

(b) Check that the pedal height is correct.
Pedal height from asphalt sheet:
159.0 – 169.0 mm (6.260 – 6.654 in.)

(c) Adjust the pedal height.
(1) Loosen the lock nut and turn the stopper bolt until the height is correct. Tighten the lock nut.
Torque: 25.5 N·m (260 kgf·cm, 10 ft·lbf)

(d) Check that the pedal free play and push rod play are correct.
(1) Depress the pedal until the clutch resistance begin to be felt.
Pedal free play: 5.0 – 15.0 mm (0.197 – 0591 in.)
(2) Gently depress the pedal until the resistance begins to increase a little.
Push rod play at pedal top:
1.0 – 5.0 mm (0.039 – 0.197 in.)

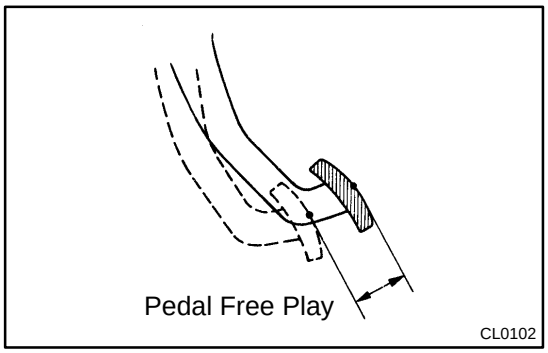

(e) Adjust the pedal free play and push rod play.
(1) Remove the instrument panel sub–assy upper.
(2) Remove the instrument panel insert sub–assy lower LH.
(3) Disconnect the air duct.
(4) Loosen the lock nut and turn the push rod until the free play and push rod play are correct.
(5) Tighten the lock nut.
(6) After adjusting the pedal free play, check the pedal height.
(7) Connect the air duct.
(8) Install the instrument panel insert sub–assy lower LH.
(9) Install the instrument panel sub–assy upper.

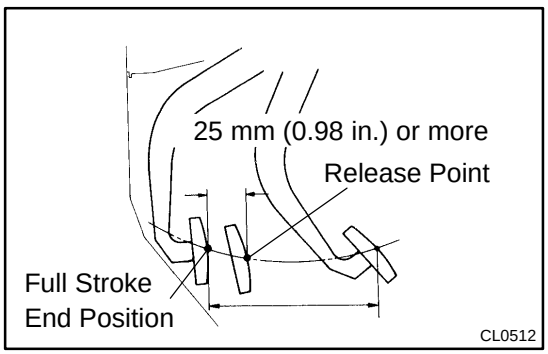

(f) Check the clutch release point.
(1) Pull the parking brake lever and install wheel stopper.
(2) Start the engine and idle the engine.
(3) Without depressing the clutch pedal, slowly shift the shift lever into reverse position until the gears contact.

(4) Gradually depress the clutch pedal and measure the stroke distance from the point that the gear noise stops (release point) up to the full stroke end position.

Standard distance: 25 mm (0.98 in.) or more
(From pedal stroke end position to release point)

If the distance is not as specified, perform the following operations.

- Check pedal height.
- Check push rod play and pedal free play.
- Bleed the clutch line.
- Check the clutch cover assy and disc assy.

CLUTCH MASTER CYLINDER ASSY

4202E–01

OVERHAUL

1. DRAIN CLUTCH FLUID

2. REMOVE BRAKE MASTER CYLINDER SUB–ASSY
(See page 32–12)

3. REMOVE BRAKE BOOSTER ASSY
(See page 32–20)

4. DISCONNECT CLUTCH RESERVOIR TUBE

(a) Loosen the clip and disconnect the clutch reservoir tube from the clutch master cylinder assy.

HINT:
Use a container to catch the fluid.

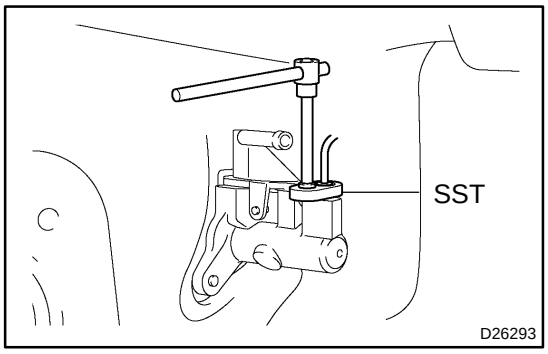

5. DISCONNECT CLUTCH MASTER CYLINDER TO FLEXIBLE HOSE TUBE

(a) Using SST, disconnect the flexible hose tube.
SST 09023–00100

HINT:
Use a container to catch the fluid.

6. REMOVE CLUTCH MASTER CYLINDER PUSH ROD CLEVIS W/HOLE PIN

(a) Remove the clip and hole pin.

7. REMOVE CLUTCH MASTER CYLINDER ASSY

(a) Remove the 2 nuts and clutch master cylinder assy.

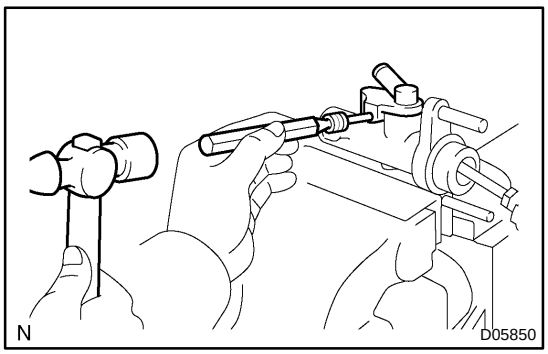

8. REMOVE CLUTCH MASTER CYLINDER KIT

(a) Using a pin punch (ϕ 5 mm) and hammer, drive out the slotted spring pin.
(b) Remove the inlet union and grommet.
(c) Loosen the lock nut, and remove the push rod clevis.
(d) Remove the lock nut from the push rod.
(e) Remove the boot from the cylinder body.

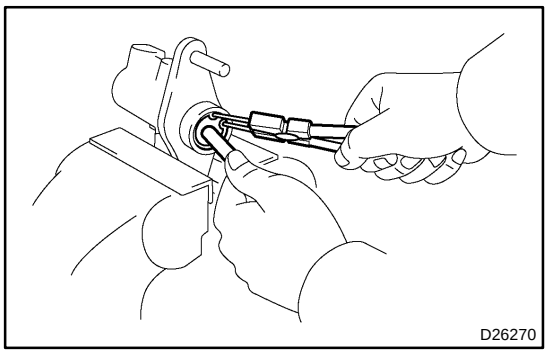

(f) While pushing the piston rod, using snap ring pliers, remove the snap ring.
(g) Remove the push rod from the cylinder body.

NOTICE:

The piston may pop up out of the cylinder body. Therefore, slowly remove the push rod from the cylinder body.

(h) Remove the stop plate from the push rod.
(i) Remove the piston with spring from the cylinder.

NOTICE:

Be careful not to damage the inside of the cylinder body.

9. INSTALL CLUTCH MASTER CYLINDER KIT

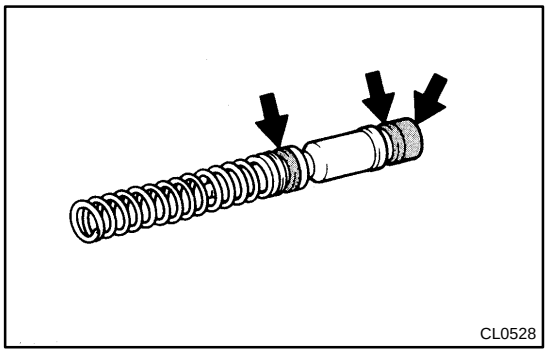

(a) Coat parts with lithium soap base glycol grease, shown in the illustration.
(b) Install the piston with spring into the cylinder.

NOTICE:

Be careful not to damage the inside of the cylinder body.

(c) Install the stop plate to the push rod.
(d) Install the push rod to the cylinder body.

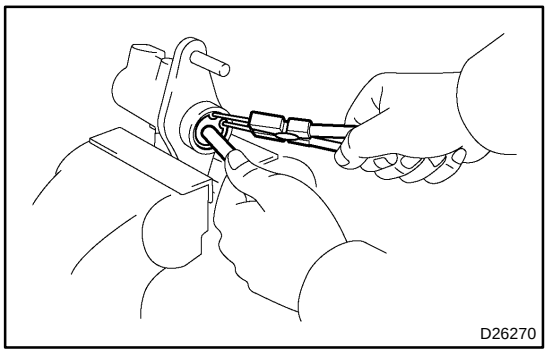

(e) While pushing the piston rod, using snap ring pliers, install the snap ring.
(f) Install the boot to the cylinder body.
(g) Install the lock nut to the push rod.
(h) Temporarily install the push rod clevis with the lock nut to the push rod.
(i) Install the inlet union and a new grommet.

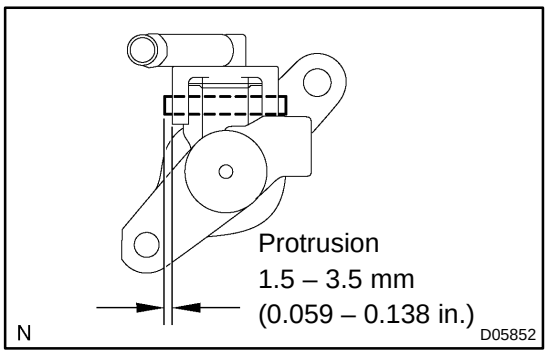

(j) Using a pin punch (ϕ 5 mm) and hammer, drive in the slotted spring pin.

10. INSTALL CLUTCH MASTER CYLINDER ASSY

(a) Install the clutch master cylinder assy with the 2 nuts.
Torque: 11.8 N·m (120 kgf·cm, 9 ft·lbf)

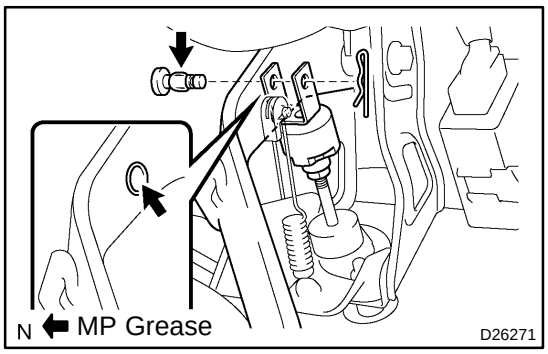

11. INSTALL CLUTCH MASTER CYLINDER PUSH ROD CLEVIS W/HOLE PIN

(a) Apply MP grease to the contact surface of the hole pin and bush.
(b) Connect the clevis to the clutch pedal assy with the hole pin.

HINT:
Install the hole pin from the left side of the vehicle.

(c) Install the clip to the hole pin.

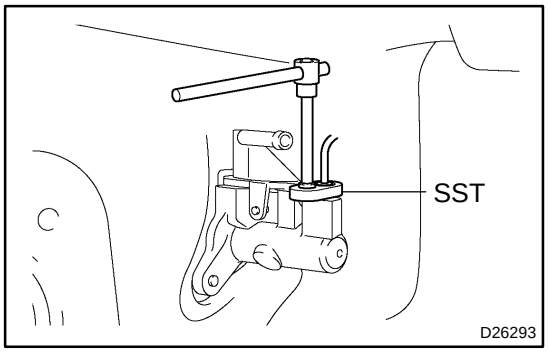

12. CONNECT CLUTCH MASTER CYLINDER TO FLEXIBLE HOSE TUBE

(a) Using SST, connect the flexible hose tube.
SST 09023–00100
Torque: 15.2 N·m (155 kgf·cm, 11 ft·lbf)

13. CONNECT CLUTCH RESERVOIR TUBE

(a) Connect the clutch reservoir tube with the clip to the clutch master cylinder assy.

NOTICE:
Connect the clutch reservoir tube so that it will not be twisted.

14. INSTALL BRAKE BOOSTER ASSY
(See page 32–20)
15. INSTALL BRAKE MASTER CYLINDER SUB–ASSY
(See page 32–12)
16. BLEED MASTER CYLINDER
SST 09023–00100
17. BLEED BRAKE LINE(See page 32–4)
18. BLEED CLUTCH PIPE LINE
(a) Fill the brake reservoir tank with clutch fluid and bleed clutch system.
Torque: 8.3 N·m (85 kgf·cm, 73 in.·lbf)
19. CHECK AND ADJUST BRAKE PEDAL HEIGHT(See page 32–6)
20. INSPECT AND ADJUST CLUTCH PEDAL SUB–ASSY
(See page 42–7)
21. CHECK BRAKE FLUID LEAKAGE
22. CHECK CLUTCH FLUID LEAKAGE
23. CHECK FLUID LEVEL IN RESERVOIR

CLUTCH RELEASE CYLINDER ASSY

42027–01

OVERHAUL

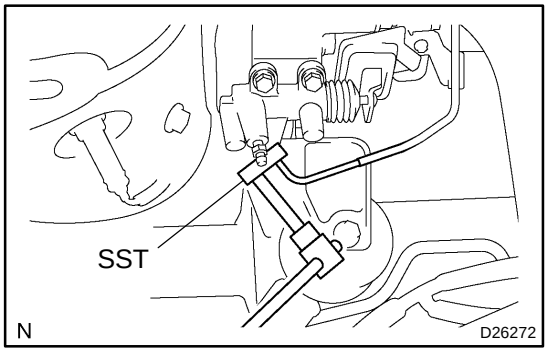

1. DISCONNECT CLUTCH RELEASE CYLINDER TO FLEXIBLE HOSE TUBE

(a) Using SST, disconnect the flexible hose tube.
SST 09023–00100

HINT:
Use a container to catch the fluid.

2. REMOVE CLUTCH RELEASE CYLINDER ASSY

(a) Remove the 2 bolts and clutch release cylinder assy.

3. REMOVE CLUTCH RELEASE CYLINDER KIT

(a) Remove the boot from the cylinder body.
(b) Remove the push rod from the cylinder body.
(c) Remove the piston from the cylinder body.

NOTICE:
Be careful not to damage the inside of the cylinder body.

(d) Remove the spring from the cylinder body.
(e) Remove the bleeder plug cap from the bleeder plug.

4. REMOVE RELEASE CYLINDER BLEEDER PLUG

5. INSTALL RELEASE CYLINDER BLEEDER PLUG

Torque: 8.3 N·m (85 kgf·cm, 73 in.·lbf)

6. INSTALL CLUTCH RELEASE CYLINDER KIT

(a) Install the bleeder plug cap to the bleeder plug.
(b) Install a new spring to the cylinder body.

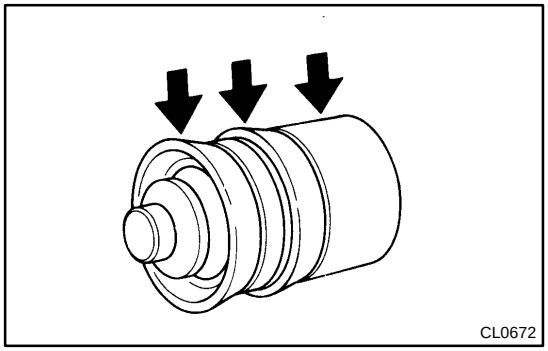

(c) Coat piston with lithium soap base glycol grease, as shown in the illustration.
(d) Install the piston to the cylinder body.

NOTICE:
Be careful not to damage the inside of the cylinder body.

(e) Install the push rod to the cylinder body.
(f) Install the boot to the cylinder body.

7. INSTALL CLUTCH RELEASE CYLINDER ASSY

(a) Install the clutch release cylinder assy with the 2 bolts.
Torque: 11.8 N·m (120 kgf·cm, 9 ft·lbf)

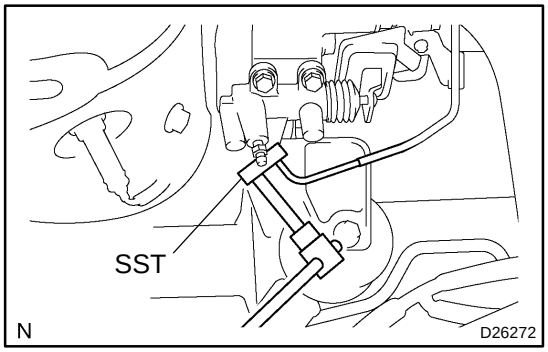

8. CONNECT CLUTCH RELEASE CYLINDER TO FLEXIBLE HOSE TUBE

(a) Using SST, connect the flexible hose tube.
SST 09023–00100
Torque: 15.2 N·m (155 kgf·cm, 11 ft·lbf)

9. BLEED CLUTCH PIPE LINE

(a) Fill the brake reservoir tank with clutch fluid and bleed clutch system.
Torque: 8.3 N·m (85 kgf·cm, 73 in.·lbf)

10. CHECK CLUTCH FLUID LEAKAGE

11. CHECK FLUID LEVEL IN RESERVOIR

CLUTCH UNIT

4202F–01

OVERHAUL

1. REMOVE MANUAL TRANSAXLE ASSY
(See page 41–11)

2. REMOVE CLUTCH RELEASE FORK BOOT

3. REMOVE CLUTCH RELEASE BEARING ASSY

4. REMOVE CLUTCH RELEASE FORK SUB–ASSY

5. REMOVE RELEASE BEARING HUB CLIP

6. REMOVE RELEASE FORK SUPPORT

(a) Remove the release fork support from the manual transaxle assy.

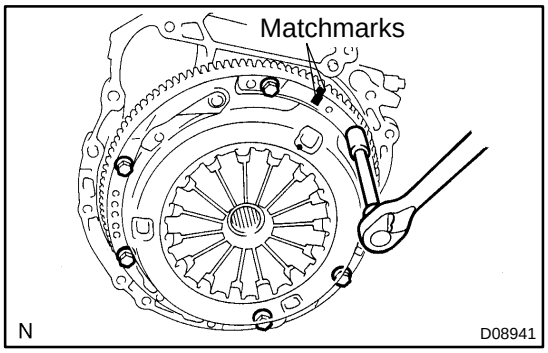

7. REMOVE CLUTCH COVER ASSY

(a) Place the matchmarks on the clutch cover assy with the one on the flywheel sub–assy.
(b) Loosen each set bolt one turn at a time until spring tension is released.
(c) Remove the set bolts and pull off the clutch cover assy.

NOTICE:
Do not drop the clutch disc assy.

8. REMOVE CLUTCH DISC ASSY

NOTICE:
Keep the lining part of the clutch disc assy, the pressure plate and surface of the flywheel sub–assy away from oil and foreign attachment.

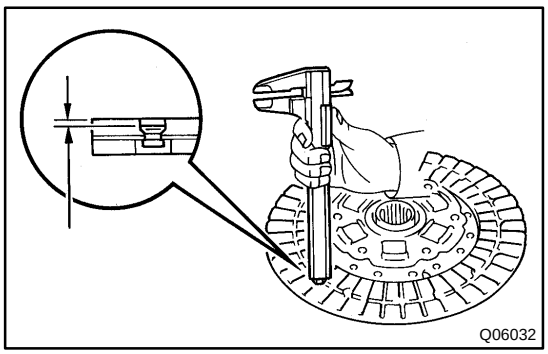

9. INSPECT CLUTCH DISC ASSY

(a) Using vernier calipers, measure the rivet head depth.
Maximum rivet depth: 0.3 mm (0.012 in.)

If necessary, replace the clutch disc assy.

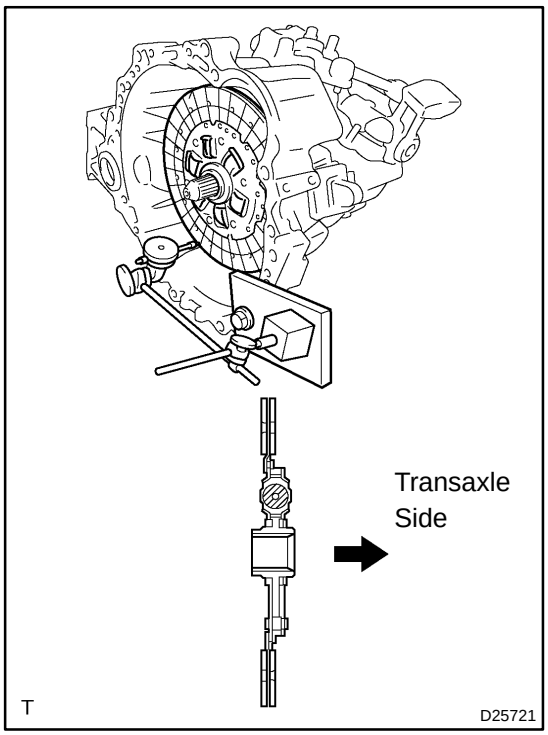

(b) Install the clutch disc assy to the transaxle assy.

NOTICE:

Take care not to insert the clutch disc assy in the wrong direction

(c) Using a dial indicator, check the clutch disc assy runout.

Minimum runout: 0.8 mm (0.031 in.)

If necessary, replace the clutch disc assy.

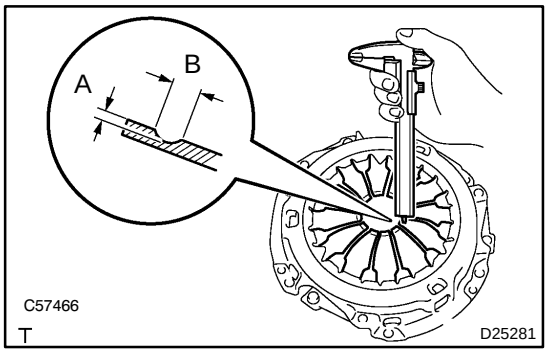

10. INSPECT CLUTCH COVER ASSY

(a) Using vernier calipers, inspect the diaphragm spring for depth and width of wear.

Maximum:

A (Depth): 0.5 mm (0.020 in.)

B (Width): 6.0 mm (0.236 in.)

If necessary, replace clutch cover assy.

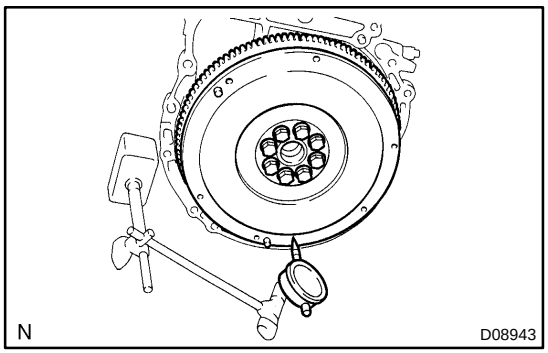

11. INSPECT FLYWHEEL SUB–ASSY

(a) Using a dial indicator, inspect the flywheel sub–assy run-out.

Maximum runout: 0.1 mm (0.004 in.)

If necessary, replace the flywheel sub–assy.

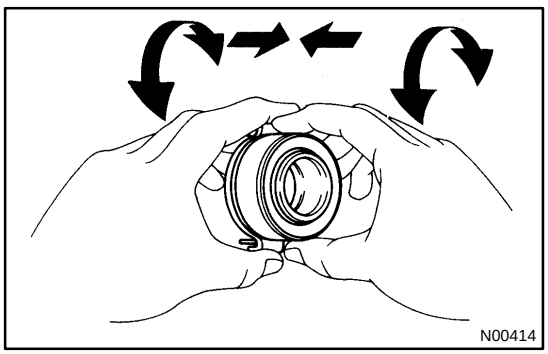

12. INSPECT CLUTCH RELEASE BEARING ASSY

(a) Turn the release bearing assy by hand while applying force in the axial direction.

HINT:

The bearing is permanently lubricated and requires no cleaning or lubrication.

If necessary, replace the release bearing assy.

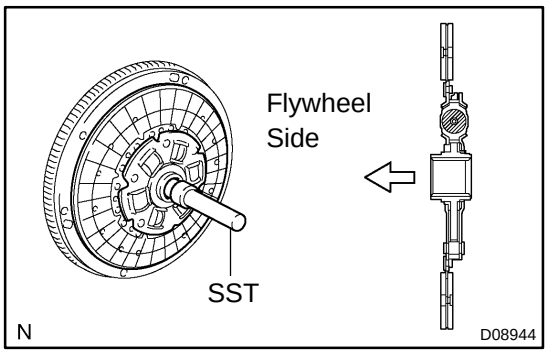

13. INSTALL CLUTCH DISC ASSY

(a) Insert SST in the clutch disc assy, then insert them in the flywheel sub–assy.
SST 09301–00220

NOTICE:
Take care not to insert clutch disc assy in the wrong direction.

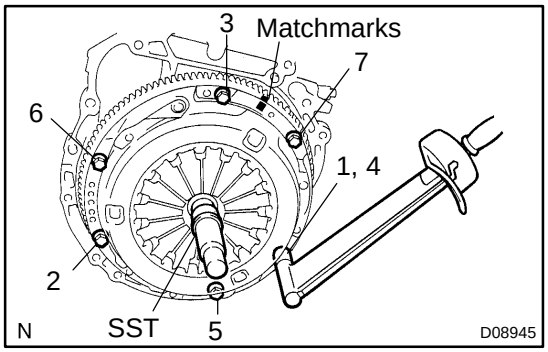

14. INSTALL CLUTCH COVER ASSY

(a) Align the matchmarks on the clutch cover assy and flywheel sub–assy.
(b) Following the procedures shown in the illustration, tighten the 6 bolts, in the order starting the bolt locating near the knock pin on the top.
Torque: 19.1 N·m (195 kgf·cm, 14 ft·lbf)

HINT:
- Following the order in the illustration, tighten the bolts at a time evenly.
- Move SST up and down, right and left lightly, after checking that the disc is in the center, tighten the bolts.

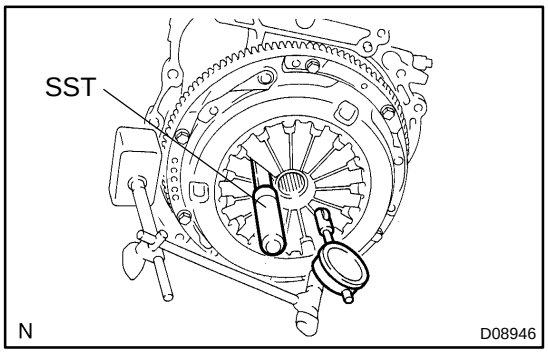

15. INSPECT AND ADJUST CLUTCH COVER ASSY

(a) Using a dial indicator with roller instrument, check the diaphragm spring tip alignment.
Maximum non–alignment: 0.5 mm (0.020 in.)

If alignment is not as specified, using SST, adjust the diaphragm spring tip alignment.
SST 09333–00013

16. INSTALL RELEASE FORK SUPPORT

(a) Install the release fork support to the manual transaxle assy.
Torque: 47.1 N·m (480 kgf·cm, 35 ft·lbf)

17. INSTALL RELEASE BEARING HUB CLIP

(a) Install the release bearing hub clip to the release bearing assy.

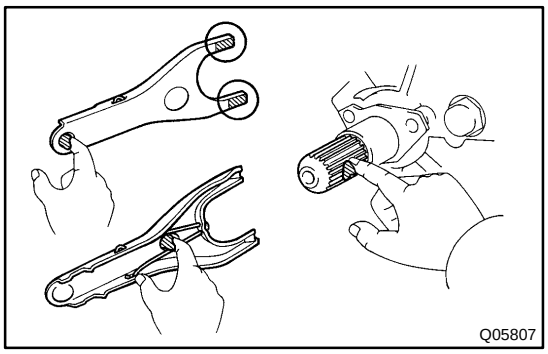

18. INSTALL CLUTCH RELEASE FORK SUB–ASSY

(a) Apply release hub grease to the release fork and release bearing assy contact, release fork and push rod contact and release fork pivot points.
Sealant:
Part No. 08887–01806, RELEASE HUB GREASE or equivalent

(b) Install the release fork to the release bearing assy.

19. INSTALL CLUTCH RELEASE BEARING ASSY

(a) Apply the clutch spline grease to the input shaft spline.
Sealant:
Part No. 08887–01706, CLUTCH SPLINE GREASE or equivalent

(b) Install the the release fork with release bearing assy to the manual transaxle assy.

NOTICE:
After the installation, move the folk forward and backward to check that the release bearing slides smoothly.

20. INSTALL CLUTCH RELEASE FORK BOOT

21. INSTALL MANUAL TRANSAXLE ASSY
(See page 41–11)

CLUTCH START SWITCH ASSY

42028–01

ON–VEHICLE INSPECTION

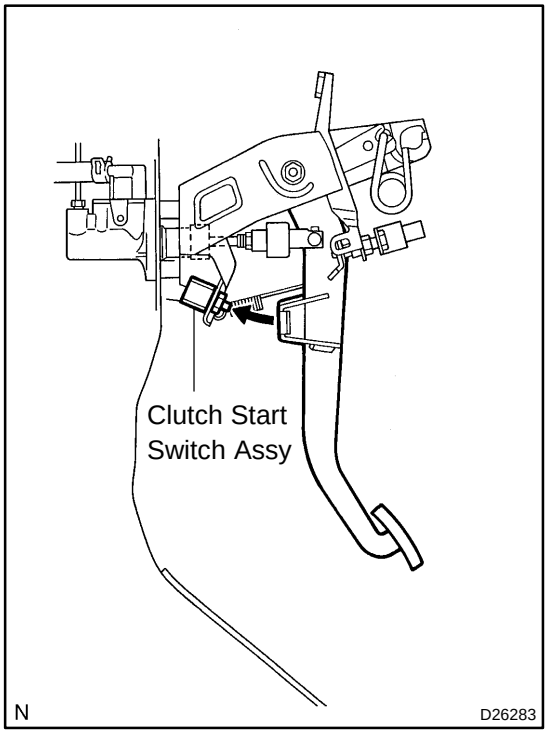

1. CHECK CLUTCH START SYSTEM

(a) Check that the engine does not start when the clutch pedal is released.

(b) Check that the engine starts when the clutch pedal is fully depressed.

If necessary, replace the clutch start switch assy.

42029–01

INSPECTION

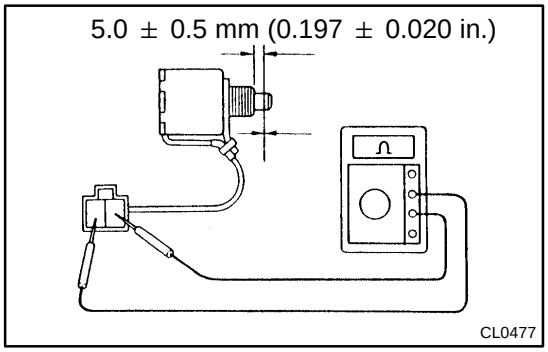

1. INSPECT CLUTCH START SWITCH ASSY

(a) Check the continuity between terminals when the switch is ON and OFF.

Switch position	Condition
ON (pushed)	Continuity
OFF (free)	No continuity

4202A–01

REPLACEMENT

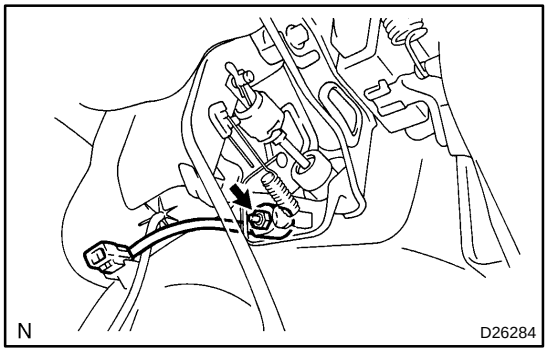

1. REMOVE CLUTCH START SWITCH ASSY

(a) Disconnect the clutch start switch assy connector.
(b) Remove the nut and clutch start switch assy from the clutch pedal support.

2. INSTALL CLUTCH START SWITCH ASSY

(a) Install the clutch start switch assy with the nut.
Torque: 15.68 N·m (160 kgf·cm, 12 ft·lbf)
(b) Connect the clutch start switch assy connector.

3. INSPECT CLUTCH START SWITCH ASSY
(See page 42–18)

STEERING SYSTEM

5000O–02

PRECAUTION

1. HANDLING PRECAUTIONS ON STEERING SYSTEM

(a) Care must be taken when replacing parts. Incorrect replacement may affect the performance of the steering system and result in a driving hazard.

2. HANDLING PRECAUTIONS ON SRS AIRBAG SYSTEM

(a) The CAMRY is equipped with SRS (Supplemental Restraint System) such as the driver airbag and front passenger airbag. Failure to carry out service operation in the correct sequence could cause the SRS to unexpectedly deploy during servicing, possibly leading to a serious accident. Before servicing (including removal or installation of parts, inspection or replacement), be sure to read the precautionary notice for the supplemental restraint system (See page 60–1).

5002P–01

PROBLEM SYMPTOMS TABLE

Use the table below to help you find the cause of the problem. The numbers indicate the priority of the likely cause of the problem. Check each part in the order shown. If necessary, repair or replace these parts.

Symptom	Suspect Area	See page
Hard steering	1. Tires (Improperly inflated)	28–1
	2. Power steering fluid level (Low)	51–3
	3. Drive belt (Loose)	14–5 14–140
	4. Front wheel alignment (Incorrect)	26–5
	5. Steering system joints (Worn)	–
	6. Suspension arm ball joints (Worn)	26–17
	7. Steering column (Binding)	–
	8. Power steering vane pump	51–8 51–17
	9. Power steering gear	51–29
Poor return	1. Tires (Improperly inflated)	28–1
	2. Front wheel alignment (Incorrect)	26–5
	3. Steering column (Binding)	–
	4. Power steering gear	51–29
Excessive play	1. Steering system joints (Worn)	–
	2. Suspension arm ball joints (Worn)	26–17
	3. Intermediate shaft, Sliding yoke (Worn)	–
	4. Front wheel bearing (Worn)	30–21
	5. Power steering gear	51–29
Abnormal noise	1. Power steering fluid level (Low)	51–3
	2. Steering system joints (Worn)	–
	3. Power steering vane pump	51–8 51–17
	4. Power steering gear	51–29

5000P–02

ON–VEHICLE INSPECTION

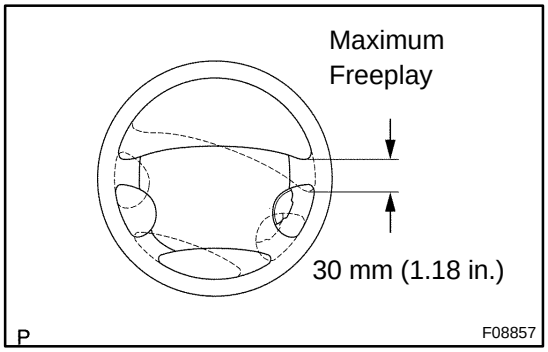

1. CHECK STEERING WHEEL FREEPLAY

(a) Stop the vehicle and face the tires straight ahead.

(b) Rock the steering wheel gently up and down by your hand, check the steering wheel freeplay.

Maximum freeplay: 30 mm (1.18 in.)

REPAIR

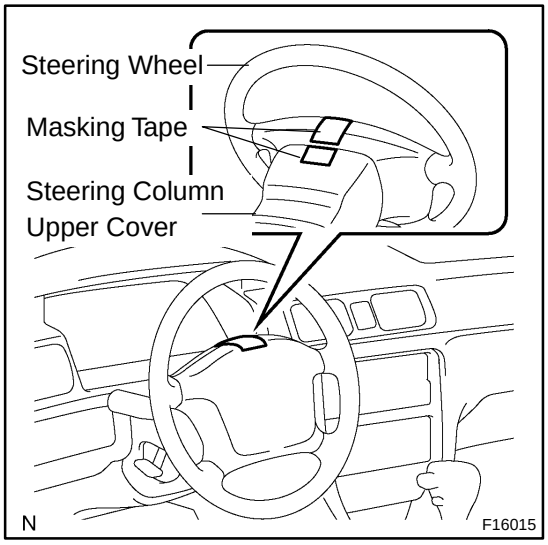

1. STEERING OFF CENTER REPAIR PROCEDURE

(a) Inspect steering wheel off center.

(1) Apply masking tape on the top center of the steering wheel and steering column upper cover.

(2) Drive the vehicle in a straight line for 100 meters at a constant speed of 35 mph (56 km/h), and hold the steering wheel to maintain the course.

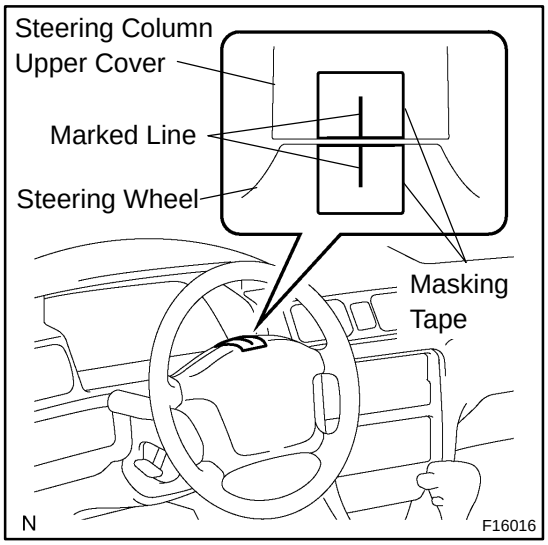

(3) Draw a line on the masking tape as shown in the illustration.

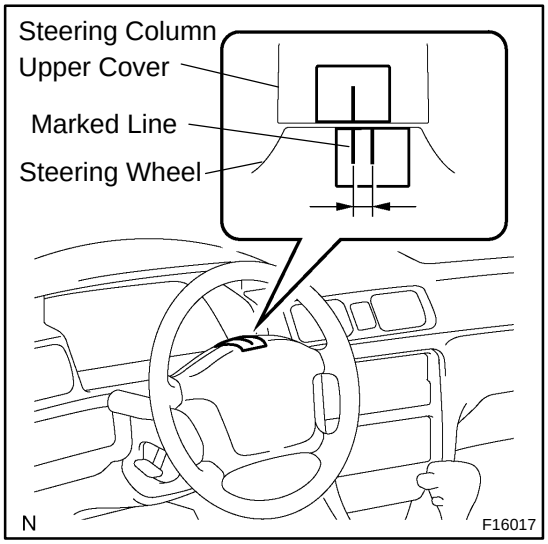

(4) Turn the steering wheel to its straight position.

HINT:

Refer to the upper surface of the steering wheel, steering spoke and SRS airbag line for the straight position.

(5) Draw a new line on the masking tape or the steering wheel as shown in the illustration.

(6) Measure the distance between the 2 lines on the masking tape of the steering wheel.

(7) Convert the measured distance to steering angle.

Measured distance 1 mm (0.04 in.) = Steering angle approximately 1 deg.

HINT:

Make a note of the steering angle.

(b) Adjust steering angle.

NOTICE:

The adjustment method for steering angle is different depending on the models. Check whether it is type A or B.

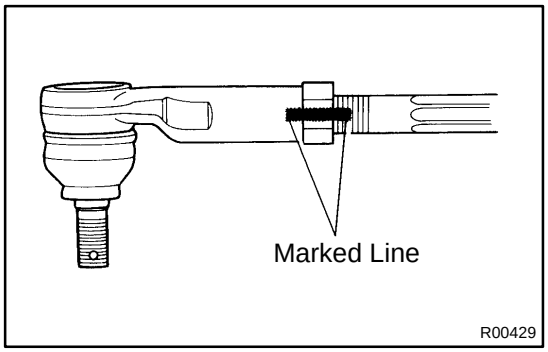

(1) Draw a line on the RH and LH tie rod and rack ends where it can easily be seen.

(2) Using a paper gauge, measure the distance from RH and LH tie rod ends to the rack end screws.

HINT:

- Measure the RH side and LH side.
- Make a note of the measured values.

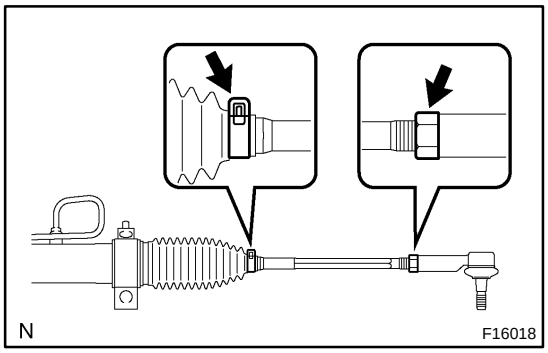

(3) Remove the RH and LH boot clips from the rack boots.

(4) Loosen the RH and LH lock nuts.

(5) Turn the RH and LH rack end by the same amount (but in different directions) according to the steering angle.

1 turn 360 deg. of rack end (1.5 mm (0.059 in.) horizontal movement) – 12 deg. of steering angle.

(6) Tighten the RH and LH lock nuts by the specified torque.

Torque: 74 N·m (750 kgf·cm, 54 ft·lbf)

NOTICE:

Make sure that the difference in length between RH and LH tie rod ends and rack end screws are within 1.5 mm (0.059 in.).

(7) Install the RH and LH boot clips.

STEERING COLUMN

COMPONENTS

5002R–01

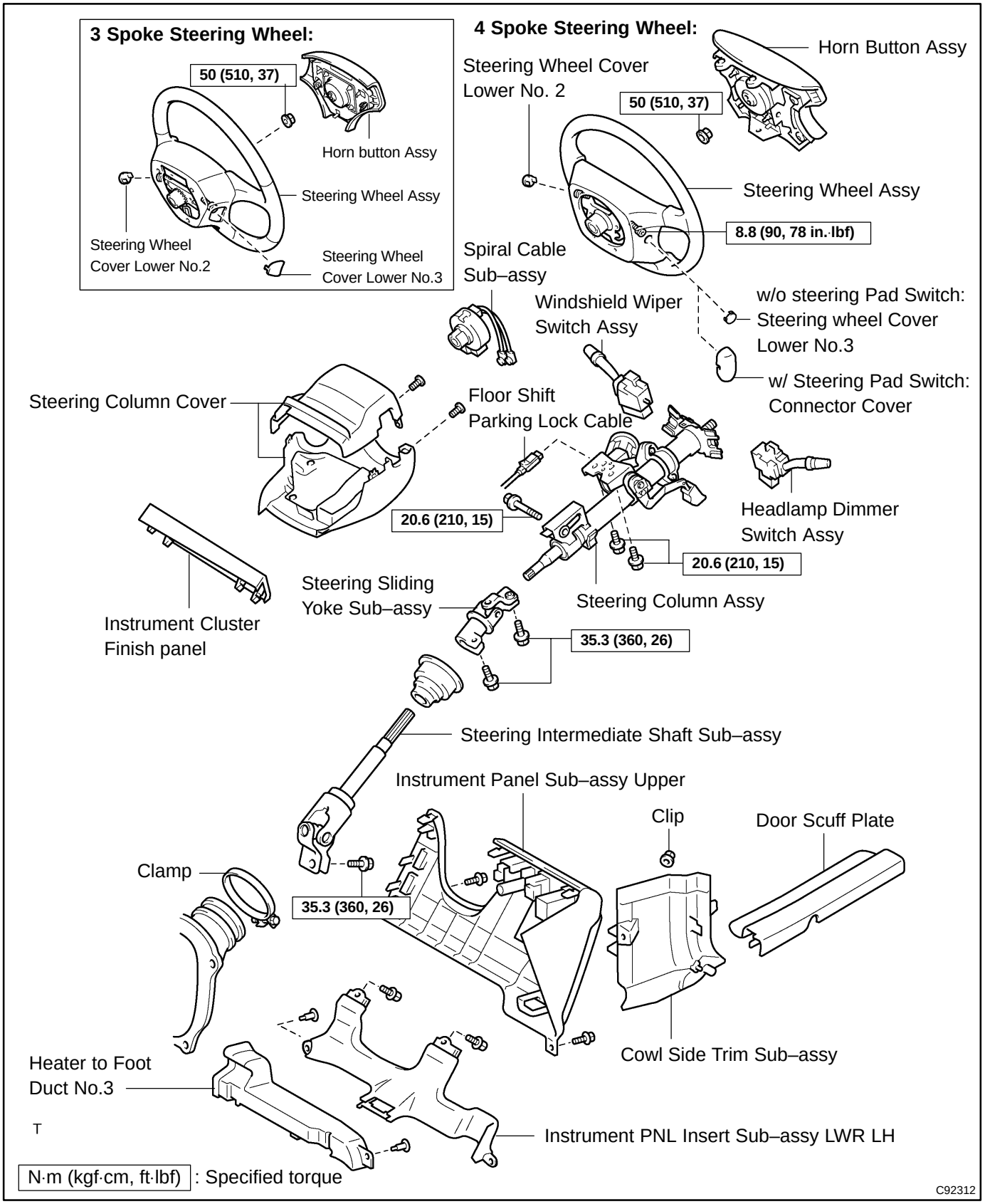

TMC Made:

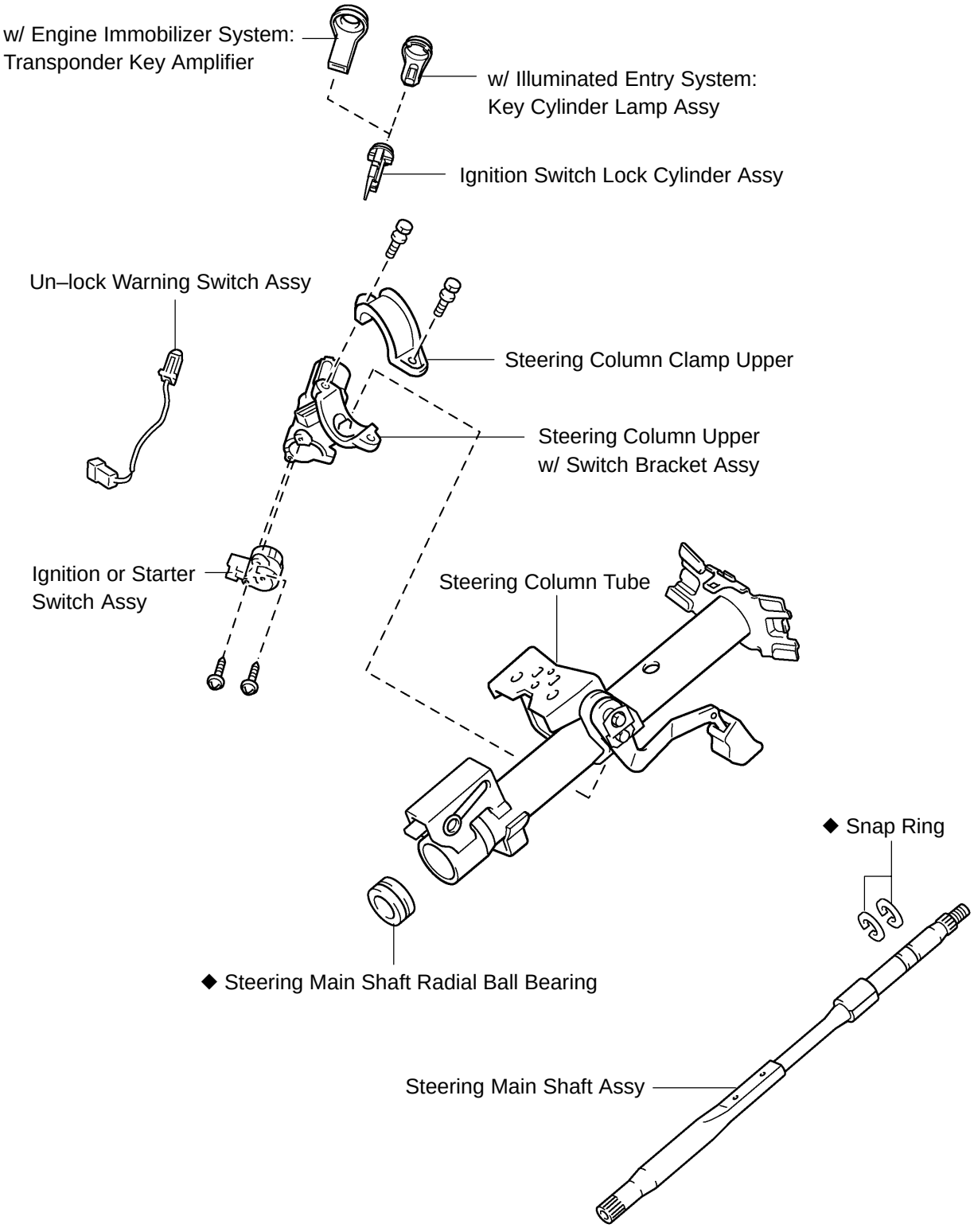
w/ Engine Immobilizer System:
Transponder Key Amplifier
w/ Illuminated Entry System:
Key Cylinder Lamp Assy
Ignition Switch Lock Cylinder Assy
Un–lock Warning Switch Assy
Steering Column Clamp Upper
Steering Column Upper
w/ Switch Bracket Assy
Ignition or Starter
Switch Assy
Steering Column Tube
◆ Snap Ring
◆ Steering Main Shaft Radial Ball Bearing
Steering Main Shaft Assy
T
◆ Non–reusable part
C92313

TMMK Made:

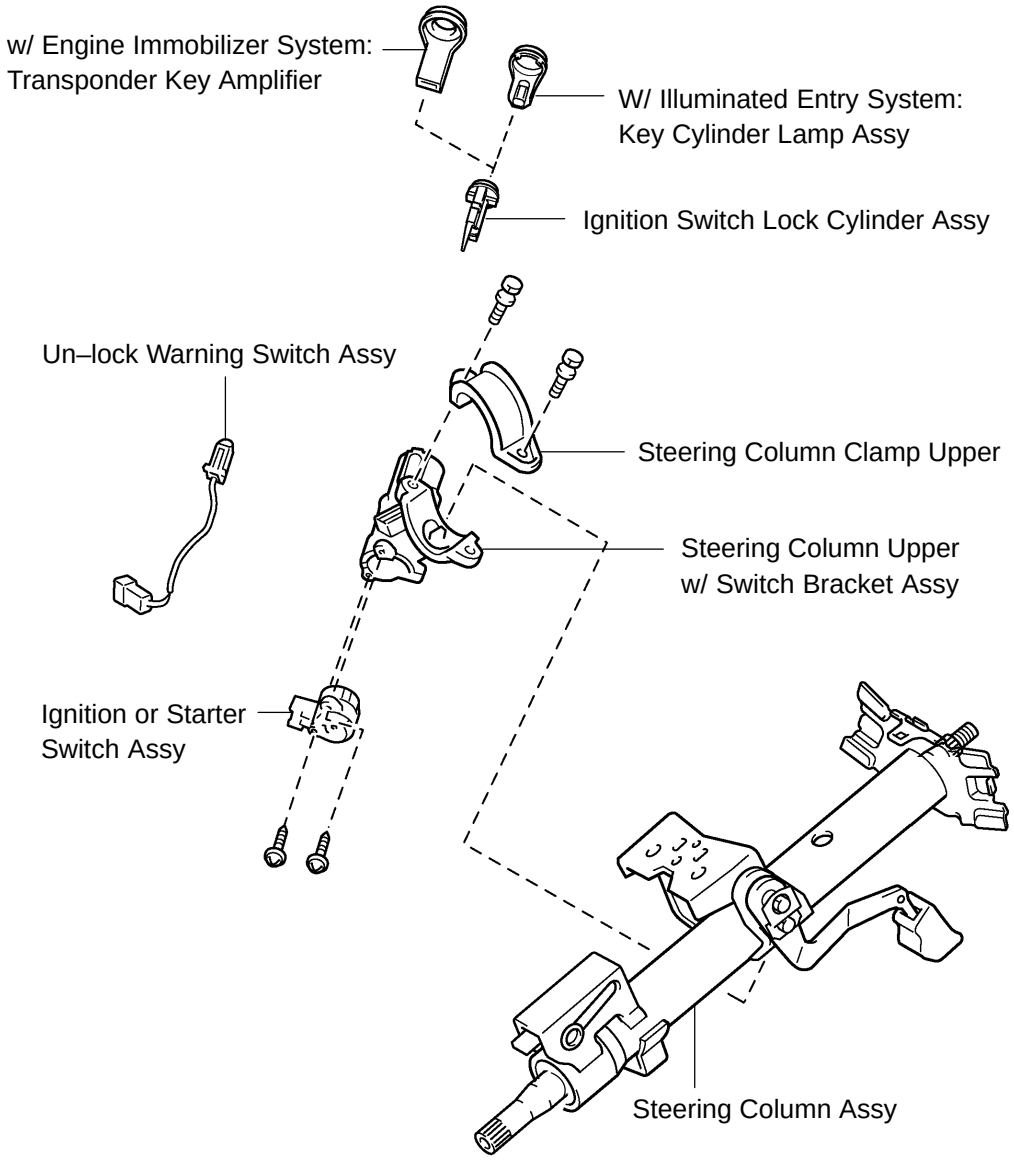

T

C92612

STEERING COLUMN ASSY (TMC MADE)

5002S–01

OVERHAUL

1. PRECAUTION(See page 50–1)
2. DISCONNECT BATTERY NEGATIVE TERMINAL
3. REMOVE STEERING WHEEL COVER LOWER NO.2
   (See page 50–6)
4. REMOVE STEERING WHEEL COVER LOWER NO.3(W/O STEERING PAD SWITCH 4 SPOKE STEERING WHEEL)
   (See page 50–6)
5. REMOVE CONNECTOR COVER(W/ STEERING PAD SWITCH 4 SPOKE STEERING WHEEL)
   (See page 50–6)
6. REMOVE STEERING WHEEL COVER LOWER NO.3(3 SPOKE STEERING WHEEL ASSY)
   (See page 50–6)
7. INSPECT PLACE FRONT WHEELS FACING STRAIGHT AHEAD

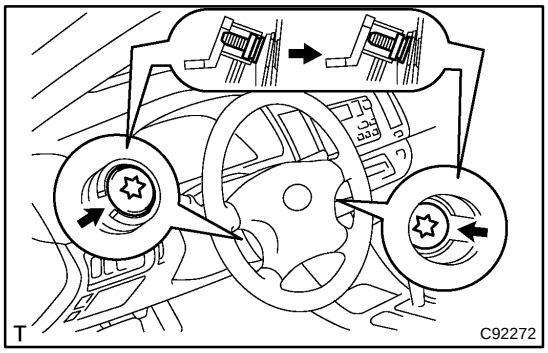

8. REMOVE HORN BUTTON ASSY

NOTICE:
If the airbag connector is disconnected with the ignition switch being at ON, DTCs will be recorded.

(a) Using a torx socket wrench, loosen the 2 torx screws until the groove along the screw circumference catches on the screw case.

(b) Pull out the horn button assy from the steering wheel.

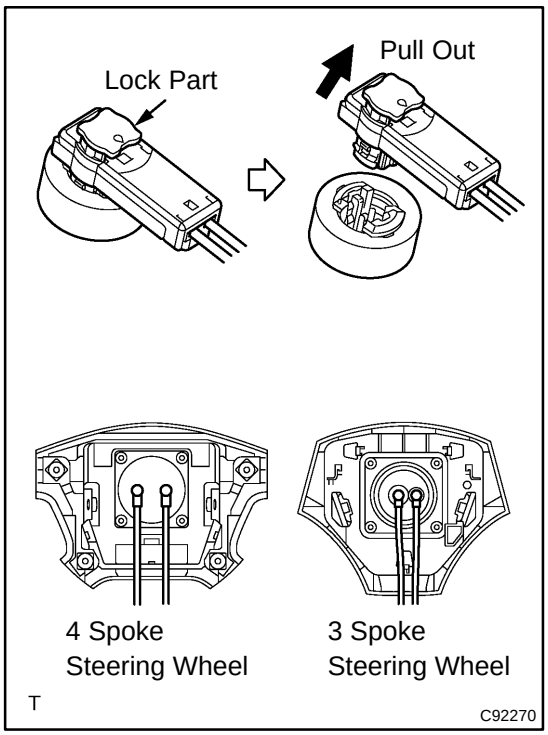

(c) Using a screwdriver, release the lock part of each airbag connector and disconnect the 2 airbag connectors.

(d) Disconnect the horn connector. (4 Spoke steering wheel)

NOTICE:
When removing the horn button assy, take care not to pull the airbag wire harness.

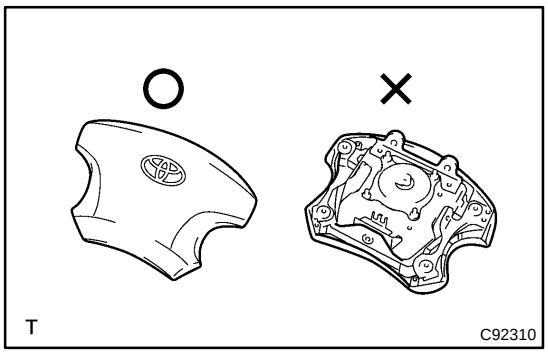

CAUTION:

- **When storing the horn button assy, keep the upper surface of the horn button assy facing upward.**
- **Never disassemble the horn button assy.**

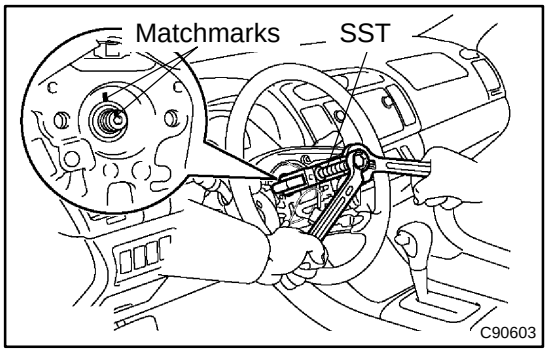

9. REMOVE STEERING WHEEL ASSY

(a) Disconnect the connector.
(b) Remove the steering wheel assy set nut.
(c) Place matchmarks on the steering wheel assy and main shaft assy.
(d) Using SST, remove the steering wheel assy.
SST 09950–50013 (09951–05010, 09952–05010, 09953–05020, 09954–05021)

10. REMOVE INSTRUMENT CLUSTER FINISH PANEL
(See page 71–12)

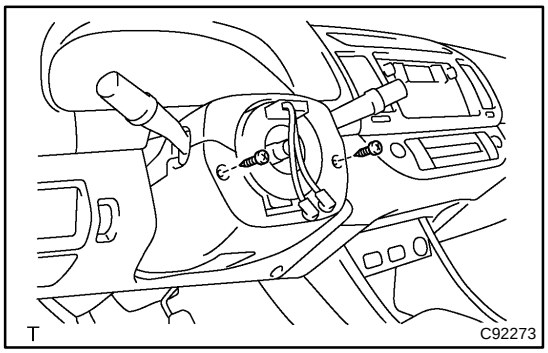

11. REMOVE STEERING COLUMN COVER

(a) Remove the 2 screws and steering column cover.

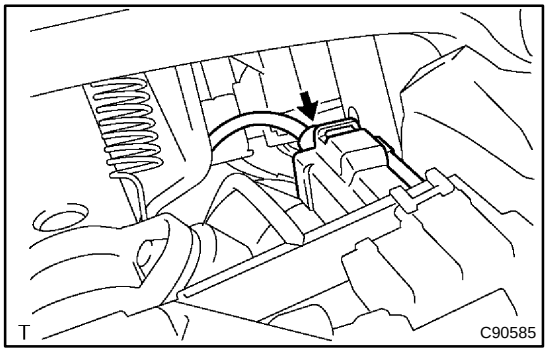

12. DISCONNECT FLOOR SHIFT PARKING LOCK CABLE ASSY

(a) Using a screwdriver, disconnect the floor shift parking lock cable from the upper bracket.

13. REMOVE SPIRAL CABLE SUB–ASSY
(See page 60–25)
14. REMOVE HEADLAMP DIMMER SWITCH ASSY

(a) Disconnect the connector and remove the headlamp dimmer switch assy.

15. REMOVE WINDSHIELD WIPER SWITCH ASSY

(a) Disconnect the connector and remove the windshield wiper switch assy.

16. REMOVE FRONT DOOR SCUFF PLATE LH
(See page 71–12)

17. REMOVE COWL SIDE TRIM SUB–ASSY LH
(See page 71–12)

18. REMOVE INSTRUMENT PANEL COIN BOX SUB–ASSY
(See page 71–12)

19. REMOVE INSTRUMENT PANEL SUB–ASSY UPPER
(See page 71–12)

20. REMOVE INSTRUMENT PNL INSERT SUB–ASSY LWR LH
(See page 71–12)

21. REMOVE HEATER TO FOOT DUCT NO.3
(See page 71–12)

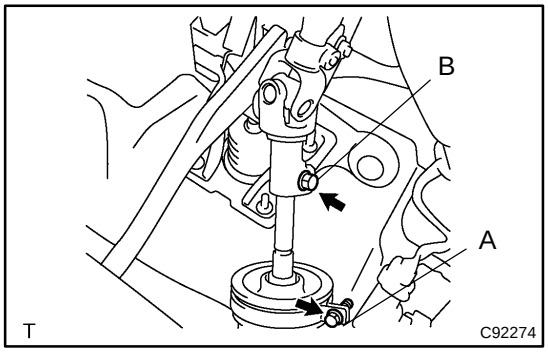

22. DISCONNECT STEERING INTERMEDIATE SHAFT SUB–ASSY

(a) Loosen the bolt A and remove the clamp from the steering column hole cover No.1.

(b) Separate the steering column hole cover No.2 from the steering column hole cover No.1.

(c) Loosen the bolt B.

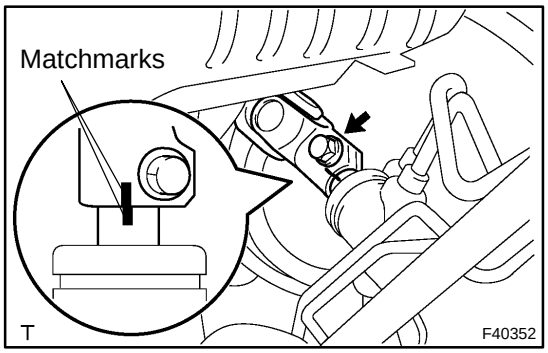

(d) Place matchmarks on the steering intermediate shaft sub–assy and steering gear assy.

(e) Remove the bolt and disconnect the steering intermediate shaft sub–assy.

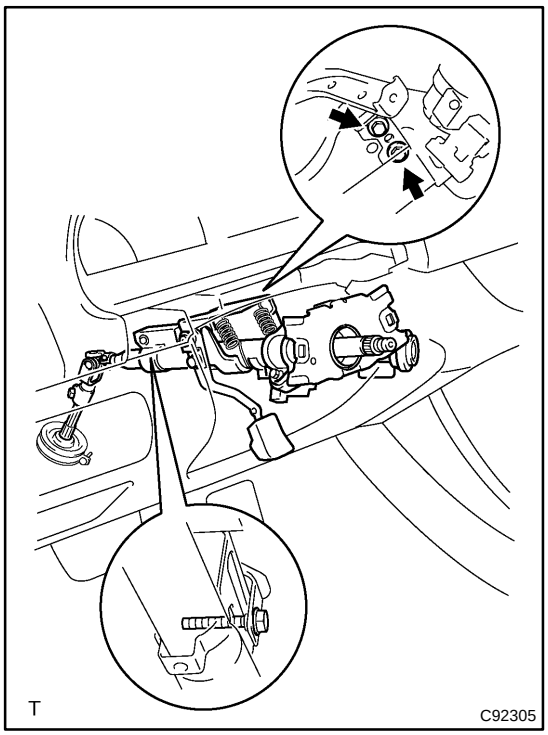

23. REMOVE STEERING COLUMN ASSY

(a) Disconnect the connectors and wire harness clamps from the steering column assy.
(b) Remove the 3 bolts and steering column assy.

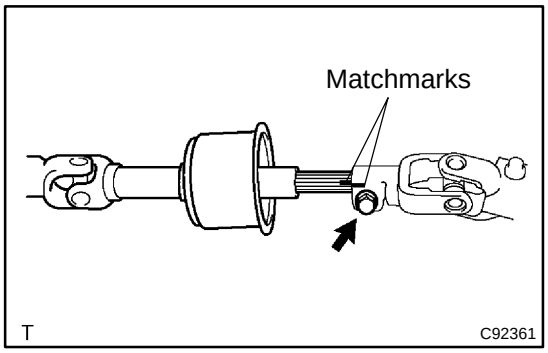

24. REMOVE STEERING INTERMEDIATE SHAFT SUB–ASSY

(a) Place matchmarks on the steering intermediate shaft sub–assy and steering sliding yoke sub–assy.
(b) Remove the bolt and steering intermediate shaft sub–assy.

25. REMOVE STEERING COLUMN HOLE COVER SUB–ASSY NO.2

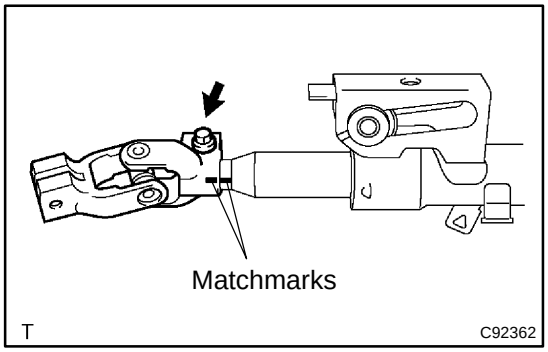

26. REMOVE STEERING SLIDING YOKE SUB–ASSY

(a) Place matchmarks on the steering sliding yoke sub–assy and steering main shaft assy.
(b) Remove the bolt and steering sliding yoke sub–assy from the steering main shaft assy.

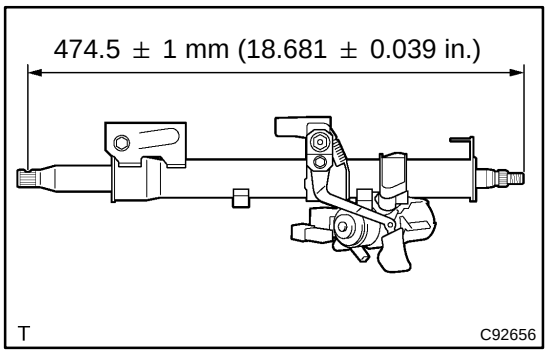

27. INSPECT STEERING COLUMN ASSY

(a) Measure the length of steering main shaft.
Standard length: 474.5 ± 1 mm (18.681 ± 0.039 in.)

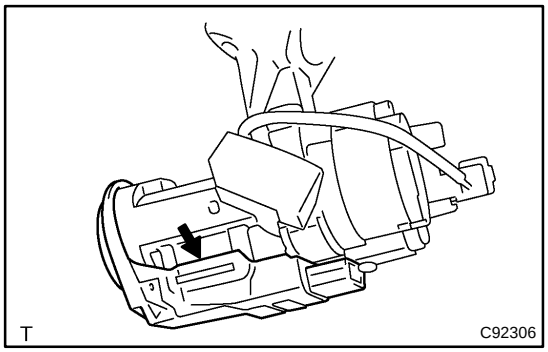

28. REMOVE TRANSPONDER KEY AMPLIFIER(W/ ENGINE IMMOBILISER SYSTEM)

(a) Disengage the claw hung on the upper bracket with a screwdriver.
(b) Pull the transponder key amplifier toward the rear of the vehicle with the claw open.

NOTICE:
Take care not to apply excessive force to prevent the case from being damaged.

29. REMOVE KEY CYLINDER LAMP ASSY(W/ ILLUMINATED ENTRY SYSTEM)

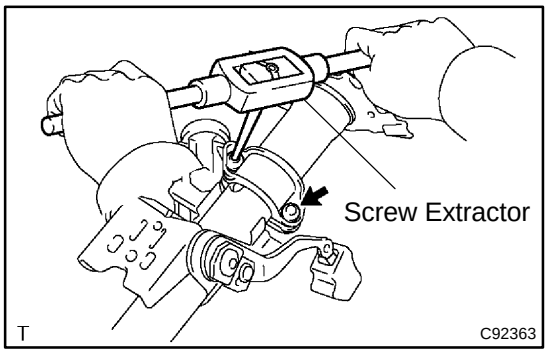

30. REMOVE STEERING COLUMN UPPER W/SWITCH BRACKET ASSY

(a) Using a centering punch, mark the center of the 2 lapered–head bolts.
(b) Using a 3 – 4 mm (0.12 – 0.16 in.) drill, drill into the 2 bolts.
(c) Using a screw extractor, remove the 2 bolts and steering column upper w/ switch bracket assy.

31. REMOVE STEERING COLUMN CLAMP UPPER

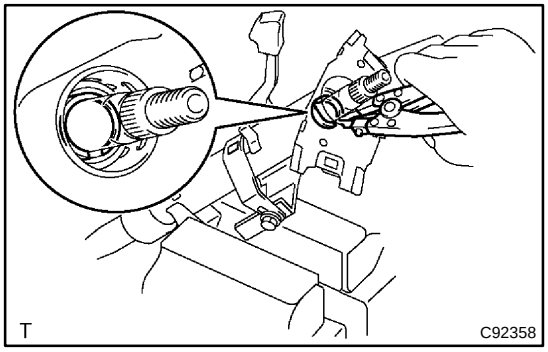

32. REMOVE STEERING MAIN SHAFT ASSY

(a) Using a snap ring expander, remove the steering main shaft snap ring (outer side).

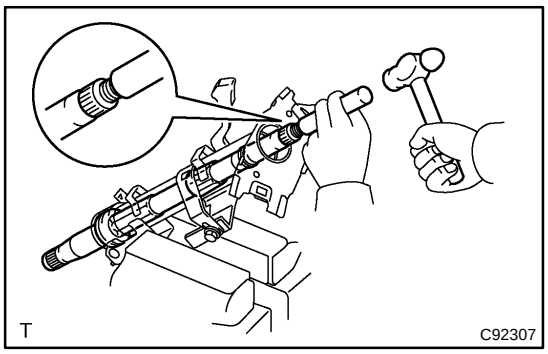

(b) Using a brass bar and a hammer, remove the steering main shaft assy and steering main shaft radial ball bearing.

NOTICE:

Be careful not to drop the steering main shaft assy.

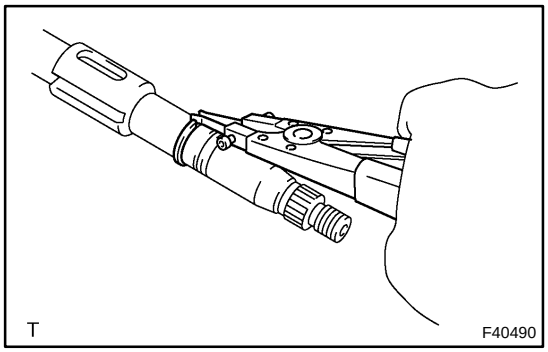

(c) Using a snap ring expander, remove the steering main shaft snap ring (inner side).

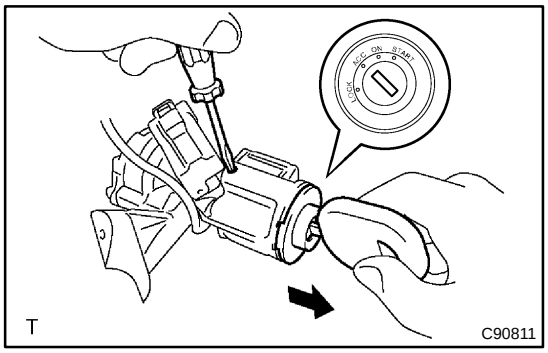

33. REMOVE IGNITION SWITCH LOCK CYLINDER ASSY

(a) Place the ignition switch lock cylinder assy at the ACC position.

(b) Push down the stop pin with a screwdriver, and pull out the cylinder assy.

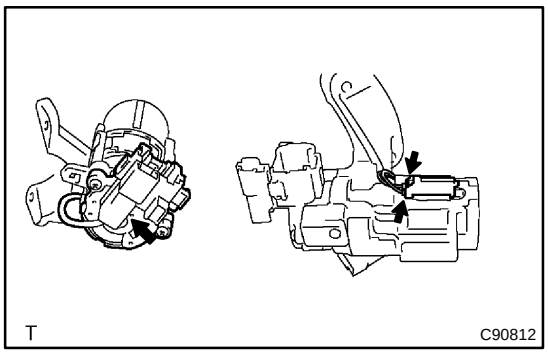

34. REMOVE UN–LOCK WARNING SWITCH ASSY

(a) Disconnect the un–lock warning switch assy connector from the ignition or starter switch assy.

(b) Remove the un–lock warning switch assy.

35. REMOVE IGNITION OR STARTER SWITCH ASSY

(a) Remove the 2 screws and ignition or starter switch assy from the steering column bracket assy.

36. INSTALL IGNITION OR STARTER SWITCH ASSY

(a) Install the ignition or starter switch assy to the steering column bracket assy with the 2 screws.

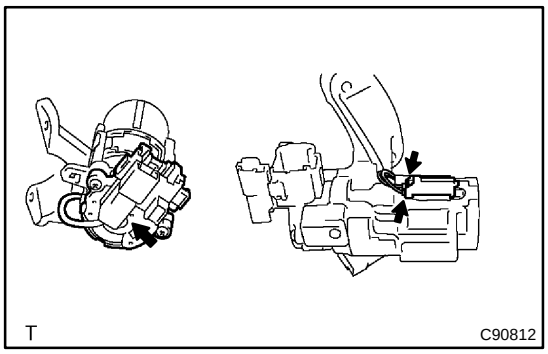

37. INSTALL UN–LOCK WARNING SWITCH ASSY

(a) Install the un–lock warning switch assy.
(b) Connect the un–lock warning switch assy connector to the ignition or starter switch assy.

38. INSTALL IGNITION SWITCH LOCK CYLINDER ASSY

(a) Make sure that the ignition switch lock cylinder assy is at the ACC position.
(b) Install the ignition switch lock cylinder assy.

39. INSPECT STEERING LOCK OPERATION

(a) Check that the steering lock mechanism is activated when removing the key.
(b) Check that the steering lock mechanism is deactivated when inserting the key and turning it to ACC position.

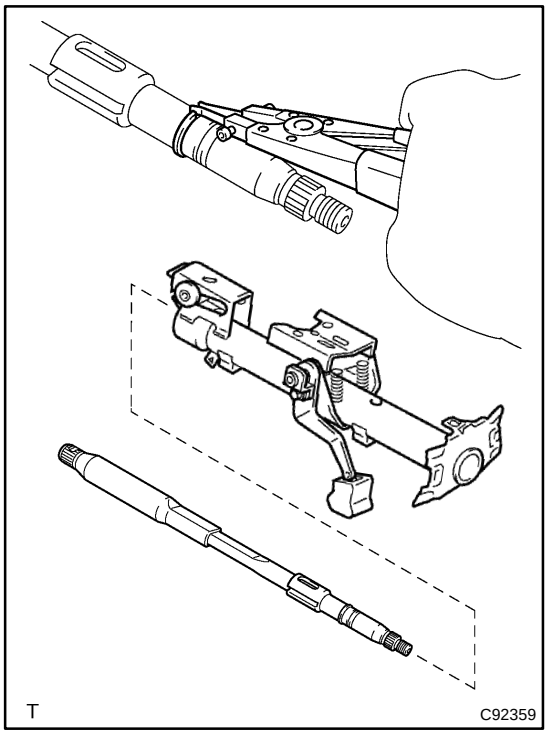

40. INSTALL STEERING MAIN SHAFT ASSY

(a) Using a snap ring expander, install a new steering main shaft snap ring (inner side) to the steering main shaft assy.
(b) Install the steering main shaft assy to the steering column tube.

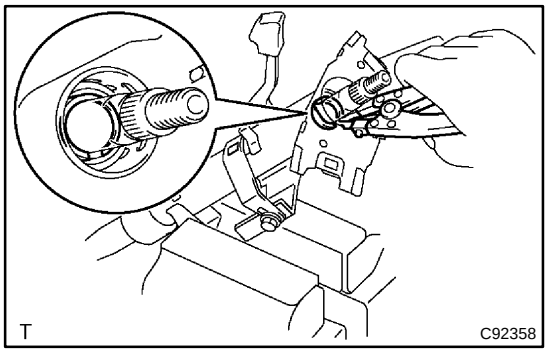

(c) Using a snap ring expander, install a new steering main shaft snap ring (outer side) to the steering main shaft assy.

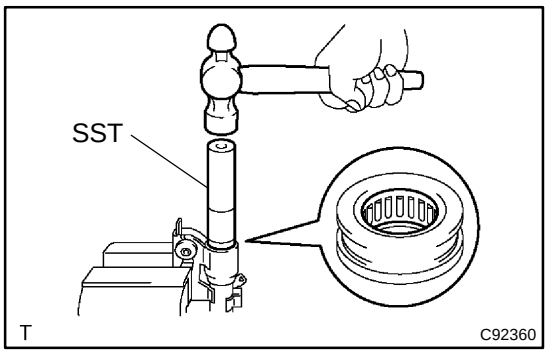

41. INSTALL STEERING MAIN SHAFT RADIAL BALL BEARING

(a) Using SST and a hammer, install a new steering main radial ball bearing.
SST 09608–06041

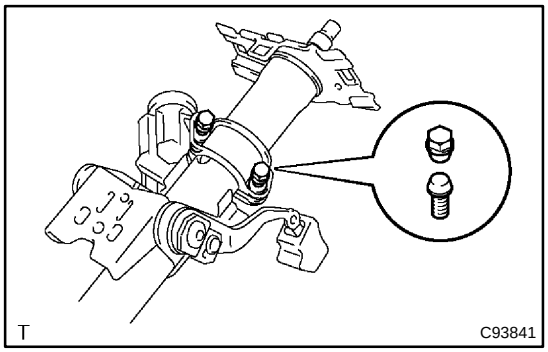

42. INSTALL STEERING COLUMN UPPER W/SWITCH BRACKET ASSY

(a) Temporarily install the steering column upper w/switch bracket assy and steering column upper clamp with 2 new tapered–head bolts.
(b) Tighten the 2 tapered–head bolts until the bolt heads break off.

43. INSTALL KEY CYLINDER LAMP ASSY(W/ ILLUMINATED ENTRY SYSTEM)

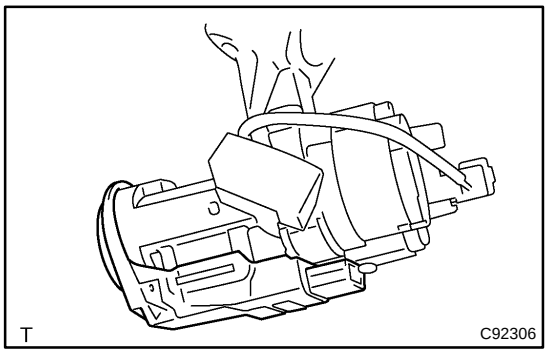

44. INSTALL TRANSPONDER KEY AMPLIFIER(W/ ENGINE IMMOBILISER SYSTEM)

(a) Align the transponder key amplifier with the installation position of the upper bracket with the amplifier inclined.
(b) Push the trasponder key amplifier up and connect it to the upper bracket.

NOTICE:
Take care not to push the amplifier up with excessive force to prevent it from being damaged.

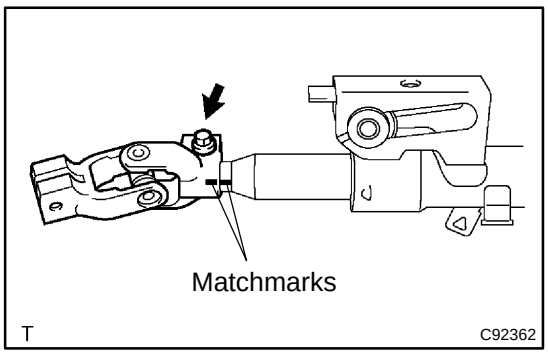

45. INSTALL STEERING SLIDING YOKE SUB–ASSY

(a) Align the matchmark with the one on the steering sliding yoke sub–assy and steering main shaft assy.
(b) Install the steering sliding yoke sub–assy with the bolt.
Torque: 35.3 N·m (360 kgf·cm, 26 ft·lbf)

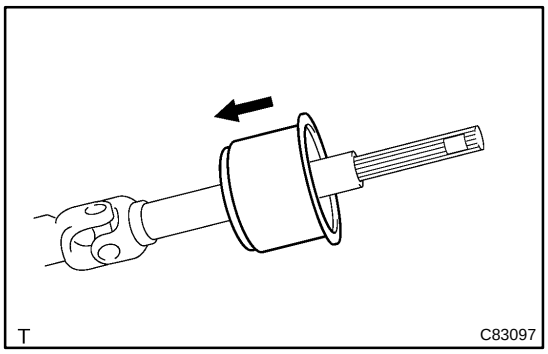

46. INSTALL STEERING COLUMN HOLE COVER SUB–ASSY NO.2

(a) Install the steering column hole cover sub–assy No.2 to the steering intermediate shaft sub–assy.

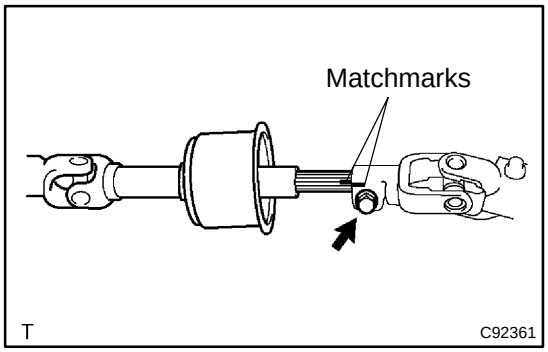

47. INSTALL STEERING INTERMEDIATE SHAFT SUB–ASSY

(a) Align the matchmark with the one on the steering intermediate shaft sub–assy and steering main shaft assy.
(b) Temporarily install the steering intermediate shaft sub–assy with the bolt.

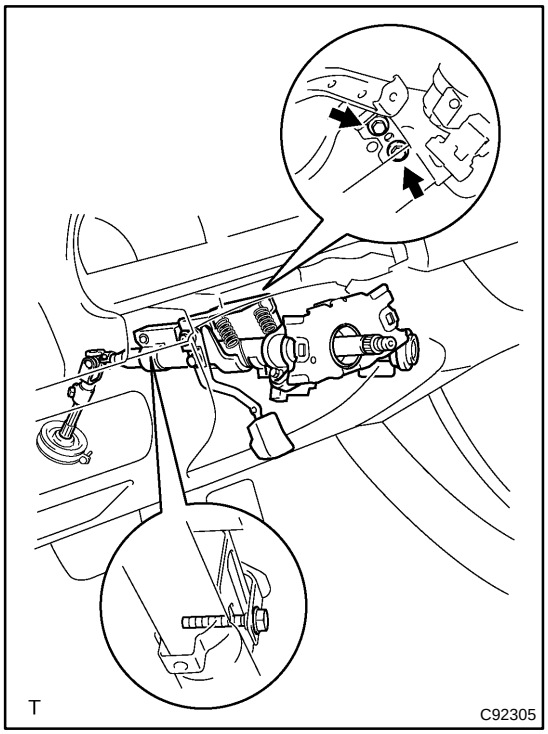

48. INSTALL STEERING COLUMN ASSY

(a) Install the steering column assy with the 3 bolts.
Torque: 20.6 N·m (210 kgf·cm, 15 ft·lbf)
(b) Connect the connectors and wire harness clamps.

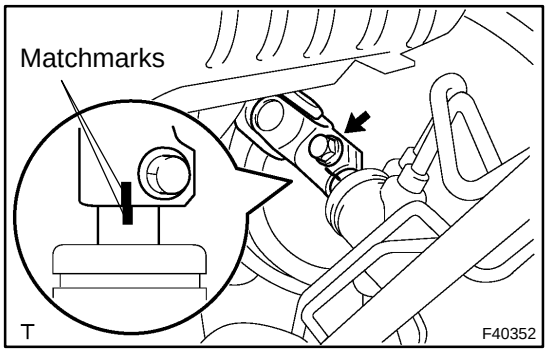

49. CONNECT STEERING INTERMEDIATE SHAFT SUB–ASSY

(a) Align the matchmarks on the intermediate shaft sub–assy and steering gear assy.
(b) Install the steering intermediate shaft sub–assy with the bolt.
Torque: 35.3 N·m (360 kgf·cm, 26 ft·lbf)

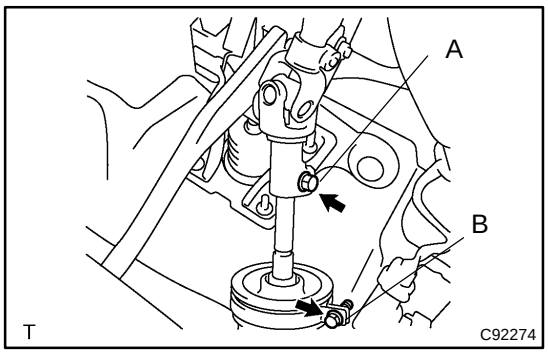

(c) Tighten the bolt A.
Torque: 35.3 N·m (360 kgf·cm, 26 ft·lbf)
(d) Install the steering column hole cover No. 2 to the steering hole cover No.1.
(e) Connect the clamp to the steering column hole cover No.1 and tighten the bolt B.

50. INSTALL WINDSHIELD WIPER SWITCH ASSY

(a) Install the windshield wiper switch assy and connect the connector.

51. INSTALL HEADLAMP DIMMER SWITCH ASSY

(a) Install the headlamp dimmer switch assy and connect the connector.

52. PLACE FRONT WHEELS FACING STRAIGHT AHEAD

53. INSTALL SPIRAL CABLE SUB–ASSY
(See page 60–25)

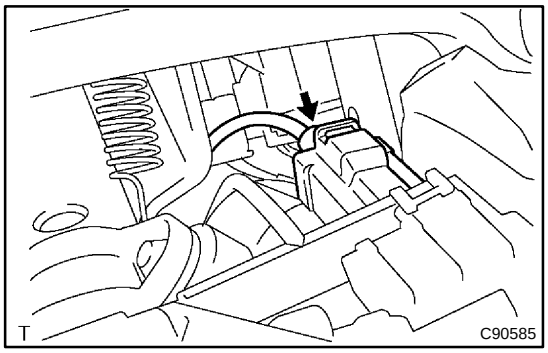

54. CONNECT FLOOR SHIFT PARKING LOCK CABLE ASSY

(a) Turn the ignition switch to ACC or ON.
(b) Connect the cable to the upper bracket.

55. CHECK KEY INTERLOCK OPERATION(See page 40–37)

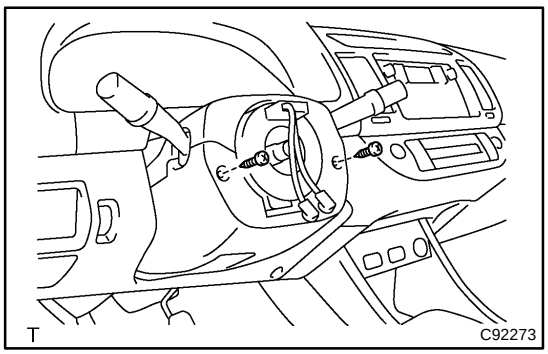

56. INSTALL STEERING COLUMN COVER

(a) Install the steering column cover with the 2 screws.

57. INSTALL INSTRUMENT CLUSTER FINISH PANEL

58. INSTALL HEATER TO FOOT DUCT NO.3

59. INSTALL INSTRUMENT PNL INSERT SUB–ASSY LWR LH

60. INSTALL INSTRUMENT PANEL SUB–ASSY UPPER

61. INSTALL INSTRUMENT PANEL COIN BOX SUB–ASSY

62. INSTALL COWL SIDE TRIM SUB–ASSY LH

63. INSTALL FRONT DOOR SCUFF PLATE LH

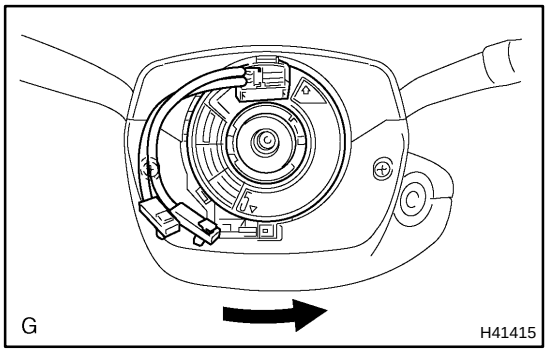

64. CENTER SPIRAL CABLE

(a) Check that the ignition switch is at OFF.

(b) Check that the battery negative terminal is disconnected.

NOTICE:

Do not start the operation for 90 seconds after removing the terminal.

(c) Turn the cable counterclockwise by hand until it becomes harder to turn.

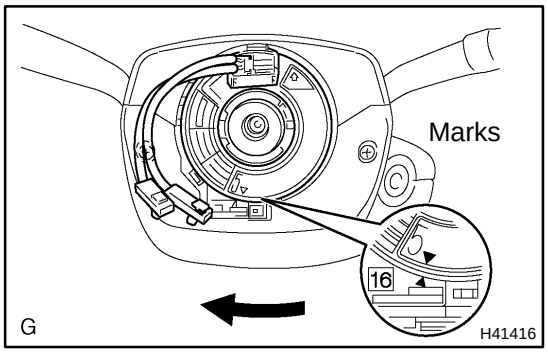

(d) Then rotate the cable clockwise about 2.5 turns to align the marks.

HINT:

The cable will rotate about 2.5 turns to both right and left of the center.

65. INSTALL STEERING WHEEL ASSY

(a) Align the matchmark with the one on the steering wheel assy and steering main shaft assy.

(b) Install the steering wheel assy with the set nut.

Torque: 50 N·m (510 kgf·cm, 37 ft·lbf)

(c) Connect the connector.

66. INSPECT HORN BUTTON ASSY

(See page 60–15)

67. INSTALL HORN BUTTON ASSY

NOTICE:

- **Never use the airbag parts removed from another vehicle. When replacing parts, replace with new ones.**
- **Make sure that the horn button assy is installed with the specified torque.**
- **If the horn button assy has been dropped, or there are cracks, dents or other defects in the case or connector, replace the horn button assy with a new one.**
- **When installing the horn button assy, take care so that the wirings do not interfere with other parts and that they are not pinched between other parts.**

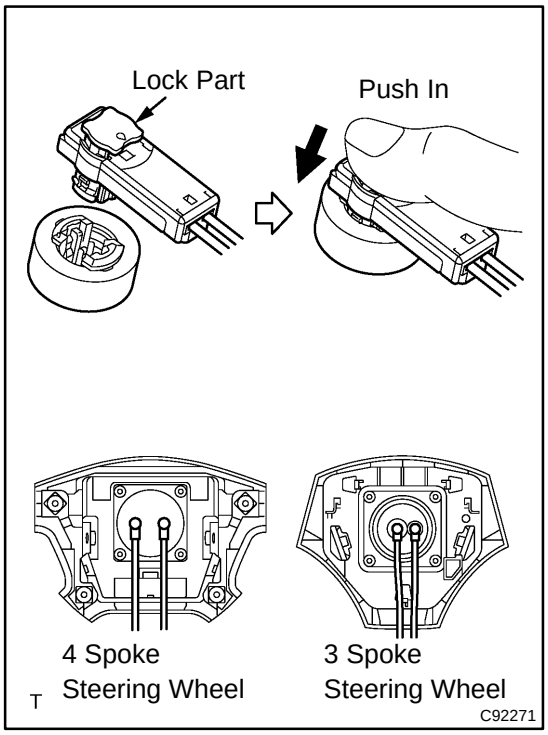

(a) Connect the 2 airbag connectors.
(b) Connect the horn connector. (4 Spoke steering wheel)

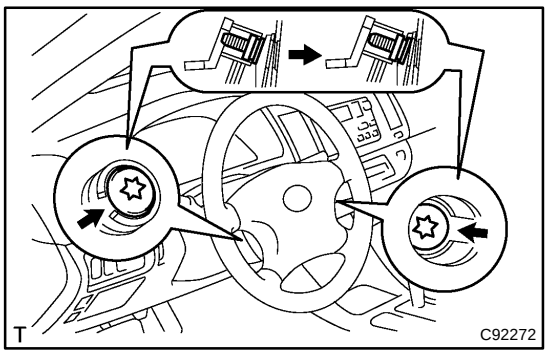

(c) Install the horn button assy after confirming that the circumference groove of the torx screws is caught on the screw case.
(d) Using a torx socket wrench, torque the 2 screws.
Torque: 8.8 N·m (90 kgf·cm, 78 in.·lbf)

68. INSTALL STEERING WHEEL COVER LOWER NO.2
(See page 50–6)

69. INSTALL STEERING WHEEL COVER LOWER NO.3(W/O STEERING PAD SWITCH 4 SPOKE STEERING WHEEL)
(See page 50–6)

70. INSTALL CONNECTOR COVER(W/ STEERING PAD SWITCH 4 SPOKE STEERING WHEEL) (See page 50–6)

71. INSTALL STEERING WHEEL COVER LOWER NO.3(3 SPOKE STEERING WHEEL ASSY) (See page 50–6)

72. INSPECT STEERING WHEEL CENTER POINT

73. INSPECT SRS WARNING LIGHT(See page 05–690)

STEERING COLUMN ASSY (TMMK MADE)

5002T–01

OVERHAUL

1. PRECAUTION(See page 50–1)
2. SEPARATE BATTERY NEGATIVE TERMINAL
3. REMOVE STEERING WHEEL COVER LOWER NO.2
   (See page 50–6)
4. REMOVE STEERING WHEEL COVER LOWER NO.3(W/O STEERING PAD SWITCH 4 SPOKE STEERING WHEEL)
   (See page 50–6)
5. REMOVE CONNECTOR COVER(W/ STEERING PAD SWITCH 4 SPOKE STEERING WHEEL)
   (See page 50–6)
6. REMOVE STEERING WHEEL COVER LOWER NO.3(3 SPOKE STEERING WHEEL ASSY)
   (See page 50–6)
7. PLACE FRONT WHEELS FACING STRAIGHT AHEAD

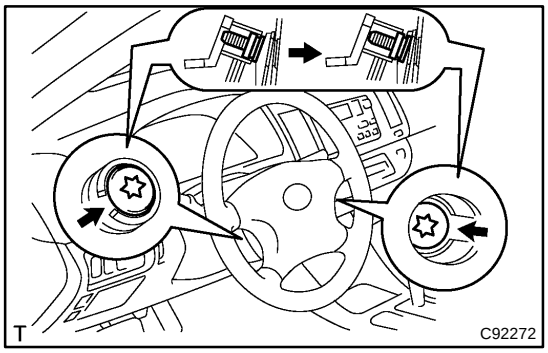

8. REMOVE HORN BUTTON ASSY

NOTICE:
If the airbag connector is disconnected with the ignition switch at ON, DTCs will be recorded.

(a) Using a torx socket wrench, loosen the 2 torx screws until the groove along the screw circumference catches on the screw case.

(b) Pull out the horn button assy from the steering wheel.

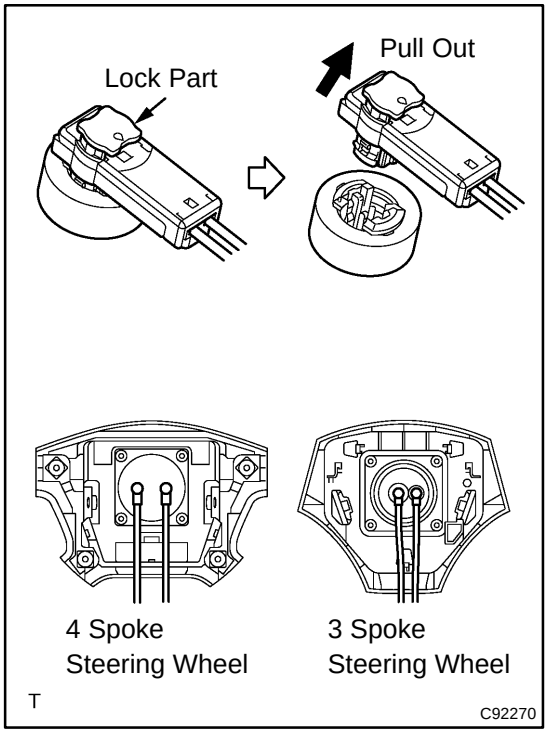

(c) Using a scrwdriver, release the lock part of each airbag connector and disconnect the 2 airbag connectors.

(d) Disconnect the horn connector. (4 Spoke steering wheel)

NOTICE:
When removing the horn button assy, take care not to pull the airbag wire harness.

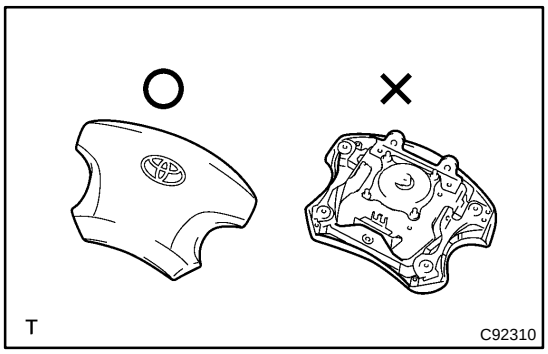

CAUTION:

- **When storing the horn button assy, keep the upper surface of the pad facing upward.**
- **Never disassemble the horn button assy.**

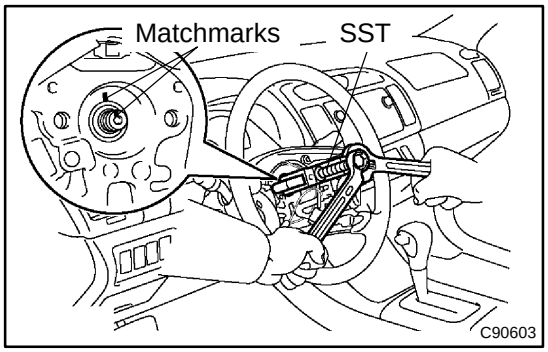

9. REMOVE STEERING WHEEL ASSY

SST 09950–50013 (09951–05010, 09952–05010, 09953–05020, 09954–05021)

10. REMOVE INSTRUMENT CLUSTER FINISH PANEL ASSY
(See page 71–12)

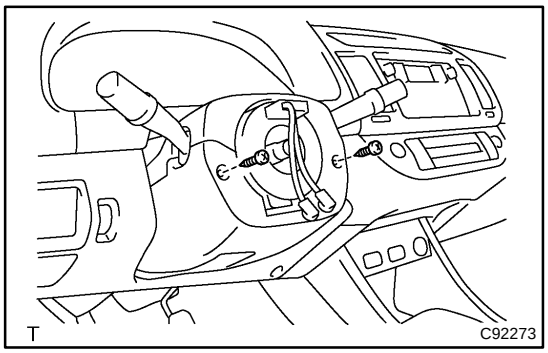

11. REMOVE STEERING COLUMN COVER LWR

(a) Remove the 2 screws and steering column cover upper.

12. REMOVE STEERING COLUMN COVER UPR

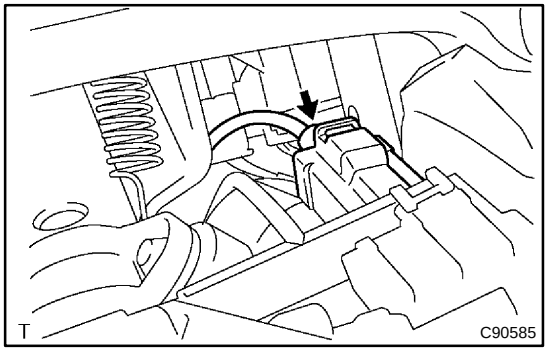

13. DISCONNECT FLOOR SHIFT PARKING LOCK CABLE ASSY

(a) Using a screwdriver, disconnect the floor shift parking lock cable from the upper bracket.

14. REMOVE SPIRAL CABLE SUB–ASSY
(See page 60–25)

15. REMOVE HEADLAMP DIMMER SWITCH ASSY

(a) Disconnect the connector and remove the headlamp dimmer switch assy.

16. REMOVE WINDSHIELD WIPER SWITCH ASSY

(a) Disconnect the connector and remove the windshield wiper switch assy.

17. REMOVE FRONT DOOR SCUFF PLATE LH
(See page 71–12)

18. REMOVE COWL SIDE TRIM SUB–ASSY LH
(See page 71–12)

19. REMOVE INSTRUMENT PANEL FINISH LOWER PANEL LH
(See page 71–12)

20. REMOVE INSTRUMENT PNL INSERT SUB–ASSY LWR LH
(See page 71–12)

21. REMOVE HEATER TO FOOT DUCT NO.3
(See page 71–12)

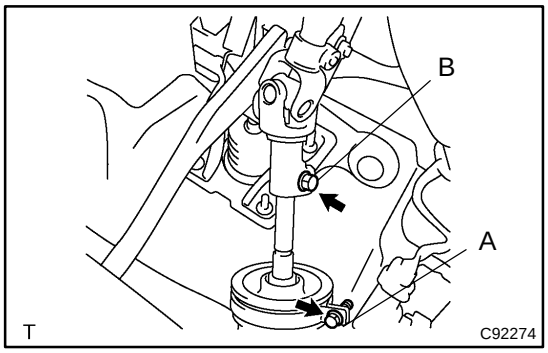

22. DISCONNECT STEERING INTERMEDIATE SHAFT ASSY

(a) Loosen the bolt A and remove the clamp from the steering column hole cover No.1.
(b) Separate the steering column hole cover No.2 from the steering column hole cover No.1.
(c) Loosen the bolt B.

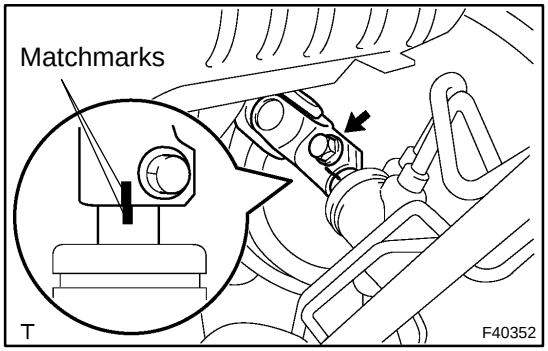

(d) Place matchmarks on the steering intermediate shaft sub–assy and steering gear assy.
(e) Remove the bolt and disconnect the steering intermediate shaft sub–assy.

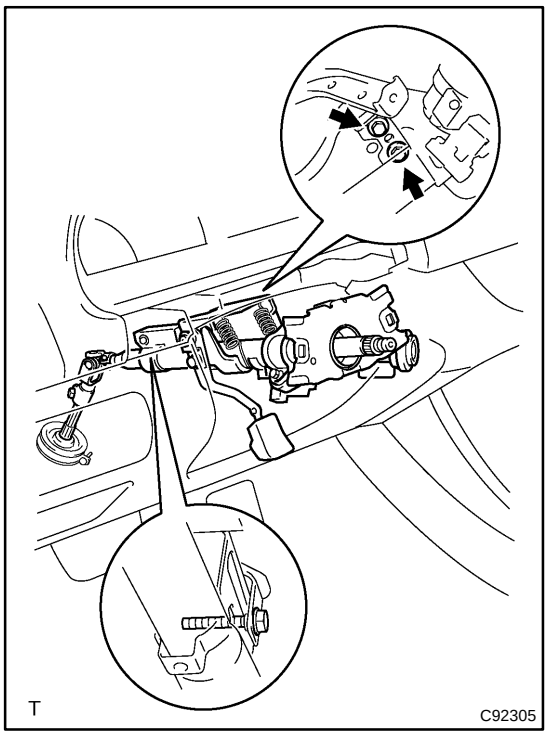

23. REMOVE STEERING COLUMN ASSY

(a) Disconnect the connectors and wire harness clamps from the steering column assy.
(b) Remove the 3 bolts and steering column assy.

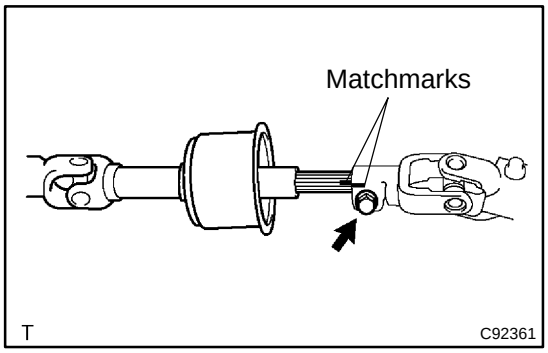

24. REMOVE STEERING INTERMEDIATE SHAFT ASSY

(a) Place matchmarks on the steering intermediate shaft sub–assy and steering sliding yoke sub–assy.
(b) Remove the bolt and steering intermediate shaft sub–assy.

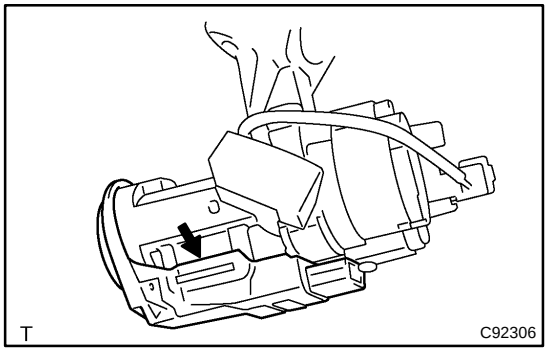

25. REMOVE TRANSPONDER KEY AMPLIFIER(W/ ENGINE IMMOBILISER SYSTEM)

(a) Disengage the claw hung on the upper bracket with a screwdriver.
(b) Pull the transponder key amplifier toward the rear of the vehicle with the claw open.

NOTICE:
Take care not to apply excessive force to prevent the case from being damaged.

26. REMOVE KEY CYLINDER LAMP ASSY(W/ ILLUMINATED ENTRY SYSTEM)

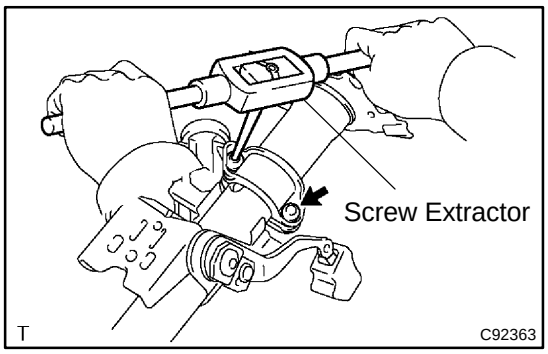

27. REMOVE STEERING COLUMN UPPER W/SWITCH BRACKET ASSY

(a) Using a centering punch, mark the center of the 2 lapered–head bolts.
(b) Using a 3 – 4 mm (0.12 – 0.16 in.) drill, drill into the 2 bolts.
(c) Using a screw extractor, remove the 2 bolts and steering column upper w/ switch bracket assy.

28. REMOVE STEERING COLUMN CLAMP UPPER

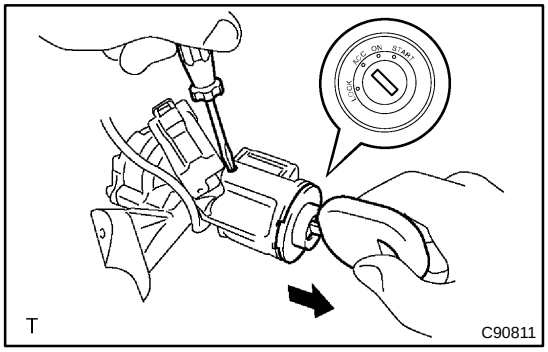

29. REMOVE IGNITION SWITCH LOCK CYLINDER ASSY

(a) Place the ignition switch lock cylinder assy at the ACC position.
(b) Push down the stop pin with a screwdriver, and pull out the cylinder assy.

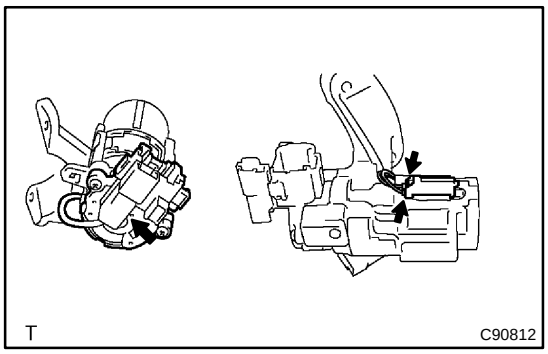

30. REMOVE UN–LOCK WARNING SWITCH ASSY

(a) Disconnect the un–lock warning switch assy connector from the ignition or starter switch assy.
(b) Remove the un–lock warning switch assy.

31. REMOVE IGNITION OR STARTER SWITCH ASSY

(a) Remove the 2 screws and ignition or starter switch assy from the steering column bracket assy.

32. INSTALL IGNITION OR STARTER SWITCH ASSY

(a) Install the ignition or starter switch assy to the steering column bracket assy with the 2 screws.

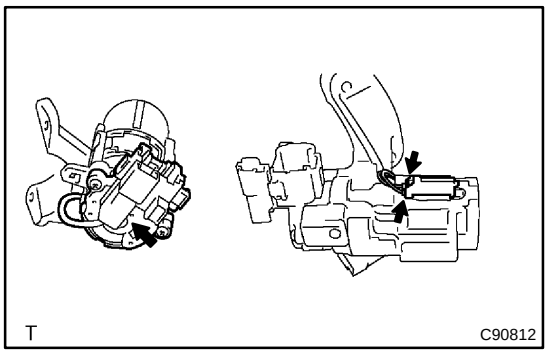

33. INSTALL UN–LOCK WARNING SWITCH ASSY

(a) Install the un–lock warning switch assy.
(b) Connect the un–lock warning switch assy connector to the ignition or starter switch assy.

34. INSTALL IGNITION SWITCH LOCK CYLINDER ASSY

(a) Make sure that the ignition switch lock cylinder assy is at the ACC position.
(b) Install the ignition switch lock cylinder assy.

35. INSPECT STEERING LOCK OPERATION

(a) Check that the steering lock mechanism is activated when removing the key.
(b) Check that the steering lock mechanism is deactivated when inserting the key and turning it to ACC position.

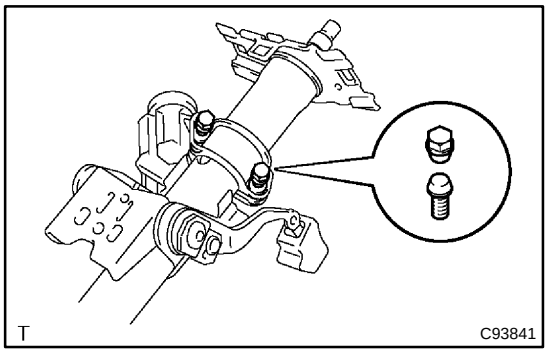

36. INSTALL STEERING COLUMN UPPER W/SWITCH BRACKET ASSY

(a) Temporarily install the steering column upper w/switch bracket assy and steering column upper clamp with 2 new tapered–head bolts.
(b) Tighten the 2 tapered–head bolts until the bolt heads break off.

37. INSTALL KEY CYLINDER LAMP ASSY(W/ ILLUMINATED ENTRY SYSTEM)

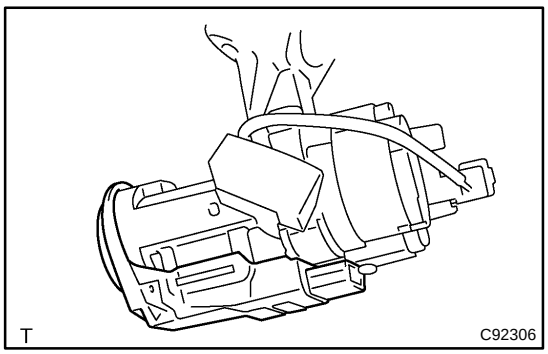

38. INSTALL TRANSPONDER KEY AMPLIFIER(W/ ENGINE IMMOBILISER SYSTEM)

(a) Align the transponder key amplifier with the installation position of the upper bracket with the amplifier inclined.
(b) Push the trasponder key amplifier up and connect it to the upper bracket.

NOTICE:

Take care not to push the amplifier up with excessive force to prevent it from being damaged.

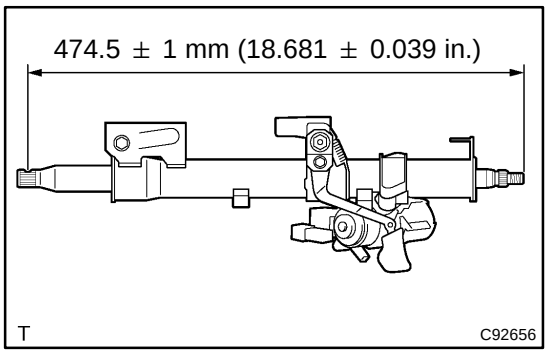

39. INSPECT STEERING COLUMN ASSY

(a) Measure the length of steering main shaft.
Standard length: 474.5 ± 1 mm (18.681 ± 0.039 in.)

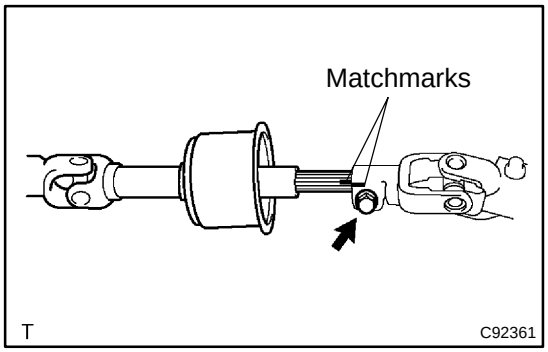

40. INSTALL STEERING INTERMEDIATE SHAFT ASSY

(a) Align the matchmark with the one on the steering intermediate shaft sub–assy and steering main shaft assy.
(b) Temporarily install the steering intermediate shaft sub–assy with the bolt.

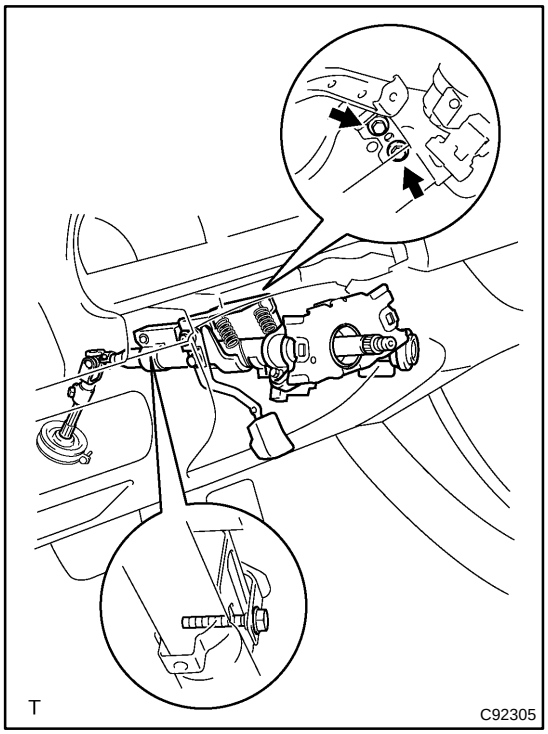

41. INSTALL STEERING COLUMN ASSY

(a) Install the steering column assy with the 3 bolts.
Torque: 20.6 N·m (210 kgf·cm, 15 ft·lbf)
(b) Connect the connectors and wire harness clamps.

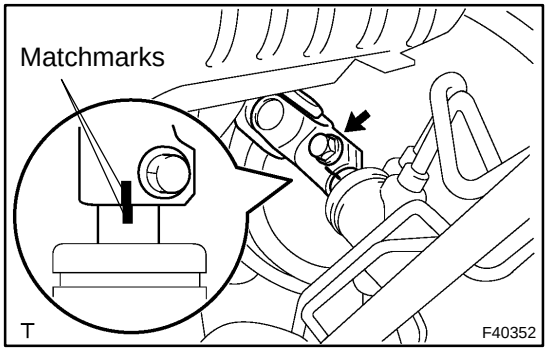

42. CONNECT STEERING INTERMEDIATE SHAFT ASSY

(a) Align the matchmarks on the intermediate shaft sub–assy and steering gear assy.
(b) Install the steering intermediate shaft sub–assy with the bolt.
Torque: 35.3 N·m (360 kgf·cm, 26 ft·lbf)

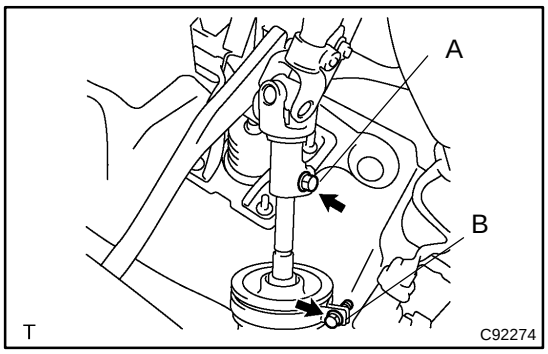

(c) Tighten the bolt A.
Torque: 35.3 N·m (360 kgf·cm, 26 ft·lbf)
(d) Install the steering column hole cover No. 2 to the steering hole cover No.1.
(e) Connect the clamp to the steering column hole cover No.1 and tighten the bolt B.

43. INSTALL HEADLAMP DIMMER SWITCH ASSY

(a) Install the windshield wiper switch assy and connect the connector.

44. INSTALL WINDSHIELD WIPER SWITCH ASSY

(a) Install the headlamp dimmer switch assy and connect the connector.

45. PLACE FRONT WHEELS FACING STRAIGHT AHEAD

46. INSTALL SPIRAL CABLE SUB–ASSY
(See page 60–25)

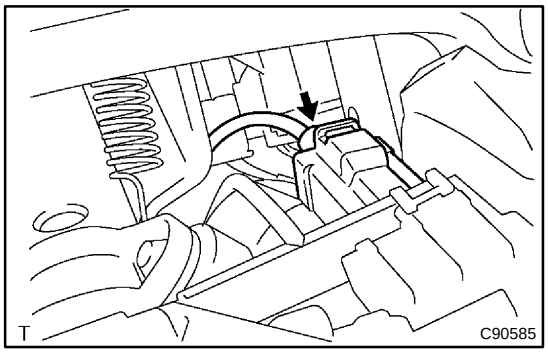

47. CONNECT FLOOR SHIFT PARKING LOCK CABLE ASSY

(a) Turn the ignition switch to ACC or ON.
(b) Connect the cable to the upper bracket.

48. CHECK KEY INTERLOCK OPERATION(See page 40–37)

49. INSTALL STEERING COLUMN COVER UPR

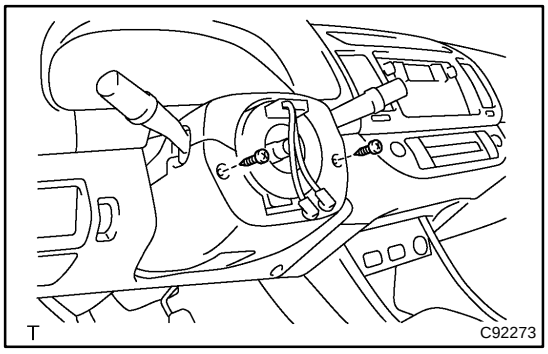

50. INSTALL STEERING COLUMN COVER LWR

(a) Install the steering column cover with the 2 screws.

51. INSTALL INSTRUMENT CLUSTER FINISH PANEL ASSY

52. INSTALL HEATER TO FOOT DUCT NO.3

53. INSTALL INSTRUMENT PNL INSERT SUB–ASSY LWR LH

54. INSTALL INSTRUMENT PANEL FINISH LOWER PANEL LH

55. INSTALL COWL SIDE TRIM SUB–ASSY LH

56. INSTALL FRONT DOOR SCUFF PLATE LH

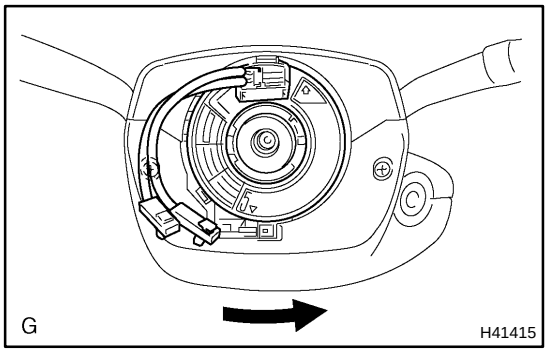

57. CENTER SPIRAL CABLE

(a) Check that the ignition switch is to OFF.

(b) Check that the battery negative terminal is disconnected.

NOTICE:

Do not start the operation for 90 seconds after removing the terminal.

(c) Turn the cable counterclockwise by hand until it becomes harder to turn.

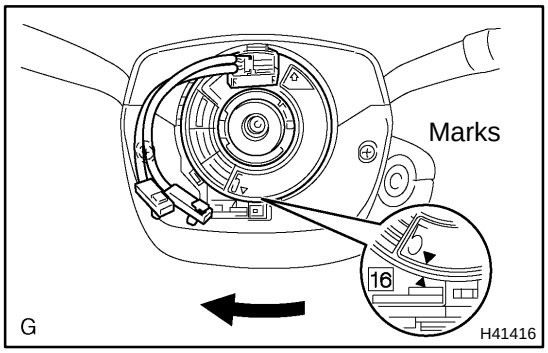

(d) Then rotate the cable clockwise about 2.5 turns to align the marks.

HINT:

The cable will rotate about 2.5 turns to both right and left of the center.

58. INSTALL STEERING WHEEL ASSY

(a) Align the matchmark with the one on the steering wheel assy and steering main shaft assy.

(b) Install the steering wheel assy with the set nut.

Torque: 50 N·m (510 kgf·cm, 37 ft·lbf)

(c) Connect the connector.

59. INSPECT HORN BUTTON ASSY

(See page 60–15)

60. INSTALL HORN BUTTON ASSY

NOTICE:

- **Never use the airbag parts removed from another vehicle. When replacing parts, replace with new ones.**
- **Make sure that the horn button assy is installed with the specified torque.**
- **If the horn button assy has been dropped, or there are cracks, dents or other defects in the case or connector, replace the horn button assy with a new one.**
- **When installing the horn button assy, take care so that the wirings do not interfere with other parts and that they are not pinched between other parts.**

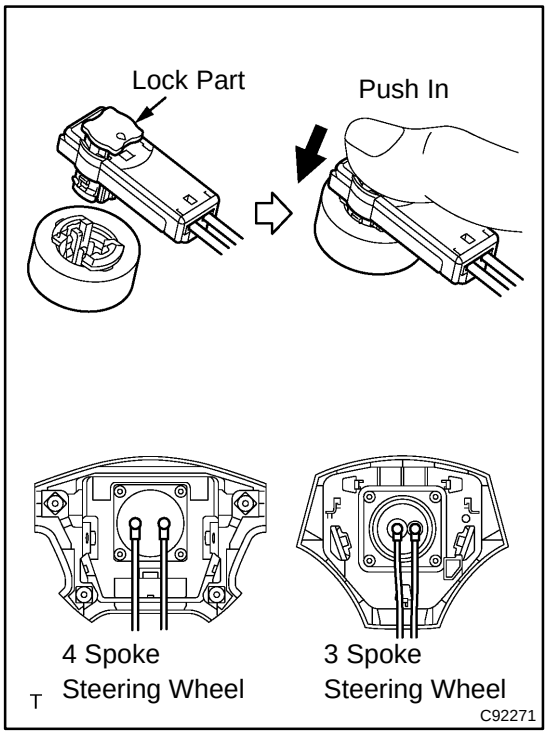

(a) Connect the 2 airbag connectors.
(b) Connect the horn connector. (4 Spoke steering wheel)

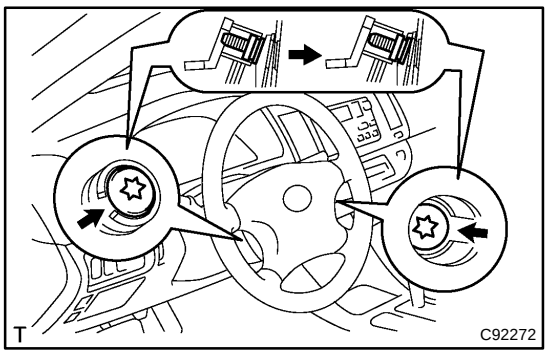

(c) Install the horn button assy after confirming that the circumference groove of the torx screws is caught on the screw case.
(d) Using a torx socket wrench, torque the 2 screws.
Torque: 8.8 N·m (90 kgf·cm, 78 in.·lbf)

61. INSTALL STEERING WHEEL COVER LOWER NO.2
(See page 50–6)

62. INSTALL STEERING WHEEL COVER LOWER NO.3(W/O STEERING PAD SWITCH 4 SPOKE STEERING WHEEL)
(See page 50–6)

63. INSTALL CONNECTOR COVER(W/ STEERING PAD SWITCH 4 SPOKE STEERING WHEEL) (See page 50–6)

64. INSTALL STEERING WHEEL COVER LOWER NO.3(3 SPOKE STEERING WHEEL ASSY) (See page 50–6)

65. INSPECT STEERING WHEEL CENTER POINT

66. INSPECT SRS WARNING LIGHT(See page 05–690)

POWER STEERING SYSTEM

PRECAUTION

5105K–01

1. HANDLING PRECAUTIONS ON STEERING SYSTEM

(a) Care must be taken to when replacing parts. Incorrect replacement could affect the performance of the steering system and result in a driving hazard.

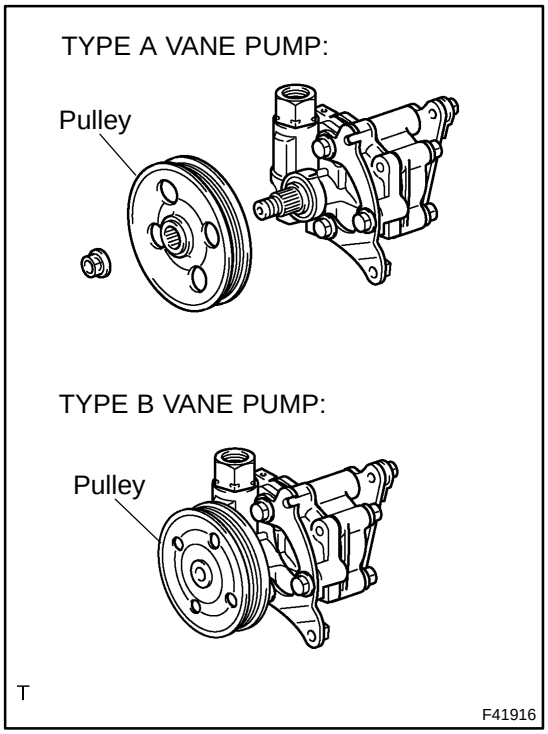

(b) 1MZ–FE engine has 2 types of vane pump assy.

HINT:

TYPE A VANE PUMP:

Vane pump pulley can be removed from the vane pump shaft (See page 51–15).

TYPE B VANE PUMP:

Vane pump pulley cannot be removed from the vane pump shaft (See page 51–15).

(c) ”Sport Grade” indicates the follwing models (See page 51–15).

MCV30L–AEPSKA

MCV30L–CEPSKA

2. HANDLING PRECAUTIONS ON SRS AIRBAG SYSTEM

(a) The CAMRY is equipped with SRS (Supplemental Restraint System) such as the driver airbag and front passenger airbag. Failure to carry out service operation in correct sequence could cause the SRS to unexpectedly deploy during servicing, possibly leading to a serious accident. Before servicing (including removal or installation of parts, inspection or replacement), be sure to read the precautionary notice for the supplemental restraint system (See page 60–1).

5105L–01

PROBLEM SYMPTOMS TABLE

HINT:

Use the table below to help you find the cause of the problem. The numbers indicate the priority of the likely cause of the problem. Check each part in the order shown. If necessary, repair or replace these parts.

Symptom	Suspect Area	See page
Hard steering	1. Tires (Improperly inflated)	28–1
	2. Power steering fluid level (Low)	51–3
	3. Drive belt (Loose)	14–5
		14–140
	4. Front wheel alignment (Incorrect)	26–5
	5. Steering system joints (Worn)	–
	6. Suspension arm ball joints (Worn)	26–17
	7. Steering column (Binding)	–
	8. Power steering vane pump	51–8
		51–17
	9. Power steering gear	51–29
Poor return	1. Tires (Improperly inflated)	28–1
	2. Front wheel alignment (Incorrect)	26–5
	3. Steering column (Binding)	–
	4. Power steering gear	51–29
Excessive play	1. Steering system joints (Worn)	–
	2. Suspension arm ball joints (Worn)	26–17
	3. Intermediate shaft, Sliding yoke (Worn)	–
	4. Front wheel bearing (Worn)	26–5
	5. Power steering gear	51–29
Abnormal noise	1. Power steering fluid level (Low)	51–3
	2. Steering system joints (Worn)	–
	3. Power steering vane pump	51–8
		51–17
	4. Power steering gear	51–29

5105M–01

ON–VEHICLE INSPECTION

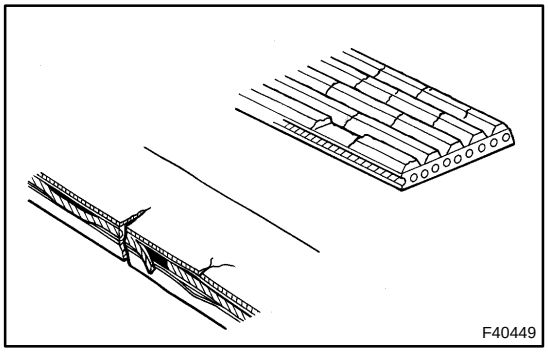

1. INSPECT DRIVE BELT

(a) Visually check the belt for excessive wear, frayed cords, etc.

If any defect is found, replace the drive belt.

HINT:

Cracks on the rib side of a belt are considered acceptable. If the missing chunks from the ribs are found on the belt, it should be replaced.

2. BLEED POWER STEERING SYSTEM

(a) Check the fluid level.

(b) Jack up the front of the vehicle and support it with the stands.

(c) Turn the steering wheel.

(1) With the engine stopped, turn the wheel slowly from lock to lock several times.

(d) Lower the vehicle.

(e) Start the engine.

(1) Run the engine at idle for a few minutes.

(f) Turn the steering wheel.

(1) With the engine idling, turn the wheel to left or right full lock position and keep it there for 2 – 3 seconds, then turn the wheel to the opposite full lock position and keep it there for 2 – 3 seconds.

(2) Repeat (1) several times.

(g) Stop the engine.

(h) Check for forming or emulsification.

Especially, if the system has to be bled twice because of foaming or emulsification, check for fluid leaks in the system.

(i) Check the fluid level.

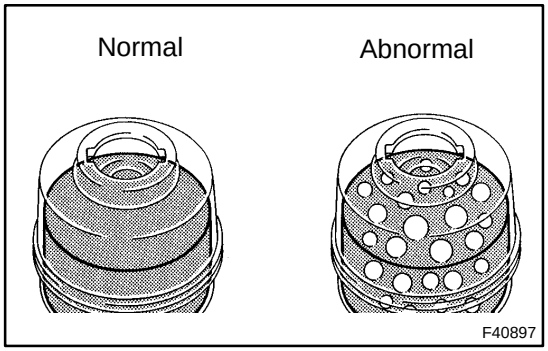

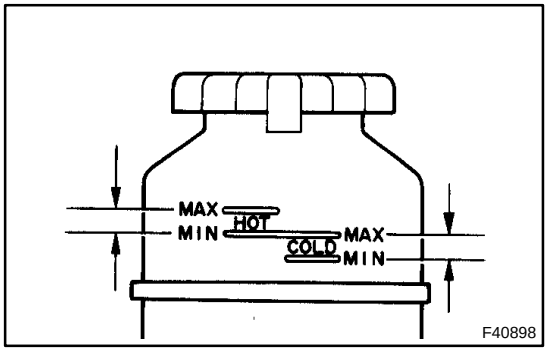

3. CHECK FLUID LEVEL

(a) Keep the vehicle level.

(b) With the engine stopped, check the fluid level in the oil reservoir.

If necessary, add fluid.

Fluid: ATF DEXRON® II or III

HINT:

Check that the fluid level is within the HOT LEVEL range on the reservoir cap. If the fluid is cold, check that it is within the COLD LEVEL range.

(c) Start the engine and run it at idle.
(d) Turn the steering wheel from lock to lock several times to raise fluid temperature.
Fluid temperature: 75 – 80˚C (167 – 176˚F)

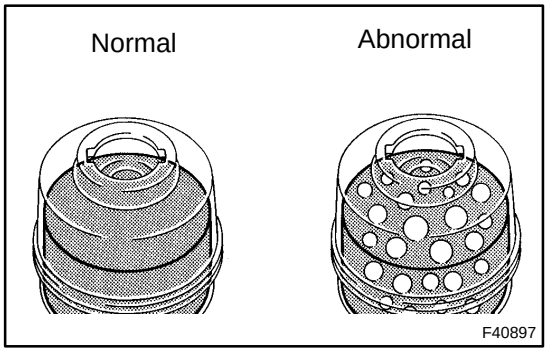

(e) Check for foaming or emulsification.
If foaming or emulsification is identified, bleed the power steering system.

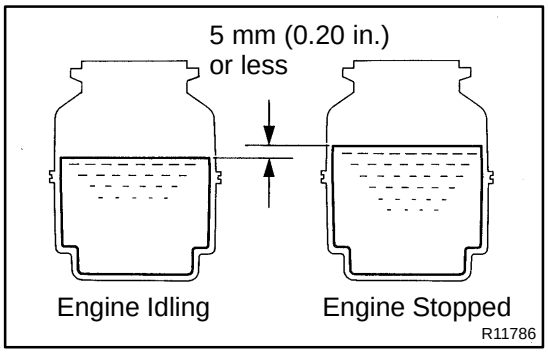

(f) With the engine idling, measure the fluid level in the oil reservoir.
(g) Stop the engine.
(h) Wait a few minutes and remeasure the fluid level in the oil reservoir.
Maximum fluid level rise: 5 mm (0.20 in.)
If a problem is found, bleed the power steering system.
(i) Check the fluid level.

4. CHECK STEERING FLUID PRESSURE

(a) Disconnect the pressure feed tube from the rack & pinion power steering gear assy (See page 51–29).
(b) Connect SST, as shown in the illustration.
SST 09640–10010 (09641–01010, 09641–01020, 09641–01030)

NOTICE:
Check that the valve of the SST is in the open position.

(c) Bleed the power steering system.
(d) Start the engine and run it at idle.
(e) Turn the steering wheel from lock to lock several times to raise fluid temperature.
Fluid temperature: 75 – 80 ˚C (167 – 176 ˚F)

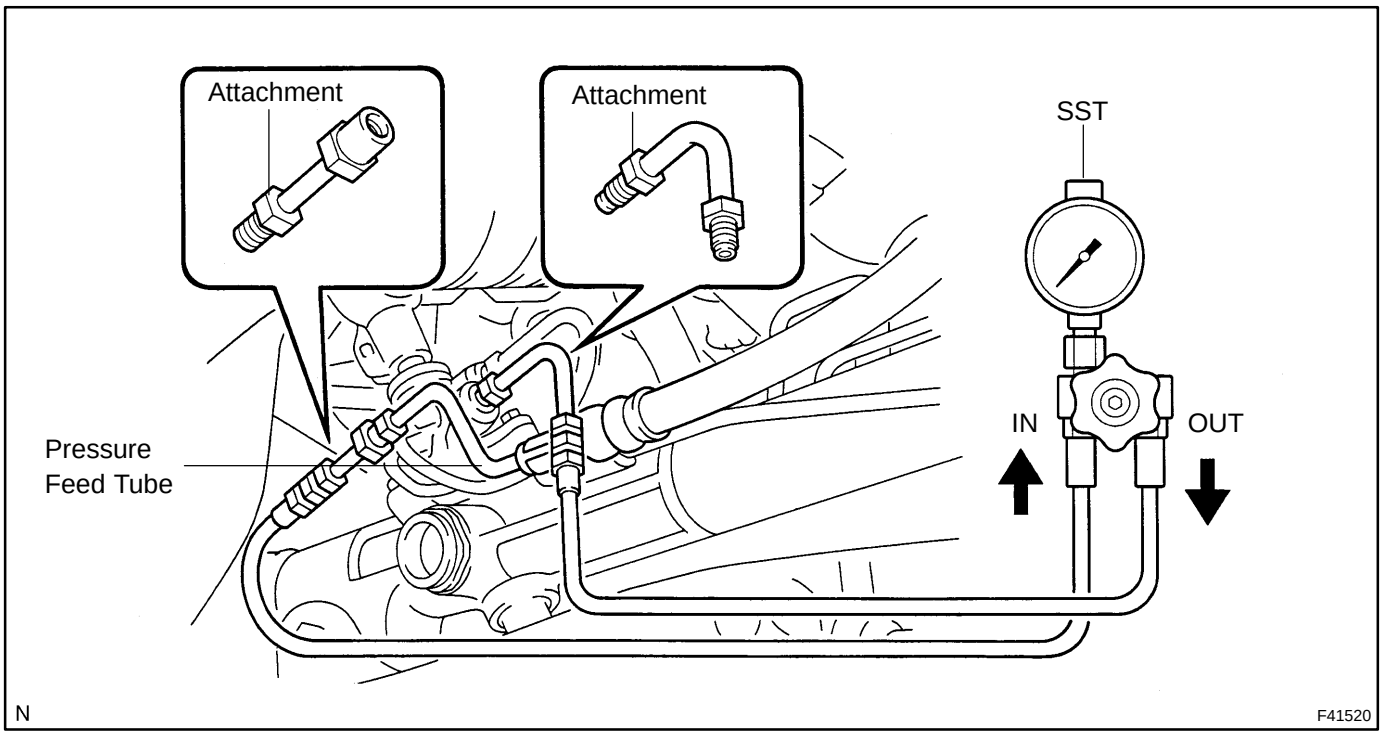

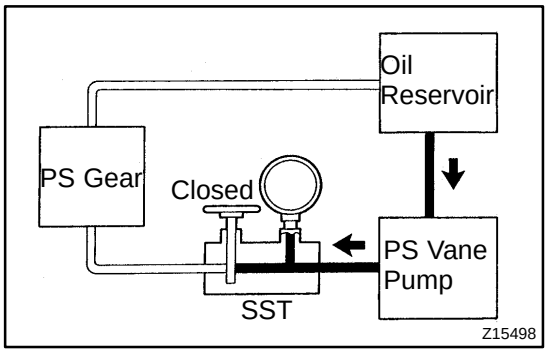

(f) With the engine idling, close the valve of the SST and observe the reading on the SST.

Fluid pressure:

7,800 – 8,300 kPa (80 – 85 kgf/cm^2, 1,138 – 1,209 psi)

NOTICE:

- **Do not keep the valve closed for more than 10 seconds.**
- **Do not let the fluid temperature become too high.**

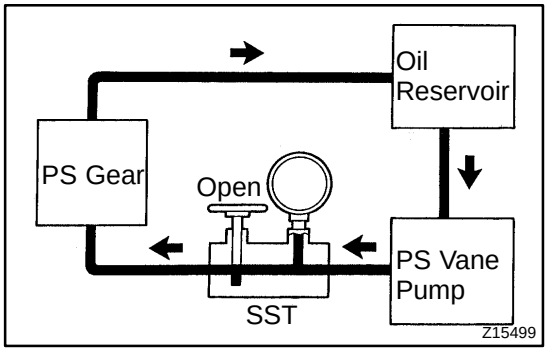

(g) With the engine idling, open the valve fully.

(h) Measure the fluid pressure at engine speeds of 1,000 rpm and 3,000 rpm.

Fluid pressure difference:

490 kPa (5 kgf/cm^2, 71 psi) or less

NOTICE:

Do not turn the steering wheel.

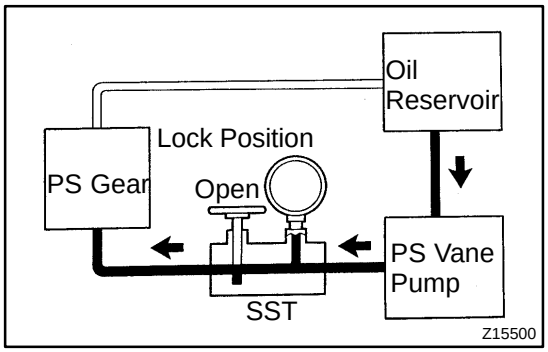

(i) With the engine idling and valve fully opened, turn the steering wheel to full lock position.

Fluid pressure:

7,800 – 8,300 kPa (80 – 85 kgf/cm^2, 1,138 – 1,209 psi)

NOTICE:

- **Do not maintain lock position for more than 10 seconds.**
- **Do not let the fluid temperature become too high.**

(j) Disconnect the SST.
SST 09640–10010 (09641–01010, 09641–01020, 09641–01030)
(k) Connect the pressure feed tube to the rack & pinion power steering gear assy (See page 51–29).
(l) Bleed the power steering system.

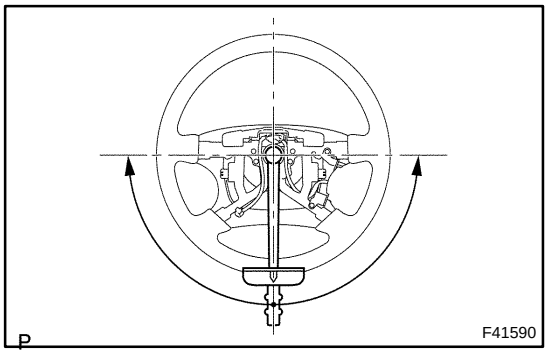

5. CHECK STEERING EFFORT

(a) Center the steering wheel assy.
(b) Remove the horn button assy
(See page 50–9, 50–22).
(c) Start the engine and run it at idle.
(d) Using a torque wrench, measure the steering effort in both directions.
Steering effort (Reference):
6 N·m (60 kgf·cm, 53 in.·lbf) or less

HINT:
Take the tire type, pressure and contact surface into consideration before making your diagnosis.

(e) Install the steering wheel assy set nut.
Torque: 50 N·m (510 kgf·cm, 37 ft·lbf)
(f) Install the horn button assy
(See page 50–9, 50–22).

VANE PUMP ASSY (2AZ–FE)

5105N–01

COMPONENTS

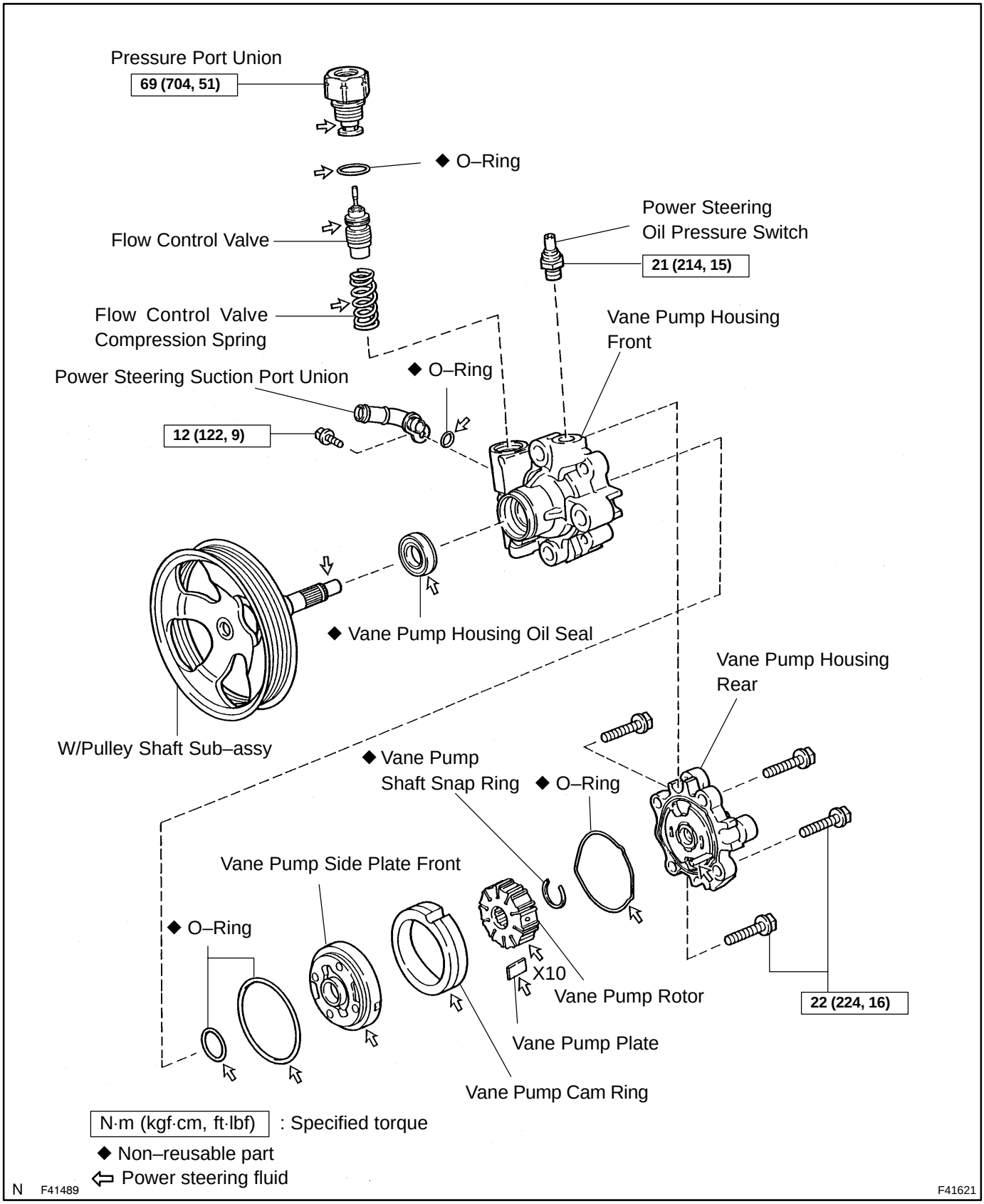

5105O–01

OVERHAUL

NOTICE:

- **When using a vise, do not over tighten.**
- **When installing, coat the parts indicated by the arrows with power steering fluid (See page 51–7).**

1. REMOVE FRONT WHEEL RH

2. DRAIN POWER STEERING FLUID

3. REMOVE FRONT FENDER LINER RH

4. REMOVE FRONT FENDER APRON SEAL RH

5. REMOVE FAN AND GENERATOR V BELT
(See page 14–5)
SST 09249–63010

6. DISCONNECT OIL RESERVOIR TO PUMP HOSE NO.1

(a) Remove the clip and disconnect the oil reservoir to pump hose No.1.

NOTICE:
Take care not to spill fluid on the V belt.

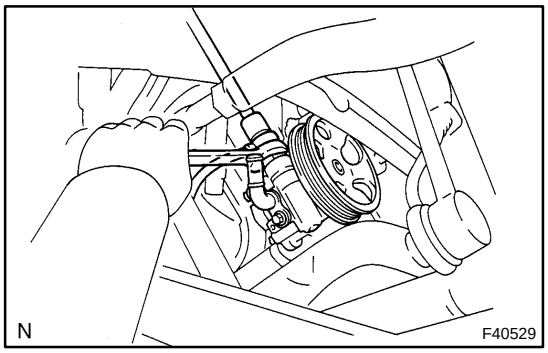

7. DISCONNECT PRESSURE FEED TUBE ASSY

(a) Disconnect the connector from the power steering oil pressure switch.
(b) Using a spanner (27 mm) to hold the pressure port union, remove the union bolt and gasket.

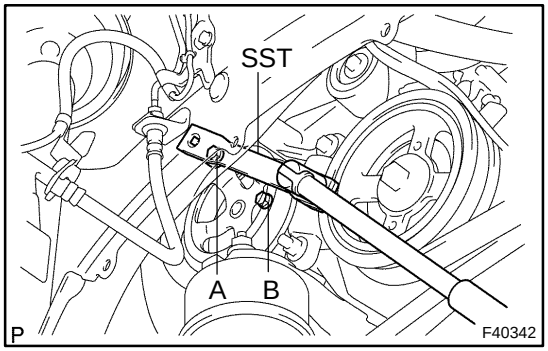

8. REMOVE VANE PUMP ASSY

(a) Disconnect the connector from the oil pressure switch.
(b) Using SST and a deep socket (14 mm), loosen the bolt A.
SST 09249–63010
(c) Remove the bolt B and vane pump assy.

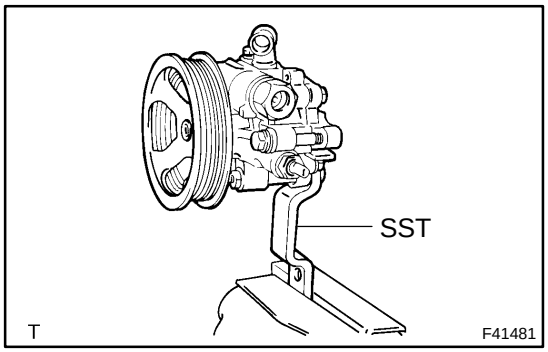

9. FIX VANE PUMP ASSY

(a) Using SST, hold the vane pump assy on the vise through the aluminum plate.
SST 09630–00014 (09631–00132)

HINT:
As follow the necessity, remove and install SST for holding.

10. REMOVE POWER STEERING SUCTION PORT UNION

(a) Remove the bolt and power steering suction port union.
(b) Remove the O–ring from the power steering suction port union.

11. REMOVE PRESSURE PORT UNION

(a) Using a socket wrench (27 mm), remove the pressure port union.
(b) Remove the O–ring from the pressure port union.

12. REMOVE FLOW CONTROL VALVE

13. REMOVE FLOW CONTROL VALVE COMPRESSION SPRING

14. REMOVE POWER STEERING OIL PRESSURE SWITCH

NOTICE:

Be careful not to drop the power steering oil pressure switch.

If the power steering oil pressure switch is dropped or strongly damaged, replace it with a new one.

15. REMOVE VANE PUMP HOUSING REAR

(a) Remove the 4 bolts and vane pump housing rear from the vane pump housing front.
(b) Remove the O–ring from the vane pump housing rear.

16. REMOVE W/PULLEY SHAFT SUB–ASSY

(a) Using a screwdriver, remove the vane pump shaft snap ring from the w/pulley shaft sub–assy.
(b) Remove the w/pulley shaft sub–assy.

17. REMOVE VANE PUMP ROTOR

(a) Remove the 10 vane pump plates.
(b) Remove the vane pump rotor.

18. REMOVE VANE PUMP CAM RING

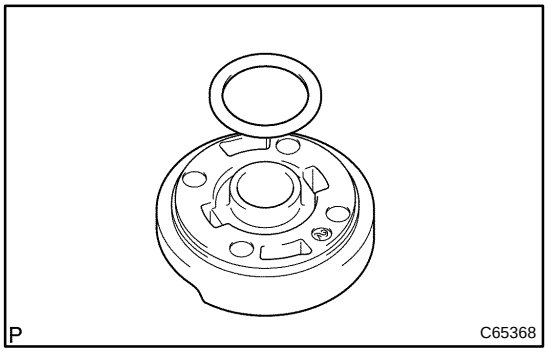

19. REMOVE VANE PUMP SIDE PLATE FRONT

(a) Remove the vane pump side plate front from the vane pump housing front.
(b) Remove the O–ring from the vane pump side plate front.

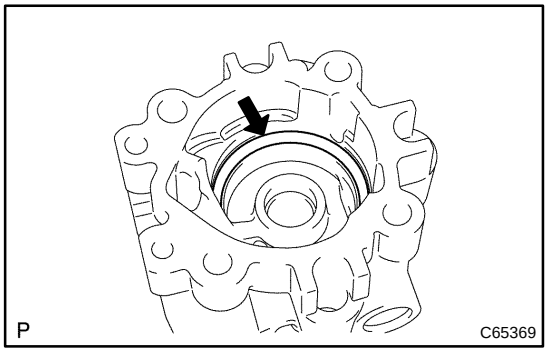

(c) Remove the O–ring from the vane pump housing front.

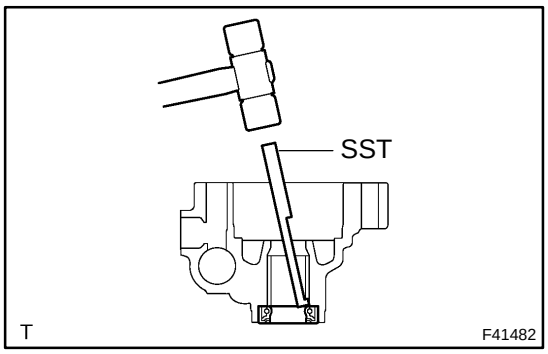

20. REMOVE VANE PUMP HOUSING OIL SEAL

(a) Using SST and a hammer, tap out the vane pump housing oil seal from the vane pump housing front.
SST 09631–10030

NOTICE:

Be careful not to damage the bushing of the vane pump housing front.

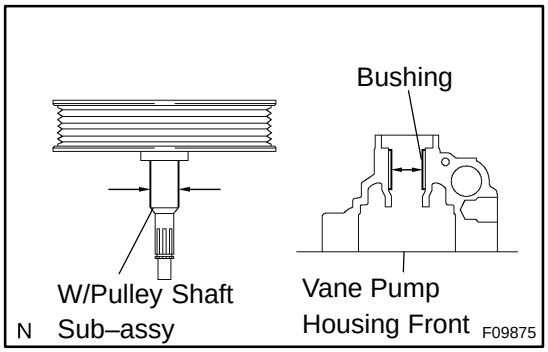

21. INSPECT OIL CLEARANCE

(a) Using a micrometer and a caliper gauge, measure the oil seal clearance.
Standard clearance:
0.009 – 0.031 mm (0.00035 – 0.00122 in.)
Maximum clearance: 0.07 mm (0.0028 in.)

If it is more than the maximum, replace the vane pump assy.

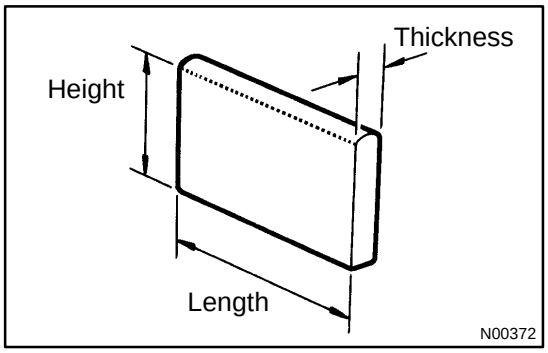

22. INSPECT VANE PUMP ROTOR AND VANE PUMP PLATES

(a) Using a micrometer, measure the height, thickness and length of the vane pump plates.
Minimum height: 7.7 mm (0.303 in.)
Minimum thickness: 1.408 mm (0.05543 in.)
Minimum length: 11.993 mm (0.47216 in.)

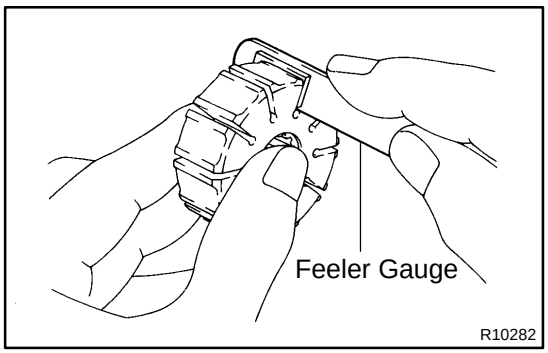

(b) Using a feeler gauge, measure the clearance between a side face of the vane pump rotor groove and vane pump plate.
Maximum clearance: 0.03 mm (0.0012 in.)

If it is more than the maximum, replace the vane pump assy.

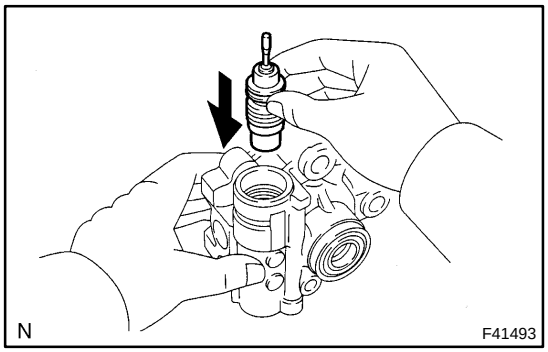

23. INSPECT FLOW CONTROL VALVE

(a) Coat the flow control valve with power steering fluid and check that it falls smoothly into the flow control valve hole by its own weight.

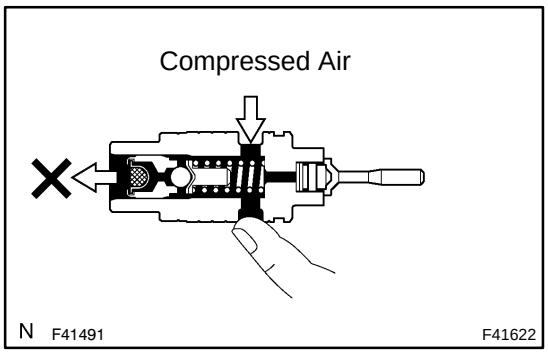

(b) Check the flow control valve for leakage. Close one of the holes and apply compressed air of 392 – 490 kPa (4 – 5 kgf/cm^2, 57 – 71 psi) into the opposite side hole, and confirm that air does not come out from the end holes.

If necessary, replace the vane pump assy.

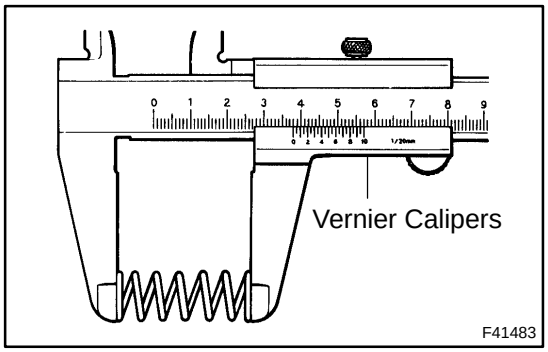

24. INSPECT FLOW CONTROL VALVE COMPRESSION SPRING

(a) Using vernier calipers, measure the free length of the flow control valve compression spring.

Minimum free length: 35.8 mm (1.409 in.)

If it is not within the specification, replace the vane pump assy.

25. INSPECT PRESSURE PORT UNION

If the union seat in the pressure port union is remarkably damaged and it may cause fluid leakage, replace the vane pump assy.

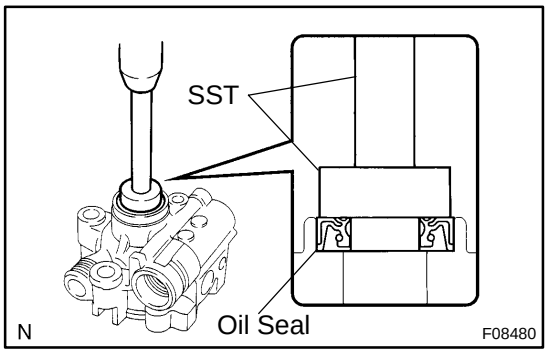

26. INSTALL VANE PUMP HOUSING OIL SEAL

(a) Coat a new oil seal lip with power steering fluid.

(b) Using SST and a press, install the new vane pump housing oil seal.

SST 09950–60010 (09951–00280), 09950–70010 (09951–07100)

NOTICE:

Make sure that the vane pump housing oil seal is installed facing the correct direction.

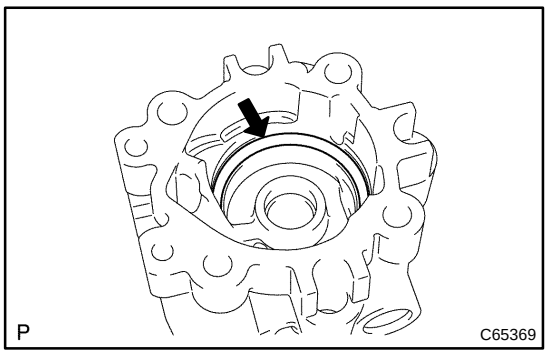

27. INSTALL VANE PUMP SIDE PLATE FRONT

(a) Coat a new O–ring with power steering fluid and install it to the vane pump housing front.

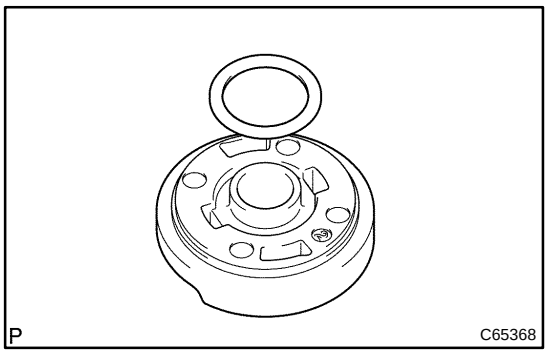

(b) Coat a new O–ring with power steering fluid and install it to the vane pump side plate front.

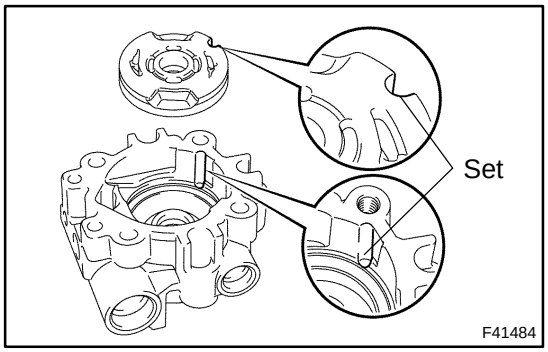

(c) Align the dent of the vane pump side plate front with that of the vane pump housing front, and install the vane pump side plate front.

NOTICE:

Make sure that the vane pump side plate front is installed facing in the correct direction.

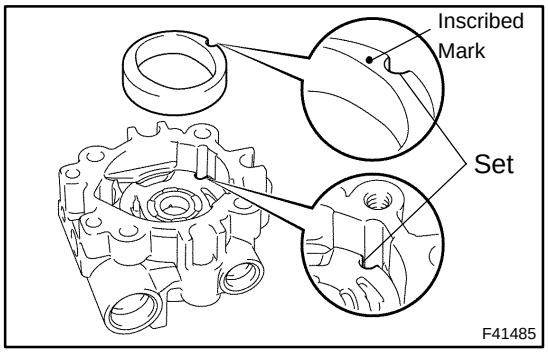

28. INSTALL VANE PUMP CAM RING

(a) Align the dent of the vane pump cam ring with that of the vane pump side plate front, and install the vane pump cam ring with the inscribed mark facing outward.

29. INSTALL W/PULLEY SHAFT SUB–ASSY

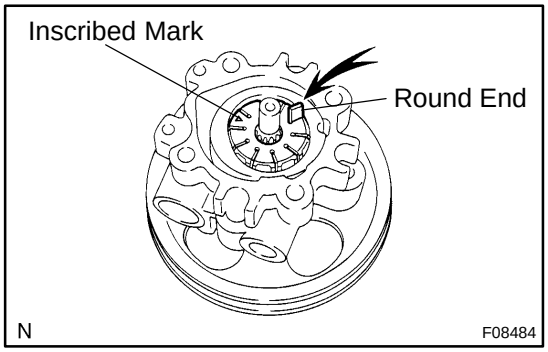

30. INSTALL VANE PUMP ROTOR

(a) Install the vane pump rotor with the inscribed mark facing outward.

(b) Coat 10 vane pump plates with power steering fluid.

(c) Install the vane pump plates with the round end facing outward.

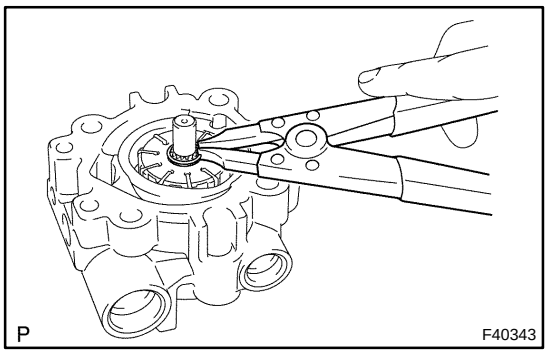

(d) Using a snap ring expander, install a new vane pump shaft snap ring to the w/pulley shaft sub–assy.

31. INSTALL VANE PUMP HOUSING REAR

(a) Coat a new O–ring with power steering fluid and install it to the vane pump housing rear.

(b) Align the straight pin of the vane pump housing rear with the dents of the vane pump cam ring, vane pump side plate front and vane pump housing front, and install the vane pump housing rear with the 4 bolts.

Torque: 22 N·m (224 kgf·cm, 16 ft·lbf)

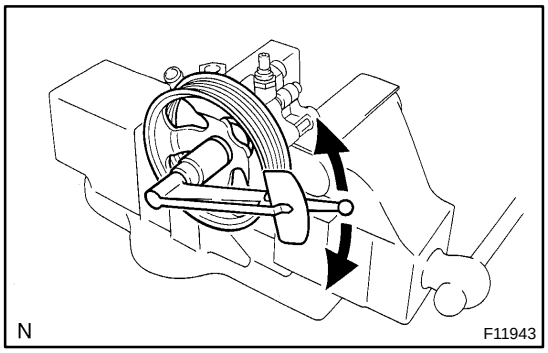

32. MEASURE VANE PUMP ROTATION TORQUE

(a) Check that the vane pump rotates smoothly without abnormal noise.

(b) Temporarily install the service bolt.

Recommended service bolt:
Thread diameter: 10 mm (0.39 in.)
Thread pitch: 1.25 mm (0.0492 in.)
Bolt length: 50 mm (1.97 in.)

(c) Using a torque wrench, check the vane pump rotating torque.

Rotating torque:
0.27 N·m (2.8 kgf·cm, 2.4 in.·lbf) or less

33. INSTALL POWER STEERING OIL PRESSURE SWITCH

(a) Coat a new O–ring with power steering fluid and install it to the power steering oil pressure switch.

(b) Install the power steering oil pressure switch to the vane pump assy.

Torque: 21 N·m (214 kgf·cm, 15 ft·lbf)

34. INSTALL FLOW CONTROL VALVE COMPRESSION SPRING

(a) Coat the flow control valve compression spring with power steering fluid and install it.

35. INSTALL FLOW CONTROL VALVE

(a) Coat the flow control valve with power steering fluid and install it.

36. INSTALL PRESSURE PORT UNION

(a) Coat a new O–ring with power steering fluid and install it to the pressure port union.

(b) Using a socket wrench (27 mm), install the pressure port union.

Torque: 69 N·m (704 kgf·cm, 51 ft·lbf)

37. INSTALL POWER STEERING SUCTION PORT UNION

(a) Coat a new O–ring with power steering fluid and install it to the power steering suction port union.

(b) Install the power steering suction port union with the bolt.

Torque: 12 N·m (122 kgf·cm, 9 ft·lbf)

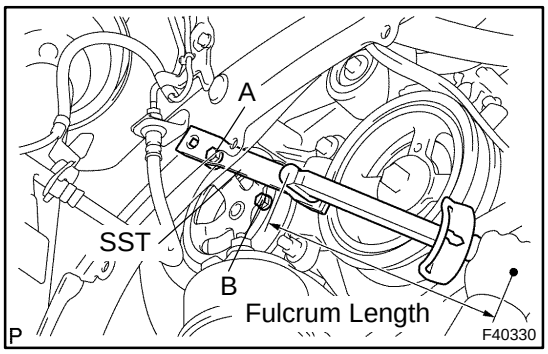

38. INSTALL VANE PUMP ASSY

(a) Temporarily tighten the bolt A to the vane pump assy.
(b) Install the vane pump assy and bolt B.
Torque: 43 N·m (438 kgf·cm, 32 ft·lbf)
(c) Using SST and a deep socket (14 mm), tighten the bolt A.
SST 09249–63010
Torque: 30 N·m (306 kgf·cm, 22 ft·lbf)

HINT:
- Use a torque wrench with a fulcrum length of 345 mm (13.58 in.).
- This torque value is effective in case that SST is parallel to a torque wrench.

(d) Connect the connector to the power steering oil pressure switch.

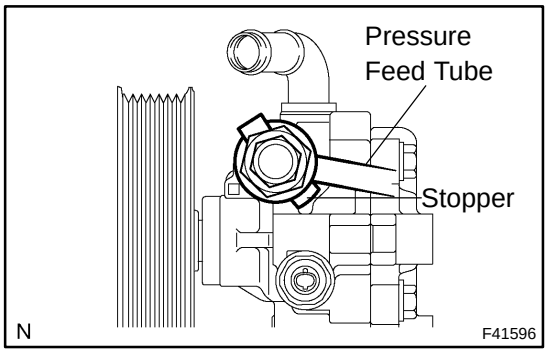

39. CONNECT PRESSURE FEED TUBE ASSY

(a) Install the pressure feed tube assy and gasket to the vane pump assy with the union bolt.

HINT:
Make sure the stopper of the pressure feed tube touches the pump housing front as shown in the illustration.

(b) Using a spanner (27 mm) to hold the pressure port union, torque the union bolt.
Torque: 51.5 N·m (525 kgf·cm, 38 ft·lbf)

40. CONNECT OIL RESERVOIR TO PUMP HOSE NO.1

(a) Connect the oil reservoir to pump hose No.1.
(b) Install the clip.

41. INSTALL FAN AND GENERATOR V BELT
(See page 14–5)
SST 09249–63010

42. INSTALL FRONT FENDER APRON SEAL RH

43. INSTALL FRONT FENDER LINER RH

44. INSTALL FRONT WHEEL RH
Torque: 103 N·m (1,050 kgf·cm, 76 ft·lbf)

45. BLEED POWER STEERING FLUID

46. INSPECT FLUID LEAK

VANE PUMP ASSY (1MZ–FE)

COMPONENTS

5105P–01

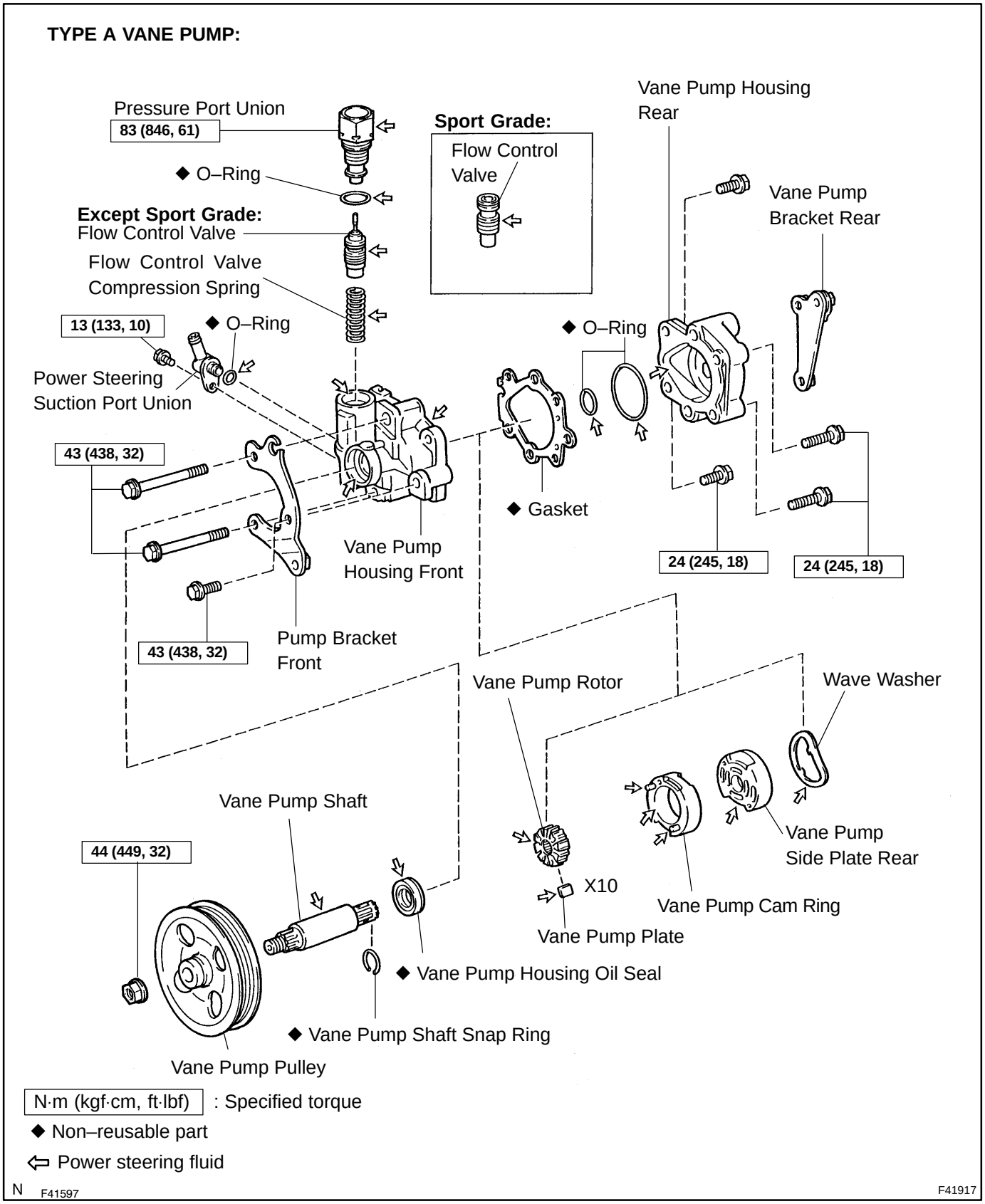

TYPE B VANE PUMP:

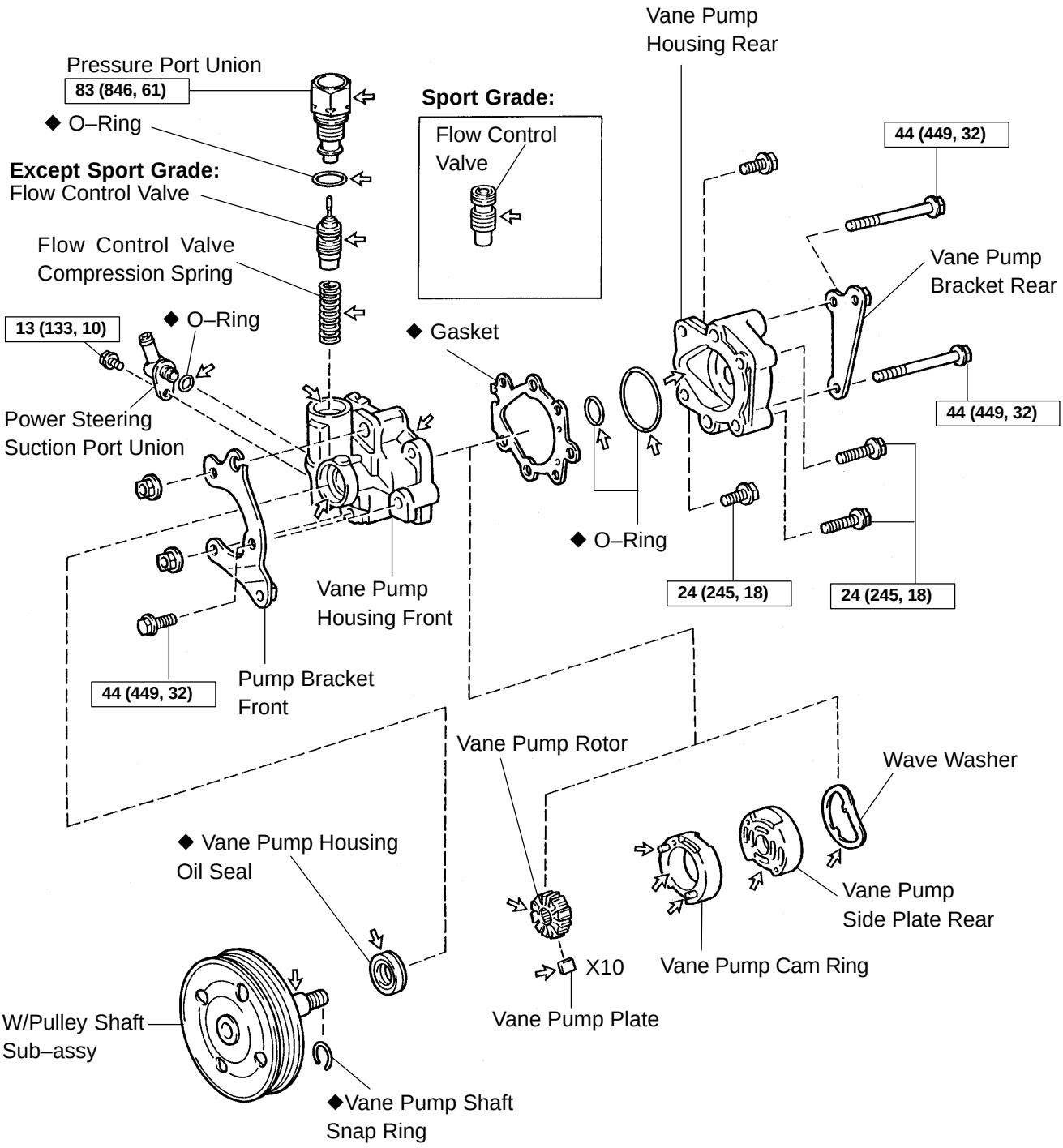

5105Q–01

OVERHAUL

NOTICE:

- **When using a vise, do not over tighten.**
- **When installing, coat the parts indicated by the arrows with power steering fluid (See page 51–15).**

1. REMOVE FRONT WHEEL RH

2. DRAIN POWER STEERING FLUID

3. REMOVE FRONT FENDER LINER RH

4. REMOVE FRONT FENDER APRON SEAL RH

5. DISCONNECT OIL RESERVOIR TO PUMP HOSE NO.1

(a) Remove the clip and disconnect the oil reservoir to pump hose No.1.

NOTICE:

Take care not to spill fluid on the V belt.

6. REMOVE POWER STEERING OIL PRESSURE SWITCH

(a) Disconnect the connector.

(b) Remove the power steering oil pressure switch from the union bolt.

NOTICE:

Be careful not to drop the power steering oil pressure switch.

If the power steering oil pressure switch is dropped or strongly damaged, replace it with a new one.

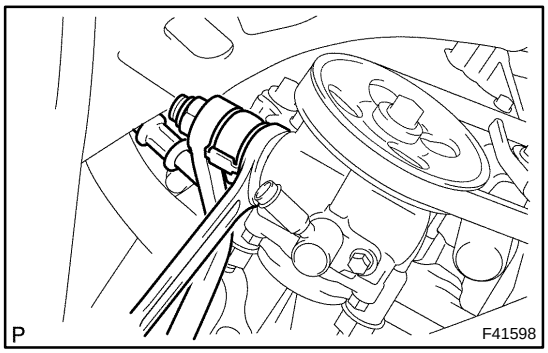

7. DISCONNECT PRESSURE FEED HOSE

(a) Using a spanner (24 mm) to hold the pressure port union, remove the union bolt and gasket.

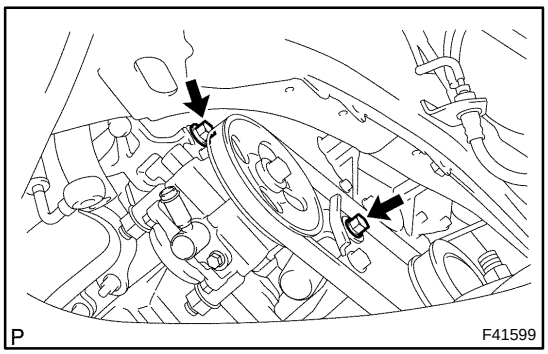

8. REMOVE VANE PUMP V BELT

(a) Loosen the 2 bolts and remove the vane pump V belt.

9. REMOVE VANE PUMP ASSY

(a) Remove the 2 bolts and vane pump assy.

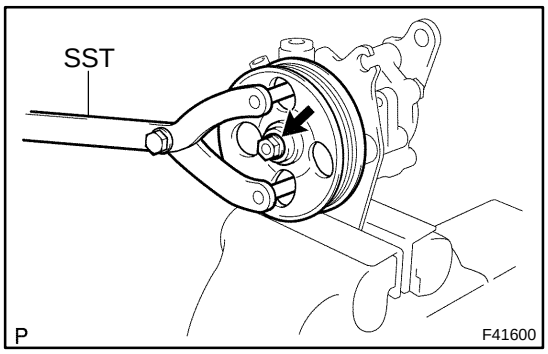

10. REMOVE VANE PUMP PULLEY(TYPE A VANE PUMP)

(a) Using SST, stop the vane pump pulley rotation and loosen the nut.
SST 09960–10010 (09962–01000, 09963–01000)
(b) Remove the nut and vane pump pulley from the vane pump shaft.

11. REMOVE POWER STEERING SUCTION PORT UNION

(a) Remove the bolt and power steering suction port union.
(b) Remove the O–ring from the power steering suction port union.

12. REMOVE PRESSURE PORT UNION

(a) Remove the pressure port union.
(b) Remove the O–ring from the pressure port union.

13. REMOVE FLOW CONTROL VALVE

14. REMOVE FLOW CONTROL VALVE COMPRESSION SPRING

15. REMOVE VANE PUMP BRACKET REAR(TYPE A VANE PUMP)

(a) Remove the 2 bolts, vane pump bracket rear from the vane pump assy.

16. REMOVE VANE PUMP BRACKET REAR(TYPE B VANE PUMP)

(a) Remove the 2 bolts and 2 nuts, vane pump bracket rear from the vane pump assy.

17. REMOVE VANE PUMP HOUSING REAR

(a) Remove the 4 bolts and vane pump housing rear from the vane pump housing front.
(b) Remove the gasket.
(c) Remove the 2 O–rings from the vane pump housing rear.

18. REMOVE VANE PUMP SIDE PLATE REAR

(a) Remove the wave washer from the vane pump side plate rear.
(b) Remove the vane pump side plate rear.

19. REMOVE VANE PUMP CAM RING

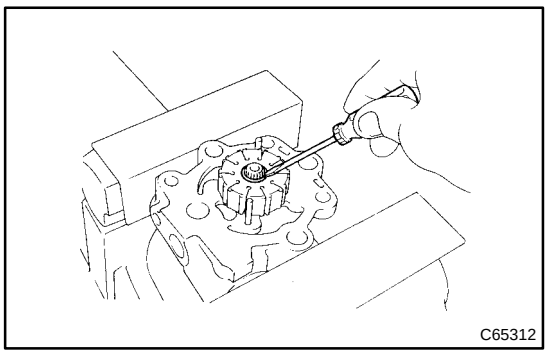

20. REMOVE VANE PUMP ROTOR

(a) Remove the 10 vane pump plates from the vane pump rotor.
(b) Using a screwdriver, remove the vane pump shaft snap ring from the vane pump shaft.
(c) Remove the vane pump rotor.

21. REMOVE VANE PUMP SHAFT(TYPE A VANE PUMP)

22. REMOVE W/PULLEY SHAFT SUB–ASSY(TYPE B VANE PUMP)

23. REMOVE PUMP BRACKET FRONT

(a) Remove the bolt, pump bracket front from the vane pump housing front.

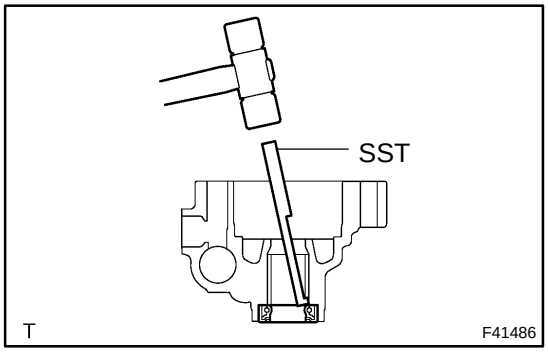

24. REMOVE VANE PUMP HOUSING OIL SEAL

(a) Using SST and a hammer, tap out the vane pump housing oil seal from the vane pump housing front.
SST 09631–10030

NOTICE:

Be careful not to damage the bushing of the vane pump housing front.

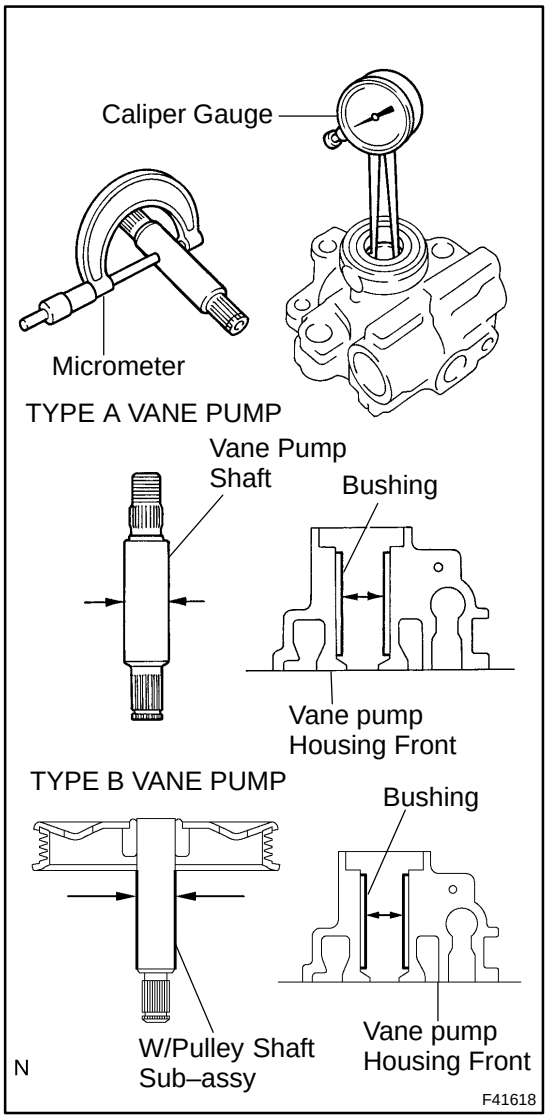

25. INSPECT OIL CLEARANCE

(a) Using a micrometer and a caliper gauge, measure the oil clearance.

Standard clearance:
0.027 – 0.054 mm (0.00106 – 0.00213 in.)
Maximum clearance: 0.07 mm (0.0028 in.)

If it is more than the maximum, replace the vane pump assy.

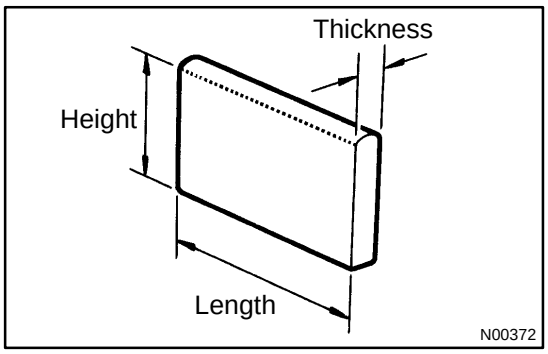

26. INSPECT VANE PUMP ROTOR AND VANE PUMP PLATES

(a) Using a micrometer, measure the height, thickness and length of the vane pump plates.
Minimum height: 8.7 mm (0.343 in.)
Minimum thickness: 1.4 mm (0.055 in.)
Minimum length: 14.991 mm (0.59020 in.)

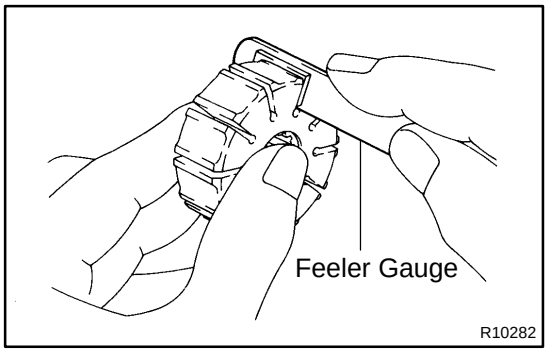

(b) Using a feeler gauge, measure the clearance between the vane pump rotor groove and vane pump plate.
Maximum clearance: 0.03 mm (0.0012 in.)

If it is more than the maximum, replace the vane pump assy.

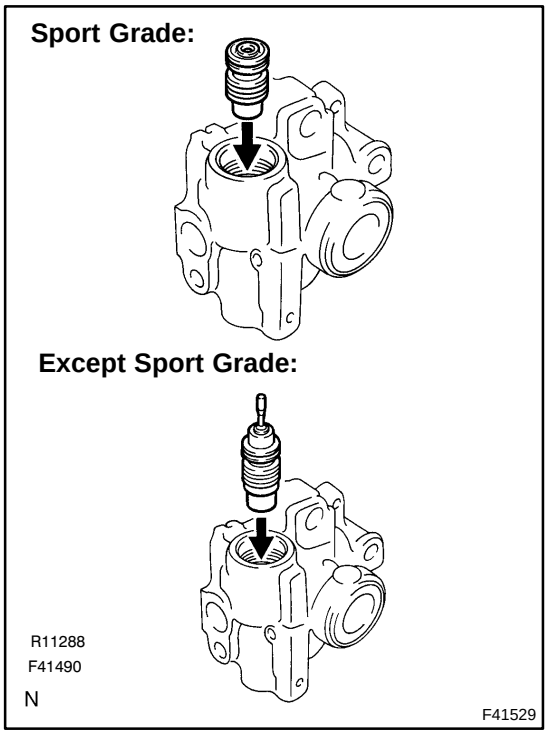

27. INSPECT FLOW CONTROL VALVE

(a) Coat the flow control valve with power steering fluid and check that it falls smoothly into the flow control valve hole by its own weight.

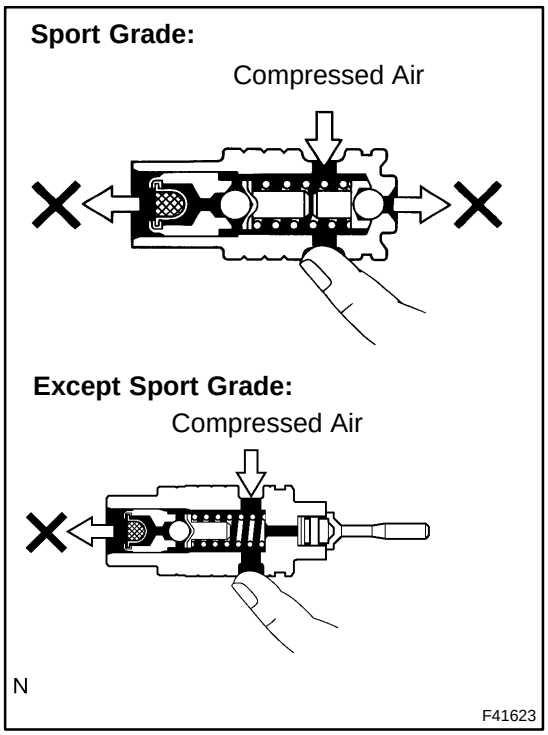

(b) Check the flow control valve for leakage. Close one of the holes and apply compressed air of 392 – 490 kPa (4 – 5 kgf/cm^2, 57 – 71 psi) into the opposite side hole, and confirm that air does not come out from the end holes.

If necessary, replace the vane pump assy.

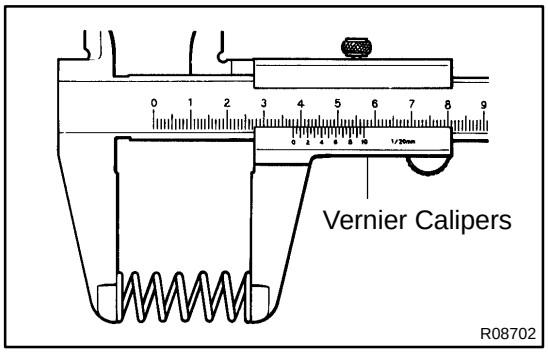

28. INSPECT FLOW CONTROL VALVE COMPRESSION SPRING

(a) Using vernier calipers, measure the free length of the flow control valve compression spring.

Minimum free length: 32.24 mm (1.2693 in.)

If it is not within the specification, replace the vane pump assy.

29. INSPECT PRESSURE PORT UNION

If the union seat in the pressure port union is remarkably damaged and it may cause fluid leakage, replace the vane pump assy.

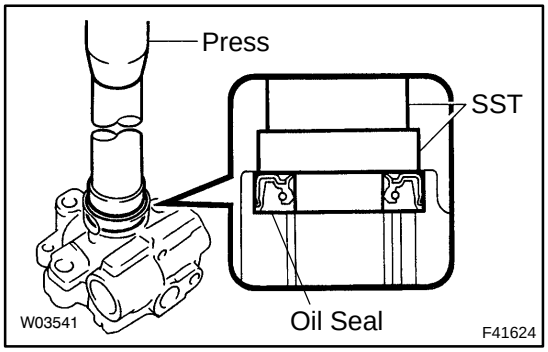

30. INSTALL VANE PUMP HOUSING OIL SEAL

(a) Coat a new vane pump housing oil seal lip with power steering fluid.

(b) Using SST and a press, install the new vane pump housing oil seal.

SST 09950–60010 (09951–00330),
09950–70010 (09951–07100)

NOTICE:

Make sure that the vane pump housing oil seal is installed facing the correct direction.

31. INSTALL PUMP BRACKET FRONT

(a) Install the pump bracket front with the bolt.
Torque:
Type A Vane Pump: 43 N·m (438 kgf·cm, 32 ft·lbf)
Type B Vane Pump: 44 N·m (449 kgf·cm, 32 ft·lbf)

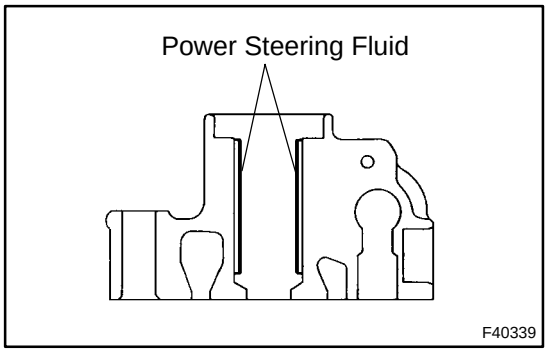

32. INSTALL VANE PUMP SHAFT(TYPE A VANE PUMP)

(a) Coat inside bushing surface of the vane pump housing front with power steering fluid.
(b) Gradually insert the vane pump shaft from the pulley side.

NOTICE:
Do not damage the vane pump housing oil seal lip in the vane pump housing front.

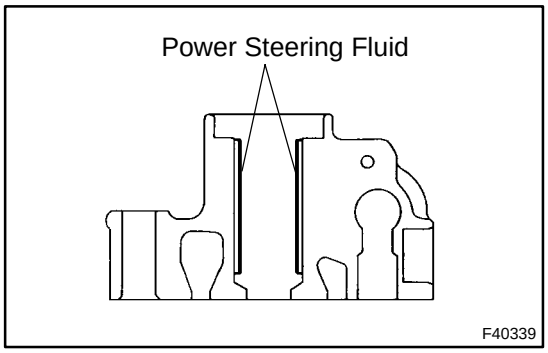

33. INSTALL W/PULLEY SHAFT SUB–ASSY(TYPE B VANE PUMP)

(a) Coat inside bushing surface of the vane pump housing front with power steering fluid.
(b) Gradually insert the w/pulley shaft sub–assy from the pulley side.

NOTICE:
Do not damage the vane pump housing oil seal lip in the vane pump housing front.

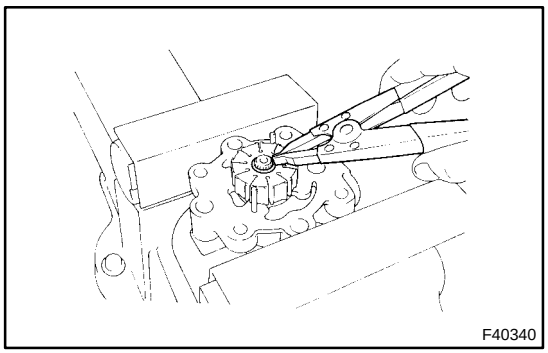

34. INSTALL VANE PUMP ROTOR

(a) Install the vane pump rotor.
(b) Using a shaft snap ring expander, install a new vane pump shaft snap ring to the vane pump shaft.

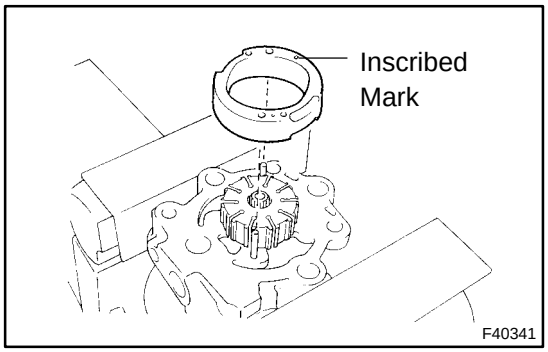

35. INSTALL VANE PUMP CAM RING

(a) Align the holes of the vane pump cam ring with 2 straight pins, and install the vane pump cam ring with inscribed mark facing outward.

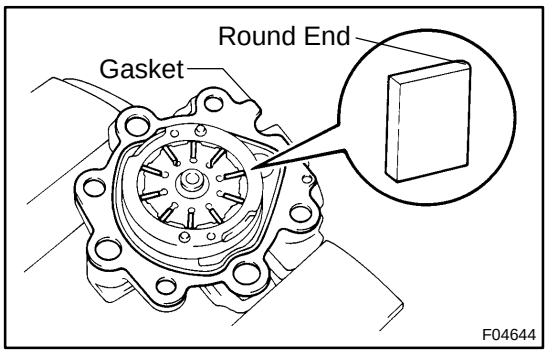

(b) Coat 10 vane pump plates with power steering fluid.
(c) Install the vane pump plates with the round end facing outward.
(d) Install a new gasket.

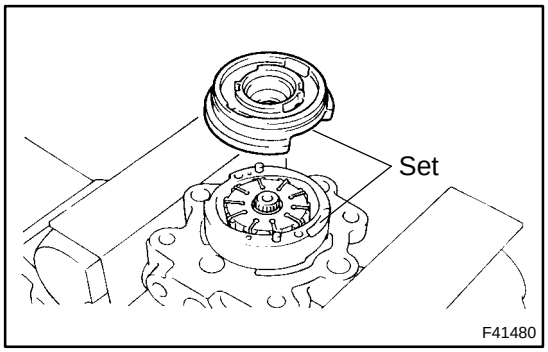

36. INSTALL VANE PUMP SIDE PLATE REAR

(a) Coat a new O–ring with power steering fluid and install it to the vane pump side plate rear.
(b) Align the groove of the vane pump cam ring with that of the vane pump side plate rear, install the vane pump side plate rear.

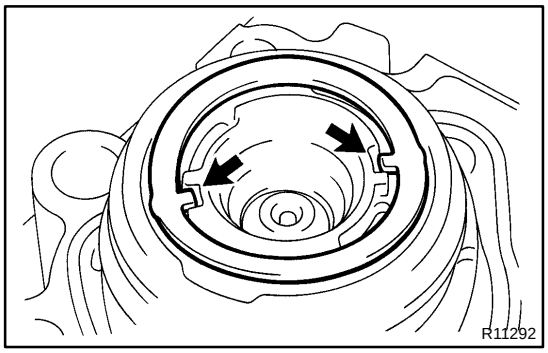

(c) Install the wave washer so that its protrusions fit into the slots in the vane pump side plate rear.

37. INSTALL VANE PUMP HOUSING REAR

(a) Coat a new O–ring with power steering fluid and install it to the vane pump housing rear.
(b) Install the vane pump housing rear with the 4 bolts.
Torque: 24 N·m (245 kgf·cm, 18 ft·lbf)

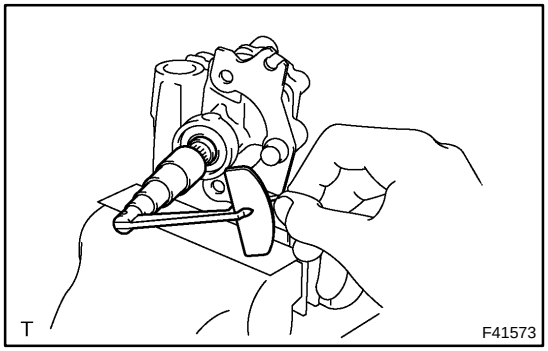

38. MEASURE PS VANE PUMP ROTATION TORQUE(TYPE A VANE PUMP)

(a) Check that the vane pump rotates smoothly without abnormal noise.
(b) Temporarily install the pulley set nut.
(c) Using a torque wrench, check the vane pump rotating torque.
Rotating torque:
0.27 N·m (2.8 kgf·cm, 2.4 in.·lbf) or less

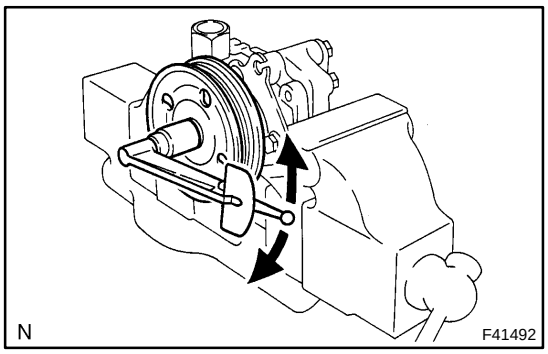

39. MEASURE PS VANE PUMP ROTATION TORQUE(TYPE B VANE PUMP)

(a) Check that the vane pump rotates smoothly without abnormal noise.

(b) Temporarily install the service bolt.
Recommended service bolt:
Thread diameter: 10 mm (0.39 in.)
Thread pitch: 1.25 mm (0.0492 in.)
Bolt length: 50 mm (1.97 in.)

(c) Using a torque wrench, check the vane pump rotating torque.
Rotating torque:
0.27 N·m (2.8 kgf·cm, 2.4 in.·lbf) or less

40. INSTALL VANE PUMP BRACKET REAR(TYPE A VANE PUMP)

(a) Install the vane pump bracket rear with the 2 bolts.
Torque: 43 N·m (438 kgf·cm, 32 ft·lbf)

41. INSTALL VANE PUMP BRACKET REAR(TYPE B VANE PUMP)

(a) Install the vane pump bracket rear with the 2 bolts and 2 nuts.
Torque: 44 N·m (449 kgf·cm, 32 ft·lbf)

42. INSTALL FLOW CONTROL VALVE COMPRESSION SPRING

(a) Coat the flow control valve compression spring with power steering fluid and install it.

43. INSTALL FLOW CONTROL VALVE

(a) Coat the flow control valve with power steering fluid.

(b) Install the flow control valve.

44. INSTALL PRESSURE PORT UNION

(a) Coat a new O–ring with power steering fluid and install it to the pressure port union.

(b) Install the pressure port union.
Torque: 83 N·m (846 kgf·cm, 61 ft·lbf)

45. INSTALL POWER STEERING SUCTION PORT UNION

(a) Coat a new O–ring with power steering fluid and install it to the power steering suction port union.

(b) Install the power steering suction port union with the bolt.
Torque: 13 N·m (133 kgf·cm, 10 ft·lbf)

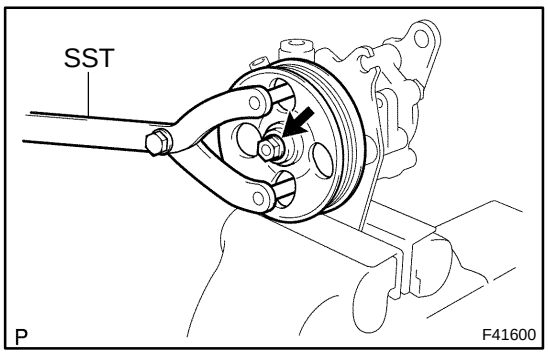

46. INSTALL VANE PUMP PULLEY(TYPE A VANE PUMP)

(a) Install the vane pump pulley to the vane pump shaft.

(b) Using SST, stop the vane pump pulley rotation and install the nut.
SST 09960–10010 (09962–01000, 09963–01000)
Torque: 44 N·m (449 kgf·cm, 32 ft·lbf)

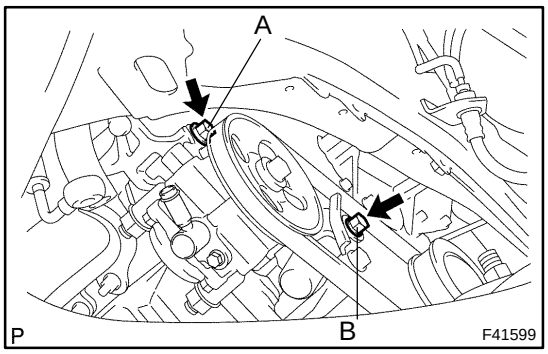

47. INSTALL VANE PUMP ASSY

(a) Temporarily install the vane pump assy with the 2 (A and B) bolts.

48. INSTALL VANE PUMP V BELT

(a) Install the vane pump V belt and adjust the V belt tension (See page 14–140).
(b) Torque the bolt A.
Torque: 43 N·m (438 kgf·cm, 32 ft·lbf)
(c) Torque the bolt B.
Torque: 43 N·m (438 kgf·cm, 32 ft·lbf)

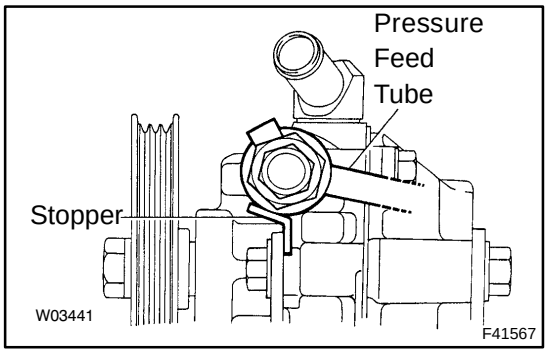

49. CONNECT PRESSURE FEED HOSE

(a) Using a spanner (24 mm) to hold the pressure port union, connect the pressure feed tube assy with the union bolt and a new gasket.
Torque: 51.5 N·m (525 kgf·cm, 38 ft·lbf)

HINT:
Make sure the stopper of the pressure feed tube touches the front bracket as shown in the illustration, then install the union bolt.

50. INSTALL POWER STEERING OIL PRESSURE SWITCH

(a) Install the power steering oil pressure switch to the union bolt.
Torque: 21 N·m (214 kgf·cm, 15 ft·lbf)

NOTICE:
Be careful not to prevent oil from being attached to the connector.

(b) Connect the connector.

51. CONNECT OIL RESERVOIR TO PUMP HOSE NO.1

(a) Connect the oil reservoir to pump hose No.1.
(b) Install the clip.

52. INSTALL FRONT FENDER APRON SEAL RH

53. INSTALL FRONT FENDER LINER RH

54. INSTALL FRONT WHEEL RH
Torque: 103 N·m (1,050 kgf·cm, 76 ft·lbf)

55. BLEED POWER STEERING FLUID

56. INSPECT FLUID LEAK

RACK & PINION POWER STEERING GEAR ASSY

5105R–01

COMPONENTS

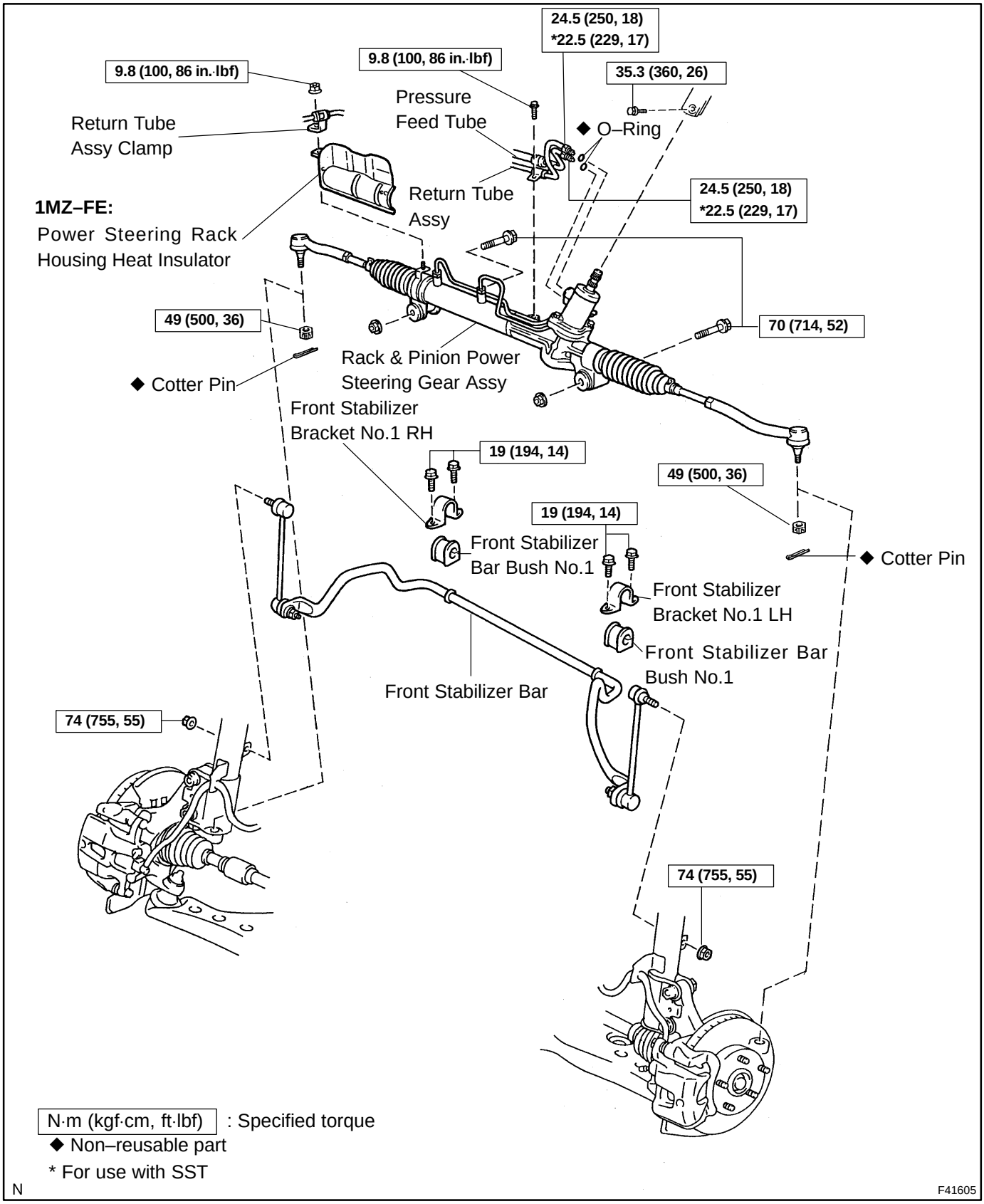

RACK & PINION POWER STEERING GEAR ASSY:

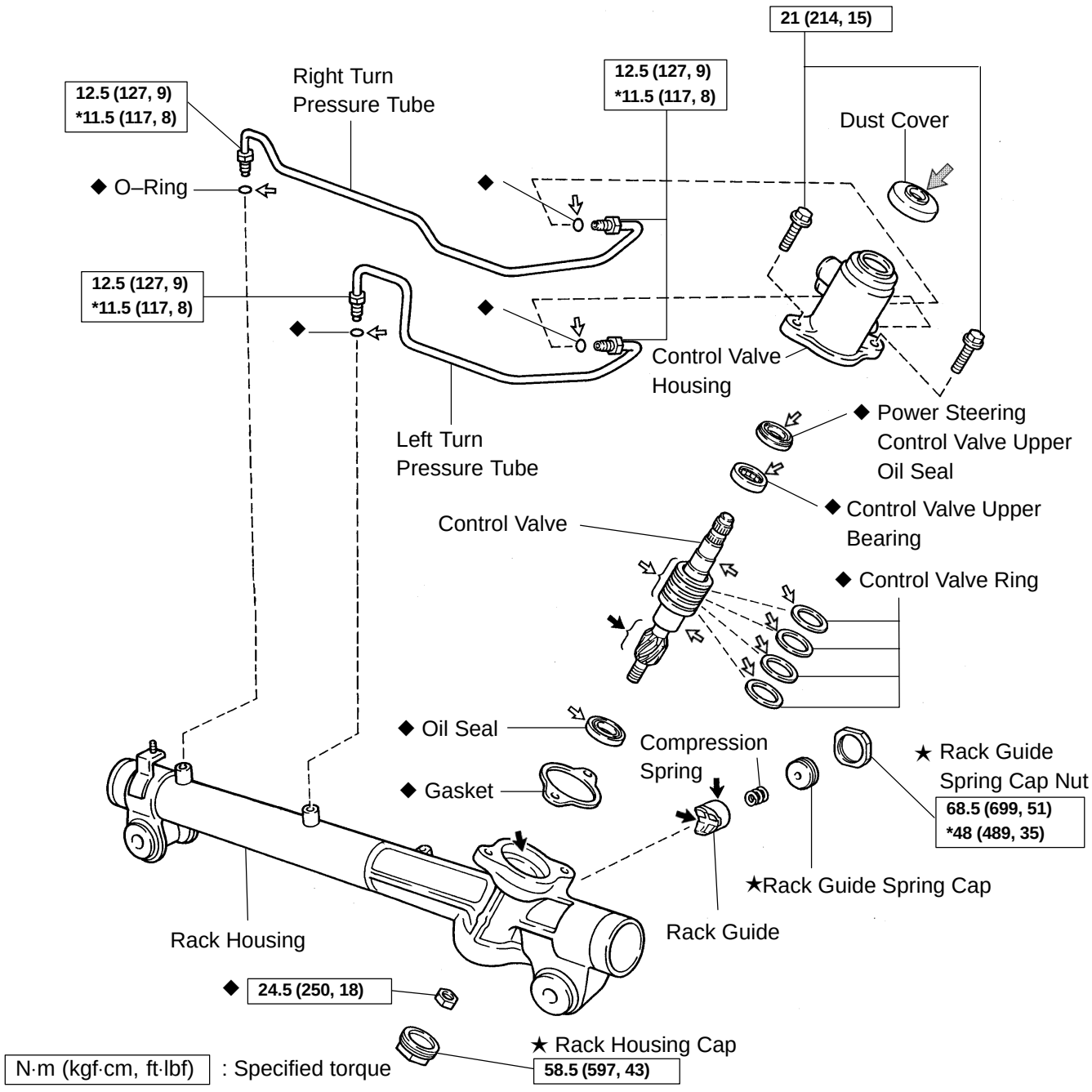

RACK & PINION GEAR POWER STEERING GEAR ASSY:

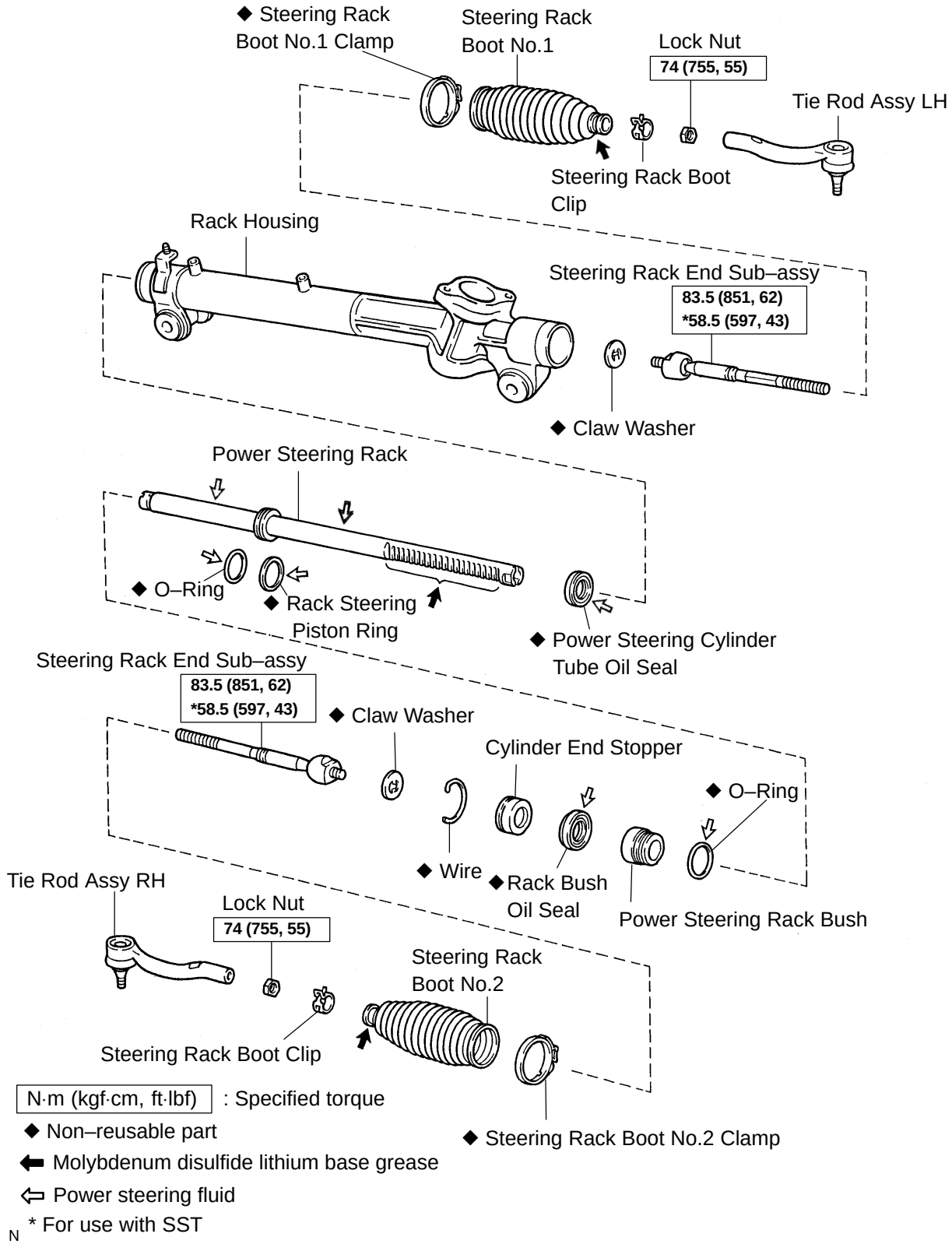

OVERHAUL

NOTICE:

When installing , coat the parts indicated by the arrow with power steering fluid or molybdenum disulfide lithium base grease (See page 51–26).

1. **PRECAUTION(See page 51–1)**
2. **DISCONNECT BATTERY NEGATIVE TERMINAL**
3. **REMOVE HORN BUTTON ASSY**
   (See page 50–9, 50–22)
4. **REMOVE STEERING WHEEL ASSY**
   (See page 50–9, 50–22)
   SST 09950–50013 (09951–05010, 09952–05010, 09953–05020, 09954–05021)
5. **REMOVE FRONT WHEEL**
6. **REMOVE SPIRAL CABLE SUB–ASSY**
   (See page 50–9, 50–22)

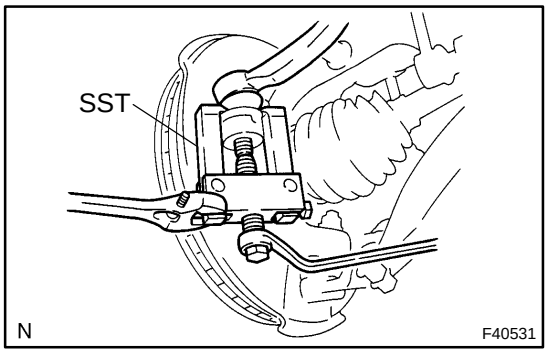

7. DISCONNECT TIE ROD ASSY LH

(a) Remove the cotter pin and nut.
(b) Using SST, remove the tie rod assy LH from the steering knuckle.
SST 09628–62011

8. DISCONNECT TIE ROD ASSY RH

SST 09628–62011

HINT:
Remove the RH side by the same procedures with LH side.

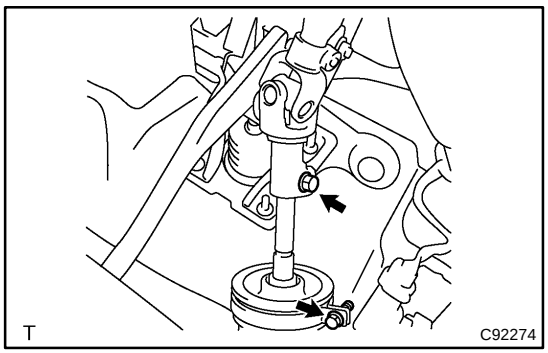

9. DISCONNECT STEERING INTERMEDIATE SHAFT SUB–ASSY

(a) Loosen the bolt and remove the clamp from the steering column hole cover No.1.
(b) Disconnect the steering column hole cover No.2 from the steering column hole cover No.1.
(c) Loosen the bolt.

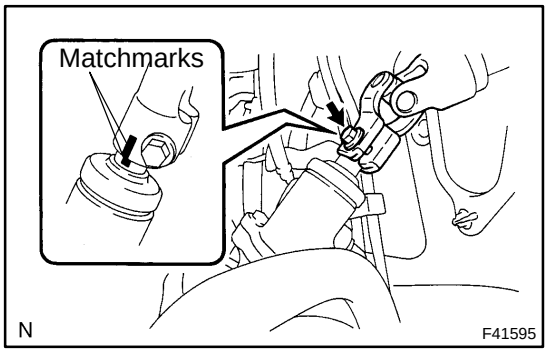

(d) Place matchmarks on the steering intermediate shaft sub–assy and rack & pinion power steering gear assy.
(e) Remove the bolt and separate the steering intermediate shaft sub–assy.

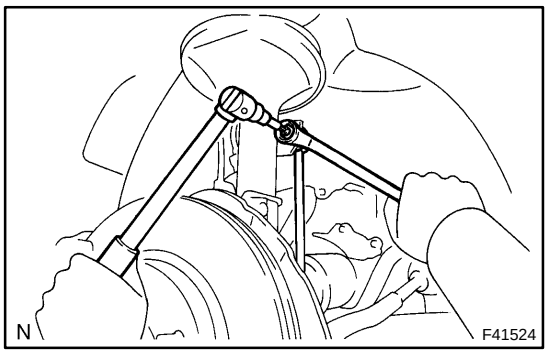

10. DISCONNECT FRONT STABILIZER LINK ASSY LH

(a) Remove the nut and disconnect the front stabilizer link assy from the absorber.

HINT:
If the ball joint turns together with the nut, use a hexagon wrench (6 mm) to hold the stud.

11. DISCONNECT FRONT STABILIZER LINK ASSY RH

HINT:
Remove the RH side by the same procedures with LH side.

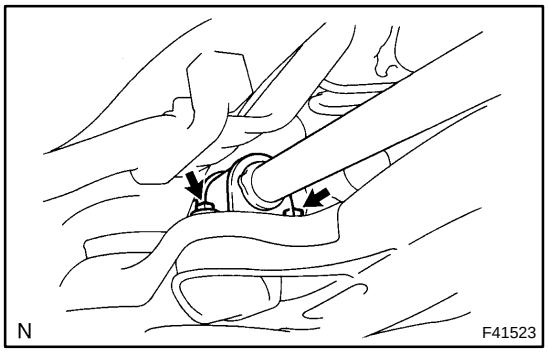

12. REMOVE FRONT STABILIZER BRACKET NO.1 LH

(a) Remove the 2 bolts and disconnect the front stabilizer bracket No.1 LH.

13. REMOVE FRONT STABILIZER BRACKET NO.1 RH

HINT:
Remove the RH side by the same procedures with LH side.

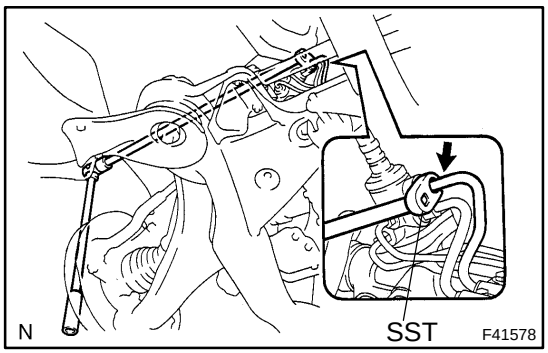

14. DISCONNECT PRESSURE FEED TUBE ASSY

(a) Using SST, disconnect the return tube assy from the rack & pinion power steering gear assy.
SST 09023–12700

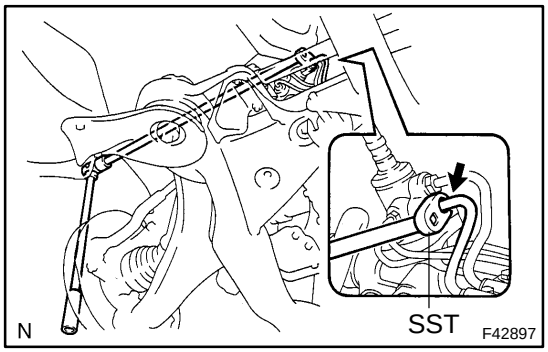

(b) Using SST, disconnect the pressure feed tube assy from the rack & pinion power steering gear assy.
SST 09023–12700

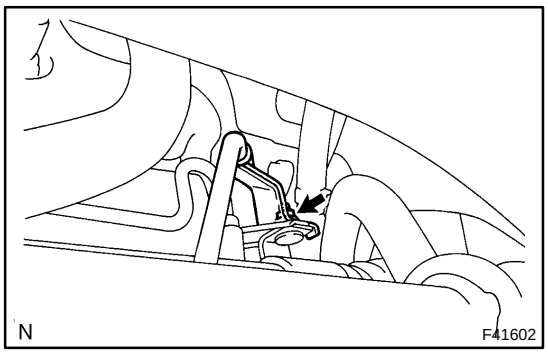

(c) Remove the nut and disconnect the return tube clamp.

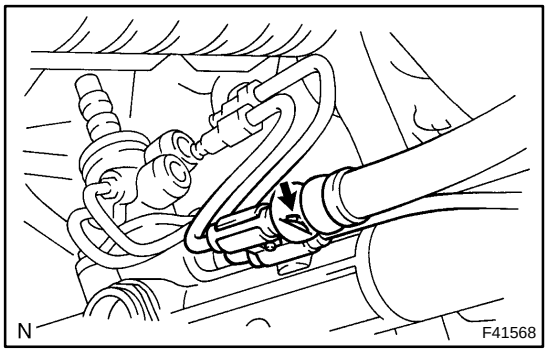

15. REMOVE RACK & PINION POWER STEERING GEAR ASSY

(a) Remove the bolt and disconnect the tube clamp.

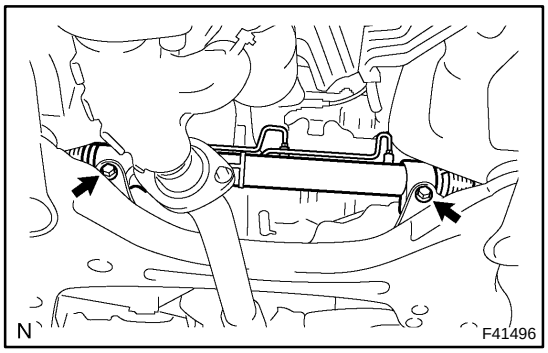

(b) Remove the 2 bolts, nuts and rack & pinion power steering gear assy.

16. REMOVE POWER STEERING RACK HOUSING HEAT INSULATOR(1MZ–FE ENGINE TYPE)

(a) Remove the power steering rack housing heat insulator.

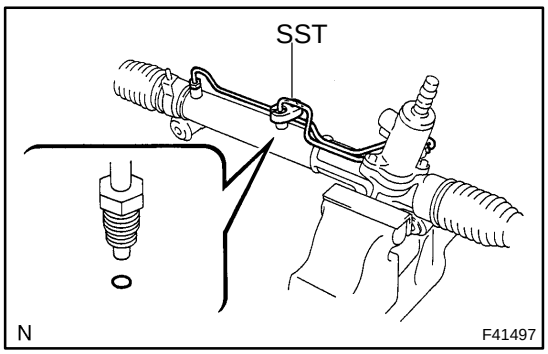

17. REMOVE STEERING LEFT TURN PRESSURE TUBE

(a) Using SST, renove the left turn pressure tube.
SST 09023–38200

(b) Remove the 2 O–rings from the left turn pressure tube.

18. REMOVE STEERING RIGHT TURN PRESSURE TUBE

(a) Using SST, renove the right turn pressure tube.
SST 09023–38200

(b) Remove the 2 O–rings from the right turn pressure tube.

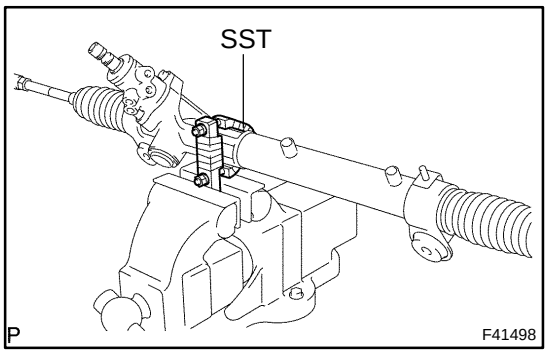

19. FIX RACK & PINION POWER STEERING GEAR ASSY

(a) Using SST, secure the rack & pinion power steering gear assy.
SST 09612–00012

HINT:
Tape the SST before use.

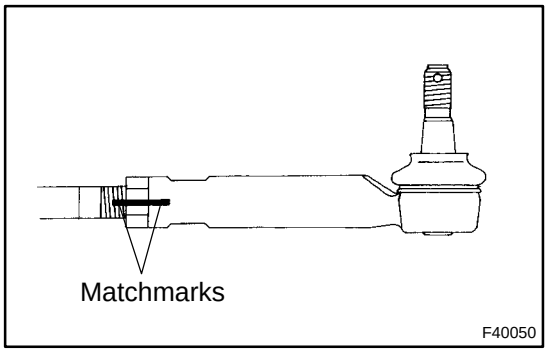

20. REMOVE TIE ROD ASSY LH

(a) Place matchmarks on the tie rod assy LH and steering rack end sub–assy.
(b) Loosen the lock nut, and remove the tie rod assy LH and lock nut.

21. REMOVE TIE ROD ASSY RH

HINT:
Remove the RH side by the same procedures with LH side.

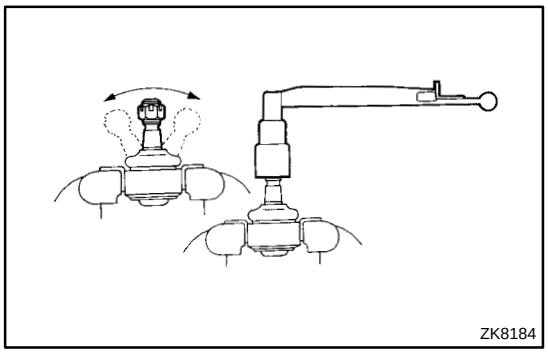

22. INSPECT TIE ROD ASSY LH

(a) Secure the tie rod assy LH in a vise.
(b) Install the nut to the stud bolt.
(c) Flip the ball joint stud back and forth 5 times.
(d) Using a torque wrench, turn the nut continuously at a rate of 3 – 5 seconds per 1 turn and take the torque reading of the 5th turn.
Turning torque:
0.83 – 3.43 N·m (8.5 – 35.0 kgf·cm, 7.3 – 30.4 in.·lbf)

23. INSPECT TIE ROD ASSY RH

HINT:
Remove the RH side by the same procedures with LH side.

24. REMOVE STEERING RACK BOOT CLIP

(a) Remove the 2 steering rack boot clips.

25. REMOVE STEERING RACK BOOT NO.2 CLAMP

(a) Using pliers, remove the steering rack boot No.2 clamp.

NOTICE:
Be careful not to damage the steering rack boot No.2.

26. REMOVE STEERING RACK BOOT NO.1 CLAMP

HINT:
Remove the steering rack boot No.1 clamp by the same procedures with the steering rack boot No.2 clamp.
NOTICE:
Be careful not to damage the steering rack boot No.1.

27. REMOVE STEERING RACK BOOT NO.2

(a) Remove the steering rack boot No.2.

28. REMOVE STEERING RACK BOOT NO.1

HINT:
Remove the steering rack boot No.1 by the same procedures with the steering rack boot No.2.

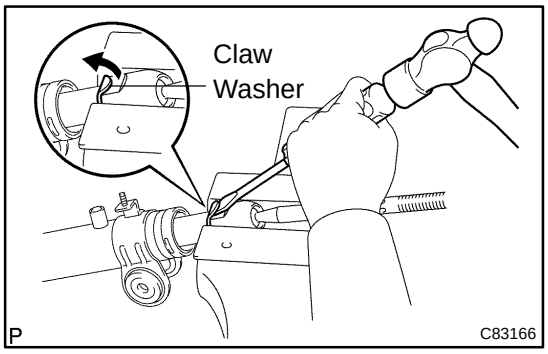

29. REMOVE STEERING RACK END SUB–ASSY

(a) Using a screwdriver and a hammer, unstake the claw washer.

NOTICE:
Avoid any impact to the power steering rack.

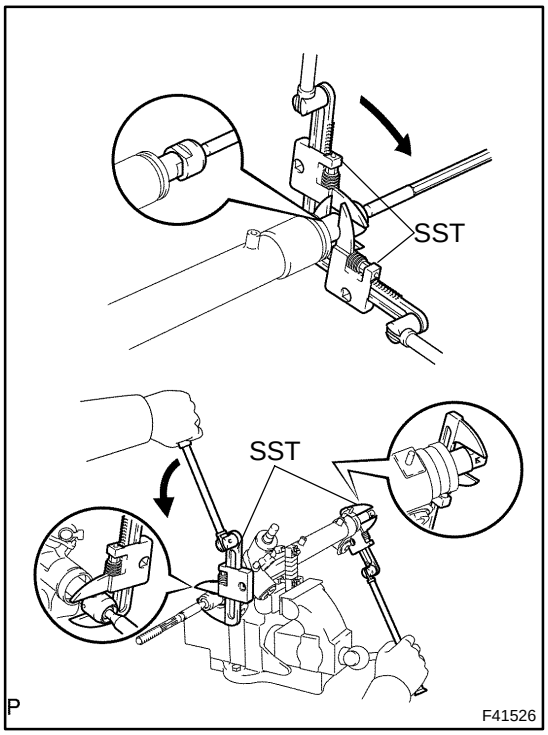

(b) Using 2 SSTs, remove the 2 steering rack ends sub–assy and 2 claw washers.
SST 09922–10010

NOTICE:
- **Use SST 09922–10010 in the direction shown in the illustration.**
- **Securely hold the power steering rack end with a SST.**

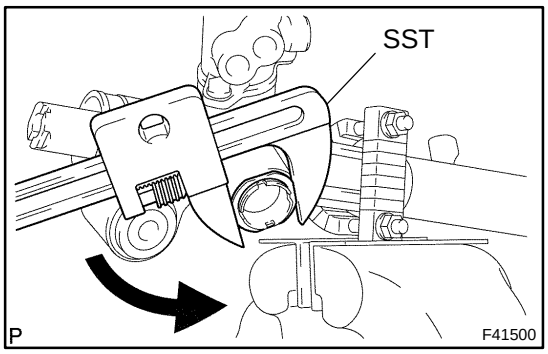

30. REMOVE RACK GUIDE

(a) Using SST, remove the rack guide spring cap nut.
SST 09922–10010

NOTICE:

Use SST 09922–10010 in the direction shown in the illustration.

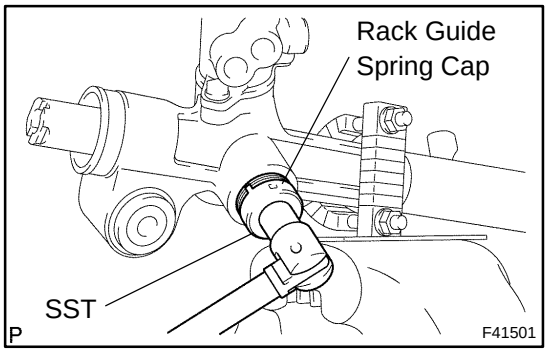

(b) Using SST, remove the rack guide spring cap.
SST 09631–10021

(c) Remove the compression spring and rack guide.

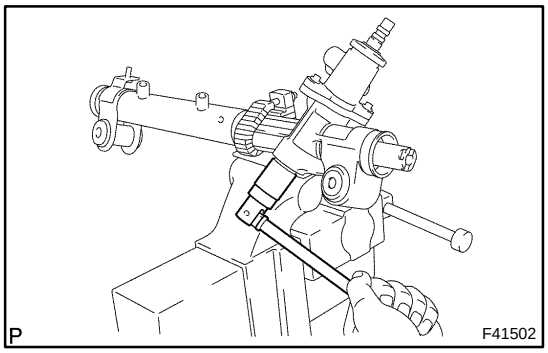

31. REMOVE POWER STEERING CONTROL VALVE

(a) Using a socket wrench (27 mm), remove the rack housing cap.

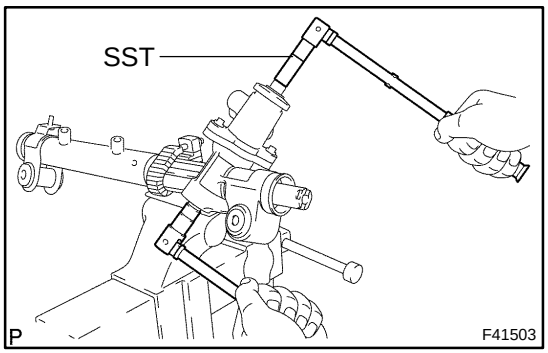

(b) Using SST, hold the control valve and remove the nut.
SST 09616–00011

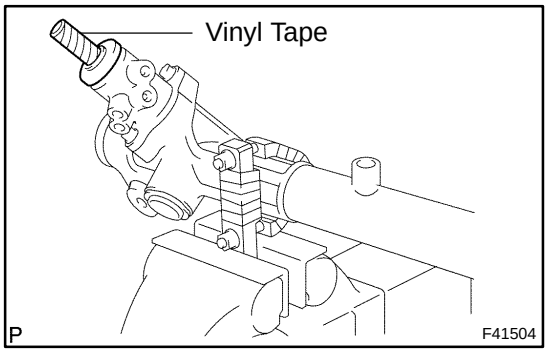

(c) Wind vinyl tape around the serrated part of the control valve.

(d) Remove the dust cover from the control valve housing.

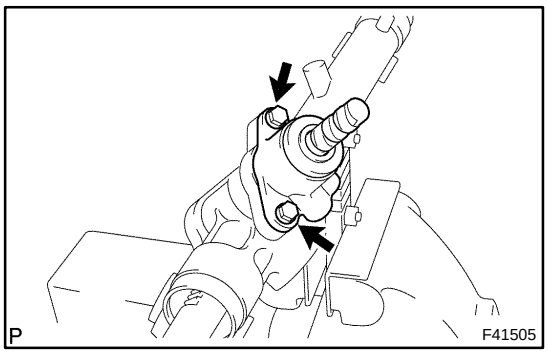

(e) Remove the 2 bolts and control valve.
(f) Remove the gasket.

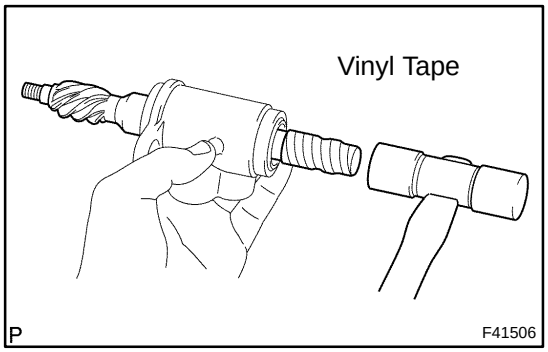

(g) To prevent oil seal lip damage, wind vinyl tape around the serrated part of the control valve.
(h) Using a plastic hammer, remove the control valve with oil seal from the control valve housing.
(i) Remove the oil seal from the control valve.

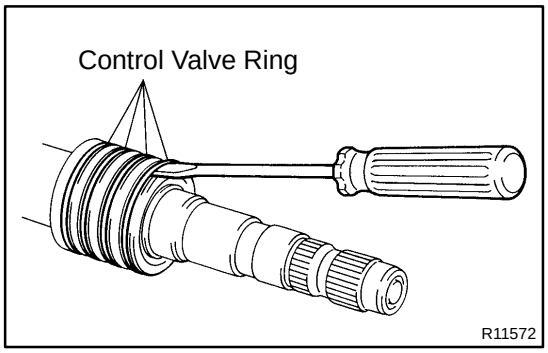

(j) Using a screwdriver, remove the 4 control valve rings.

NOTICE:

Be careful not to damage the grooves for the control valve rings.

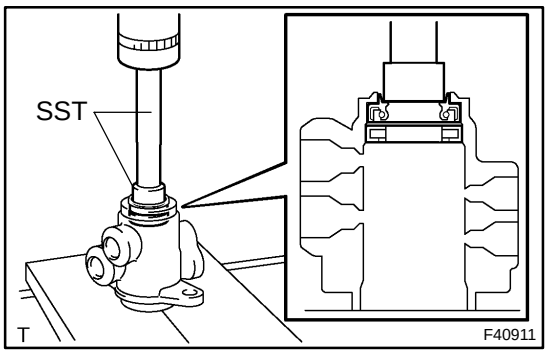

32. REMOVE POWER STEERING CONTROL VALVE UPPER OIL SEAL

(a) Using SST and a press, remove the control valve upper bearing and power steering control valve upper oil seal from the control valve housing.

SST 09950–70010 (09951–07150), 09950–60010 (09951–00250)

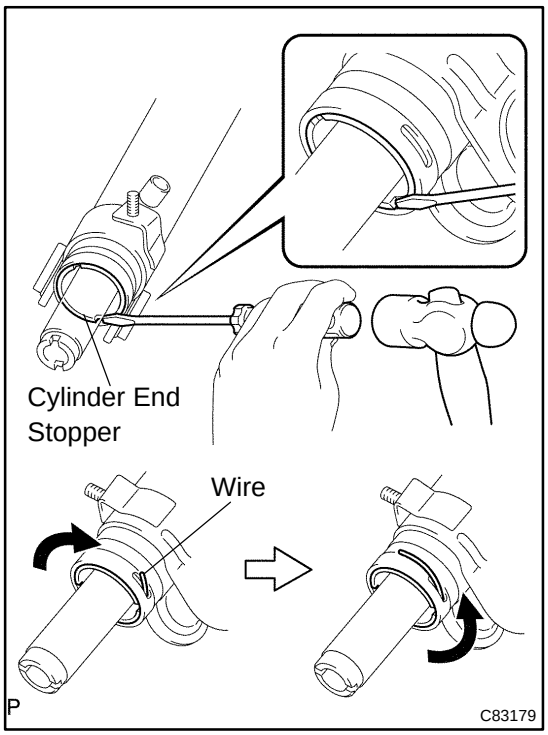

33. REMOVE CYLINDER END STOPPER

(a) Using a screwdriver and a hammer, turn the cylinder end stopper clockwise until the wire end is visible through the service hole.

(b) Using a screwdriver and a hammer, turn the cylinder end stopper counterclockwise, and remove the wire and cylinder end stopper.

34. REMOVE POWER STEERING RACK

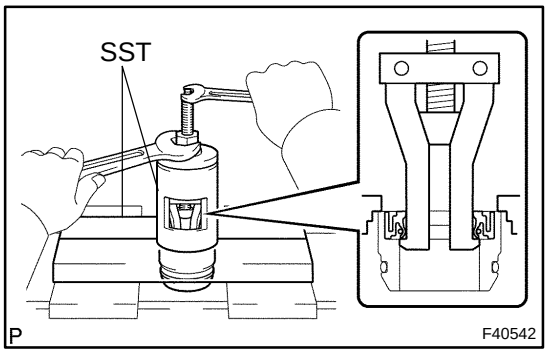

35. REMOVE POWER STEERING RACK BUSH

(a) Remove the power steering rack bush from the power steering rack.

(b) Using SST, remove the rack bush oil seal.
SST 09527–21011, 09612–24014 (09613–22011)

(c) Using a screwdriver, remove the O–ring from the power steering rack bush.

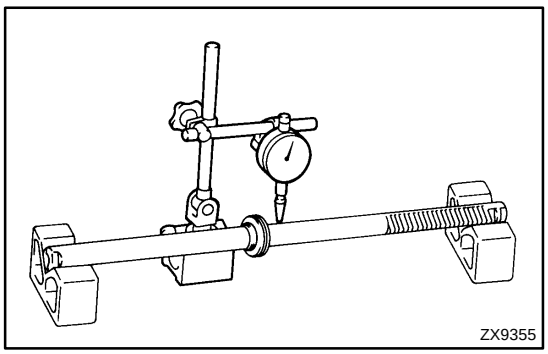

36. INSPECT POWER STEERING RACK

(a) Using a dial indicator, check the power steering rack for runout and for teeth wear and damage.
Maximum runout: 0.3 mm (0.012 in.)

(b) Check the back surface for wear and damage.

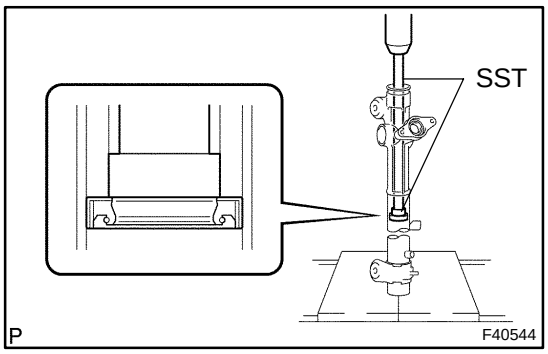

37. REMOVE POWER STEERING CYLINDER TUBE OIL SEAL

(a) Using SST and a press, remove the power steering cylinder tube oil seal.

SST 09950–70010 (09951–07360), 09950–60010 (09951–00290)

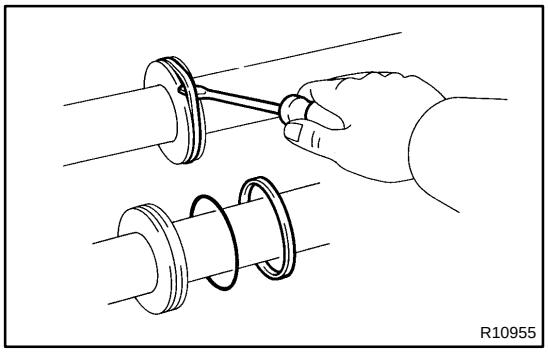

38. REMOVE RACK STEERING PISTON RING

(a) Using a screwdriver, remove the rack steering piston ring and O–ring.

NOTICE:

Be careful not to damage the grooves for rack steering piston ring.

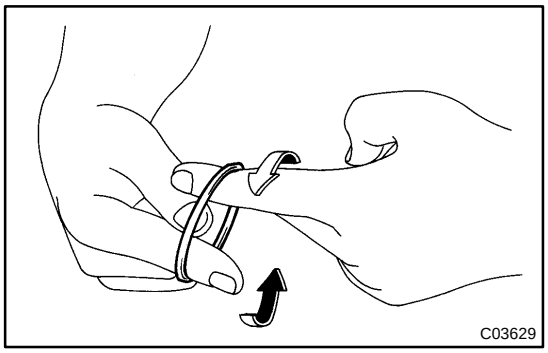

39. INSTALL RACK STEERING PISTON RING

(a) Coat a new O–ring with power steering fluid and install it to the power steering rack.

(b) Expand a new rack steering piston ring with your fingers.

NOTICE:

Be careful not to over expand the rack steering piston ring.

(c) Coat a new rack steering piston ring with power steering fluid.

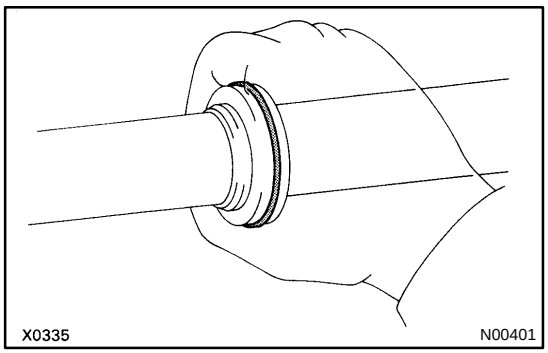

(d) Install the rack steering piston ring to the power steering rack, and settle it down with your fingers.

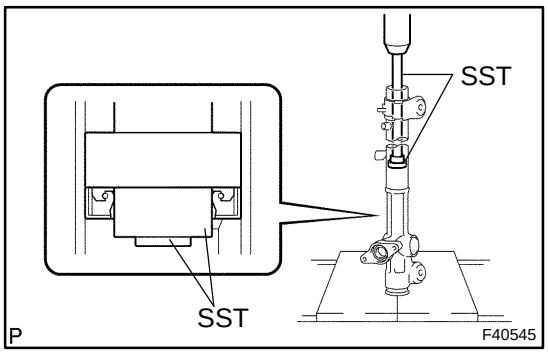

40. INSTALL POWER STEERING CYLINDER TUBE OIL SEAL

(a) Coat a new power steering cylinder tube oil seal lip with power steering fluid.

SST 09950–60010 (09951–00420, 09951–00250, 09952–06010), 09950–70010 (09951–07360)

(b) Using SST and a press, install the power steering cylinder tube oil seal.

NOTICE:

- **Make sure that the power steering cylinder tube oil seal is installed facing in the correct direction.**
- **Take care so that the power steering cylinder tube oil seal will not be reversed as you install it.**

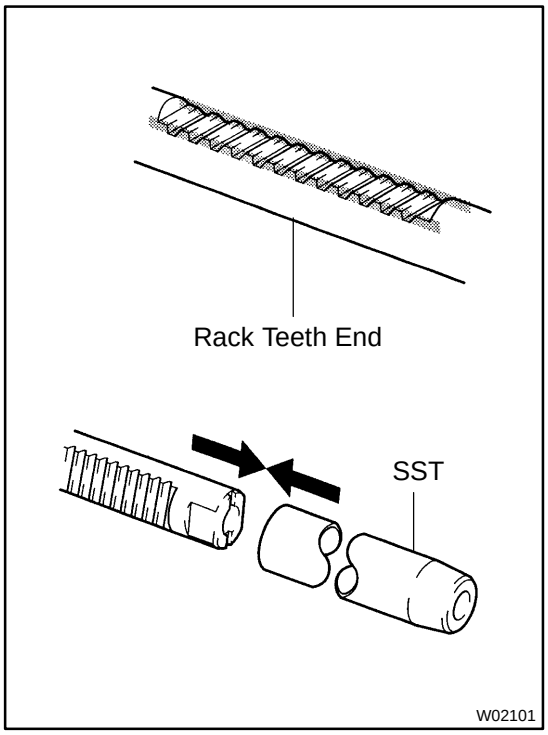

41. INSTALL POWER STEERING RACK

(a) Install SST to the power steering rack.

SST 09631–33010

HINT:

If necessary, scrape the burrs off the power steering rack teeth end and burnish.

(b) Coat the SST with power steering fluid.

(c) Install the power steering rack into the rack housing.

(d) Remove the SST.

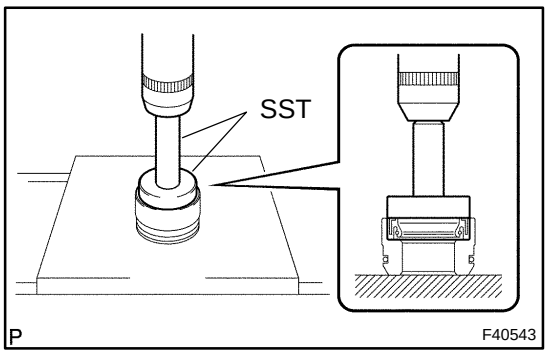

42. INSTALL POWER STEERING RACK BUSH

(a) Using SST and a press, install the rack bush oil seal to the power steering rack bush.

SST 09950–60010 (09951–00400), 09950–70010 (09951–07100)

NOTICE:

Make sure that the rack bush oil seal is installed facing in the correct direction.

(b) Coat a new O–ring with power steering fluid and install it to the power steering rack bush.

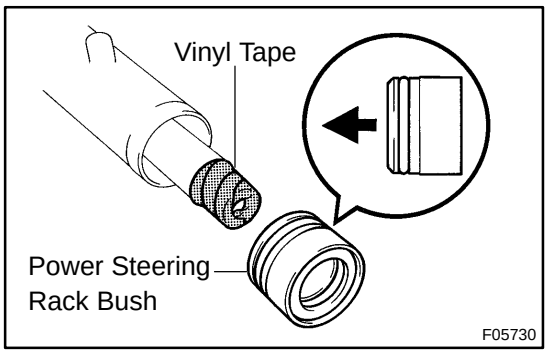

(c) To prevent rack bush oil seal lip damage, wind vinyl tape around the power steering rack end, and apply power steering fluid.
(d) Install the power steering rack bush to the power steering rack.

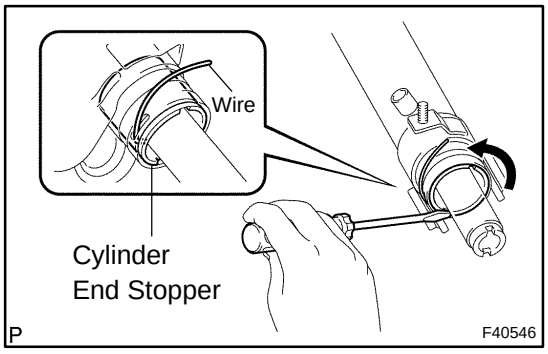

43. INSTALL CYLINDER END STOPPER
(a) Align the installation hole for the wire of the cylinder end stopper with the slot of the rack housing.
(b) Install a new wire into the cylinder end stopper.
(c) Using a screwdriver, turn the cylinder end stopper clockwise by 450 ± 50°.

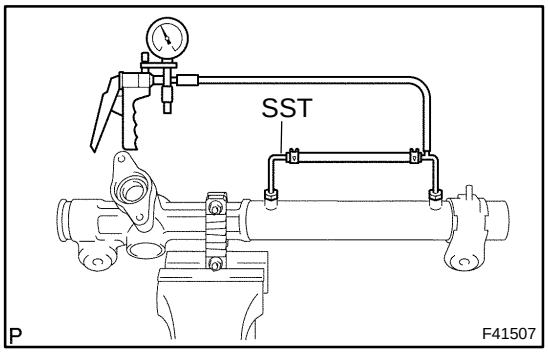

44. AIR TIGHTNESS TEST
(a) Install SST to the rack housing.
SST 09631–12071 (09633–00010)
(b) Apply vacuum of 53 kPa (400 mmHg, 15.75 in.Hg) for about 30 seconds.
(c) Check that there is no change in the vacuum.

If there is a change in the vacuum, check the installation of the oil seals.

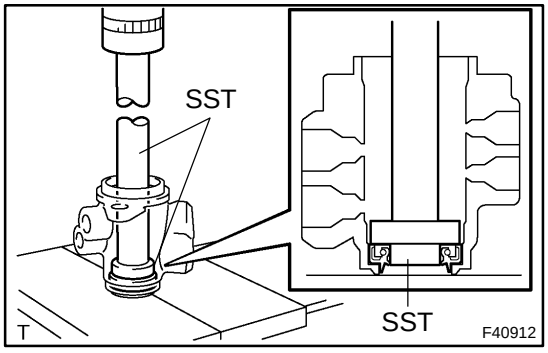

45. INSTALL POWER STEERING CONTROL VALVE UPPER OIL SEAL
(a) Coat a control valve upper bearing and a new power steering control valve upper oil seal with power steering fluid.
(b) Using SST and a press, install the power steering control valve upper oil seal.
SST 09950–70010 (09951–07150), 09950–60010 (09951–00180, 09952–06010, 09951–00320)

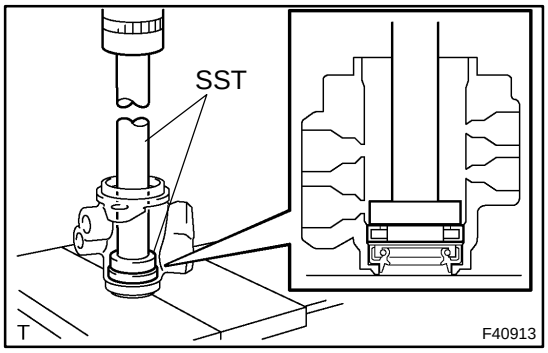

(c) Using SST and a press, install the control valve upper bearing.
SST 09950–70010 (09951–07150), 09950–60010 (09951–00180, 09952–06010, 09951–00340)

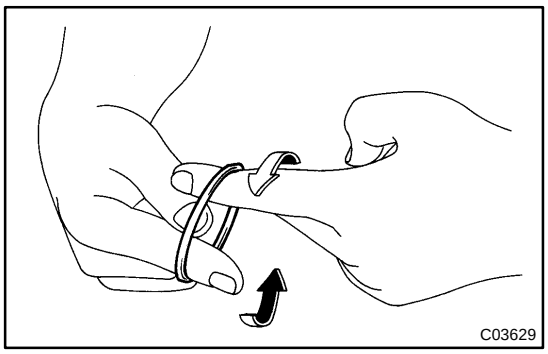

46. INSTALL POWER STEERING CONTROL VALVE

(a) Expand 4 new control valve rings with your fingers.

NOTICE:

Be careful not to over expand the control valve ring.

(b) Coat the 4 control valve rings with power steering fluid.

(c) Install the 4 control valve rings to the control valve, and settle them down with your fingers.

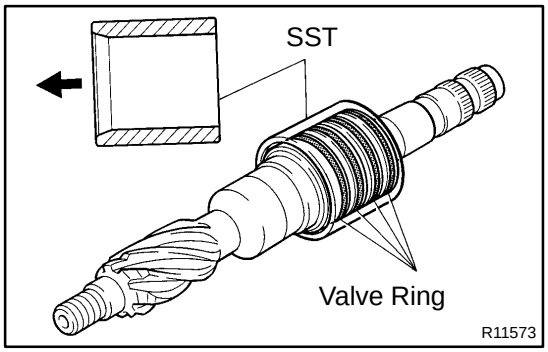

(d) Carefully slide the tapered end of SST over the control valve rings until they fit to the control valve.
SST 09631–22081

NOTICE:

Be careful not to damage the control valve rings.

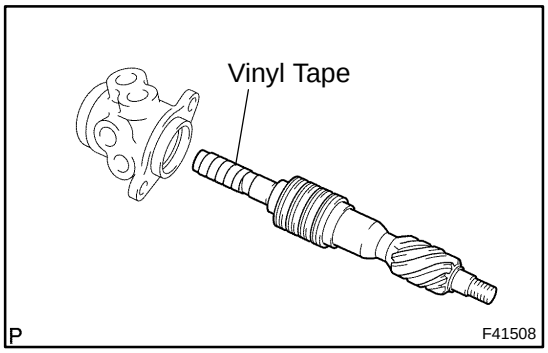

(e) To prevent power steering control valve upper oil seal lip damage, wind vinyl tape around the serrated part of the control valve.

(f) Coat the power steering control valve upper oil seal lip with power steering fluid.

(g) Install the control valve to the control valve housing.

NOTICE:

Be careful not to damage the control valve ring and power steering control valve upper oil seal lip.

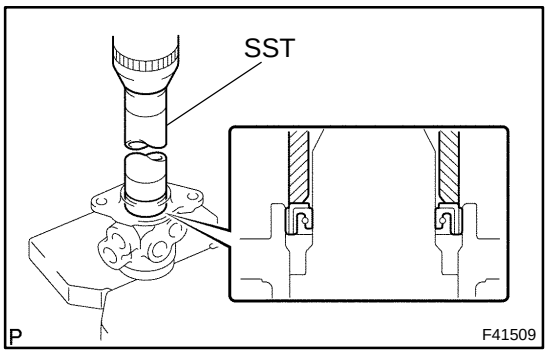

(h) Coat a new oil seal lip with power steering fluid.

(i) Using SST and a press, install the oil seal.
SST 09612–22011

NOTICE:

Make sure that the oil seal is installed facing in the correct direction.

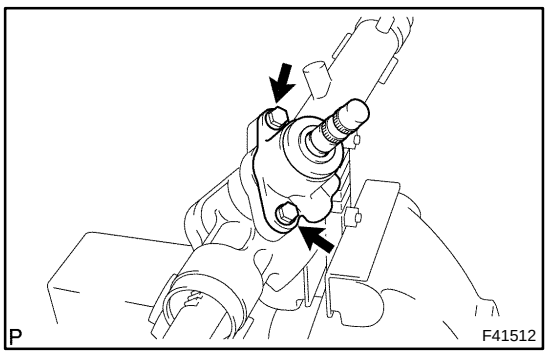

(j) Apply grease to the needle bearing.

(k) Install a new gasket to the control valve housing.

(l) Wind vinyl tape around the serration part of the control valve.

(m) Install the control valve housing to the rack housing with the 2 bolts.
Torque: 21 N·m (214 kgf·cm, 15 ft·lbf)

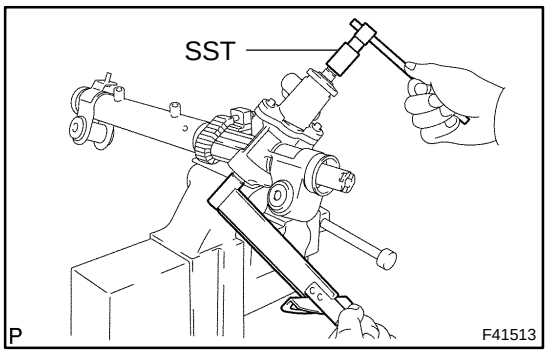

(n) Using SST, stop the control valve rotation and install a new lock nut.
Torque: 24.5 N·m (250 kgf·cm, 18 ft·lbf)
SST 09616–00011

(o) Apply sealant to 2 or 3 threads of the rack housing cap.
Sealant:
Part No. 08833–00080, THREE BOND 1344, LOCTITE 242 or equivalent

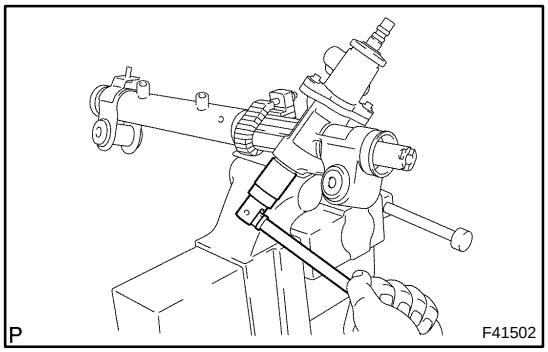

(p) Using a socket wrench (27 mm), install the rack housing cap.
Torque: 58.5 N·m (597 kgf·cm, 43 ft·lbf)

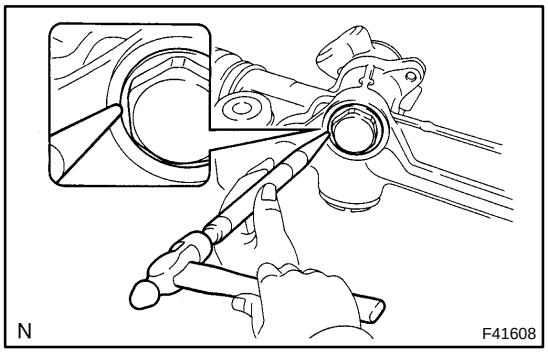

(q) Using a punch and a hummer, stake the rack housing cap and rack housing.

47. INSTALL RACK GUIDE

(a) Install the rack guide.
(b) Install the compression spring.
(c) Apply sealant to 2 or 3 threads of the rack guide spring cap.
Sealant:
Part No. 08833–00080, THREE BOND 1344, LOCTITE 242 or equivalent
(d) Temporarily install the rack guide spring cap.

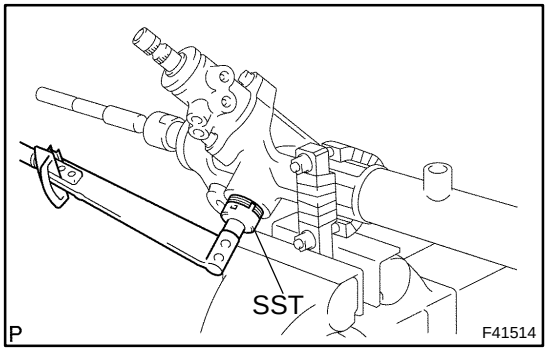

48. ADJUST TOTAL PRELOAD

(a) To prevent the steering rack teeth from damaging the oil seal lip, temporarily install the RH and LH steering rack ends sub–assy.
(b) Using SST, torque the rack guide spring cap.
SST 09631–10021
Torque: 25 N·m (254 kgf·cm, 18 ft·lbf)

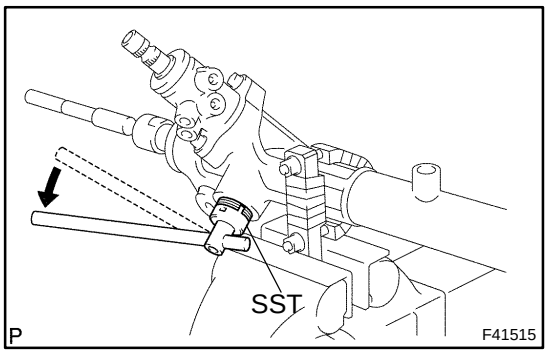

(c) Using SST, loosen the rack guide spring cap.
SST 09631–10021

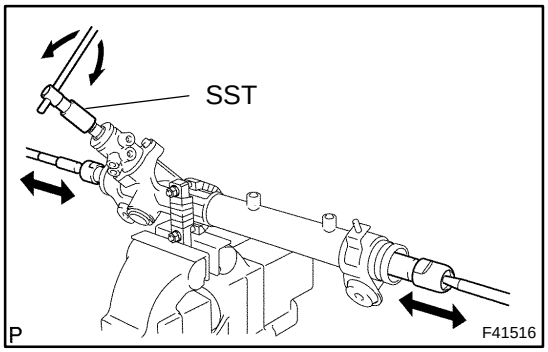

(d) Using SST, turn the control valve to the right and left 1 or 2 times.
SST 09616–00011

(e) Using SST, loosen the rack guide spring cap until the compression spring is not functioning.
SST 09631–10021

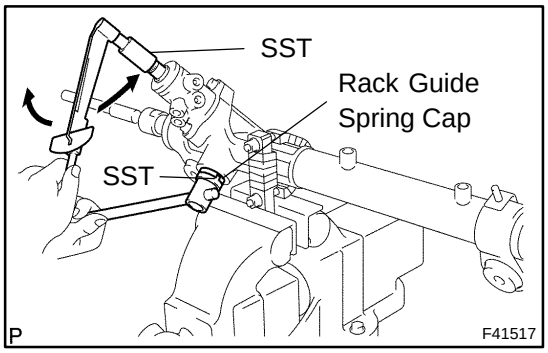

(f) Using SST and a torque wrench, tighten the rack guide spring cap until the preload is within specification.
SST 09616–00011, 09631–10021
Preload (turning):
1.2 – 1.5 N·m (12.2 – 15.3 kgf·cm, 10.6 – 13.3 in.·lbf)

(g) Apply sealant to 2 or 3 threads of the rack guide spring cap nut.
Sealant:
Part No. 08833–00080, THREE BOND 1344, LOCTITE 242 or equivalent

(h) Temporarily install the rack guide spring cap nut.

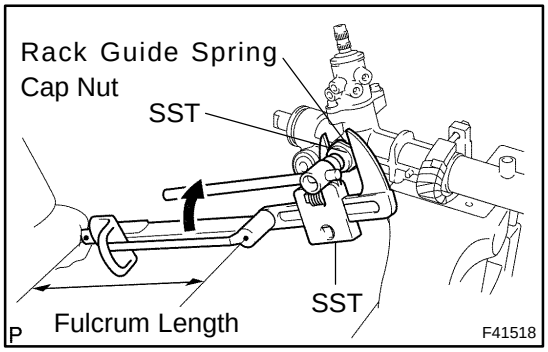

(i) Using SST, hold the rack guide spring cap and using another SST, torque the rack guide spring cap nut.
SST 09616–00011, 09922–10010
Torque: 48 N·m (489 kgf·cm, 35 ft·lbf)

NOTICE:
Use SST 09922–10010 in the direction shown in the illustration.

HINT:
Use a torque wrench with a fulcrum length of 345 mm (13.58 in.).

(j) Precheck the total preload.
Preload (turning):
1.2 – 1.5 N·m (12.2 – 15.3 kgf·cm, 10.6 – 13.3 in.·lbf)

(k) Remove the RH and LH steering rack ends sub–assy.

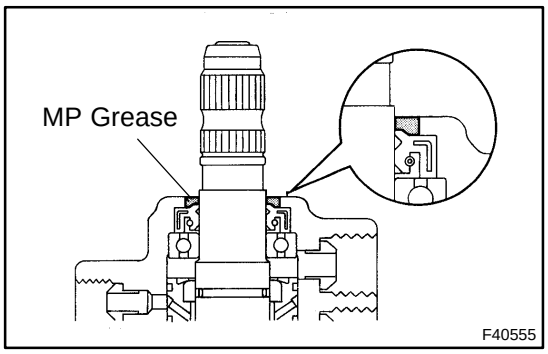

(l) Apply MP grease into the control valve, as shown in the illustration.

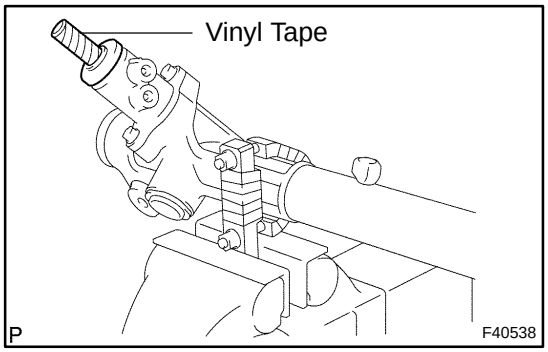

(m) Wind vinyl tape around the serration part of the control valve.

(n) Install the dust cover to the control valve housing.

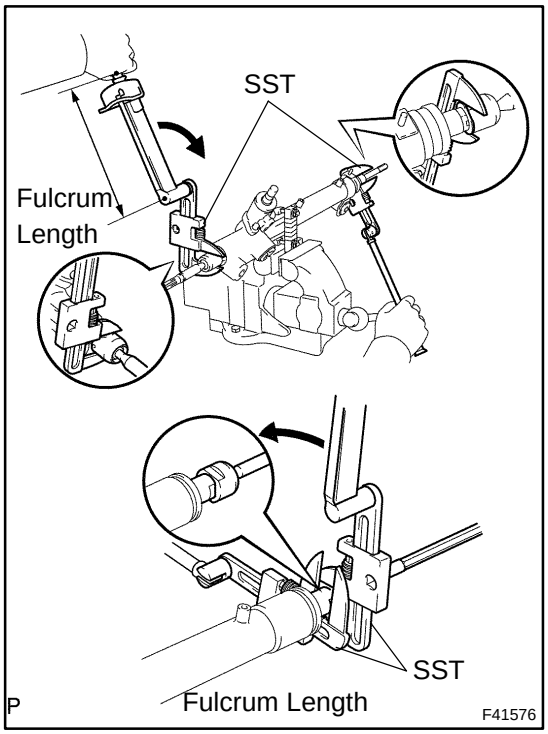

49. INSTALL STEERING RACK END SUB–ASSY

(a) Install a new 2 claw washers, and temporarily install the 2 steering rack ends sub–assy.

HINT:

Align the claws of the claw washer with the power steering rack grooves.

(b) Using 2 SSTs, install the 2 steering rack ends sub–assy.

SST 09922–10010

Torque: 58.5 N·m (597 kgf·cm, 43 ft·lbf)

NOTICE:

Use SST 09922–10010 in the direction shown in the illustration.

HINT:

- Using SST, hold the power steering rack and install the steering rack end sub–assy.
- Use a torque wrench with a fulcrum length of 345 mm (13.58 in.).

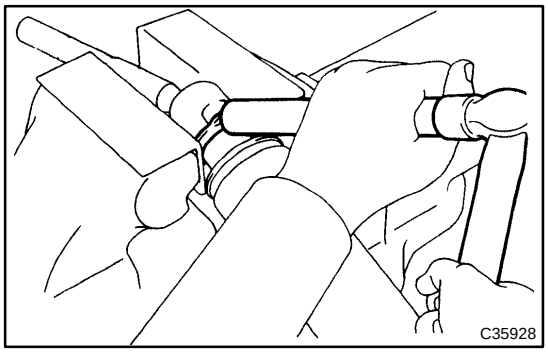

(c) Using a brass bar and a hammer, stake the claw washer.

NOTICE:

Avoid any impact to the power steering rack.

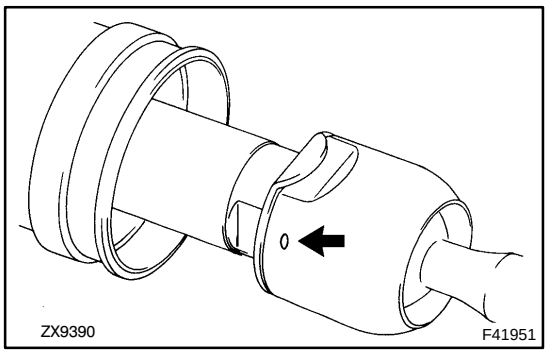

50. INSPECT STEERING RACK END SUB–ASSY

(a) Ensure that the steering rack end sub–assy hole is not clogged with grease.

HINT:

If the hole is clogged, the pressure inside the boot will change after it is assembled and steering wheel is turned.

51. INSTALL STEERING RACK BOOT NO.2

(a) Install the steering rack boot No.2.

52. INSTALL STEERING RACK BOOT NO.1

HINT:

Remove the steering rack boot No.1 by the same procedures with steering rack boot No.2.

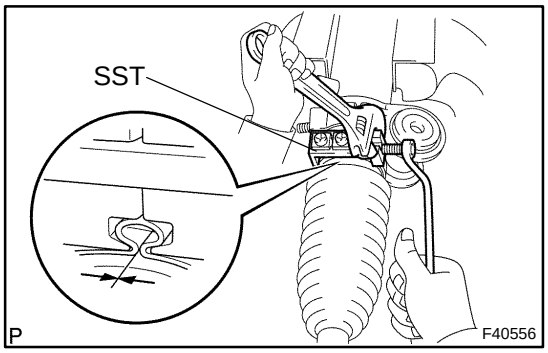

53. INSTALL STEERING RACK BOOT NO.2 CLAMP

(a) Using SST, tighten the steering rack boot No.2 clamp, as shown in the illustration.

SST 09521–24010

Clearance: 3.0 mm (0.118 in.) or less

NOTICE:

Be careful not to damage the boot No.2.

54. INSTALL STEERING RACK BOOT NO.1 CLAMP

SST 09521–24010

NOTICE:

Be careful not to damage the boot No.1.

HINT:

Install the steering rack boot No.1 clamp by the same procedures with steering rack boot No.2 clamp.

55. INSTALL STEERING RACK BOOT CLIP

(a) Using pliers, install the 2 steering rack boot clips.

56. INSTALL TIE ROD ASSY LH

(a) Screw the lock nut and tie rod assy LH onto the steering rack end sub–assy until the matchmarks are aligned.

HINT:

After adjusting toe–in, torque the lock nut.

57. INSTALL TIE ROD ASSY RH

HINT:

Install the RH side by the same procedures with LH side.

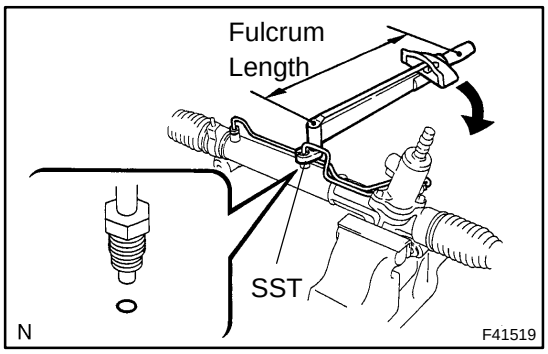

58. INSTALL STEERING LEFT TURN PRESSURE TUBE

(a) Coat 2 new O–rings with power steering fluid and install them to the left turn pressure tube.

(b) Using SST, install the left turn pressure tube to the rack & pinion power steering gear assy.
SST 09023–38200
Torque: 11.5 N·m (117 kgf·cm, 8 ft·lbf)

HINT:

- Use a torque wrench with a fulcrum length of 345 mm (13.58 in.).
- This torque value is effective in the case that SST is parallel to a torque wrench.

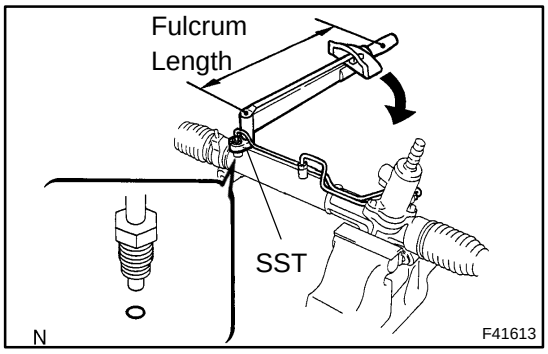

59. INSTALL STEERING RIGHT TURN PRESSURE TUBE

(a) Coat 2 new O–rings with power steering fluid and install them to the right turn pressure tube.

(b) Using SST, install the right turn pressure tube to the rack & pinion power steering gear assy.
SST 09023–38200
Torque: 11.5 N·m (117 kgf·cm, 8 ft·lbf)

HINT:

- Use a torque wrench with a fulcrum length of 345 mm (13.58 in.).
- This torque value is effective in the case that SST is parallel to a torque wrench.

60. INSTALL POWER STEERING RACK HOUSING HEAT INSULATOR(1MZ–FE ENGINE TYPE)

(a) Install power steering rack housing heat insulator.

HINT:

Install nut when installing the return tube clamp.

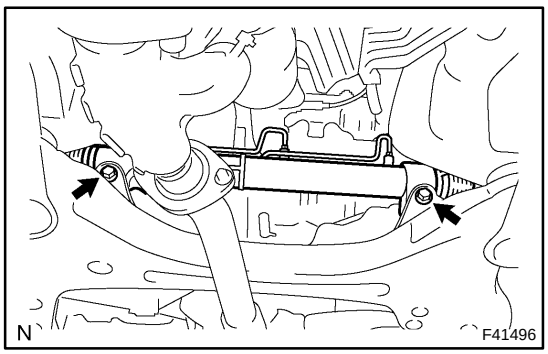

61. INSTALL RACK & PINION POWER STEERING GEAR ASSY

(a) Install the rack & pinion power steering gear assy with the 2 bolts and nuts.
Torque: 70 N·m (714 kgf·cm, 52 ft·lbf)

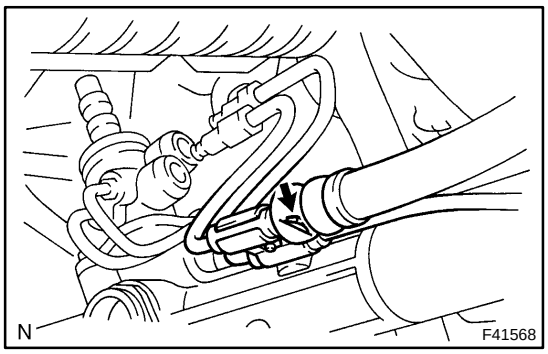

(b) Connect the tube clamp with the bolt.
Torque: 9.8 N·m (100 kgf·cm, 86 in.·lbf)

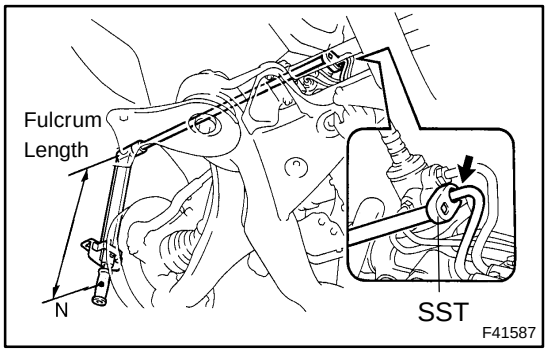

62. CONNECT PRESSURE FEED TUBE ASSY

(a) Using SST, connect the pressure feed tube assy to the rack & pinion power steering gear assy.
SST 09023–12700
Torque: 22.5 N·m (229 kgf·cm, 17 ft·lbf)

HINT:
- Use a torque wrench with a fulcrum length of 300 mm (11.81 in.).
- This torque value is effective in the case that SST is parallel to a torque wrench.

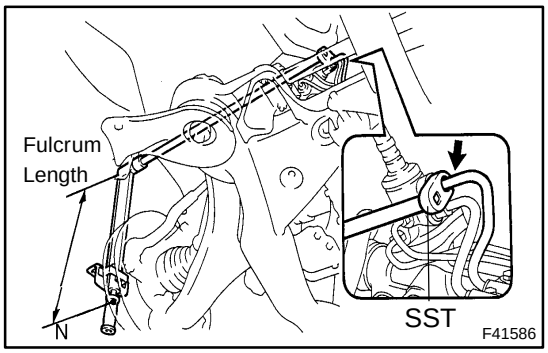

(b) Using SST, connect the return tube assy to the rack & pinion power steering gear assy.
SST 09023–12700
Torque: 22.5 N·m (229 kgf·cm, 17 ft·lbf)

HINT:
- Use a torque wrench with a fulcrum length of 300 mm (11.81 in.).
- This torque value is effective in the case that SST is parallel to a torque wrench.

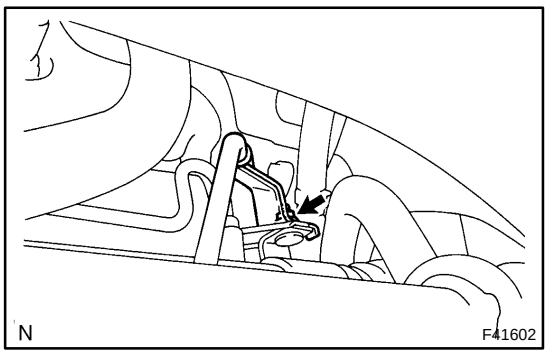

(c) Install the return tube clamp with the nut.
Torque: 9.8 N·m (100 kgf·cm, 86 in.·lbf)

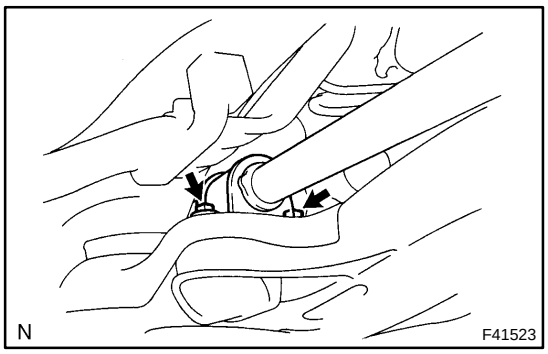

63. INSTALL FRONT STABILIZER BRACKET NO.1 LH

(a) Install the front stabilizer bracket No. 1 LH with the 2 bolts.
Torque: 19 N·m (194 kgf·cm, 14 ft·lbf)

64. INSTALL FRONT STABILIZER BRACKET NO.1 RH

HINT:
Install the RH side by the same procedures with LH side.

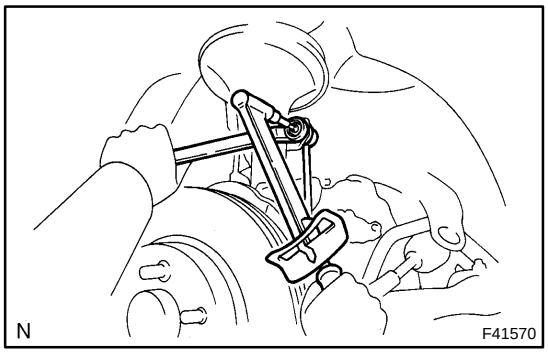

65. CONNECT FRONT STABILIZER LINK ASSY LH

(a) Connect the stabilizer link assy LH to the stabilizer bar with the nut.
Torque: 74 N·m (755 kgf·cm, 55 ft·lbf)

HINT:
If the ball joint turns together with the nut, use a hexagon wrench (6 mm) to hold the stud.

66. CONNECT FRONT STABILIZER LINK ASSY RH

HINT:
Connect the RH side by the same procedures with LH side.

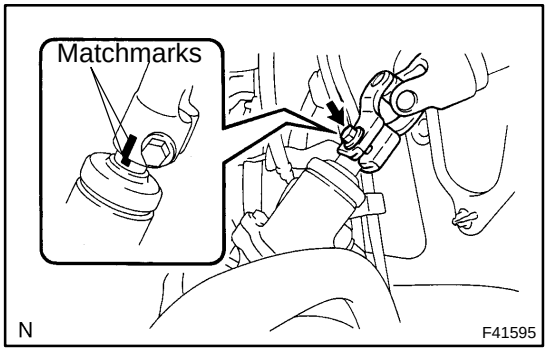

67. CONNECT STEERING INTERMEDIATE SHAFT SUB–ASSY

(a) Align the matchmarks on the intermediate shaft sub–assy and rack & pinion power steering gear assy.
(b) Install the bolt.
Torque: 35.3 N·m (360 kgf·cm, 26 ft·lbf)

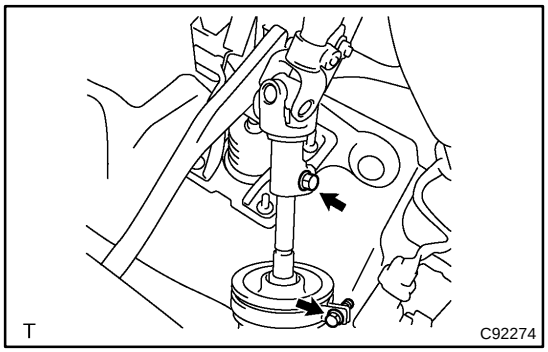

(c) Tighten the bolt.
Torque: 35.3 N·m (360 kgf·cm, 26 ft·lbf)
(d) Install the steering column hole cover No.2 to the steering hole cover No.1.
(e) Connect the clamp to the steering column hole cover No.1 and tighten the bolt.

68. CONNECT TIE ROD ASSY LH

(a) Connect the tie rod assy LH with the nut.
Torque: 49 N·m (500 kgf·cm, 36 ft·lbf)
(b) Install a new cotter pin.

NOTICE:
If the holes for a new cotter pin are not aligned, tighten the nut further up 60°.

69. CONNECT TIE ROD ASSY RH

HINT:
Connect the RH side by the same procedures with LH side.

70. INSTALL FRONT WHEEL
Torque: 103 N·m (1,050 kgf·cm, 76 ft·lbf)
71. ADD POWER STEERING FLUID
72. BLEED POWER STEERING FLUID
73. CHECK POWERSTEERING FLUID LEAKAGE
74. INSTALL SPIRAL CABLE SUB–ASSY
(See page 50–9, 50–22)
75. CENTER SPIRAL CABLE(See page 50–9, 50–22)
76. INSTALL STEERING WHEEL ASSY
(See page 50–9, 50–22)
77. INSTALL HORN BUTTON ASSY
(See page 50–9, 50–22)
78. INSPECT AND ADJUST FRONT WHEEL ALIGNMENT(See page 26–5)
79. INSPECT STEERING WHEEL CENTER POINT
80. INSPECT SRS WARNING LIGHT(See page 05–690)

AIR CONDITIONING SYSTEM

PRECAUTION

550BL–01

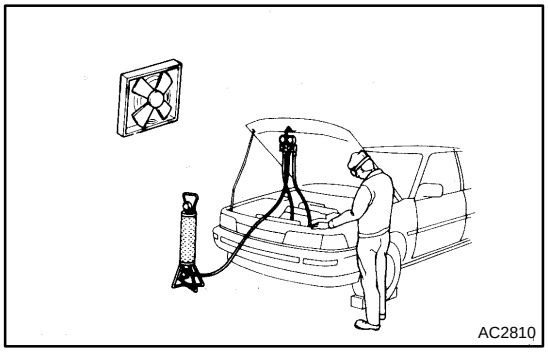

1. DO NOT HANDLE REFRIGERANT IN AN ENCLOSED AREA OR NEAR AN OPEN FLAME

2. ALWAYS WEAR EYE PROTECTION

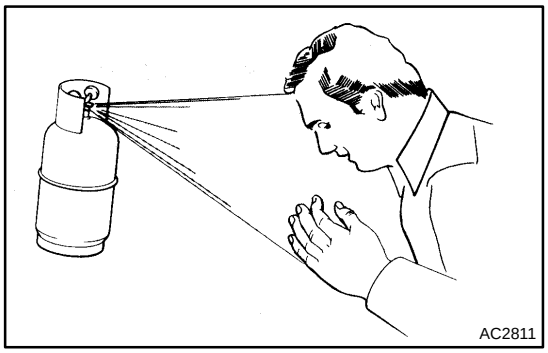

3. BE CAREFUL NOT TO GET LIQUID REFRIGERANT IN YOUR EYES OR ON YOUR SKIN

If liquid refrigerant gets in your eyes or on your skin.

(a) Wash the area with lots of cool water.

CAUTION:

Do not rub your eyes or skin.

(b) Apply clean petroleum jelly to the skin.

(c) Go immediately to a physician or hospital for professional treatment.

4. NEVER HEAT CONTAINER OR EXPOSE IT TO NAKED FLAME

5. BE CAREFUL NOT TO DROP CONTAINER AND NOT TO APPLY PHYSICAL SHOCKS TO IT

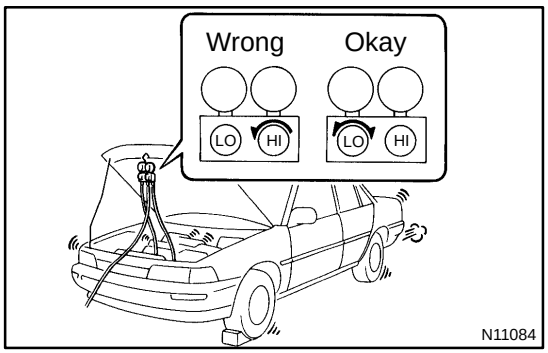

6. DO NOT OPERATE COMPRESSOR WITHOUT ENOUGH REFRIGERANT IN REFRIGERANT SYSTEM

If there is not enough refrigerant in the refrigerant system oil lubrication will be insufficient and compressor burnout may occur, so take care to avoid this, necessary care should be taken.

7. DO NOT OPEN HIGH PRESSURE MANIFOLD VALVE WHILE COMPRESSOR IS OPERATING

If the high pressure valves opened, refrigerant flows in the reverse direction and could cause the charging cylinder to rupture, so open and close the only low pressure valve.

8. BE CAREFUL NOT TO OVERCHARGE SYSTEM WITH REFRIGERANT

If refrigerant is overcharged, it causes problems such as insufficient cooling, poor fuel economy, engine overheating etc.

550BM–01

PROBLEM SYMPTOMS TABLE

Use the table below to help you find the cause of the problem. The numbers indicate the priority of the likely cause of the problem. Check each part in order. If necessary, replace these parts.

Symptom	Suspect Area	See page
Whole functions of the A/C system does not operate.	1. HTR fuse (50 A) 2. HTR fuse (10 A) 3. A/C control assy 4. Wire harness or connector	– – 55–3 –
Air Flow Control : No blower operation	1. Heater Blower motor relay 2. Blower w/ fan motor sub–assy 3. A/C cotrol assy 4. Wire harness or connector	55–7 55–7 55–3 –
Air Flow Control : No blower control	1. Blower w/ fan motor sub–assy 2. Blower resistor 3. A/C control assy 4. Wire harness or connector	55–7 55–7 55–3 –
Air Flow Control : Insufficient air out	1. Blower w/ fan motor sub–assy 2. A/C cotrol assy 3. Wire harness or connector	55–7 55–3 –
Temperature Control : No cool air comes out	1. Volume of refrigerant 2. Drive belt tension 3. Refrigerant pressure 4. Cooler compressor assy 5. Pressure switch No. 1 6. Air mix damper servo sub–assy 7. Condenser fan 8. A/C cotrol assy 9. Wire harness or connector	55–12 55–21 55–12 55–7 55–3 55–7 – 55–3 –
Temperature Control : No warm air comes out	1. Engine coolant volume 2. Air mix damper servo sub–assy 3. Cooler thermistor No. 1 4. A/C cotrol assy 5. Heater radiator unit sub–assy 6. Wire harness or connector	– 55–7 55–7 55–3 – –
Temperature Control : Output air is warmer or cooler than the set temperature or response is slow.	1. Air mix damper servo sub–assy 2. A/C control assy 3. Wire harness or connector	55–7 55–3 –
Temperature Control : No temperature control (only Max. cool or Max. warm)	1. Air mix damper servo sub–assy 2. A/C cotrol assy 3. Wire harness or connector	55–7 55–3 –
No air inlet control	1. Blower damper servo sub–assy 2. A/C cotrol assy 3. Wire harness or connector	55–7 55–3 –
No air outlet control	1. Mode damper servo sub–assy 2. A/C cotrol assy 3. Wire harness or connector	55–7 55–3 –
No engine idle–up when A/C switch ON	1. Cooler compressor assy 2. A/C cotrol assy 3. ECM 4. Wire harness or connector	55–7 55–3 – –
Brightness does not changes when rheostat volume or light control switch it turned.	1. Illumination light system 2. A/C cotrol assy 3. Wire harness or connector	– 55–3 –

ON–VEHICLE INSPECTION

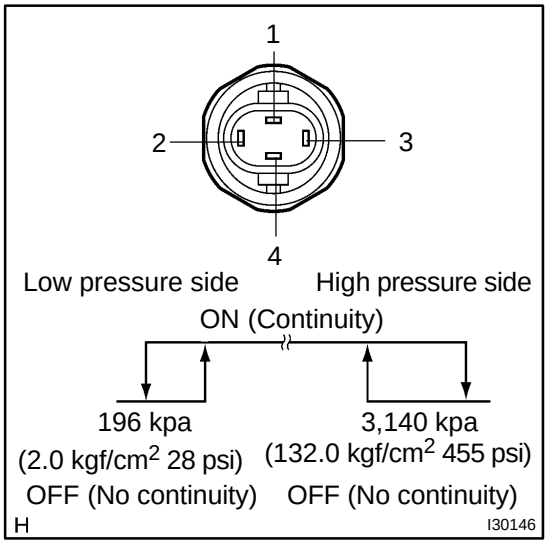

1. INSPECT PRESSURE SWITCH NO.1.

(a) Magnetic clutch control:

Inspect pressure switch operation.

(1) Set on the manifold gauge set.

(2) Connect the positive (+) lead from the ohmmeter to terminal 4 and the negative (–) lead to terminal 1.

(3) Check continuity between terminals when refrigerant pressure is changed, as shown in the illustration.

If operation is not as specified, replace the pressure switch.

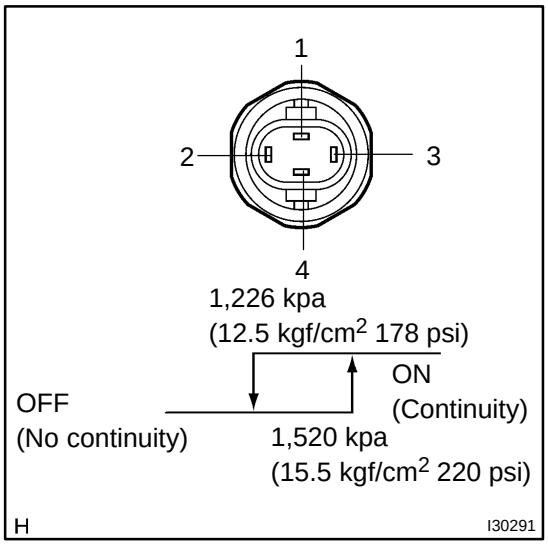

(b) Cooling fan control:

Inspect pressure switch operation.

(1) Connect the positive (+) lead from the ohmmeter to terminal 2 and the negative (–) lead to terminal 3.

(2) Check continuity between terminals when refrigerant pressure is changed, as shown in the illustration.

If operation is not as specified, replace the pressure switch.

2. INSPECT AIR CONDITIONING CONTROL ASSY

(a) Disconnect the connector from controller and inspect the connector on wire harness side, as shown in the chart.

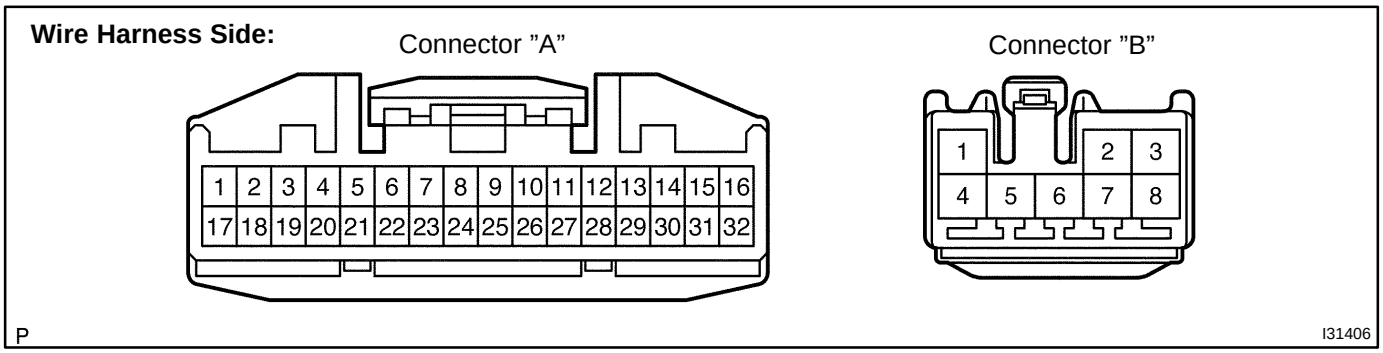

Symbols (Terminal No.)	Condition	Specified condition
+B ⇔ GND (A1 ⇔ A32)	Always	10 – 14 V
IG ⇔ GND (A2 ⇔ A32)	Ignition switch: ON	0 → 10 – 14 V
GND ⇔ Body ground (A32 ⇔ Body ground)	Always	Continuity

If circuit is as specifies, try replacing the controller with a new one. If the circuit is not as specified, inspect the circuits connected to other parts.

(b) Connect the connector to heater controller and inspect wire harness side from the back side, as shown in the chart below.

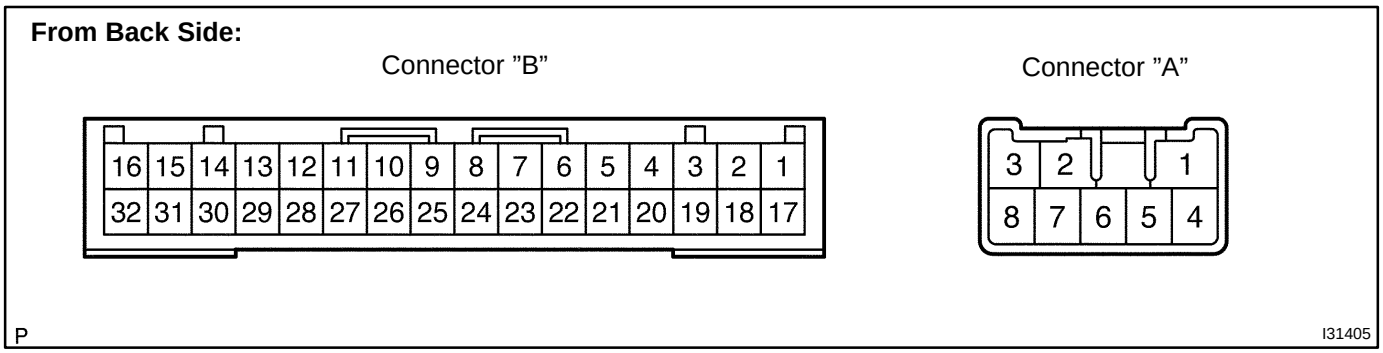

Symbols (Terminal No.)	Condition	Specified condition
E ⇔ Body ground (B1 ⇔ Body ground)	Always	Continuity
LO ⇔ E (B3 ⇔ B1)	Blower switch: OFF → LO	0 → Below 1.0 V
M1 ⇔ E (B5 ⇔ B1)	Ignition switch: ON Blower switch: OFF → M1	0 → Below 1.0 V
M2 ⇔ E1 (B6 ⇔ B1)	Ignition switch: ON Blower switch: OFF → M2	0 → Below 1.0 V
HI ⇔ E1 (B7 ⇔ B1)	Ignition switch: ON Blower switch: OFF → HI	0 → Below 1.0 V
REC ⇔ GND (A10 ⇔ A32)	Ignition switch: ON R/F switch: FRESH → RECIRCULATION	Open → Below 1.0 V
FRS ⇔ GND (A11 ⇔ A32)	Ignition switch: ON R/F switch: RECIRCULATION → FRESH	Open → Below 1.0 V

Symbols (Terminal No.)	Condition	Specified condition
TEST ⇔ SG (A27 ⇔ A30)	Ignition switch: ON Set temp: MAX. HOT → MAX. COLD	Below 1 V → Above 4 V
A/C ⇔ GND (A12 ⇔ A32)	Ignition switch: ON Blower switch: ON (Lo, M1, M2, Hi) A/C switch:OFF → ON	Below 2 V → Above 6 V
A/CB ⇔ GND (A4 ⇔ A32)	Ignition switch: ON Blower switch:OFF → ON (Lo, M1, M2, Hi)	0 → 10 – 14 V
ACID ⇔ GND (A13 ⇔ A32)	Ignition switch: ON Blower switch: ON (Lo, M1, M2, Hi) A/C switch: OFF → ON	Open → Below 1.0 V
S5 ⇔ GND (A25 ⇔ A32)	Ignition switch: LOCK → ON	0 → 5.0 V
SG ⇔ Body ground (A30 ⇔ Body ground)	Always	Continuity
TCOL ⇔ GND (A7 ⇔ A32)	Ignition switch: ON Set temp.: MAX. HOT → MAX. COLD	Below 1.0 V → 10 – 14 V
THOL ⇔ GND (A8 ⇔ A32)	Ignition switch: ON Set temp.: MAX. COLD → MAX. HOT	Below 1.0 V → 10 – 14 V
FACE ⇔ GND (A21 ⇔ A32)	Ignition switch: ON Mode select: Except FACE → FACE	Below 1.0 V → 0 V
DEF ⇔ GND (A17 ⇔ A32)	Ignition switch: ON Mode select: Except DEF → DEF	Below 1.0 V → 0 V
F/D ⇔ GND (A18 ⇔ A32)	Ignition switch: ON Mode select: Except F/D → F/D	Below 1.0 V → 0 V
FOOT ⇔ GND (A19 ⇔ A32)	Ignition switch: ON Mode select: Except FOOT → FOOT	Below 1.0 V → 0 V
B/L ⇔ GND (A20 ⇔ A32)	Ignition switch: ON Mode select: Except B/L → B/L	Below 1.0 V → 0 V

If circuit is as specified, try replacing the controller with a new one. If the circuit is not as specified, inspect the circuits connected to other parts.

3. INSPECT ECM

From Back Side:

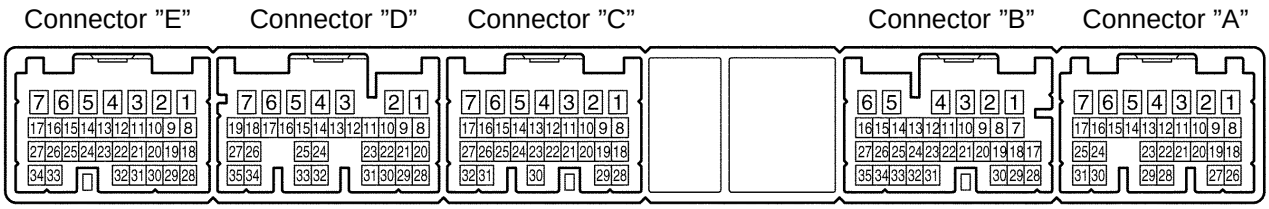

Symbols (Terminal No.)	Condition	Specified condition
PRE ⇔ Body ground (B1 ⇔ Body ground)	Start engine Refrigerant pressure: Normally → Less than 0.19 Mpa (2.0 kgf·cm2, 28 psi) or more than 1.34 Mpa (32 kgf·cm22, 2,455 psi)	0 → Below 1.0 V
A/CS ⇔ Body ground (B31 ⇔ Body ground)	Ignition switch: ON A/C switch: OFF → ON	0 → Below 1.0 V
THR ⇔ E2 (B32 ⇔ E28)	Evaporator temp.: 0 °C (32 °F) → 15 °C (59 °F)	2.0 – 2.4 → 1.4 – 1.8 V
A/CI ⇔ Body ground (B33 ⇔ Body ground)	Ignition switch: ON Magnetic clutch: OFF → ON	0 → Below 1.0 V

Symbols (Terminal No.)	Condition	Specified condition
LCKI ⇔ Body ground (C23 ⇔ Body ground)	Ignition switch: ON Magnetic clutch: OFF → ON	Pulse generation
E2 ⇔ Body ground (E28 ⇔ Body ground)	Always	Continuity
PR2 ⇔ Body ground*1 (C30 ⇔ Body ground)	Start engine Refrigerant pressure: Normally → Less than 0.19 Mpa (2.0 kgf·cm2, 28 psi) or more than 1.34 Mpa (32 kgf·cm22, 2,455 psi)	0 → Below 1.0 V

*1: 2AZ–FE

If circuit is as specified, try replacing the amplifier with a new one. If the circuit is not as specified, inspect the circuits connected to other parts.

INSPECTION

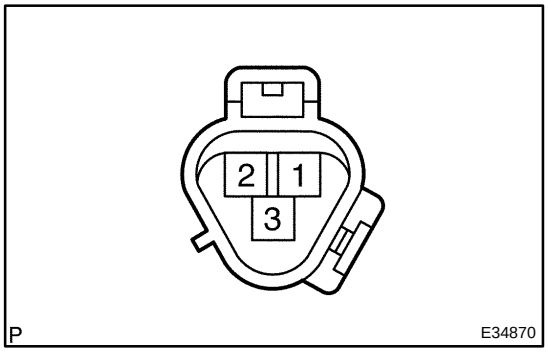

1. COOLER COMPRESSOR ASSY

(a) Connect the positive (+) lead from the battery to terminal 3 and the negative (–) lead to the body ground.

(b) Check that the magnetic clutch energized.

If operation is not as specified, replace the magnet clutch assy.

(c) Measure resistance between terminals 2 and 4.

Standard resistance: 165 – 205 Ω at 20 °C (68 °F)

If resistance is not as specified, replace the cooler compressor assy.

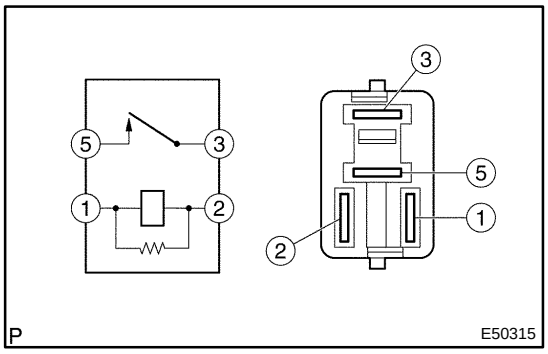

2. MAGNET–CLUTCH RELAY

Condition	Tester connection	Specified condition
Constant	1 – 2	Continuity
Apply B + between terminals 1 and 2.	3 – 5	Continuity

If continuity is not as specified, replace the magnet–clutch relay.

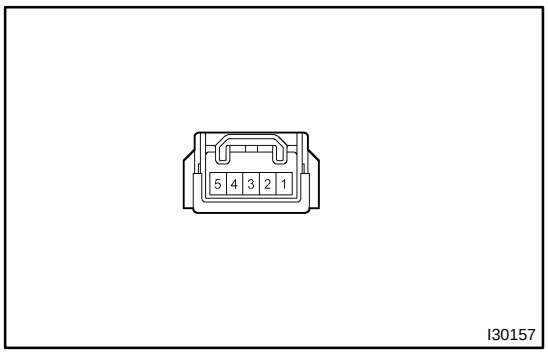

3. AIRMIX DAMPER SERVO SUB–ASSY

(a) Inspect servomotor operation.
  (1) Connect the positive (+) lead from the battery to terminal 4 and negative (–) lead to terminal 5, then check that the arm turns to ”COLD” side smoothly.
  (2) Connect the positive (+) lead from the battery to terminal 5 and negative (–) lead to terminal 4, then check that the arm turns to ”HOT” side smoothly.

If operations are not as specified, replace the air mix servomotor.

(b) Inspect position sensor resistance.
Measure resistance between terminals at servomotor arm each position as shown in the chart.

Tester connection	Condition	Specified condition
1 – 2	Constant	4.2 – 7.8 kΩ
1 – 3	Arm position at ”COLD”	3.4 – 6.2 kΩ
1 – 3	Arm position at ”HOT”	0.8 – 1.6 kΩ

If resistance is not as specified, replace the servomotor.

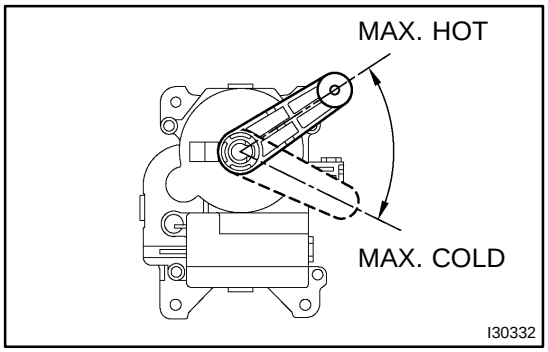

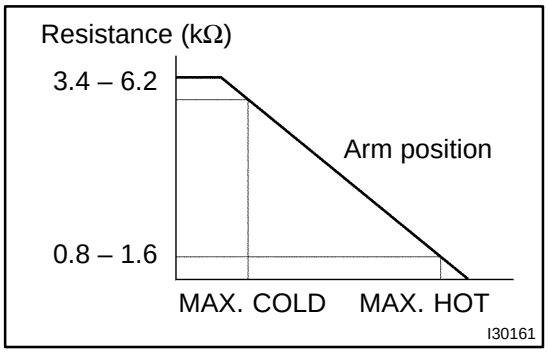

4. MODE DAMPER SERVO SUB–ASSY

(a) Inspect servomotor operation.
(b) Connect the positive (+) lead from the battery to terminal 7 and the negative (–) lead to terminal 8.
(c) Connect the negative (–) lead from the battery to each terminal, as shown in the chart and check that the shaft rotates at each position, as shown in the illustration.

Connected terminal	Position
1	DEF
2	FOOT/DEF
3	FOOT
5	B/L
6	FACE

If operation is not as specified, replace the servomotor.

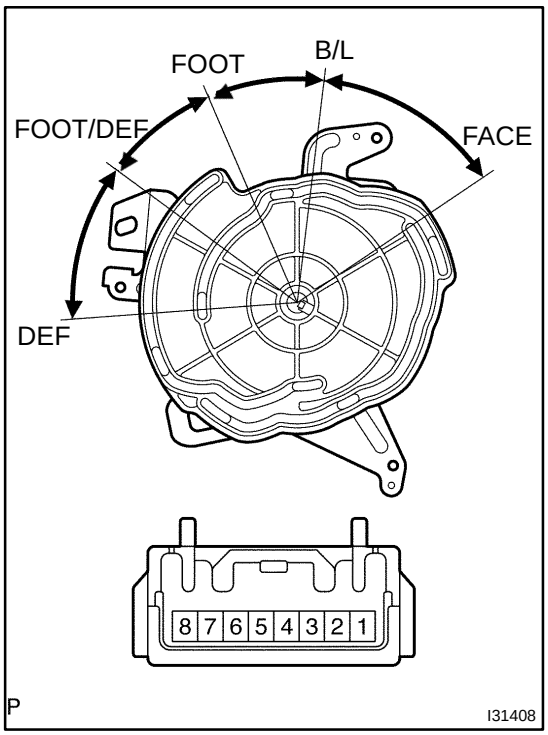

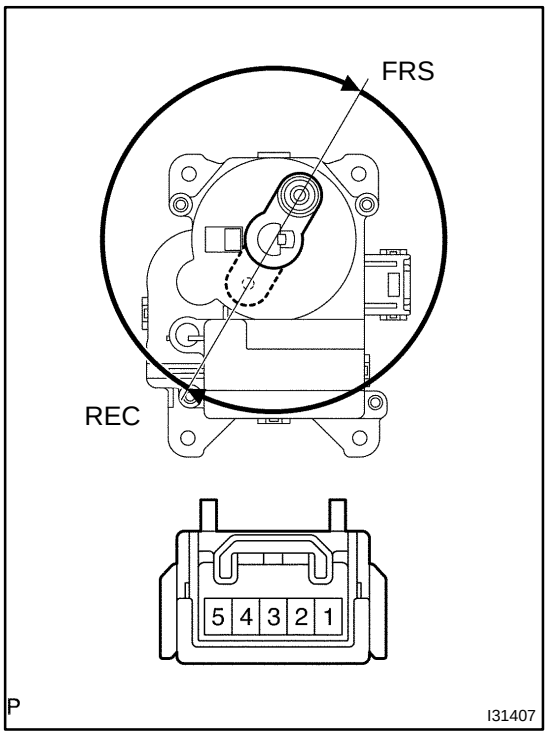

5. RECIRCULATION DAMPER SERVO SUB–ASSY

(a) Inspect servomotor operation.
   (1) Connect the positive (+) lead from the battery to terminal 5 and negative (–) lead to terminal 1, then check that the arm turns to ”REC” side smoothly.
   (2) Connect the positive (+) lead from the battery to terminal 5 and negative (–) lead to terminal 2, then check that the arm turns to ”FRS” side smoothly.

If operations are not as specified, replace the mode damper servomotor.

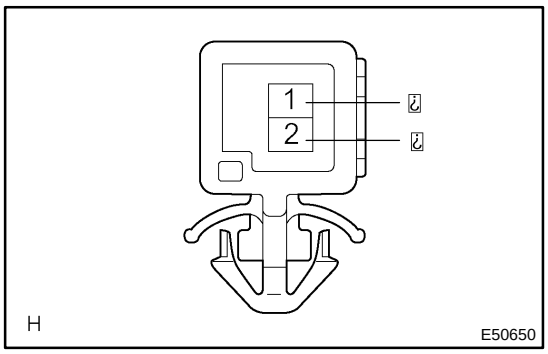

6. COOLER THERMISTOR NO.1

(a) Check resistance between terminals 1 and 2 of Cooler thermistor No. 1 at each temperature, as shown in the chart.

Resistance:

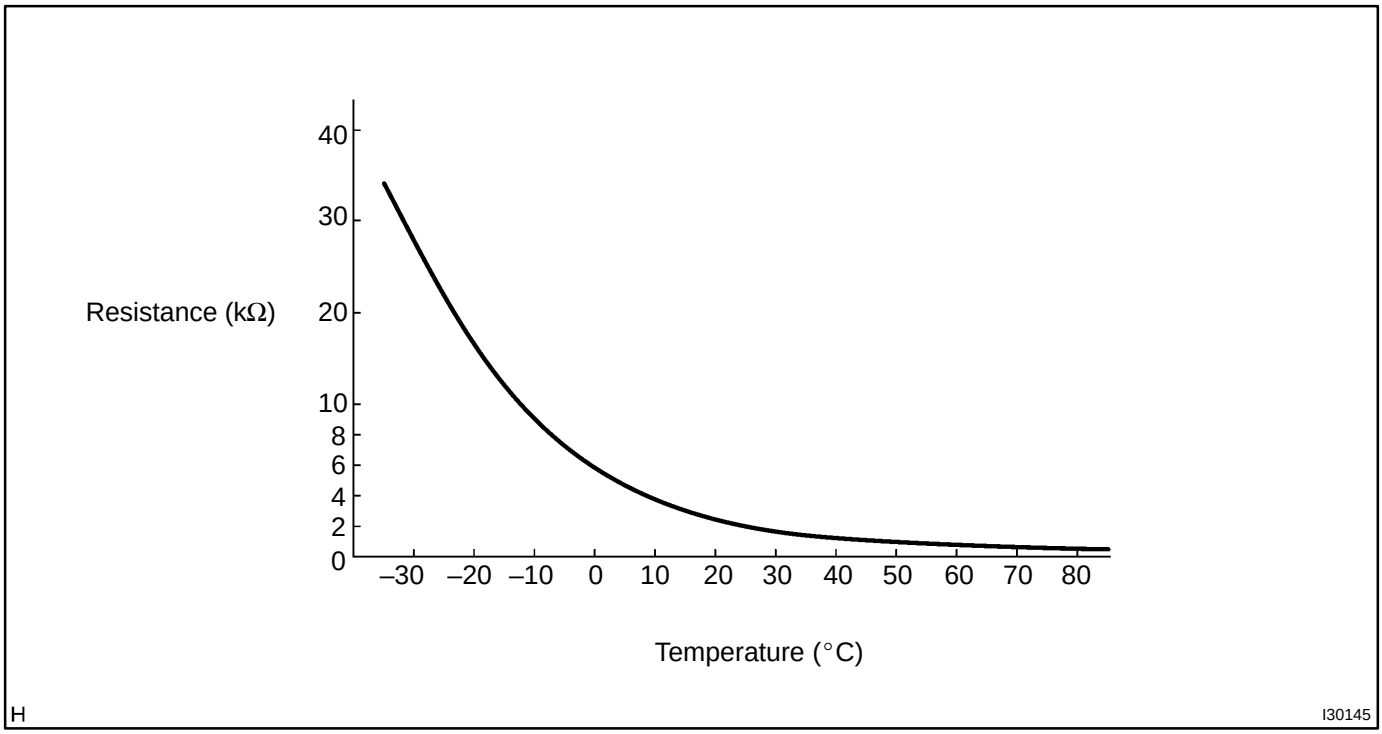

If resistance value is not as specified, replace the sensor.

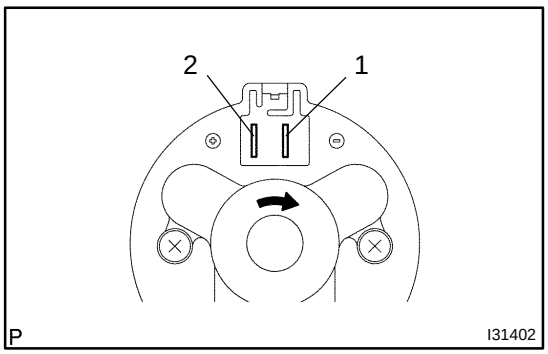

7. BLOWER W/FAN MOTOR SUB–ASSY

(a) Connect the positive (+) lead from the battery to terminal 2 and negative (–) to terminal 1, then check that the motor operation smoothly.

If operation is not as specified, replace the blower motor.

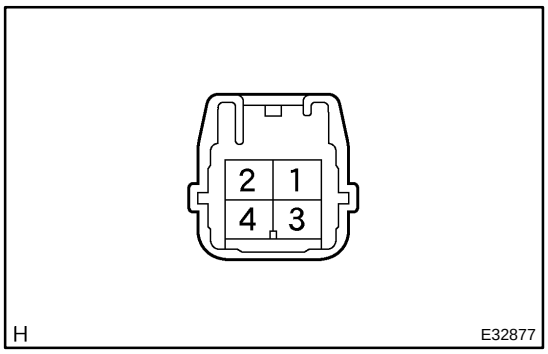

8. BLOWER RESISTOR

(a) Measure resistance between terminals, as shown in the chart below.

Tester connection	Specified condition
1 – 2	1.398 – 1.605 Ω
1 – 3	0.465 – 0.535 Ω
1 – 4	3.069 – 3.531 Ω

If resistance is not as specified, replace the blower resistor.

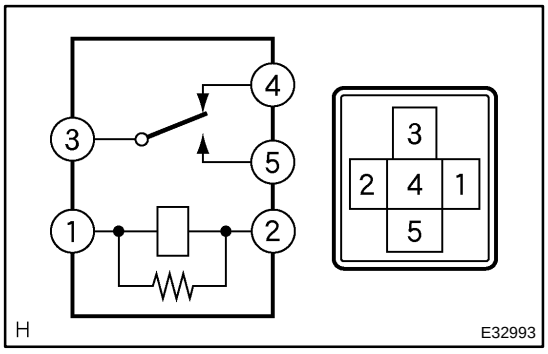

9. HEATER BLOWER MOTOR RELAY ASSY

Condition	Tester connection	Specified condition
Constant	1 – 2 3 – 4	Continuity
Apply B + between terminals 1 and 2.	3 – 5	Continuity

If continuity is not as specified, replace the heater blower motor relay.

REFRIGERANT

ON–VEHICLE INSPECTION

550BS–01

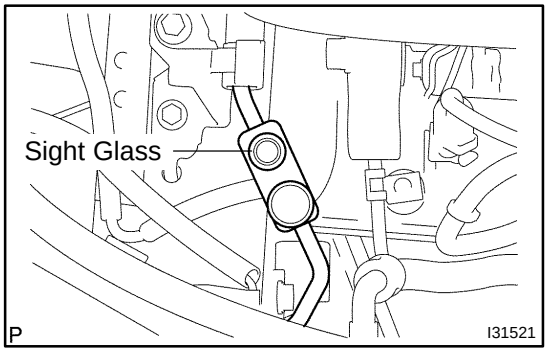

1. INSPECT REFRIGERANT VOLUME

(a) Observe the sight glass on the cooler refrigerant liquid pipe A.

Test conditions:

- Running engine at 1,500 rpm
- Blower speed control switch at ”HI”
- A/C switch ON
- Temperature control dial at ”MAX. COOL”
- Fully open the doors

Item	Symptom	Amount of refrigerant	Corrective Actions
1	Bubbles present	Insufficient*	(1) Check for gas leakage and repair if necessary (2) Add refrigerant until bubbles disappear
2	No bubbles present	None, insufficient or too much	Refer 3 and 4
3	No temperature difference between compressor inlet and outlet	Empty or nearly empty	(1) Check for gas leakage with gas leak detector and repair if necessary (2) Add refrigerant until bubbles disappear
4	Considerable temperature difference between compressor inlet and outlet.	Correct or too much	Refer to 5 and 6
5	Immediately after air conditioning is turned off, refrigerant clear	Too much	(1) Discharge refrigerant (2) Remove air and supply proper amount or purified refrigerant
6	Immediately after air conditioning is turned off, refrigerant foams and then becomes clear	Correct	–

*: Bubbles in the sight glass with ambient temperatures higher than usual can be considered normal if cooling is sufficient.

2. INSPECT REFRIGERANT PRESSURE WITH MANIFOLD GAUGE SET

(a) This is a method in witch the trouble is located by using a manifold gauge set. Read the manifold gauge pressure when the these conditions are established.

Test conditions:

- Temperature at the air inlet with the switch set at RECIRC is 30 – 35 °C (86 – 95 °F)
- Engine running at 1,500 rpm
- Blower speed control switch at "HI" position
- Temperature control dial at "COOL" position
- A/C switch ON
- Fully open doors

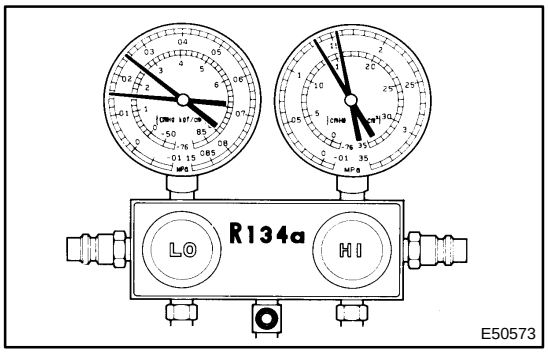

E50573

(1) Normally functioning refrigeration system.

Gauge reading:
Low pressure side:
0.15 – 0.25 MPa (1.5 – 2.5 kgf/cm^2)
High pressure side:
1.37 – 1.57 MPa (14 – 16 kgf/cm$^{2)}$

(2) Moisture present in refrigeration system.

Condition : Periodically cools and then fails to cool

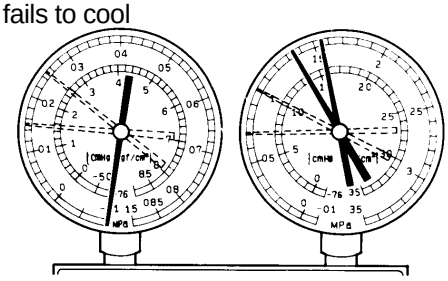
I22117

Symptom	Probable cause	Diagnosis	Remedy
During operation, pressure on low pressure side sometimes become a vacuum and sometime normal	Moisture in refrigerating system freezes at expansion valve orifice causing a temporary stop of cycle, however, when it melts, normal state is restored.	• Drier in oversaturected state • Moisture in refrigerating system freezes at expansion valve orifice and blocks circulation of refrigerant	(1) Replace condenser (2) Remove moisture in cycle by repeatedly evacuating air (3) Supply proper amount of new refrigerant

(3) Insufficient cooling

Condition: Cooling system does not function eftectively.

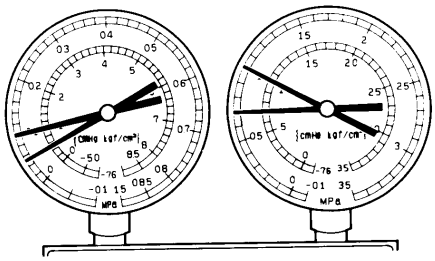

I22118

Symptom	Probable cause	Diagnosis	Corrective Actions
• Pressure low on both low and high pressure sides • Bubbles seen thought sight glass continuously • Insufficient cooling performance	Gas leakage in refrigeration system	• Insufficient refrigerant • Refrigerant leaking	(1) Check for gas leakage and repair if necessary (2) Supply proper amount of new refrigerant (3) If indicated pressure value is close to a 0 when connected to gauge, create the vacuum after inspecting and repairing location of leak

(4) Poor circulation of refrigerant

Condition: Cooling system close not function effectively.

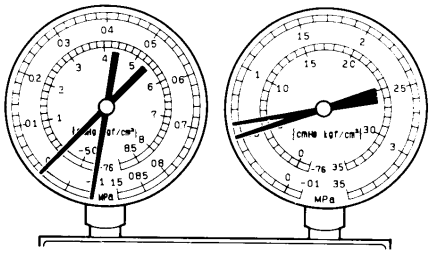

I22119

Symptom	Probable cause	Diagnosis	Corrective Action
• Pressure low on both low and high pressure sides • Frost on pipe from condenser to unit	Refrigerant flow obstructed by dirt in receiver	Receiver clogged	Replace condenser

(5) Refrigerant does not circulate

Condition: Cooling system does not function. (Sometimes it way function)

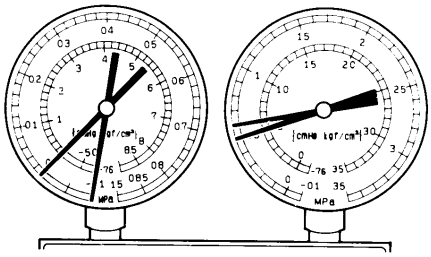

I22120

Symptom	Probable cause	Diagnosis	Corrective Actions
• Vacuum indicated on low pressure side, very low pressure indicated on high pressure side • Frost or dew seen on piping before and after receiver/ drier or expansion valve	• Refrigerant flow obstructed by moisture or dirt in refrigerating system • Refrigerant flow obstructed by gas leaked from expansion valve	Refrigerant does not circulate	(1) Check expansion valve (2) Clean out dirt in expansion valve by air blowing (3) Replace condenser (4) Evaporate air and supply proper amount of new refrigerant. (5) For gas leakage from expansion valve, replace expansion valve

(6) Refrigerant overcharged or insufficient cooling of condenser

Condition: Cooling system does not function dftectively.

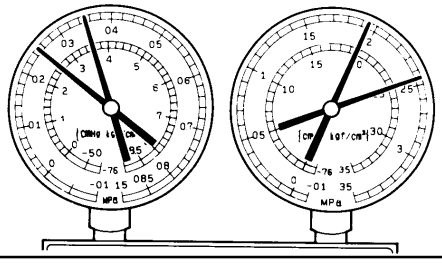

I22121

Symptom	Probable cause	Diagnosis	Remedy
• Pressure too high on both low and high pressure sides • No sir bubbles seen through the sight glass even when the engine rpm is lowered	• Unable to develop sufficient performance due to excessive use of refrigerating system • Insufficient cooling of condenser	• Excessive refrigerant in cycle→too much refrigerant supplied • Condenser cooling insufficient→condenser fins clogged at cooling fan	(1) Clean condenser (2) Check cooling fan with cooling fan motor operation (3) If (1) and (2) are in normal state, check amount of refrigerant and supply proper amount of refrigerant

(7) Air present in refrigeration system

Condition: Cooling system does not function.

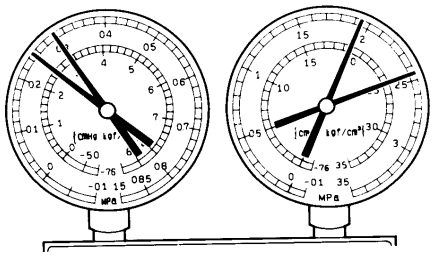

NOTE : These gauge indications are shown when the refrigerating system has been opens and the refrigerant charged without vacuum purging.

I22122

Symptom	Probable cause	Diagnosis	Corrective Actions
• Pressure too high on both low and high pressure sides • The low pressure piping too hot to the touch • Bubbles seen through sight glass	Air entered in refrigerating system	• Air present in refrigerating system • Insufficient vacuum purging	(1) Check compressor oil to see if it is see if it is dirty or insufficient (2) Evacuate air and supply new refrigerant

(8) Expansion valve improperly

Condition: Refrigerant functions insufficient.

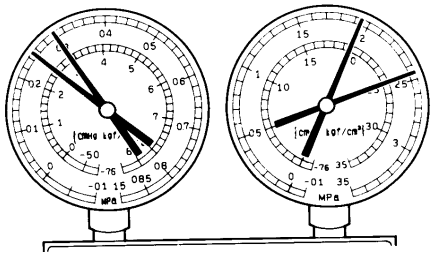

I22123

Symptom	Probable cause	Diagnosis	Corrective Actions
• Pressure too high on both low and high pressure sides • Frost or large amount of dew on piping on low pressure side	Trouble in expansion valve	• Excessive refrigerant in low pressure piping • Expansion valve opened too wide	Check expansion valve

(9) Defective compression compressor

Condition : Refrigerant is not effective.

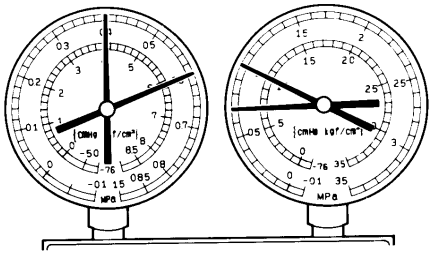

I22124

Symptom	Probable cause	Diagnosis	Corrective Actions
• Pressure too high on low high pressure sides • Pressure too low to on high pressure side	Internal leak in compressor	• Compression failure • Leakage from valve damaged or broken sliding parts	Repair or replace compressor

Gauge readings (Reference)

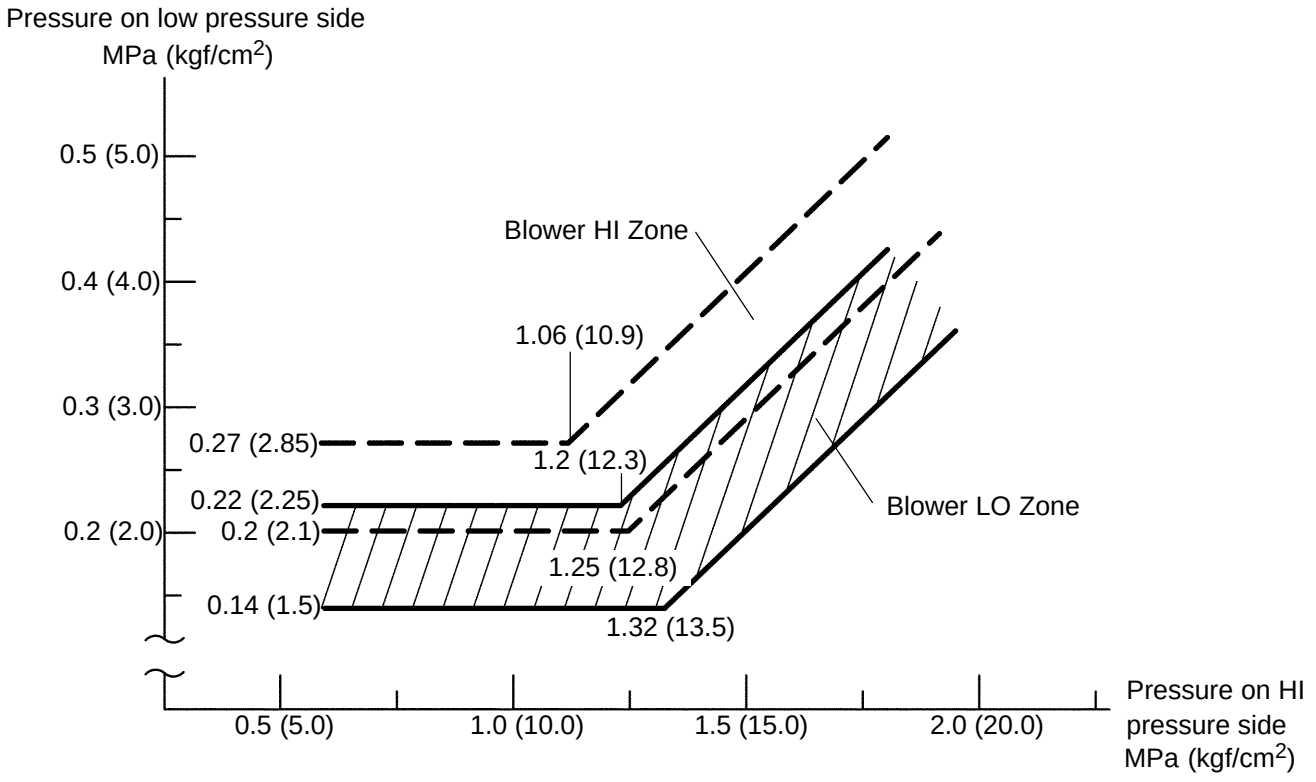

I30081

550BT–01

REPLACEMENT

1. DISCHARGE REFRIGERANT FROM REFRIGERATION SYSTEM

(a) Turn the A/C switch ON.

(b) Operating the cooler compressor at the engine rpm of approx. 1,000 for 5 to 6 min., circulate the refrigerant and collect compressor oil remaining in each component into the cooler compressor as much as possible.

(c) Stop the engine.

(d) Let the refrigerant gas out.

SST 07110–58060 (07117–58080, 07117–58090, 07117–78050, 07117–88060, 07117–88070, 07117–88080)

2. CHARGE REFRIGERANT

(a) Using a vacuum pump, perform a vacuum purping.

(b) Charge refrigerant, HFC–134a (R134a).

Standard: 550 ± 50 g (19.37 ± 1. 76 oz.)

SST 07110–58060 (07117–58060, 07117–58070, 07117–58080, 07117–58090, 07117–78050, 07117–88060, 07117–88070, 07117–88080)

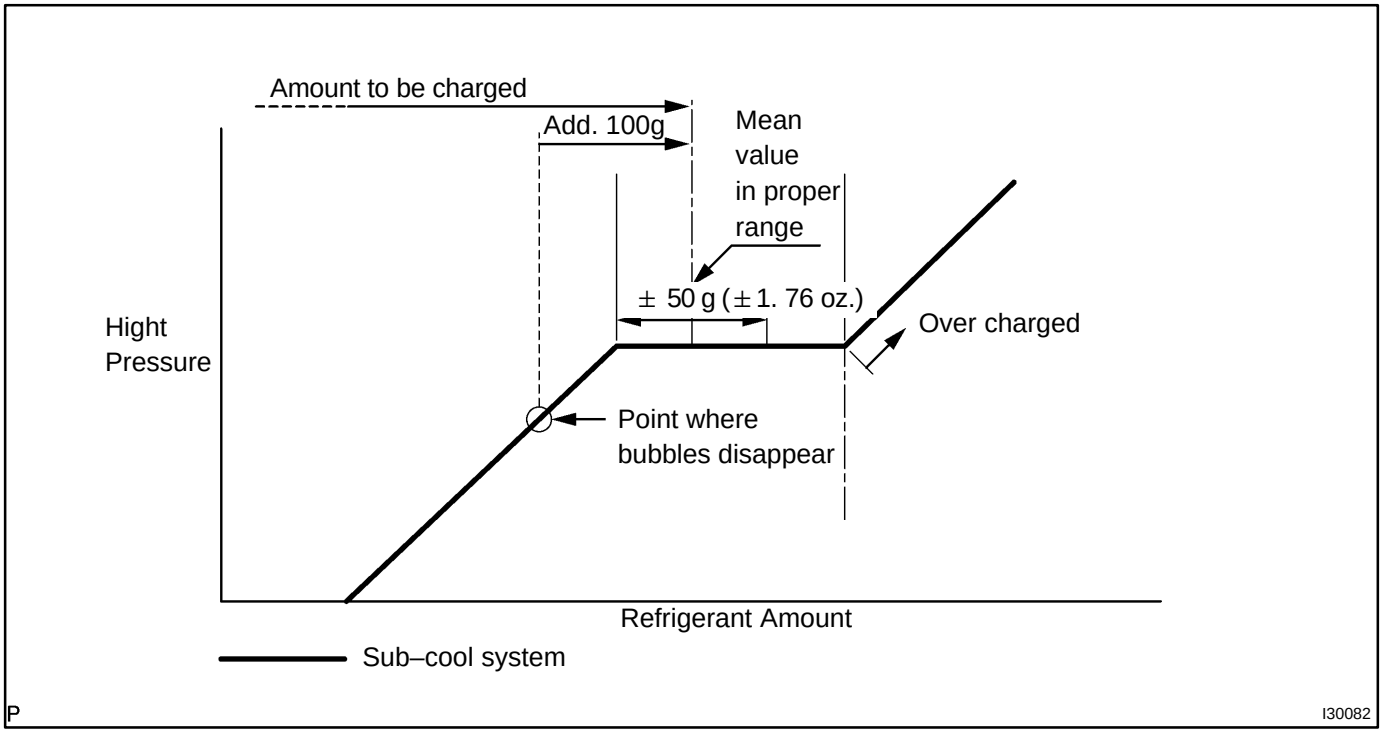

3. WARM UP ENGINE

4. INSPECT LEAKAGE OF REFRIGERANT

REFRIGERANT LINE

COMPONENTS

550BX–01

1MZ–FE:

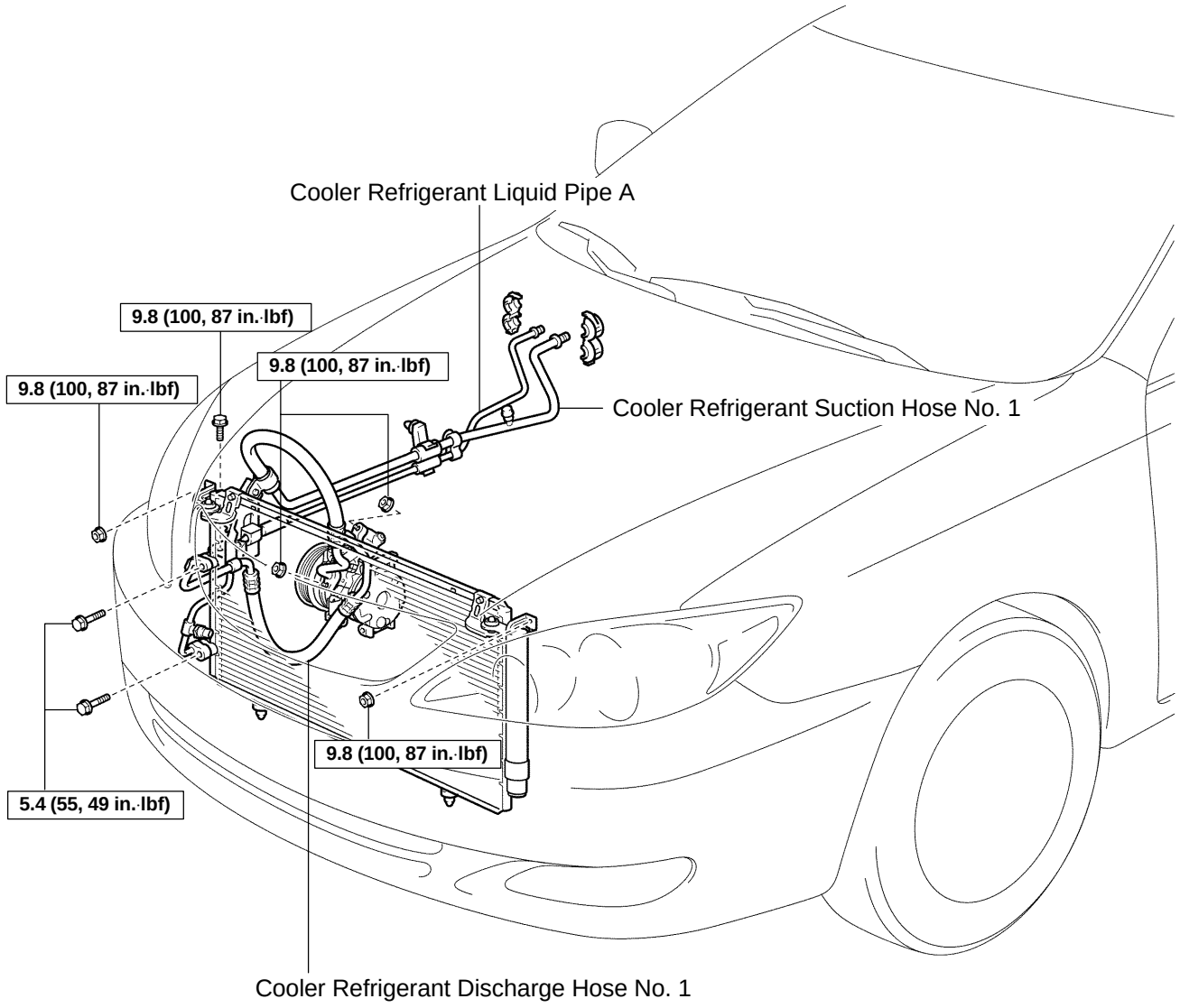

N·m (kgf·cm, ft·lbf) : Specified torque

P

I31330

2AZ–FE:

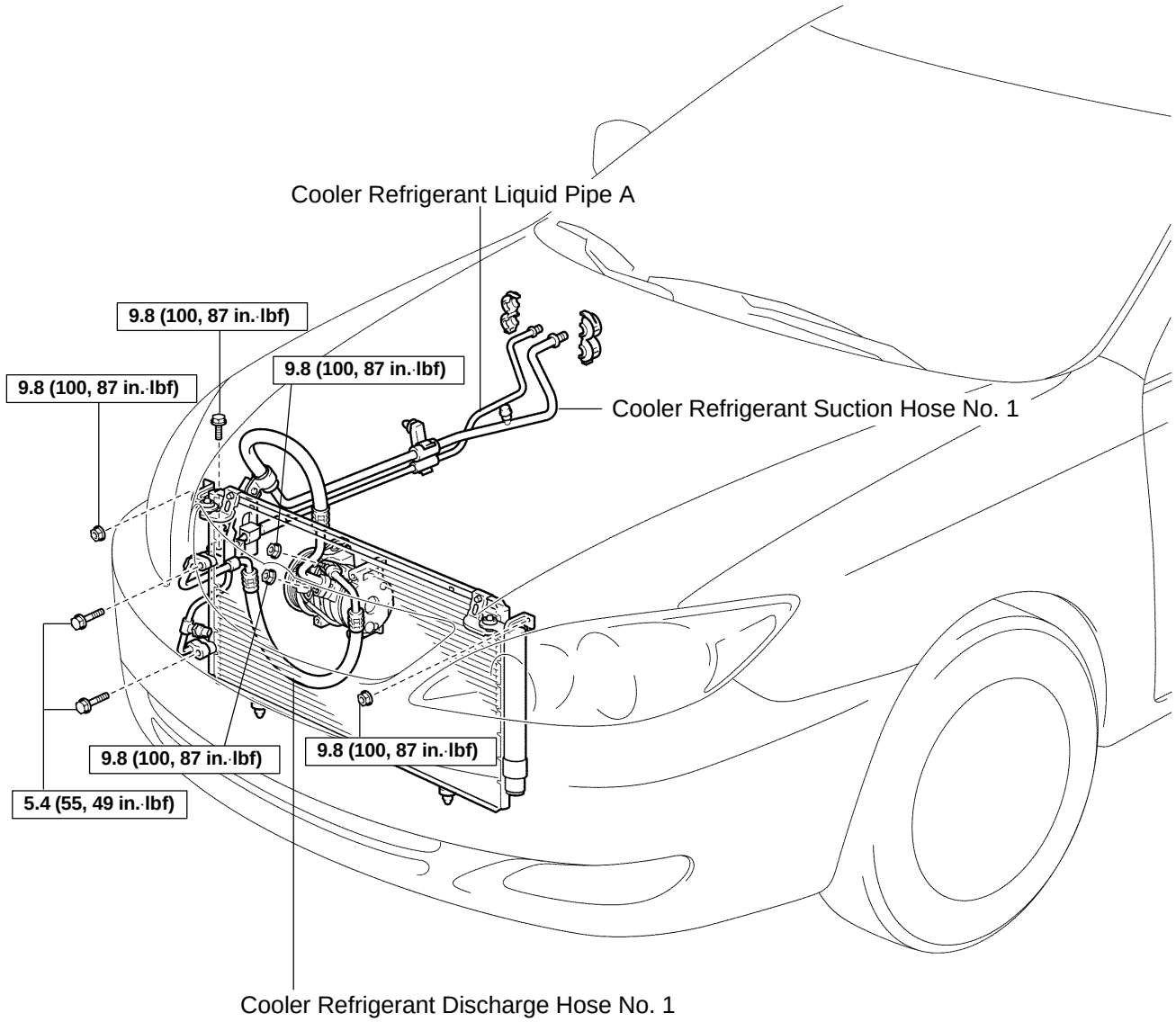

N·m (kgf·cm, ft·lbf) : Specified torque

P

I31331

V (COOLER COMPRESSOR TO CRANKSHAFT PULLEY) BELT NO.1

550BU–01

REPLACEMENT

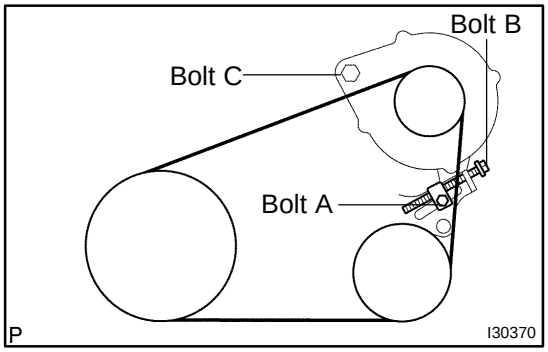

1. REMOVE V (COOLER COMPRESSOR TO CRANKSHAFT PULLEY) BELT NO.1

(a) Loosen the bolt C.
(b) Loosen the bolt A.
(c) Loosen the bolt B and remove the cooler V belt No. 1.

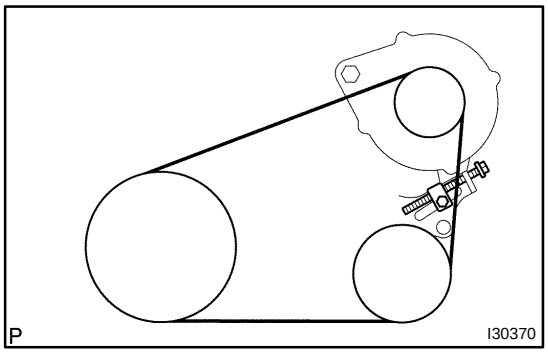

2. INSTALL V (COOLER COMPRESSOR TO CRANKSHAFT PULLEY) BELT NO.1

(a) Temporarily install the cooler V belt No. 1 as illustrated.

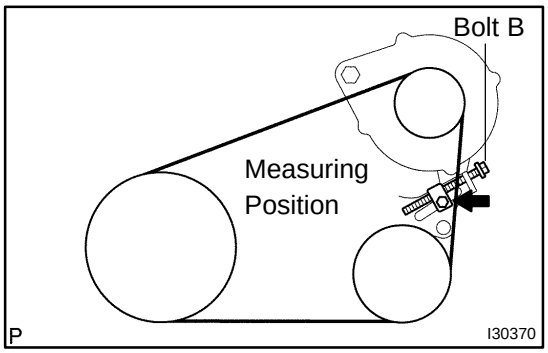

3. ADJUST V (COOLER COMPRESSOR TO CRANKSHAFT PULLEY) BELT NO.1

(a) Apply drive belt tension by turning the bolt B.
Drive belt tension:
New Belt: 165 ± 27 lbf
Used belt: 88 ± 22 lbf

HINT:

- ”New belt” refers to a belt which has been used less than 5 minutes on a running engine.
- ”Used belt” refers to a belt which has been used on a running engine for 5 minutes or more.
- After installing the drive belt, check that it fits properly in the ribbed grooves.

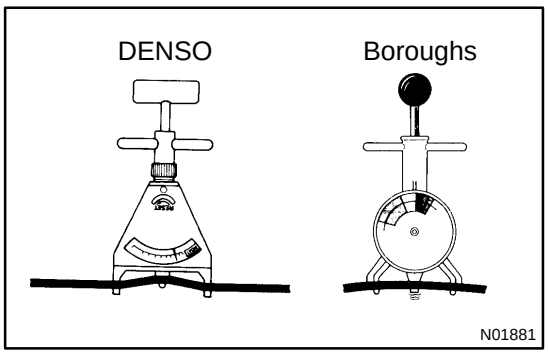

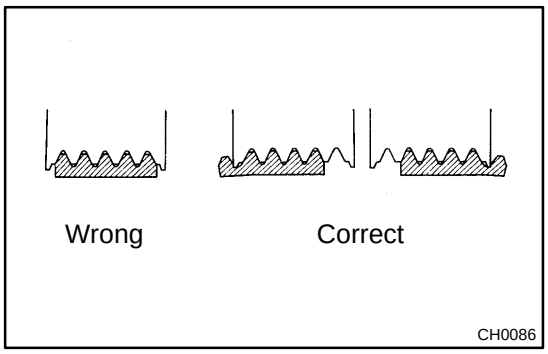

- Check that the drive belt fits properly in the ribbed grooves.

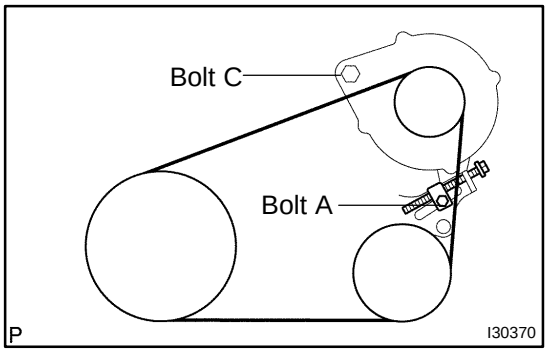

4. FULLY TIGHTEN V (COOLER COMPRESSOR TO CRANKSHAFT PULLEY) BELT NO.1

(a) Tighten the bolt A.
Torque: 17.5 N·m (178 kgf·cm, 12 ft·lbf)

(b) Tighten the bolt C.
Torque: 58 N·m (591 kgf·cm, 43 ft·lbf)

AIR CONDITIONER CONTROL ASSEMBLY

550BV–01

COMPONENTS

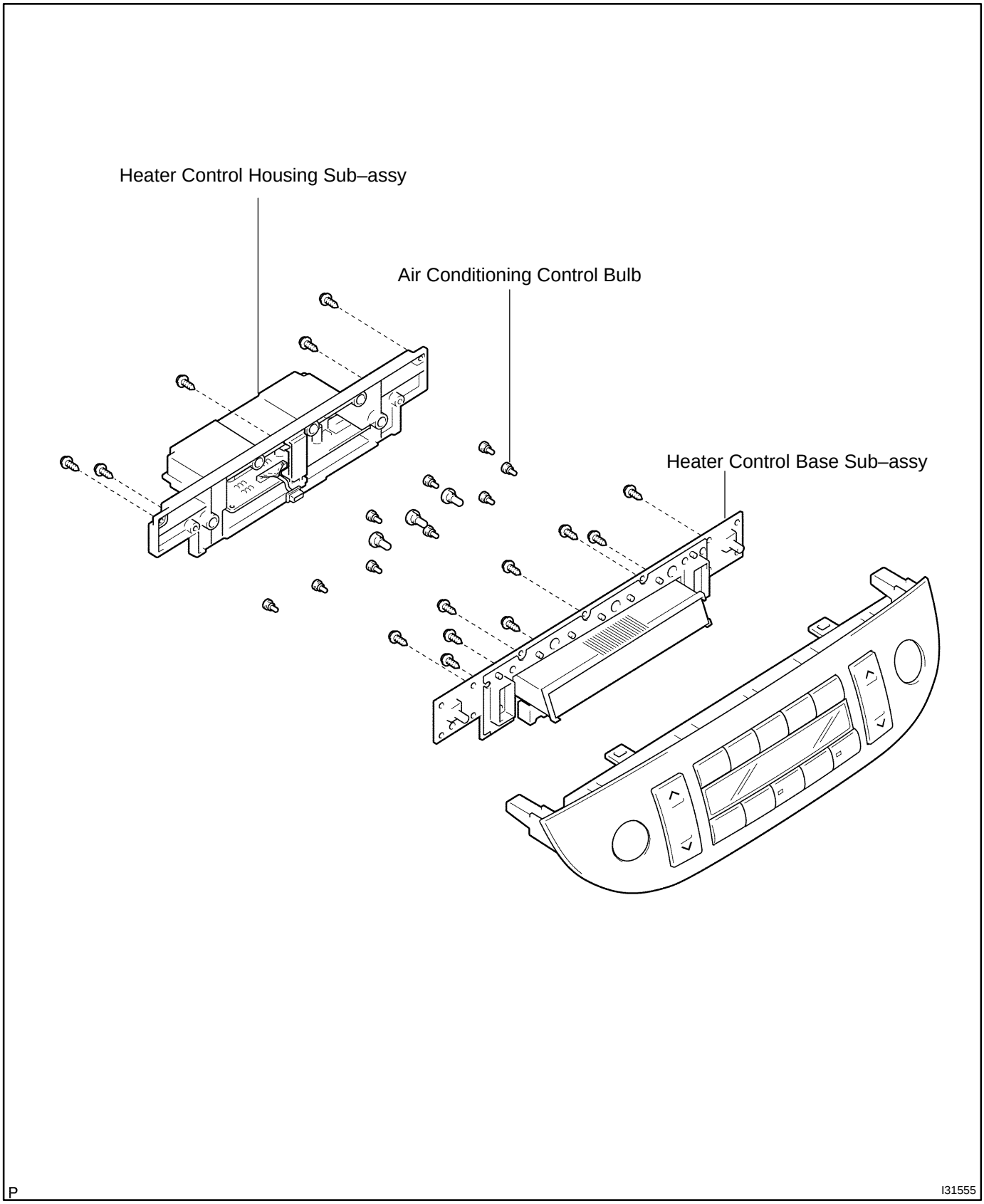

550BW–01

OVERHAUL

HINT:

COMPONENTS: See page 55–23

1. REMOVE AIR CONDITIONER CONTROL ASSEMBLY (See page 71–12)

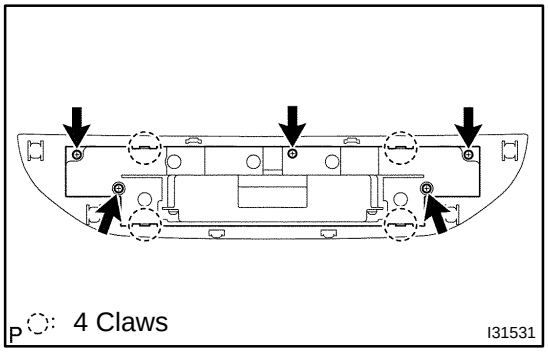

2. REMOVE HEATER CONTROL HOUSING SUB–ASSY

(a) Release the 4 fitting claws, remove the 5 screws.

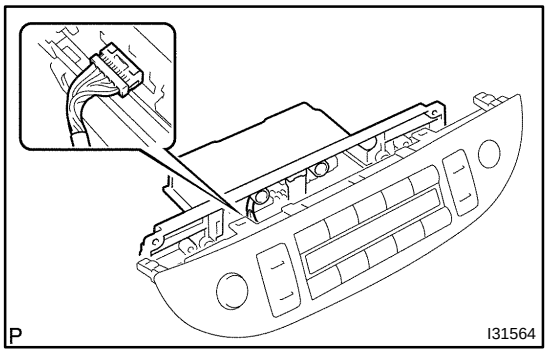

(b) Disconnect the connector, remove the heater control housing sub–assy.

3. REMOVE AIR CONDITIONING CONTROL BULB

(a) Remove the air conditioning control bulb from the heater control base sub–assy.

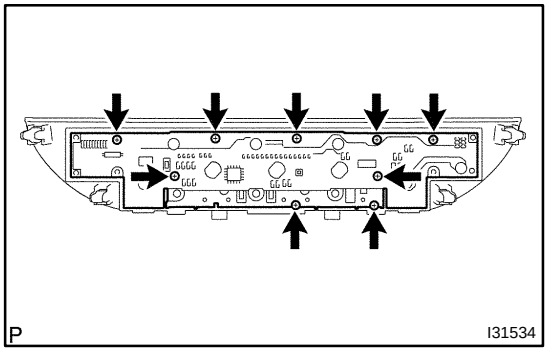

4. REMOVE HEATER CONTROL BASE SUB–ASSY

(a) Remove the 9 screws and heater control base sub–assy.

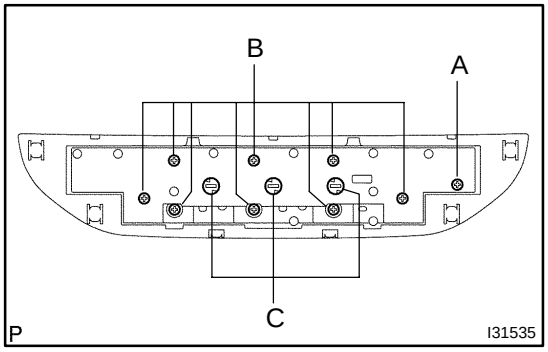

5. INSTALL AIR CONDITIONING CONTROL BULB

(a) Install the air conditioning control bulb to the heater control base sub–assy.

Bulb position:

Position	Part No.
A	90010 – 03054
B	90010 – 03055
C	90010 – 03056

AIR CONDITIONING PANEL SUB–ASSY

550BY–01

COMPONENTS

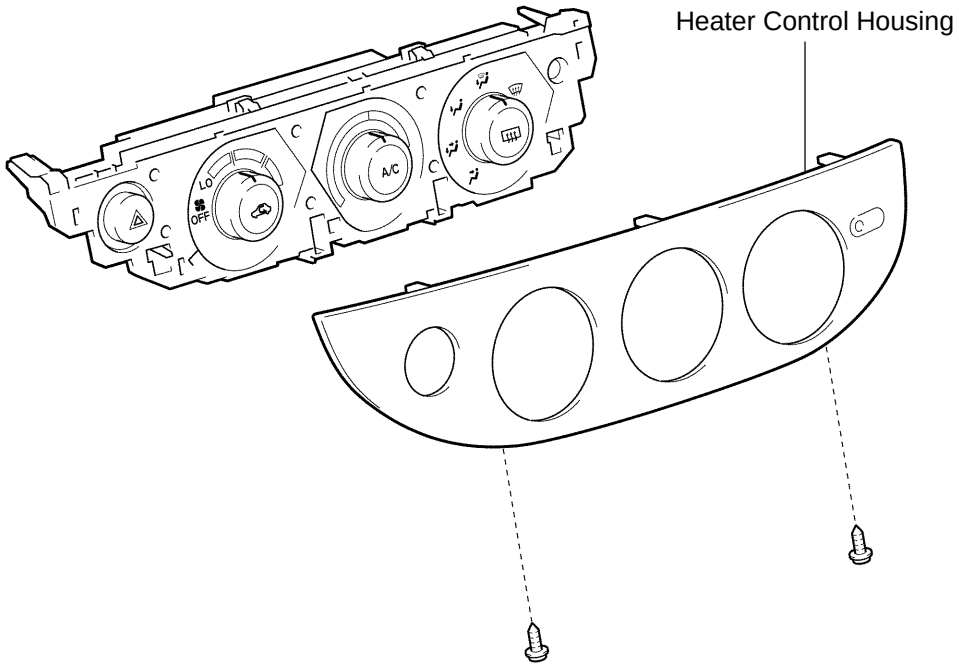

P

I31579

550BZ–01

OVERHAUL

HINT:

COMPONENTS: See page 55–25

1. REMOVE AIR CONDITIONING PANEL SUB–ASSY
(See page 71–12)

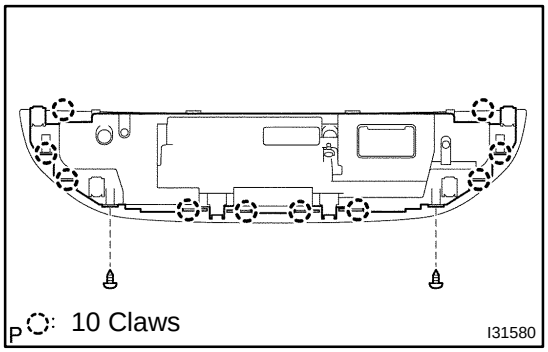

2. REMOVE HEATER CONTROL HOUSING

(a) Remove the 2 screws.
(b) Release the 10 fitting claws, remove the heater control housing.

AIR CONDITIONING RADIATOR ASSY

COMPONENTS

550C0–01

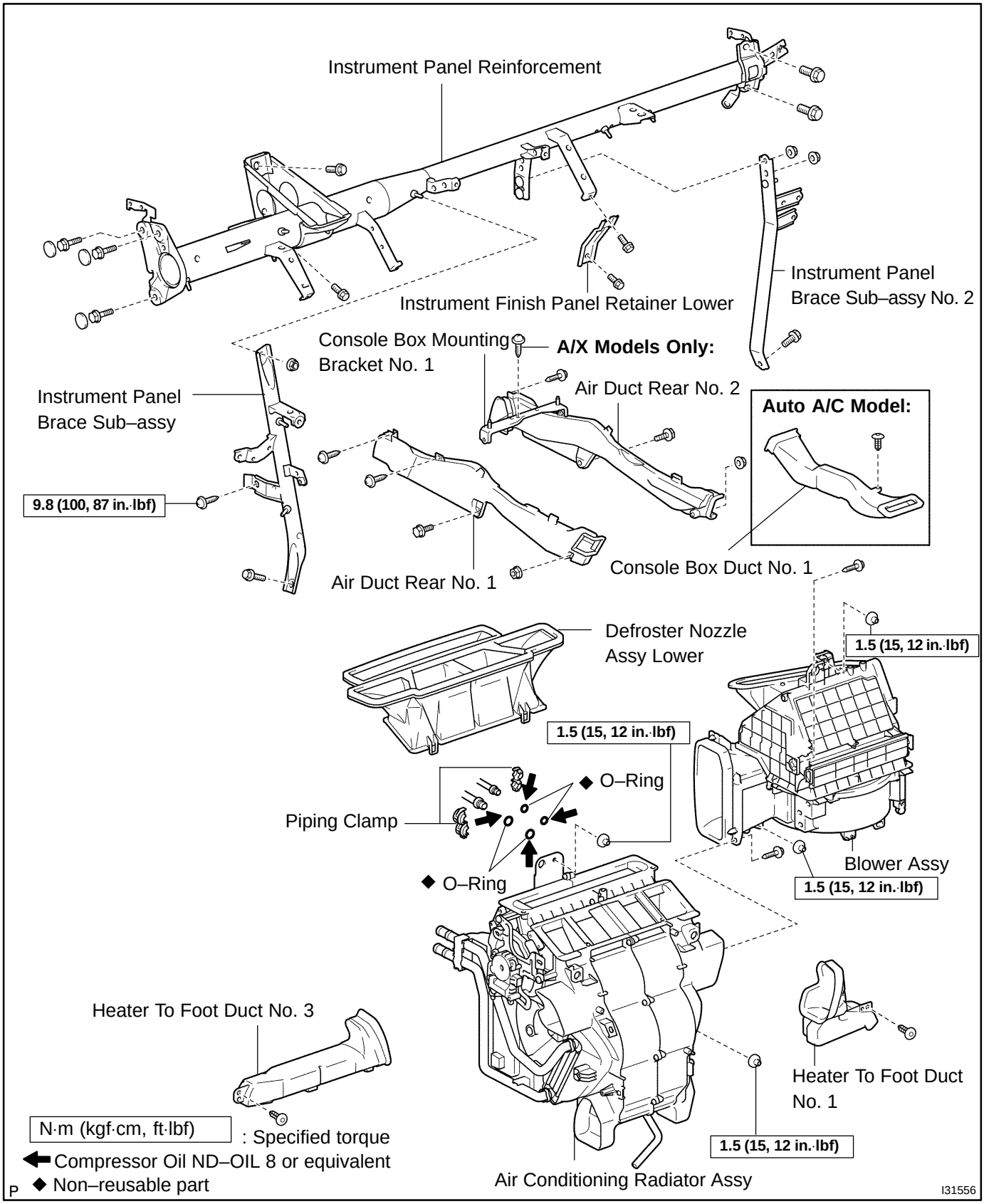

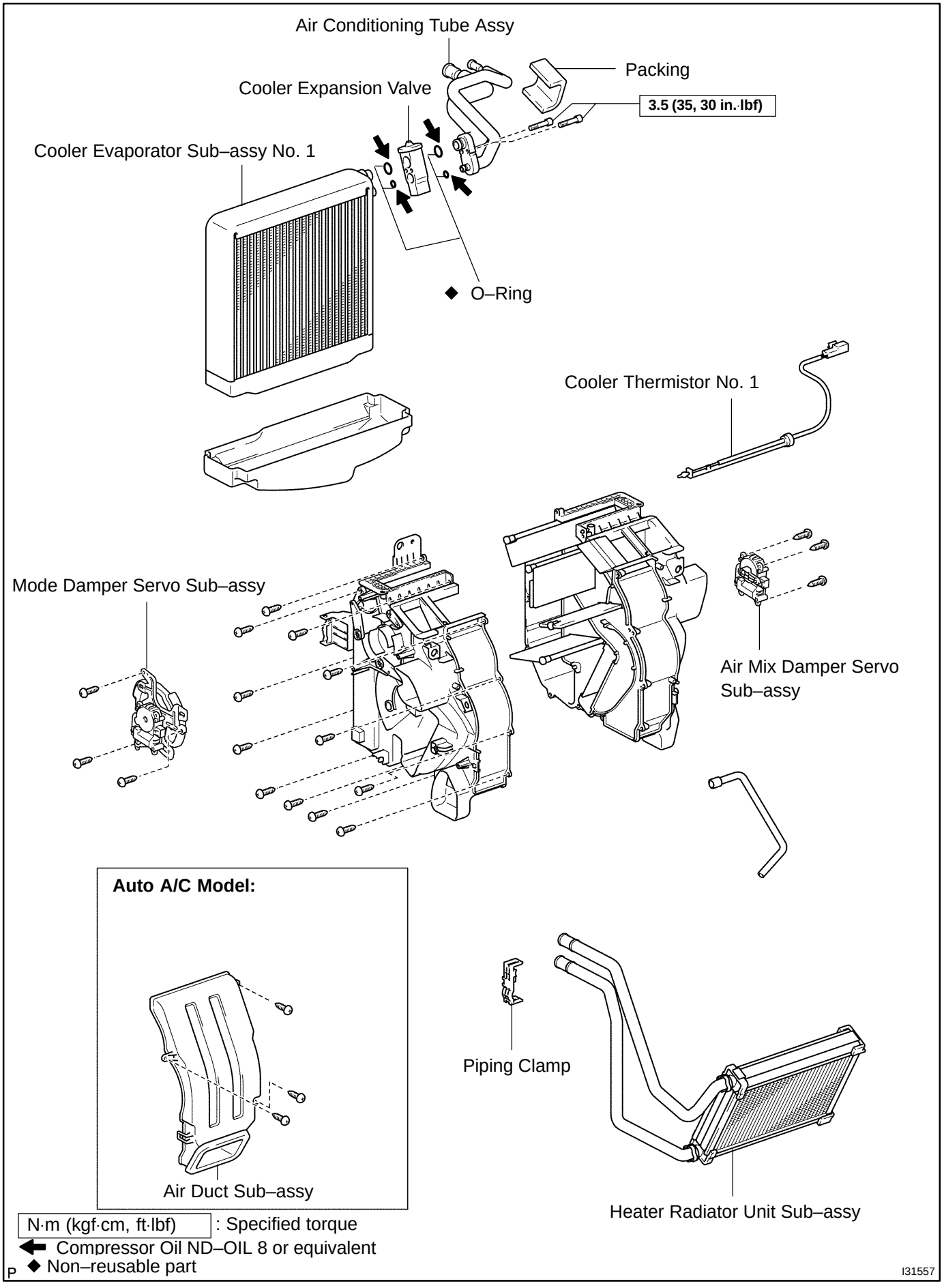
Air Conditioning Tube Assy
Packing
Cooler Expansion Valve
3.5 (35, 30 in.·lbf)
Cooler Evaporator Sub–assy No. 1
◆ O–Ring
Cooler Thermistor No. 1
Mode Damper Servo Sub–assy
Air Mix Damper Servo Sub–assy
Auto A/C Model:
Air Duct Sub–assy
Piping Clamp
Heater Radiator Unit Sub–assy
N·m (kgf·cm, ft·lbf) : Specified torque
Compressor Oil ND–OIL 8 or equivalent
◆ Non–reusable part
P
I31557

550C1–01

OVERHAUL

HINT:

COMPONENTS: See page 55–27

1. DISCHARGE REFRIGERANT FROM REFRIGERATION SYSTEM (See page 55–18)

SST 07110–58060 (07117–58080, 07117–58090, 07117–78050, 07117–88060, 07117–88070, 07117–88080)

2. DISCONNECT COOLER REFRIGERANT SUCTION HOSE NO.1

(a) Install SST to piping clamp.

SST 09870–00015

HINT:

Confirm the direction of the piping clamp claw and SST using the illustration showing on the caution label.

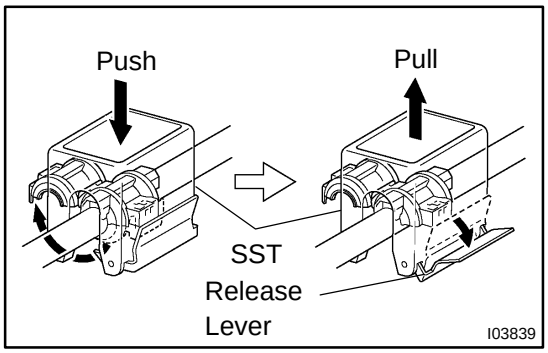

(b) Push down SST and release the clamp lock.

NOTICE:

Be careful not to deform the tube, when pushing SST.

(c) Pull SST slightly and push the release lever, then remove the piping clamp with SST.

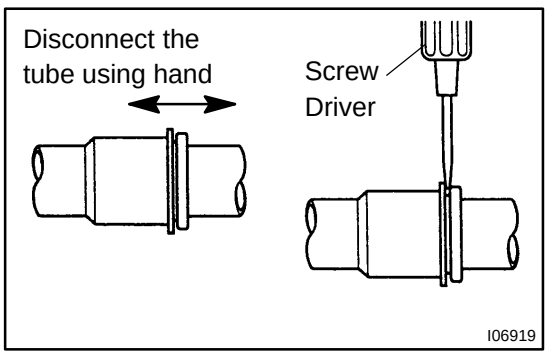

(d) Disconnect the cooler refrigerant suction hose No. 1.

NOTICE:

- **Do not use tools like screwdriver to remove the tube.**
- **Cap the open fittings immediately to keep moisture or dirt out of the system.**

3. DISCONNECT COOLER REFRIGERANT LIQUID PIPE A

SST 09870–00025

HINT:

Disconnect cooler refrigerant liquid pipe A in the same way as the cooler refrigerant suction hose No. 1.

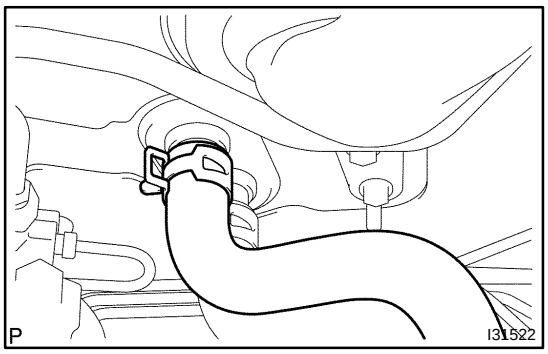

4. DISCONNECT HEATER OUTLET WATER HOSE

(a) Using pliers, grip the claws of clip and slide the clip and disconnect the heater outlet water hose.

5. DISCONNECT HEATER INLET WATER HOSE

HINT:
Disconnect in the same way as the heater outlet water hose.

6. REMOVE INSTRUMENT PANEL SAFETY PAD SUB–ASSY
(See page 71–12)

HINT:
Refer to the instructions for removal of the instrument panel safety pad sub–assy.

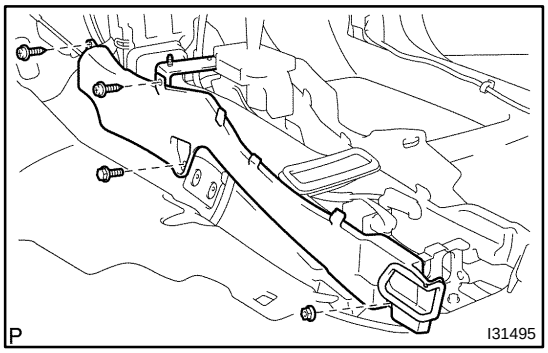

7. REMOVE AIR DUCT REAR NO.1

(a) Remove the 2 screws, bolt and nut.
(b) Remove the air duct rear No. 1.

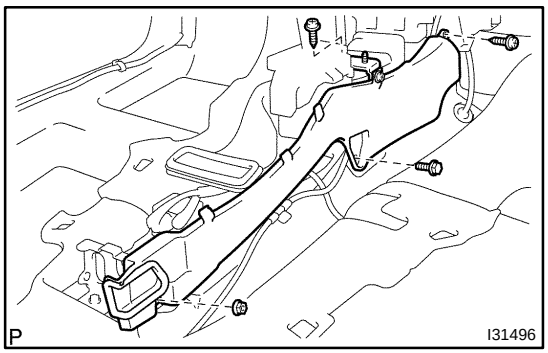

8. REMOVE AIR DUCT REAR NO.2

(a) Remove the bolt and nut.
(b) A/X models:
Remove the 2 screws, air duct rear No. 2 and console box mounting bracket No. 1.
(c) M/X models:
Remove the screw, air duct rear No. 2 and console box mounting bracket No. 1.

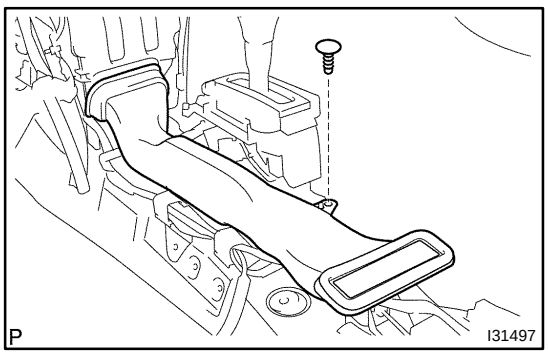

9. REMOVE CONSOLE BOX DUCT NO.1(AUTO AIR CONDITIONER)

(a) Remove the clip and console box duct No. 1.

10. DISCONNECT FLOOR SHIFT PARKING LOCK CABLE ASSY

11. REMOVE WINDSHIELD WIPER RELAY ASSY

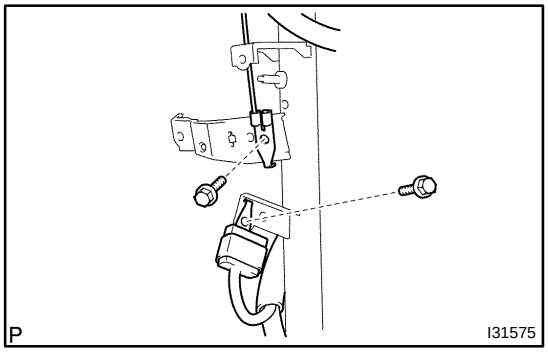

12. REMOVE INSTRUMENT PANEL BRACE SUB–ASSY NO.1

(a) Remove the 2 bolts and 2 earth wires.

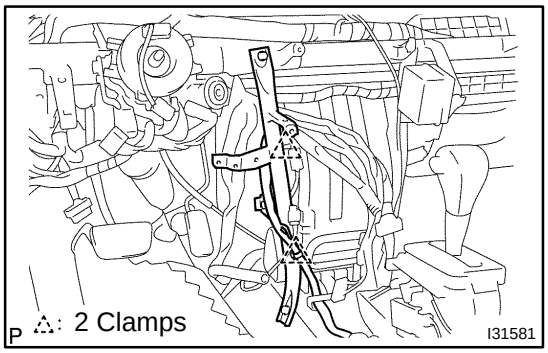

(b) Release the 2 clamps.

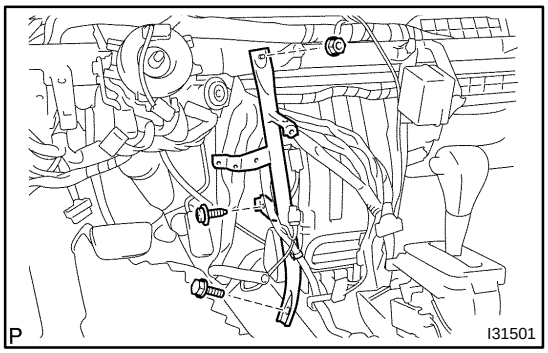

(c) Remove the bolt and screw.
(d) Remove the nut and instrument panel brace sub–assy No. 1.

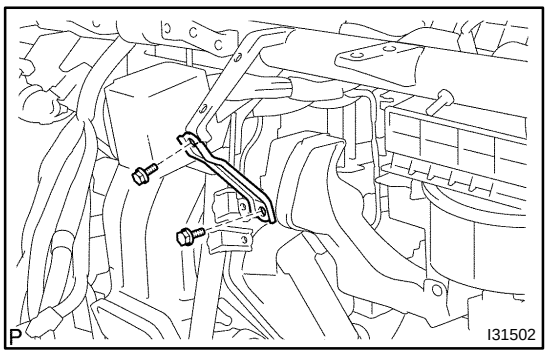

13. REMOVE INSTRUMENT FINISH PANEL RETAINER LOWER

(a) Remove the 2 bolts and instrument finish retainer lower.

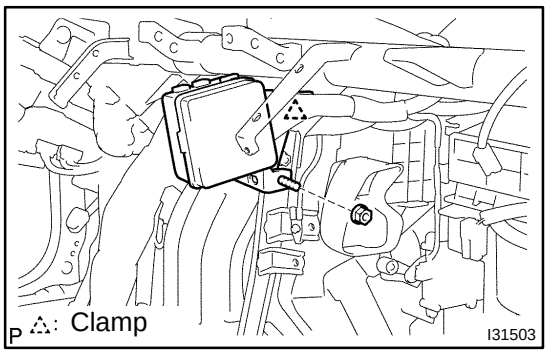

14. REMOVE INSTRUMENT PANEL BRACE SUB–ASSY NO.2

(a) Remove the clamp, nut and passenger side junction block.

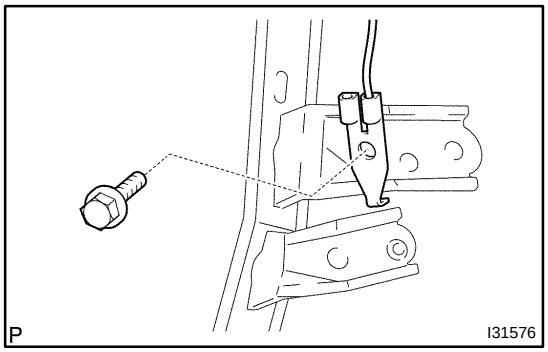

(b) Remove the bolt and earth wire.

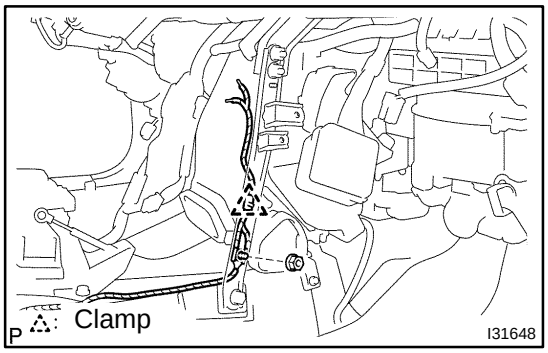

(c) Remove the nut and clamp.

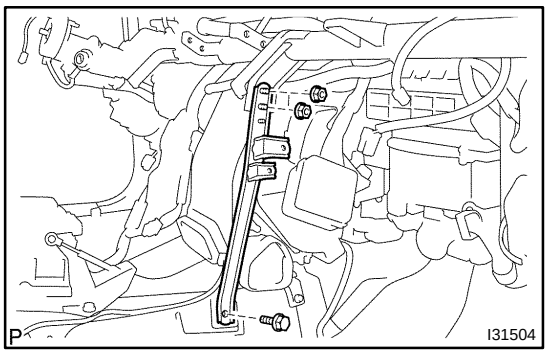

(d) Remove the 2 nuts, bolt and instrument panel brace sub–assy No. 2.

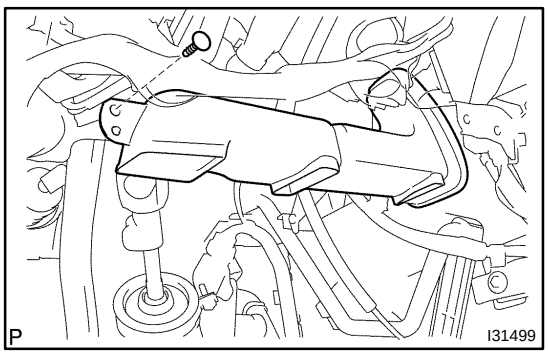

15. REMOVE HEATER TO FOOT DUCT NO.3

(a) Remove the clip and heater to foot duct No. 3.

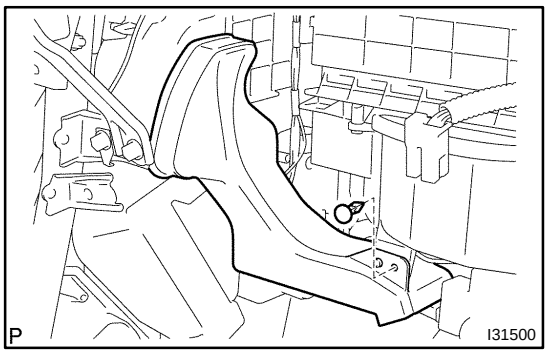

16. REMOVE HEATER TO FOOT DUCT NO.1

(a) Remove the clip and heater to foot duct No. 1.

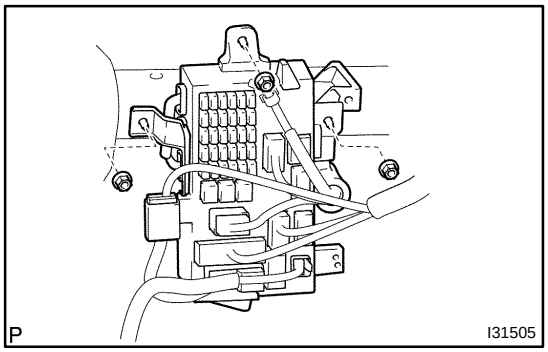

17. DISCONNECT STEERING COLUMN ASSY

(a) Remove the 3 nuts and driver side junction block.

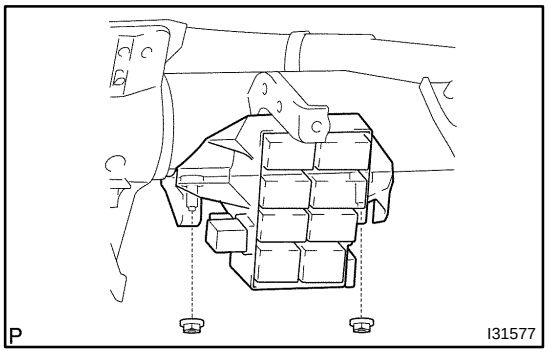

(b) Remove the 2 nuts and steering side connector block.

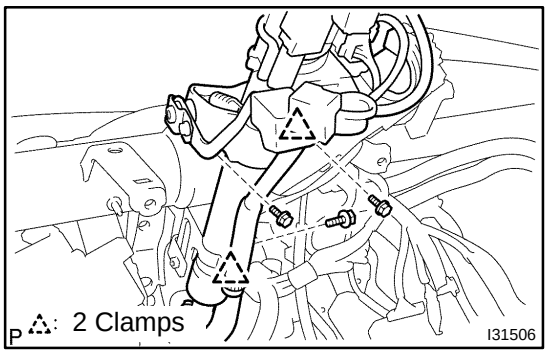

(c) Release the 2 clamps.

(d) Remove the 3 bolts, disconnect the steering column assy.

18. REMOVE INSTRUMENT PANEL REINFORCEMENT

(a) Disconnect the 7 clamps and the wire harness.

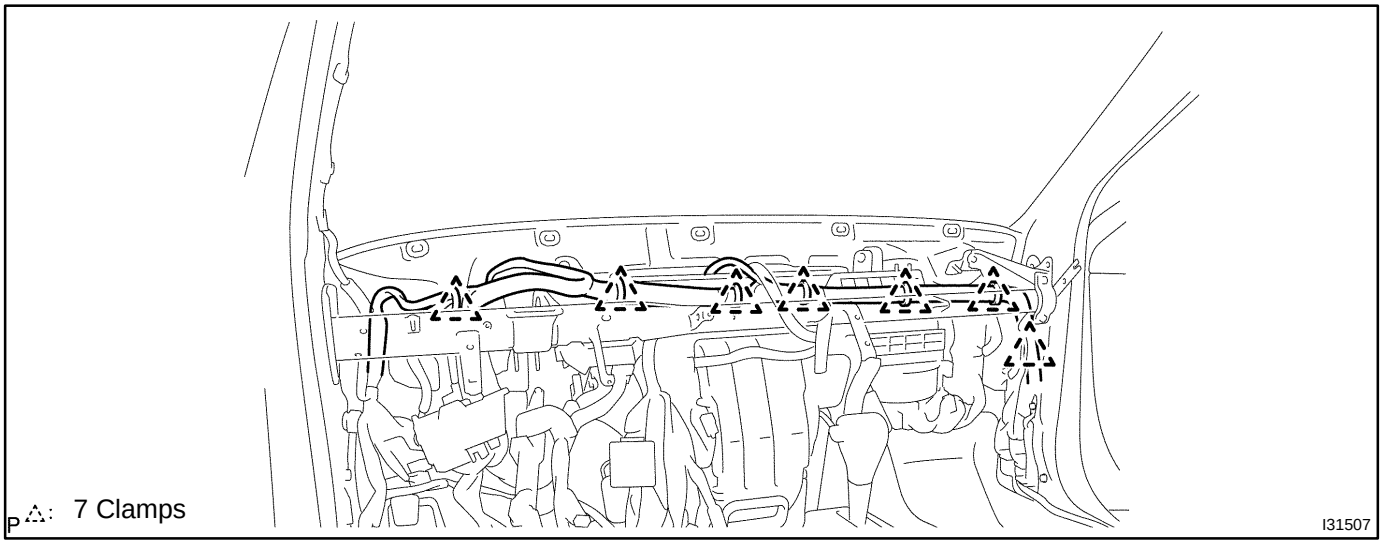

(b) Remove the 3 nuts, disconnect the 3 earth wires.

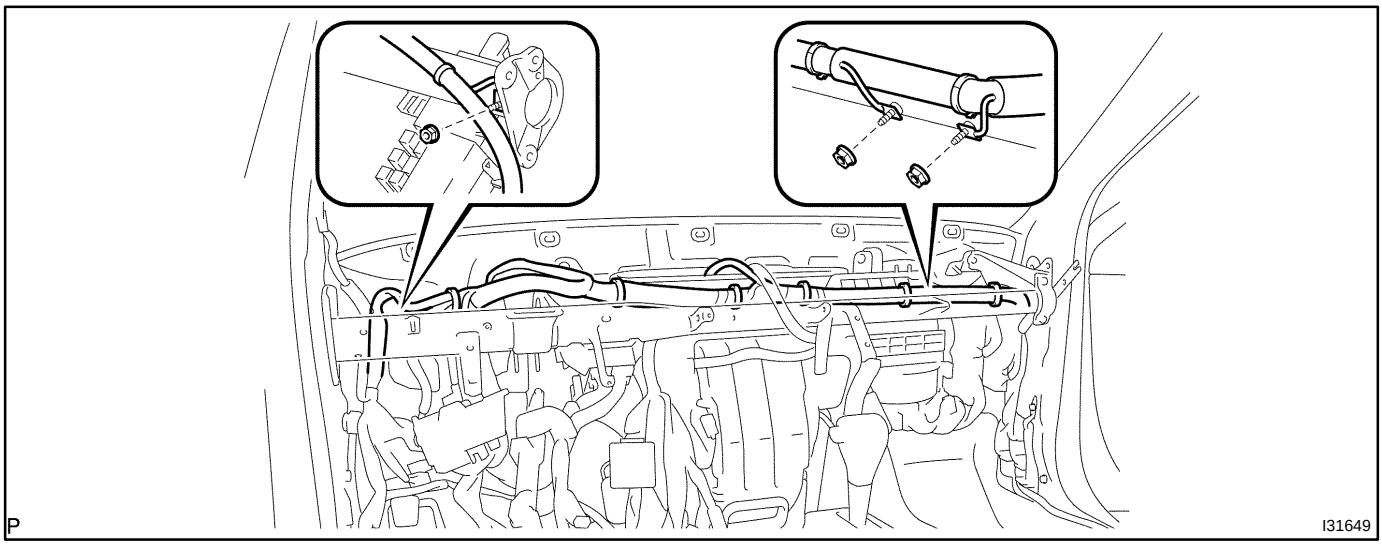

(c) Remove the 3 caps, 7 bolts and instrument panel reinforcement.

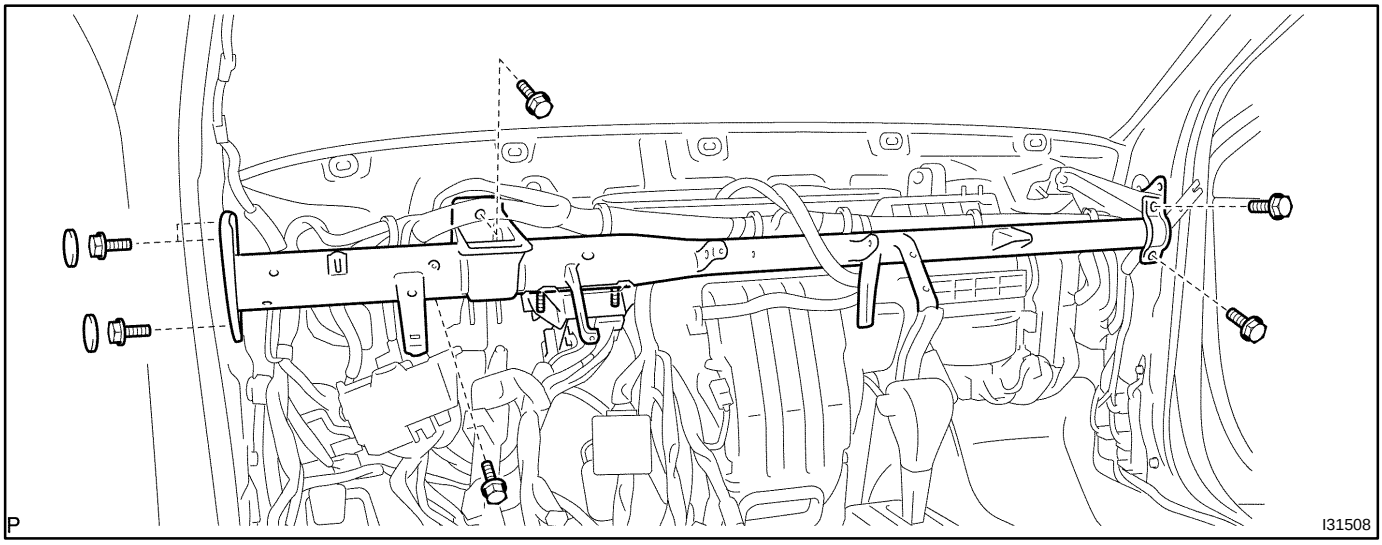

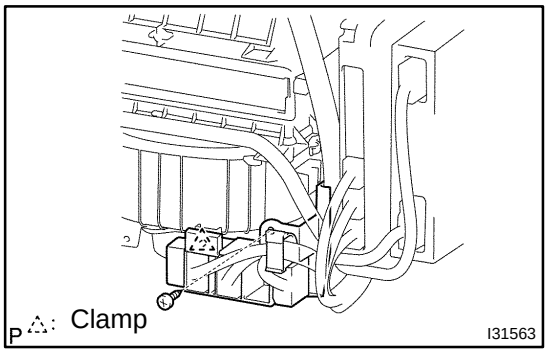

19. REMOVE BLOWER ASSY

(a) Disconnect the connectors.
(b) Remove the screw, clamp and blower connector holder.

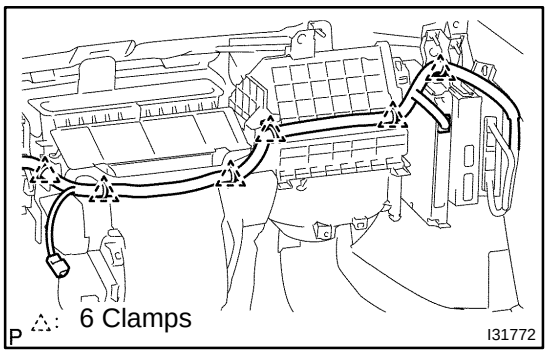

(c) Disconnect the 6 clamps and the wire harness.

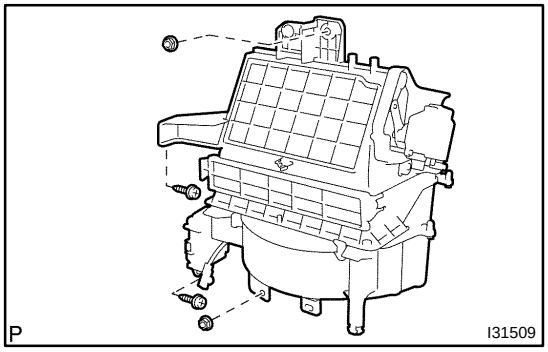

(d) Remove the 2 screws, 2 nuts and blower assy.

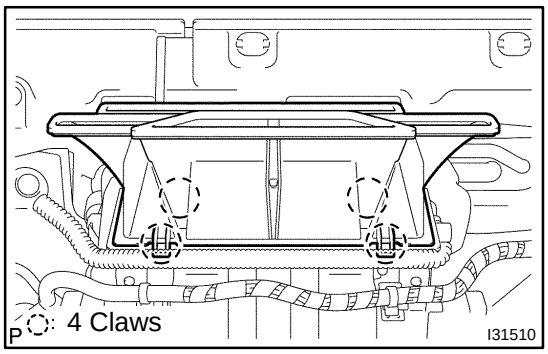

20. REMOVE DEFROSTER NOZZLE ASSY LOWER

(a) Release the 4 fitting claws, remove the defroster nozzle assy lower.

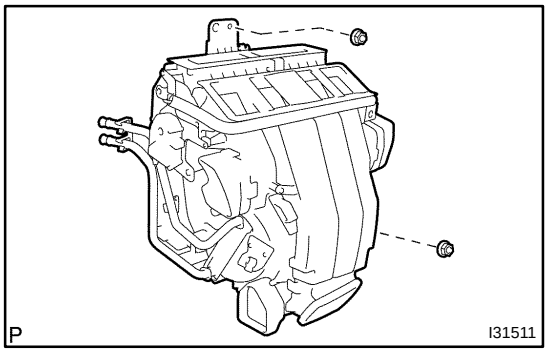

21. REMOVE AIR CONDITIONING RADIATOR ASSY

(a) Disconnect the connectors.
(b) Remove the 2 nuts and air conditioning radiator assy.

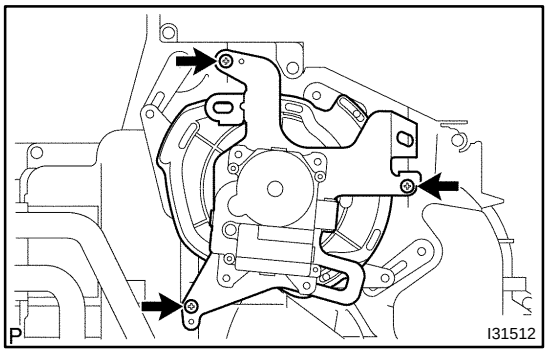

22. REMOVE MODE DAMPER SERVO SUB–ASSY

(a) Remove the 3 screws and mode damper servo sub–assy.

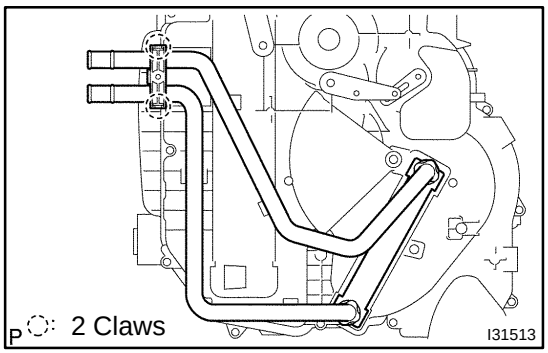

23. REMOVE HEATER RADIATOR UNIT SUB–ASSY

(a) Release the 2 fitting claws, remove the piping clamp.
(b) Remove the heater radiator unit sub–assy.

NOTICE:
Prepare a support plate and waste to catch the leaked coolant.

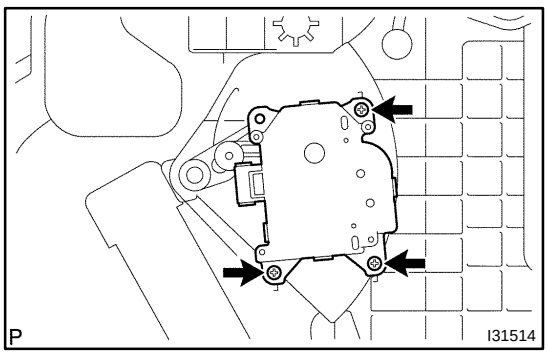

24. REMOVE AIRMIX DAMPER SERVO SUB–ASSY

(a) Remove the 3 screws and air mix damper servo sub–assy.

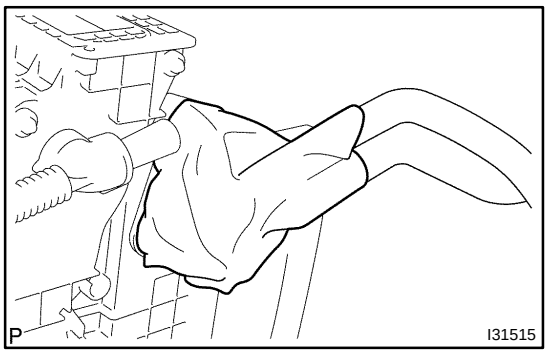

25. REMOVE AIR CONDITIONING TUBE ASSY

(a) Remove the packing.

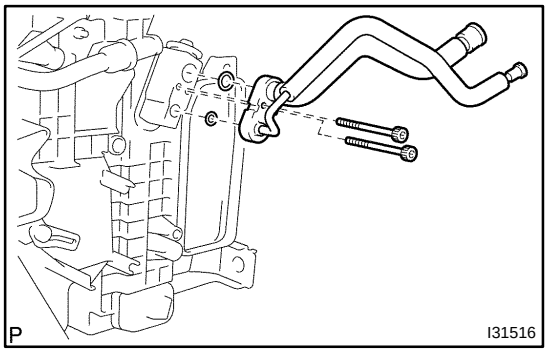

(b) Using a hexagon wrench 4 mm (0.16 in.), remove the 2 hexagon bolts and air conditioning tube assy.

(c) Remove the 2 O–rings from the air conditioning tube assy.

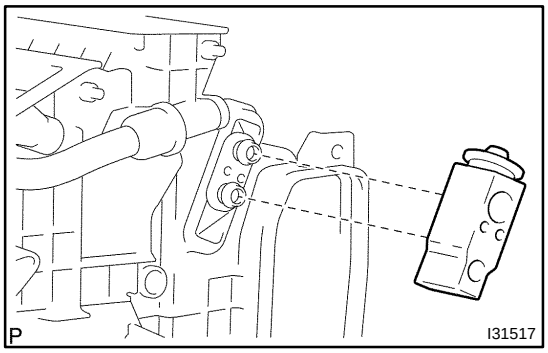

26. REMOVE COOLER EXPANSION VALVE

(a) Remove the cooler expansion valve from the cooler evaporator sub–assy No. 1.

27. REMOVE COOLER THERMISTOR NO.1

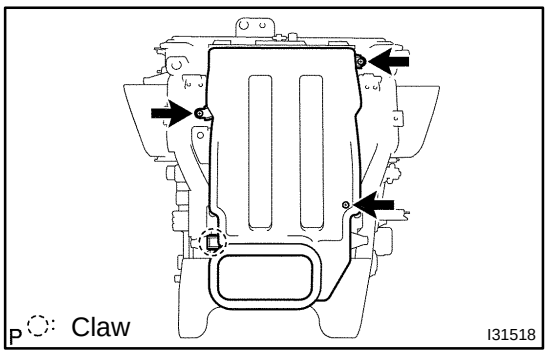

28. REMOVE COOLER EVAPORATOR SUB–ASSY NO.1

(a) Auto A/C model:
Release the fitting claw, remove the 3 screws and air duct sub–assy.

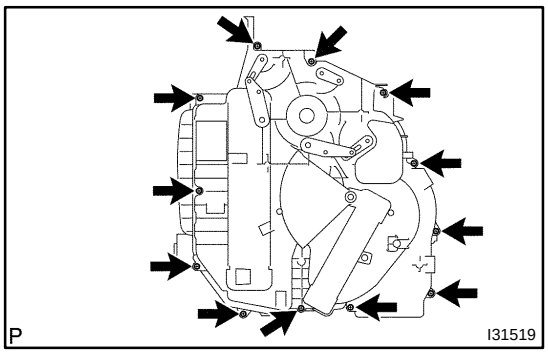

(b) Remove the 12 screws and heater case LH.
(c) Remove the cooler evaporator sub–assy No. 1 from the heater case RH.

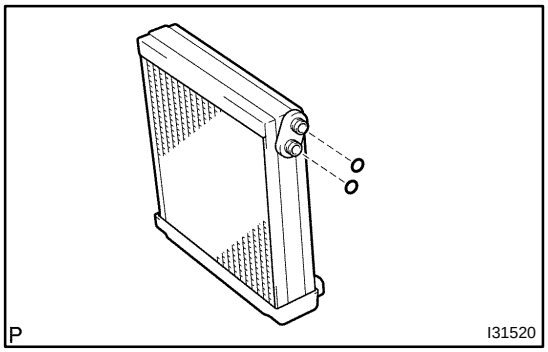

(d) Remove the 2 O–rings from the cooler evaporator sub–assy No. 1.

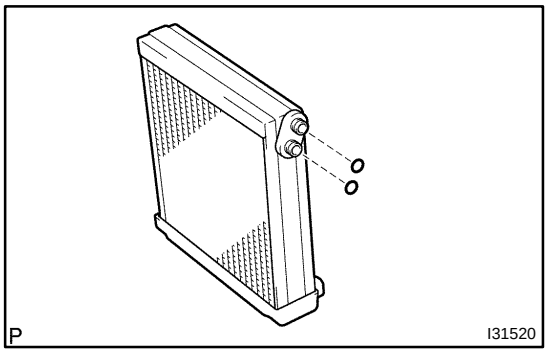

29. INSTALL COOLER EVAPORATOR SUB–ASSY NO.1

(a) Apply compressor oil to the contact surfaces of 2 new O–rings and the cooler expansion valve and install them.
Compressor oil: ND–OIL 8 or equivalent

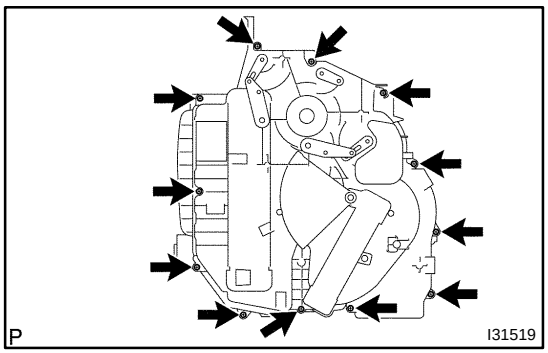

(b) Install the cooler evaporator sub–assy No. 1 to the heater case RH.
(c) Install the heater case LH with the 12 screws.

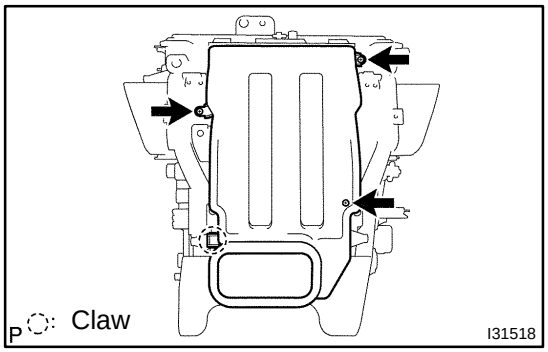

(d) Auto A/C model:
Install the air duct sub–assy with the 3 screws.

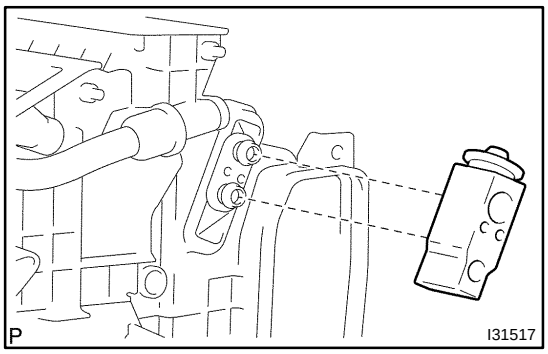

30. INSTALL COOLER EXPANSION VALVE

(a) Install the cooler expansion valve to the cooler evaporator No. 1.

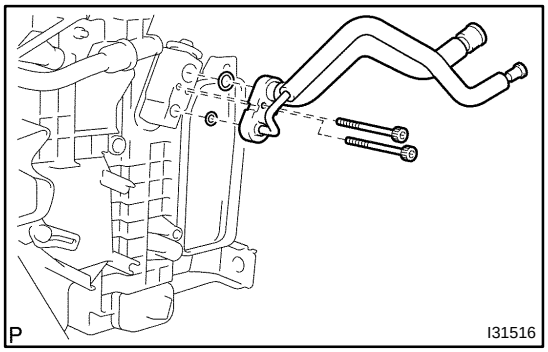

31. INSTALL AIR CONDITIONING TUBE ASSY

(a) Apply compressor oil to the contact surfaces of 2 new O–rings and the air conditioning tube assy and install them.
Compressor oil: ND–OIL 8 or equivalent

(b) Using a hexagon wrench 4 mm (0.16 in.), install the air conditioner tube assy and 2 hexagon bolts to the cooler evaporator sub–assy No. 1.
Torque: 3.5 N·m (35 kgf·cm, 30 in.·lbf)

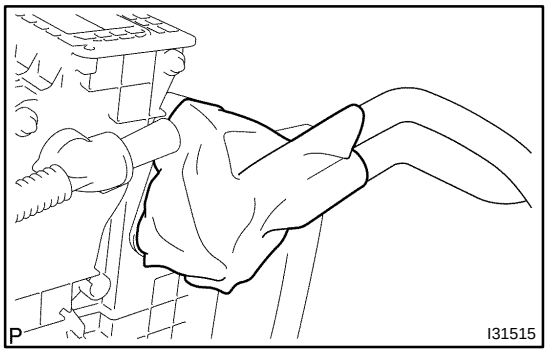

(c) Install the packing.

HINT:

Securely attach so that the gap in the packing will not be mode.

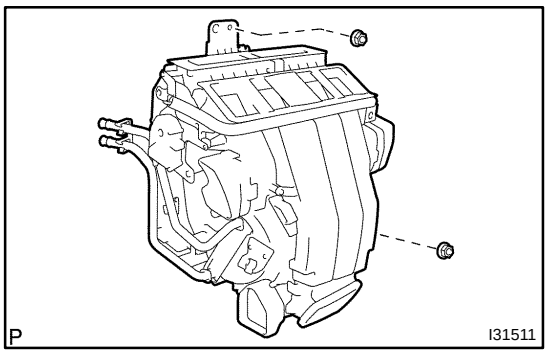

32. INSTALL AIR CONDITIONING RADIATOR ASSY

(a) Install the air conditioning radiator assy with the 2 nuts.
Torque: 1.5 N·m (15 kgf·cm, 12 in.·lbf)

(b) Connect the connector.

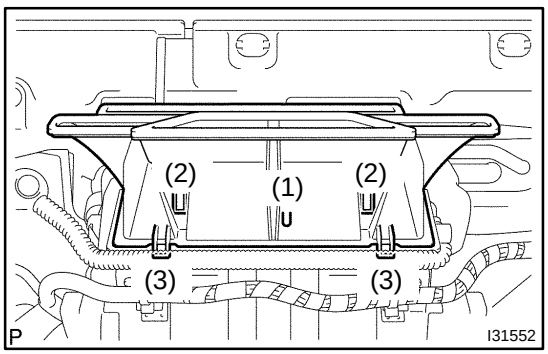

33. INSTALL DEFROSTER NOZZLE ASSY LOWER

(a) Install the defroster nozzle assy lower.

NOTICE:

After locating the pin (1) in the illustration, install (2), then (3).

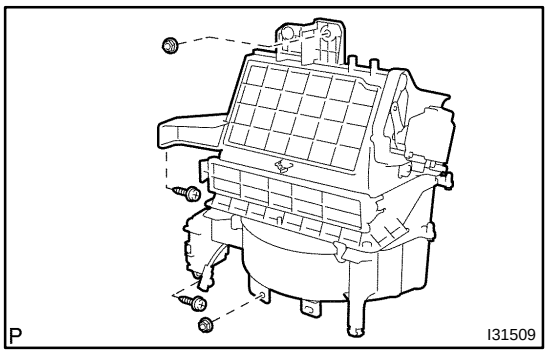

34. INSTALL BLOWER ASSY

(a) Install the blower assy with the 2 screws and 2 nuts.
Torque: 1.5 N·m (15 kgf·cm, 12 in.·lbf)

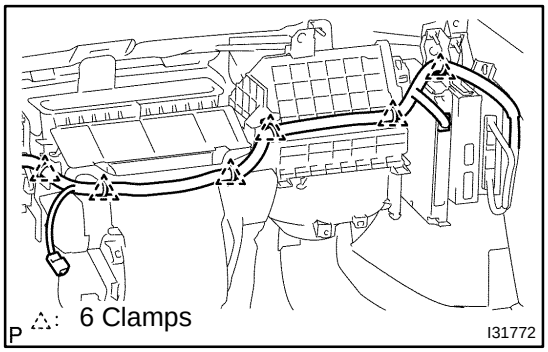

(b) Install the 6 clamps, connect the wire harness.

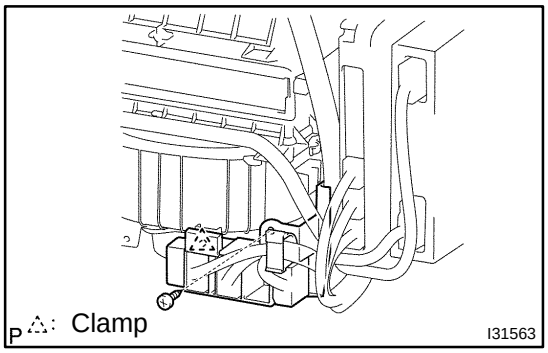

(c) Install the blower connector holder with the screw and clamp.
(d) Connect the connectors.

35. INSTALL INSTRUMENT PANEL REINFORCEMENT

(a) Install the instrument panel reinforcement with the 7 bolts and 3 caps.

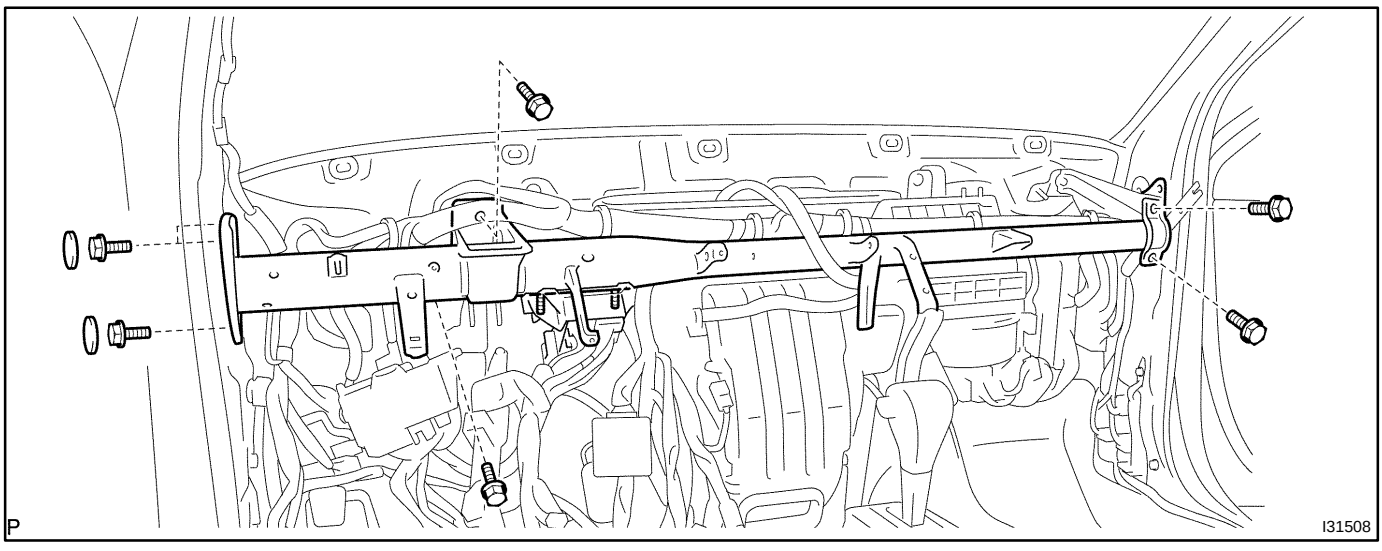

(b) Install the 3 earth wires with the 3 nuts.

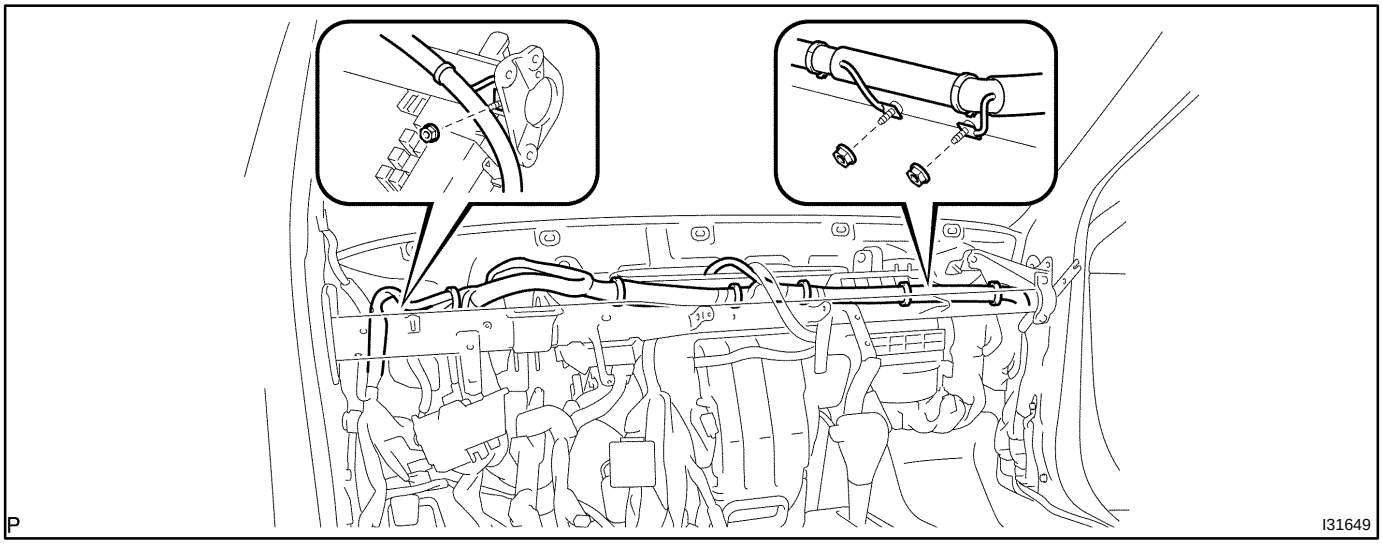

(c) Install the 7 clamps, connect the wire harness.

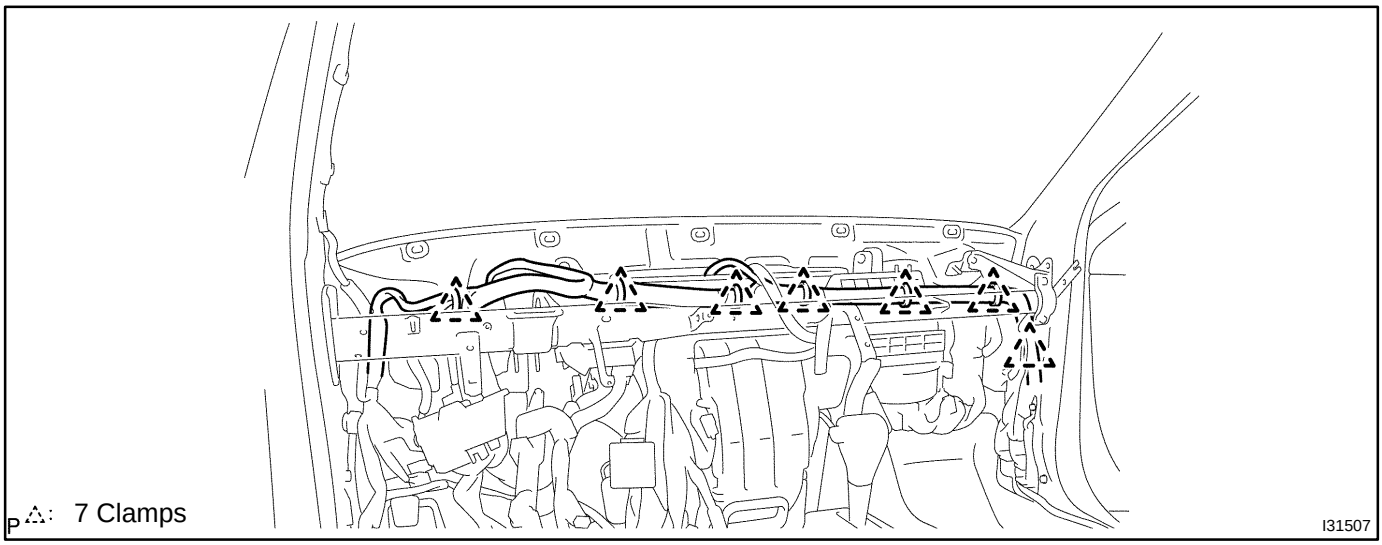

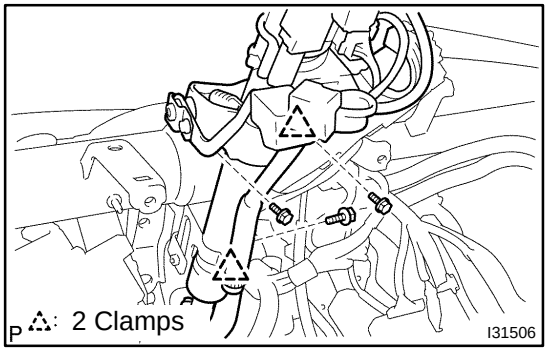

36. INSTALL STEERING COLUMN ASSY

(a) Install the steering column assy with the 3 bolts.

(b) Install the 2 clamps.

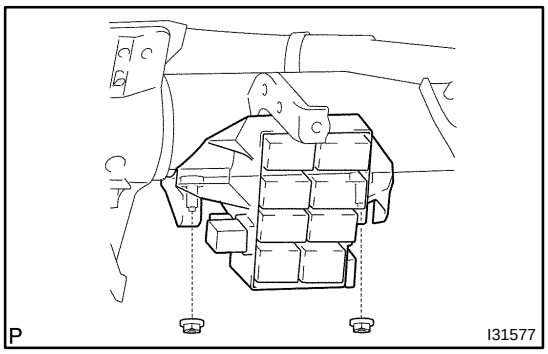

(c) Install the steering side connector block with the 2 nuts.
Torque: 8.4 N·m (85 kgf·cm, 73 in.·lbf)

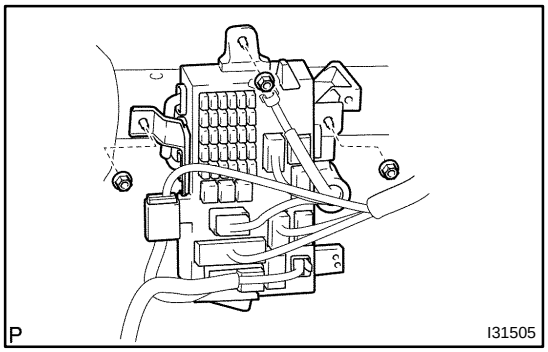

(d) Install the driver side junction block with the 3 nuts.
Torque: 8.4 N·m (85 kgf·cm, 73 in.·lbf)

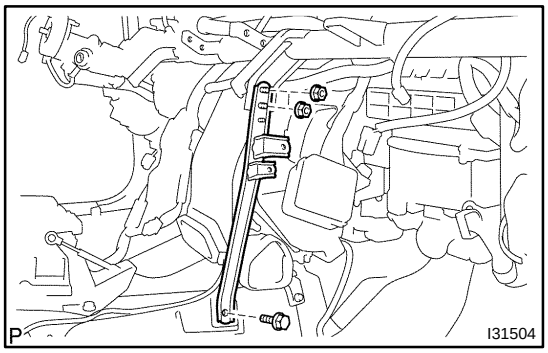

37. INSTALL INSTRUMENT PANEL BRACE SUB–ASSY NO.2

(a) Install the instrument panel brace sub–assy No. 2 with the 2 nuts and bolt.

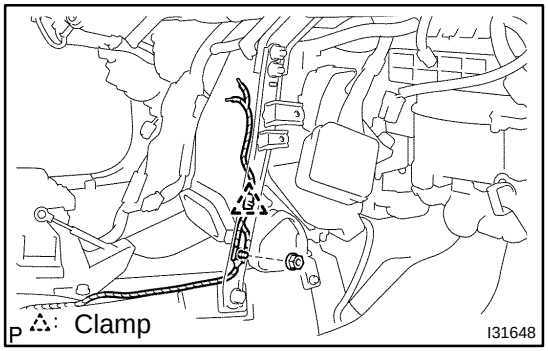

(b) Install the nut and clamp.

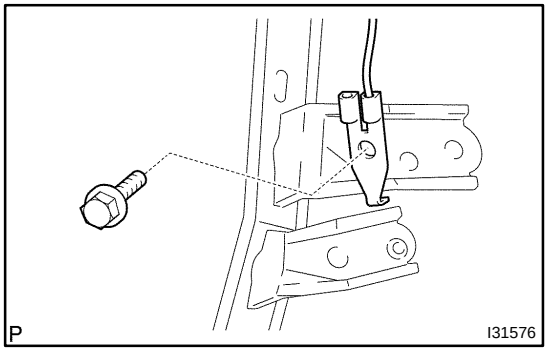

(c) Install the earth wire with the bolt.

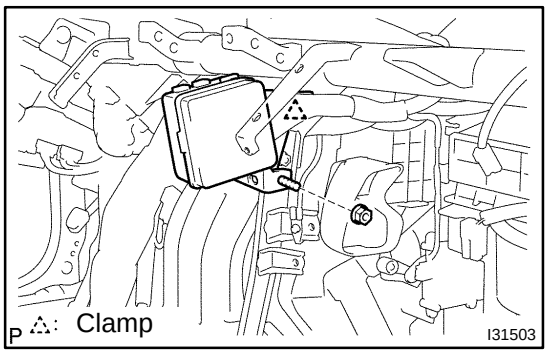

(d) Install the passenger side junction block with the nut and clamp.
Torque: 8.4 N·m (85 kgf·cm, 73 in.·lbf)

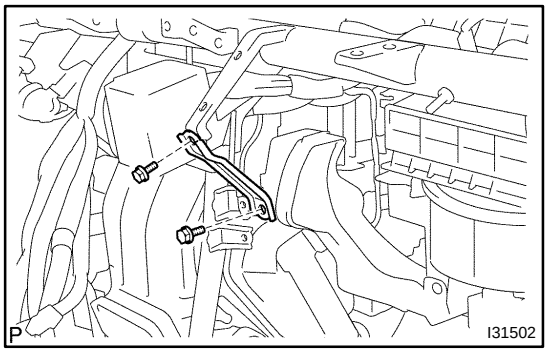

38. INSTALL INSTRUMENT FINISH PANEL RETAINER LOWER

(a) Install the instrument finish panel retainer lower with the 2 bolts.

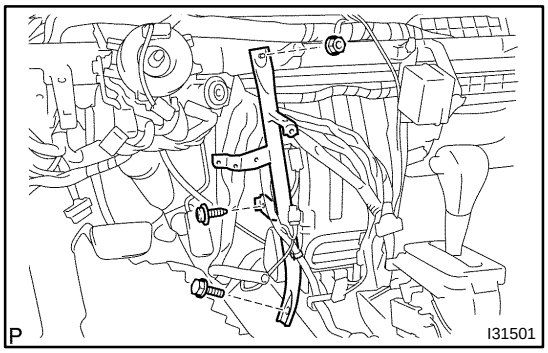

39. INSTALL INSTRUMENT PANEL BRACE SUB–ASSY NO.1

(a) Install the instrument panel brace sub–assy No. 1 with the nut.
(b) Install the bolt and screw.
Torque: 9.8 N·m (100 kgf·cm, 87 in.·lbf) (Screw)

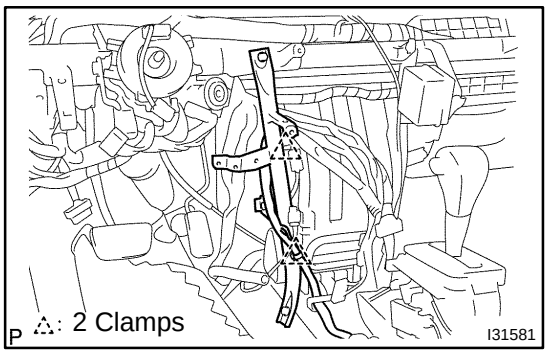

(c) Install the 2 clamps.

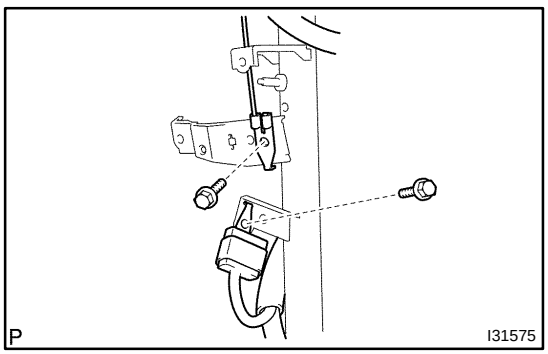

(d) Install the 2 earth wires with the 2 bolts.

40. INSTALL INSTRUMENT PANEL SAFETY PAD SUB–ASSY
(See page 71–12)

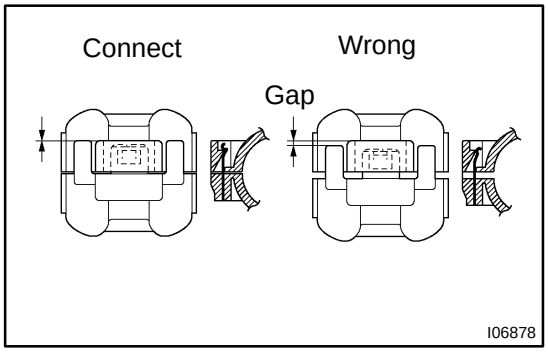

41. INSTALL COOLER REFRIGERANT SUCTION HOSE NO.1

(a) Lubricate new O–ring with compressor oil and install them to the hose.
Compressor oil: ND–OIL 8 or equivalent
(b) Install the cooler refrigerant suction hose No.1 and piping clamp.

HINT:
After connection, check the fitting for claw of the piping clamp.

42. INSTALL COOLER REFRIGERANT LIQUID PIPE A

HINT:
Install in the same way as the cooler refrigerant suction hose No. 1.

43. ADD COOLANT
1MZ–FE: (See page 16–20)
2AZ–FE: (See page 16–6)

44. CHARGE REFRIGERANT (See page 55–18)
SST 07110–58060 (07117–58060, 07117–58070, 07117–58080, 07117–58090, 07117–78050, 07117–88060, 07117–88070, 07117–88080)
Specified amount: 550 ± 50 g (19.37 ± 1.76 oz.)

45. WARM UP ENGINE

46. CHECK ENGINE COOLANT LEAK
1MZ–FE: (See page 16–14)
2AZ–FE: (See page 16–1)

47. INSPECT LEAKAGE OF REFRIGERANT (See page 55–18)

BLOWER ASSY

COMPONENTS

550C2–01

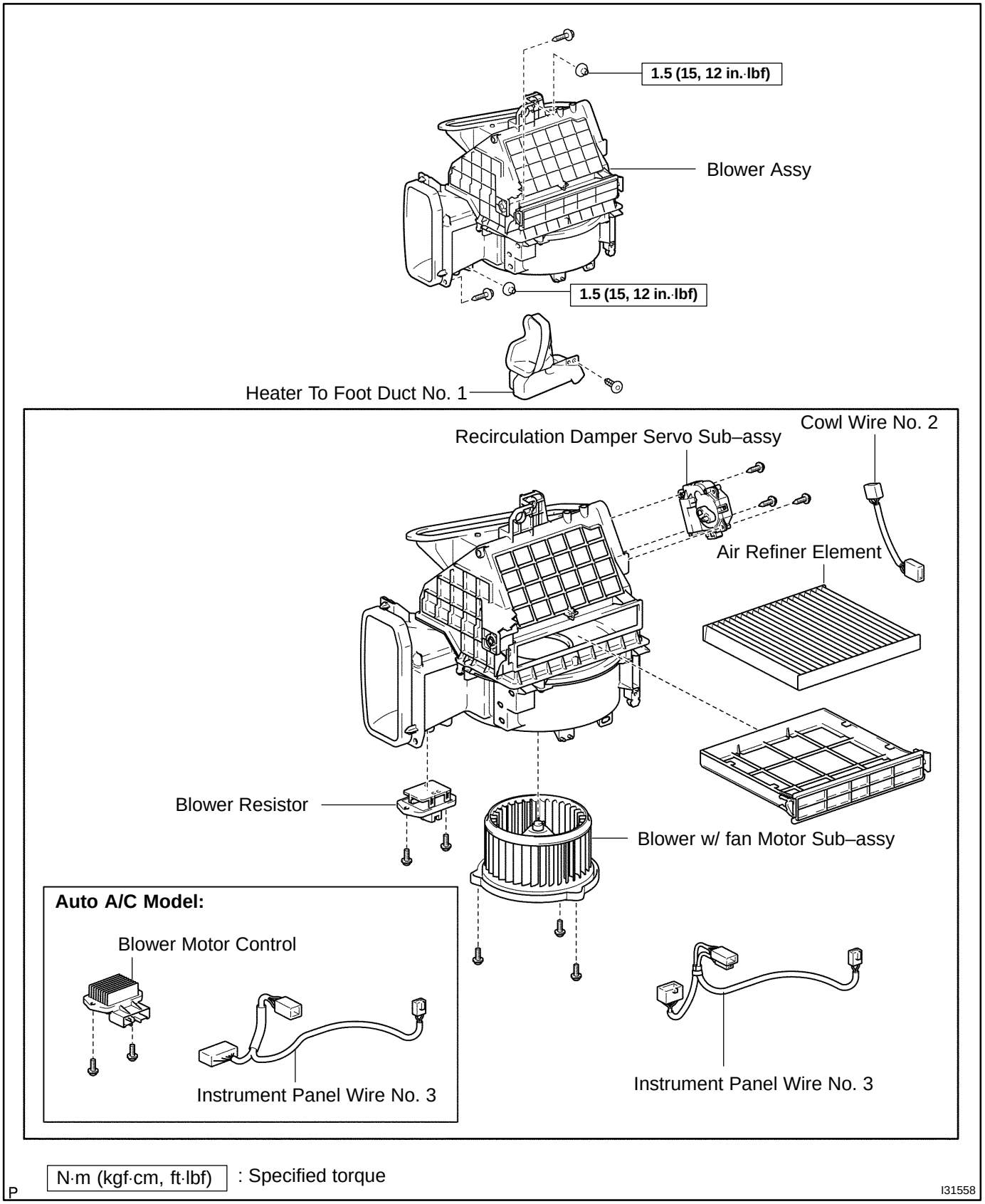

550C3–01

OVERHAUL

HINT:

COMPONENTS: See page 55–45

1. **REMOVE INSTRUMENT PANEL SAFETY PAD SUB–ASSY (See page 71–12)**
2. **REMOVE HEATER TO FOOT DUCT NO.1 (See page 55–29)**
3. **REMOVE BLOWER ASSY (See page 55–29)**
4. **REMOVE AIR REFINER ELEMENT**

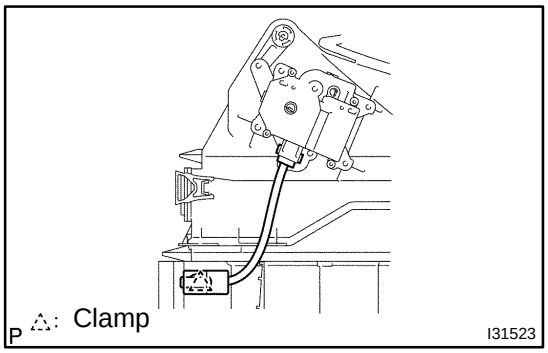

5. REMOVE COWL WIRE NO.2

(a) Remove the clamp and cowl wire No. 2.

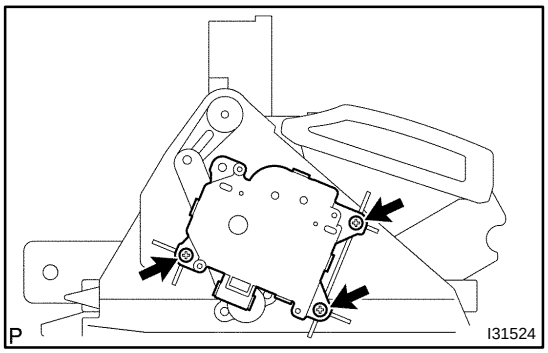

6. REMOVE RECIRCULATION DAMPER SERVO SUB–ASSY

(a) Remove the 3 screws and recirculation damper servo sub–assy.

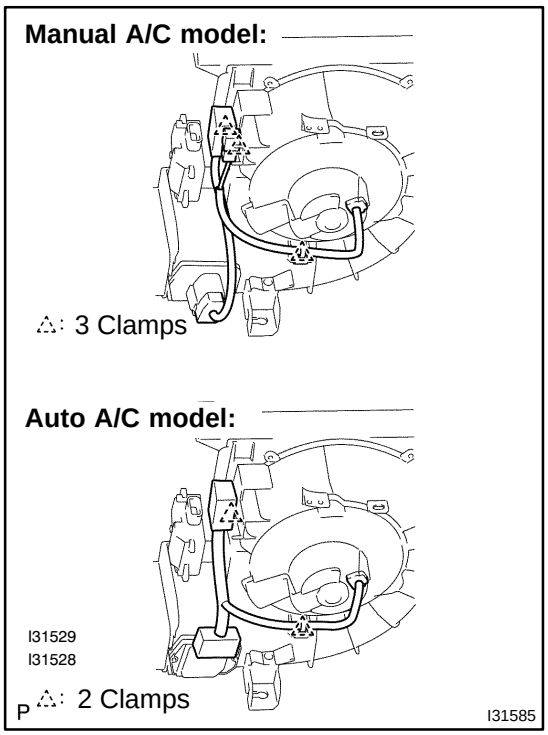

7. REMOVE INSTRUMENT PANEL WIRE NO.3

(a) Manual A/C model:
Disconnect the connectors, remove the 3 clamps and instrument panel wire No. 3.

(b) Auto A/C model:
Disconnect the connectors, remove the 2 clamps and instrument panel wire No. 3.

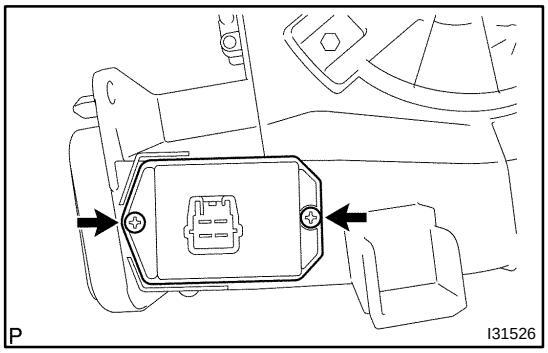

8. REMOVE BLOWER RESISTOR (MANUAL AIR CONDITIONER)

(a) Remove the 2 screws and blower resistor.

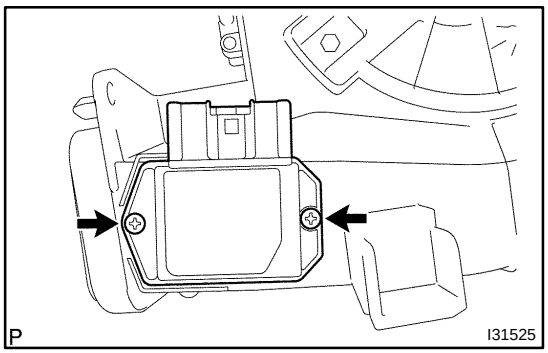

9. REMOVE BLOWER MOTOR CONTROL (AUTO AIR CONDITIONER)

(a) Remove the 2 screws and blower motor control.

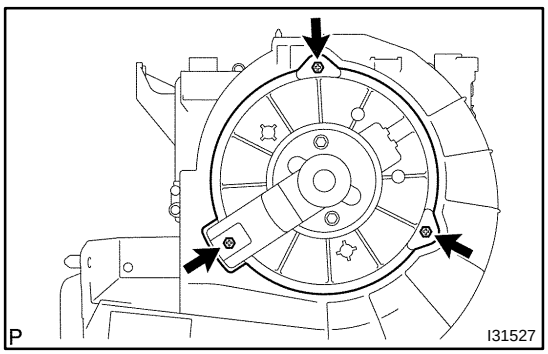

10. REMOVE BLOWER W/FAN MOTOR SUB–ASSY

(a) Remove the 3 screws and blower w/fan motor sub–assy.

11. INSTALL BLOWER ASSY
(See page 55–29)

12. INSTALL INSTRUMENT PANEL SAFETY PAD SUB–ASSY
(See page 71–12)

COOLER COMPRESSOR ASSY (1MZ–FE)

COMPONENTS

550C4–01

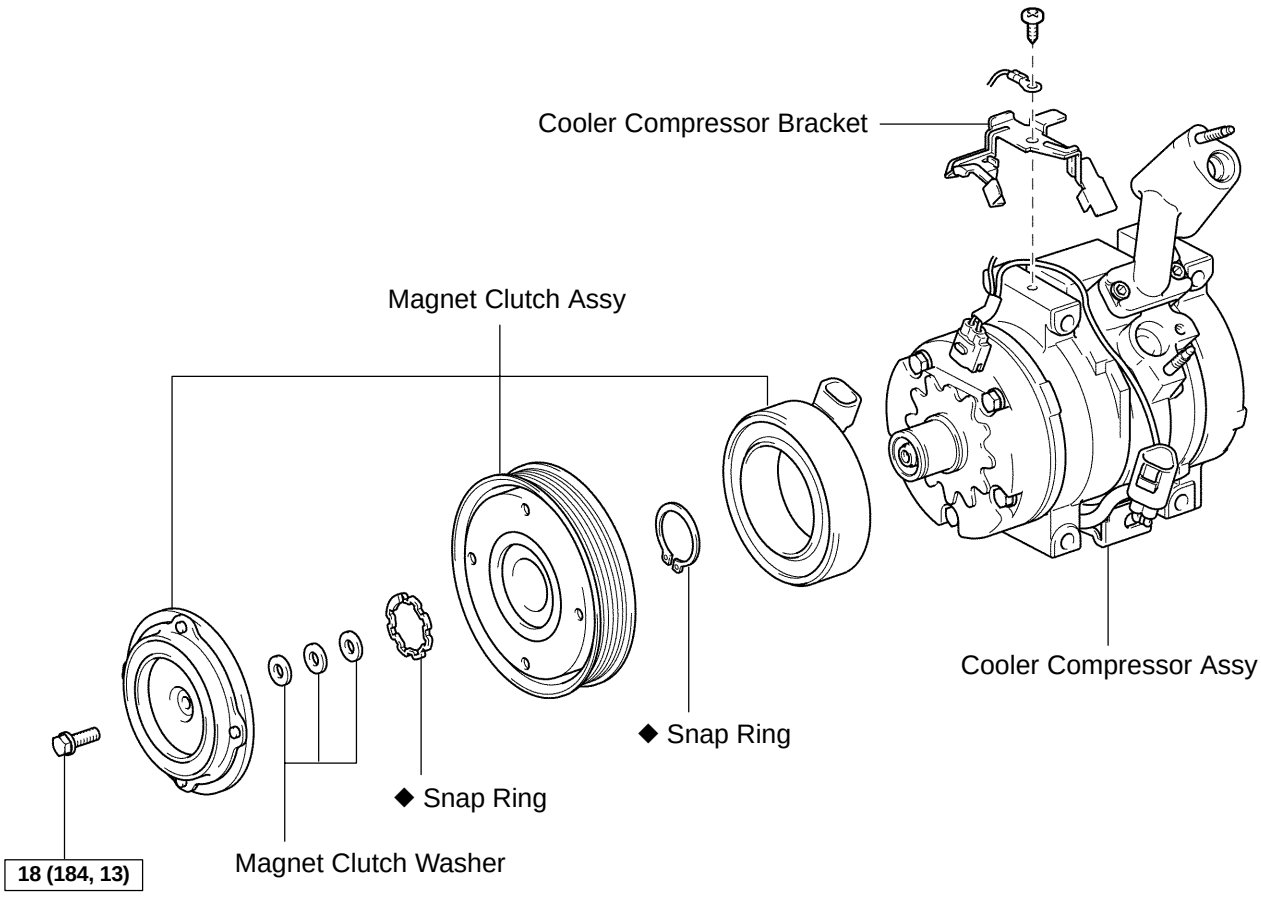

N·m (kgf·cm, ft·lbf) : Specified torque

◆ Non–reusable part

P

I31774

550C5–01

REPLACEMENT

HINT:

COMPONENTS: See page 55–49

1. **DISCHARGE REFRIGERANT FROM REFRIGERATION SYSTEM (See page 55–18)**
   SST 07110–58060 (07117–58080, 07117–58090, 07117–78050, 07117–88060, 07117–88070, 07117–88080)
2. **REMOVE V (COOLER COMPRESSOR TO CRANKSHAFT PULLEY) BELT NO.1 (See page 55–21)**
3. **REMOVE GENERATOR ASSY (See page 19–33)**

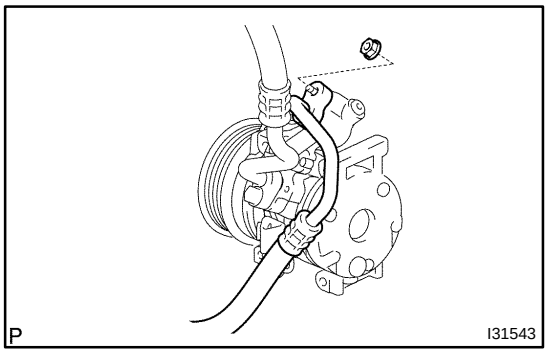

4. **DISCONNECT COOLER REFRIGERANT DISCHARGE HOSE NO.1**

(a) Remove the nut and disconnect the cooler refrigerant discharge hose No. 1.
(b) Remove the O–ring from the cooler refrigerant discharge hose No. 1.

NOTICE:
Seal the opening of the disconnected parts using vinyl tape to prevent moisture and foreign matter from entering.

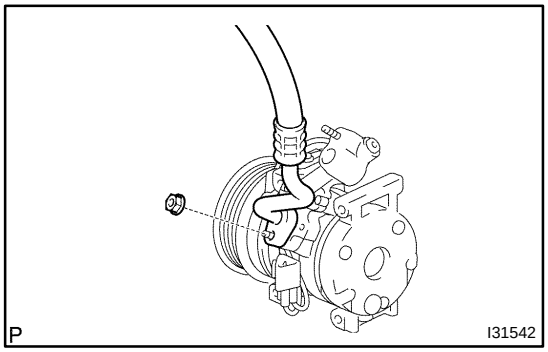

5. **DISCONNECT COOLER REFRIGERANT SUCTION HOSE NO.1**

(a) Remove the nut and disconnect the cooler refrigerant suction hose No. 1.
(b) Remove the O–ring from the cooler refrigerant suction hose No. 1.

NOTICE:
Seal the opening of the disconnected parts using vinyl tape to prevent moisture and foreign matter from entering.

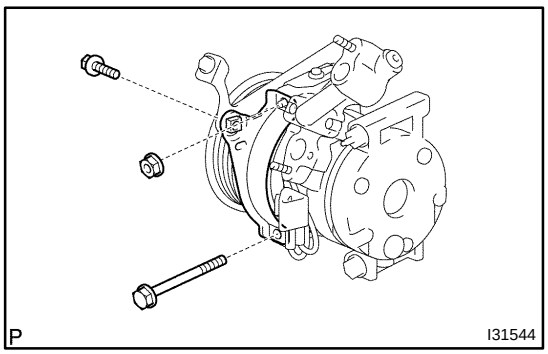

6. **REMOVE COMPRESSOR AND MAGNETIC CLUTCH**

(a) Disconnect the connector and clamp.
(b) Remove the 2 bolts, nut and cooler compressor bracket.

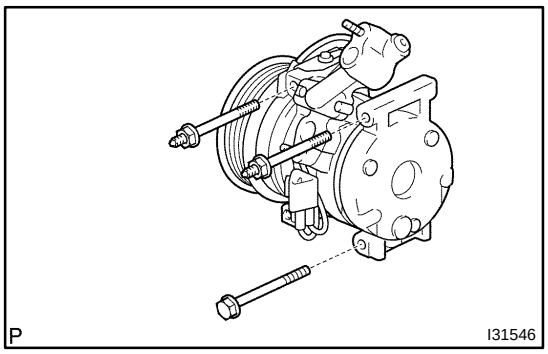

(c) Remove the 3 bolts and compressor and magnetic clutch.

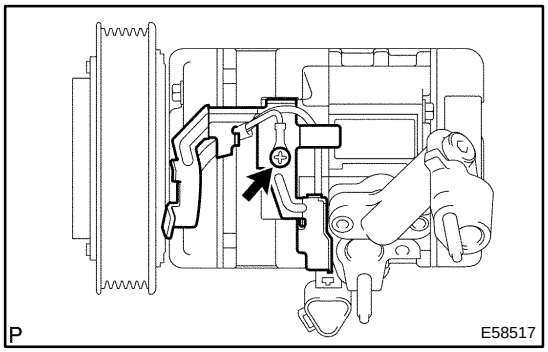

7. REMOVE COOLER COMPRESSOR BRACKET

(a) Remove the screw, earth wire and cooler compressor bracket.

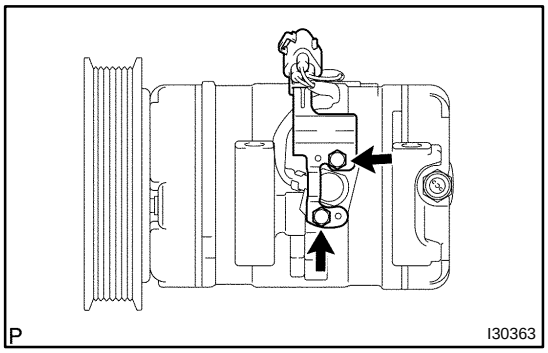

8. REMOVE MAGNET CLUTCH ASSY

(a) Remove the bolt and bracket.
(b) Place the compressor and magnetic clutch in vise.

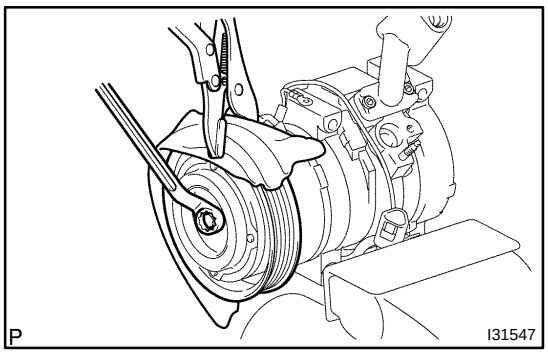

(c) Using a vise pliers, hold the magnet clutch hub.
(d) Remove the bolt, magnet clutch hub and magnet clutch washer.

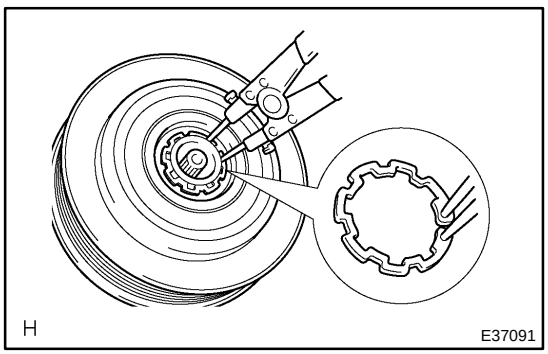

(e) Using a snap ring expander, remove the snap ring and magnet clutch rotor.
(f) Disconnect the connector.

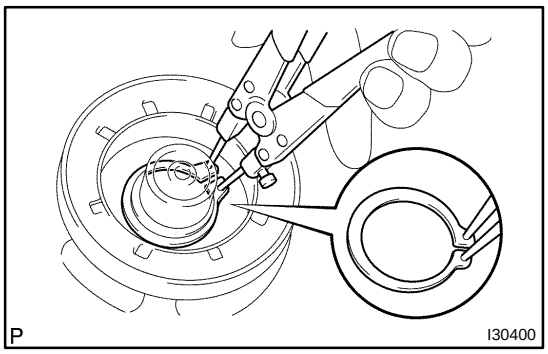

(g) Using a snap ring expander, remove the snap ring and magnet clutch starter.

9. REMOVE COOLER COMPRESSOR ASSY

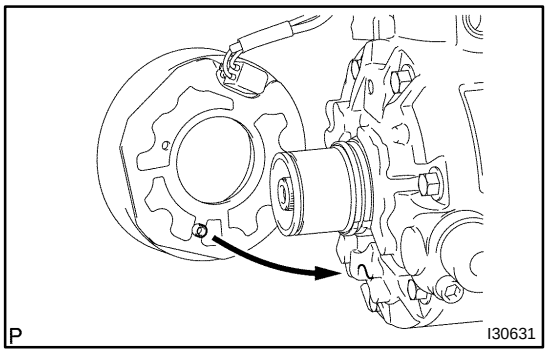

10. INSTALL MAGNET CLUTCH ASSY

(a) Matching the parts shown in the illustration, install the magnet clutch starter.

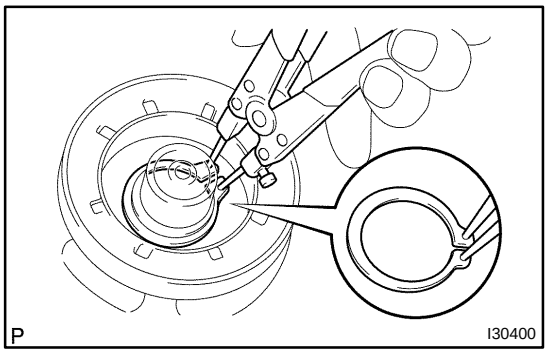

(b) Using a snap ring expander, install a new snap ring with the chamfered side facing up.
(c) Connect the connector.

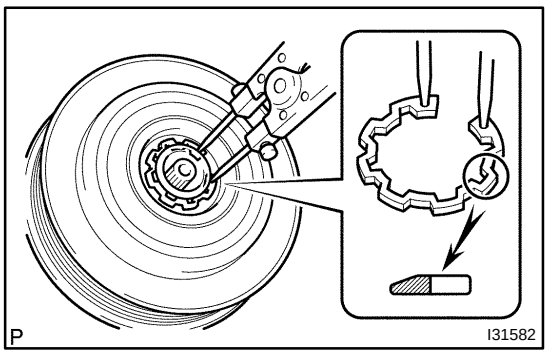

(d) Using a snap ring expander, install the magnet clutch rotor and a new snap ring with the chamfered side facing up.
(e) Install the magnet clutch washer and magnet clutch hub.

NOTICE:
Do not change the combination of the magnet clutch washers used before disassembly.

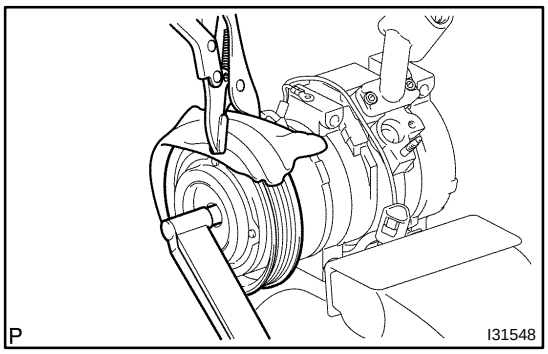

(f) Using a vise pliers, hold the magnet clutch hub and install the bolt.
Torque: 18 N·m (184 kgf·cm, 13 ft·lbf)

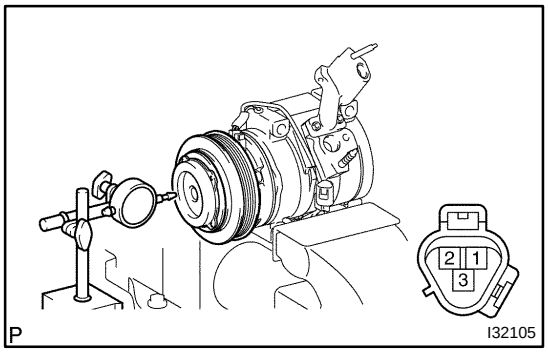

11. INSPECT MAGNETIC CLUTCH CLEARANCE

(a) Set the dial indicator to the magnet clutch hub.

(b) Connect the battery positive lead to the terminal 3 of magnet clutch connector and the negative lead to the earth wire. Turn on and off the magnet clutch and measure the clearance.
Standard clearance:
0.35 – 0.60 mm (0.014 – 0.024 in.)

If the measured value is out of the standard range, remove the magnet clutch hub and adjust it with magnet clutch washers.

NOTICE:
Adjustment shall be performed with 3 or less magnet clutch washers.

(c) Remove the compressor and magnetic clutch from the vise.

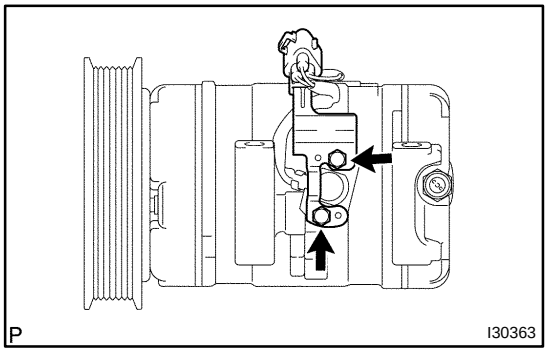

(d) Install the bolt and bracket.

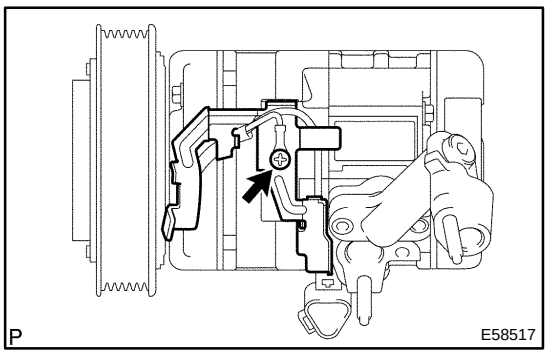

12. INSTALL COOLER COMPRESSOR BRACKET

(a) Install the earth wire and cooler compressor bracket with the screw.

13. INSPECT COMPRESSOR OIL

(a) When replacing the compressor and magnetic clutch with new one, after gradually removing the refrigerant gas from the service valve, drain the following amount of oil from the new compressor and magnetic clutch before installation.

Standard:

(Oil capacity inside new compressor and magnetic clutch: 120 + 15 cc (4.1 +0.51 fl.oz.)) – (Remaining oil amount in the removed compressor and magnetic clutch) = (Oil amount to be removed when replacing)

NOTICE:

- **When checking the compressor oil level, observe the precautions on the cooler removal/installation.**
- **Because compressor oil remains in the pipes of the vehicle, if a new compressor and magnetic clutch is installed without removing some oil inside, the oil amount becomes too much, preventing heat exchange in the refrigerant cycle and causing refrigerant failure.**
- **If the remaining oil in the removed compressor and magnetic clutch is too small in volume, check for oil leakage.**
- **Be sure to use ND–OIL8 for compressor oil.**

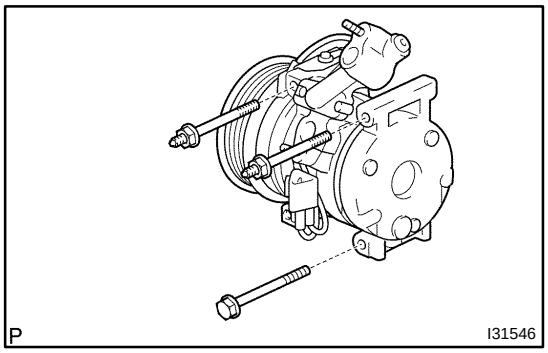

14. TEMPORARY TIGHTEN COMPRESSOR AND MAGNETIC CLUTCH

(a) Temporarily the compressor and magnetic clutch with the 3 bolts.

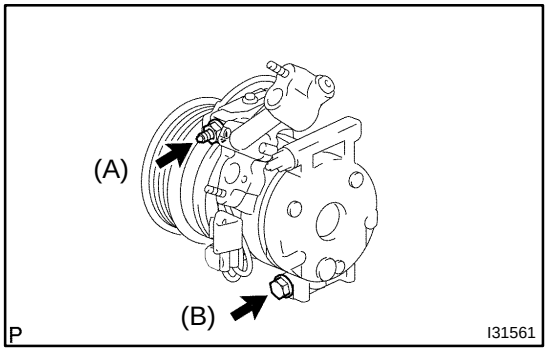

15. FULLY TIGHTEN COMPRESSOR AND MAGNETIC CLUTCH

(a) Tighten the compressor and magnetic clutch with the bolt (A) and bolt (B).

Torque: 25 N·m (250 kgf·cm, 18 ft·lbf)

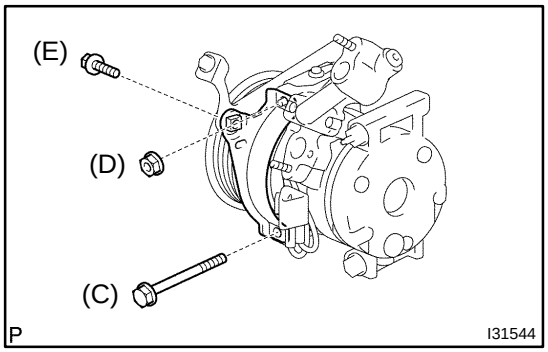

(b) Install the cooler compressor bracket with the 2 bolts and nut.

Torque:

25 N·m (250 kgf·cm, 18 ft·lbf) (Bolt (C))

25 N·m (250 kgf·cm, 18 ft·lbf) (Nut (D))

18 N·m (184 kgf·cm, 13 ft·lbf) (Bolt (E))

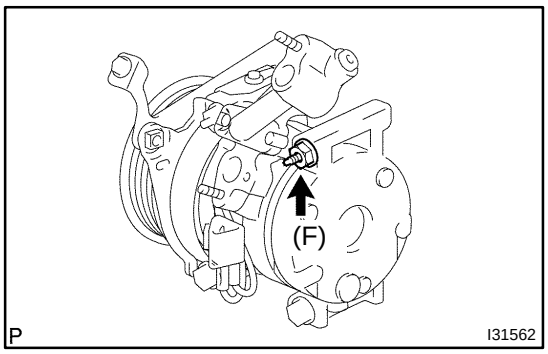

(c) Tighten the compressor and magnetic clutch with the bolt (F).
Torque: 25 N·m (250 kgf·cm, 18 ft·lbf)
(d) connect the connector.

16. INSTALL COOLER REFRIGERANT SUCTION HOSE NO.1

(a) Remove the attached vinyl tape from the hose.
(b) Sufficiently apply compressor oil to the new O–ring and fit surface of the compressor and magnetic clutch.
Compressor oil: ND–OIL 8 or equivalent
(c) Install a O–ring to the cooler refrigerant suction hose No. 1.

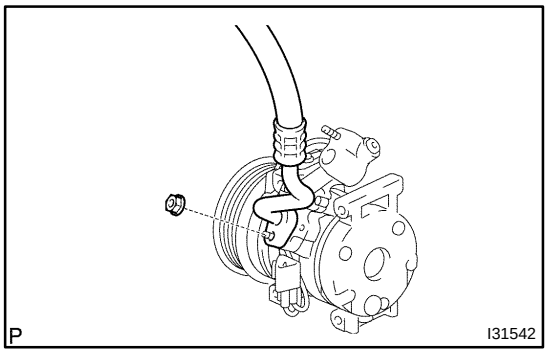

(d) Install the cooler refrigerant suction hose No. 1 to the compressor and magnetic clutch with the nut.
Torque: 9.8 N·m (100 kgf·cm,87 in.·lbf)

17. INSTALL COOLER REFRIGERANT DISCHARGE HOSE NO.1

(a) Remove the attached vinyl tape from the hose.
(b) Sufficiently apply compressor oil to the new O–ring and fit surface of the compressor and magnetic clutch.
Compressor oil: ND–OIL 8 or equivalent
(c) Install a O–ring to the cooler refrigerant discharge hose No.1.

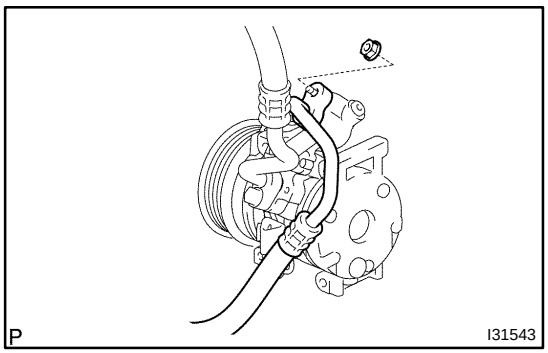

(d) Install the cooler refrigerant discharge hose No. 1 to the compressor and magnetic clutch with the nut.
Torque: 9.8 N·m (100 kgf·cm,87 in.·lbf)

18. INSTALL GENERATOR ASSY
(See page 19–33)
19. INSTALL V (COOLER COMPRESSOR TO CRANKSHAFT PULLEY) BELT NO.1
(See page 55–21)
20. CHARGE REFRIGERANT (See page 55–18)
SST 07110–58060 (07117–58060, 07117–58070, 07117–58080, 07117–58090, 07117–78050, 07117–88060, 07117–88070, 07117–88080)
21. WARM UP ENGINE
22. INSPECT LEAKAGE OF REFRIGERANT (See page 55–18)

COOLER COMPRESSOR ASSY (2AZ–FE)

COMPONENTS

550C6–01

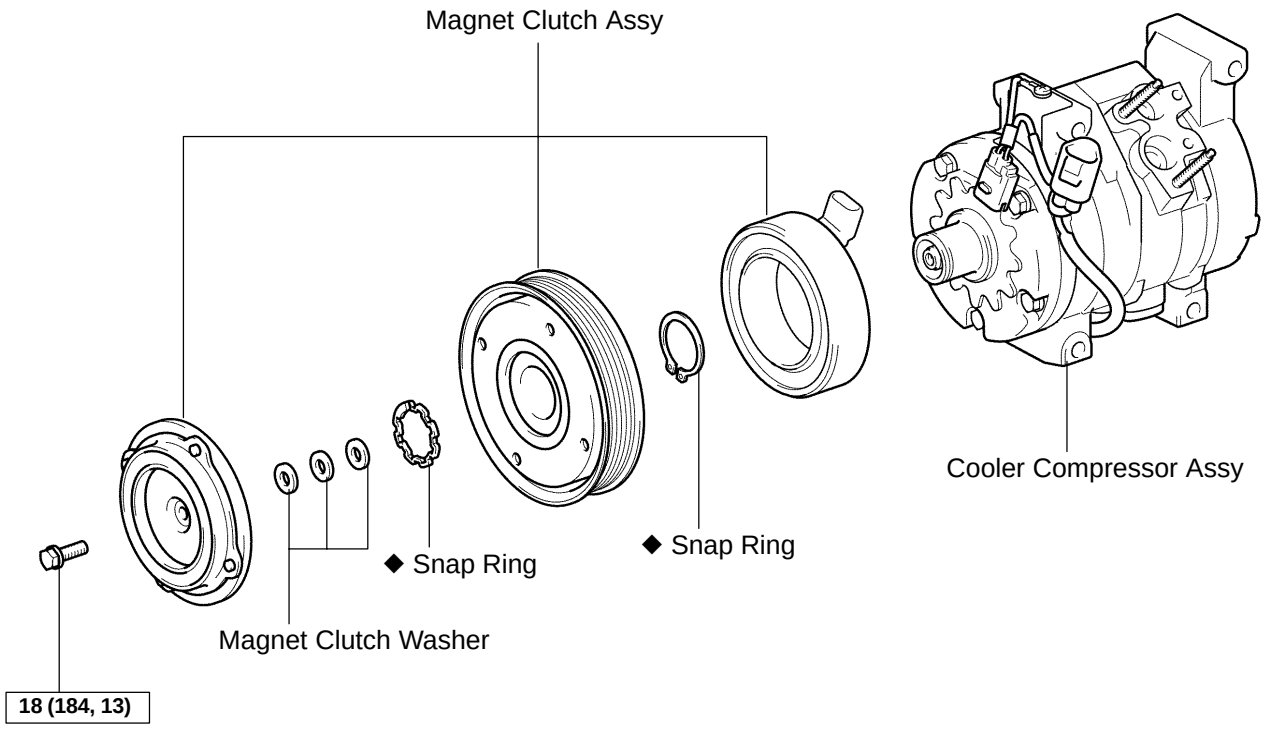

N·m (kgf·cm, ft·lbf) : Specified torque

◆ Non–reusable part

P

I31629

550C7–01

REPLACEMENT

HINT:

COMPONENTS: See page 55–56

1. **DISCHARGE REFRIGERANT FROM REFRIGERATION SYSTEM (See page 55–18)**
   SST 07110–58060 (07117–58080, 07117–58090, 07117–78050, 07117–88060, 07117–88070, 07117–88080)
2. **REMOVE FAN AND GENERATOR V BELT (See page 14–5)**
   SST 09249–63010
3. **REMOVE GENERATOR ASSY (See page 19–13)**

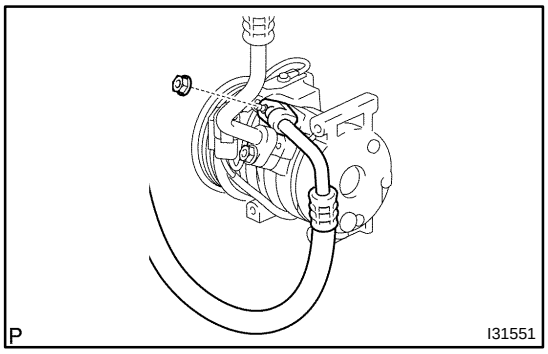

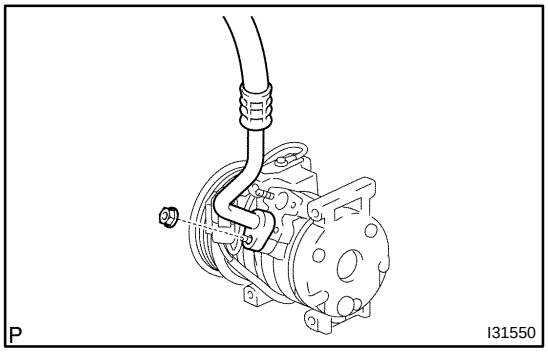

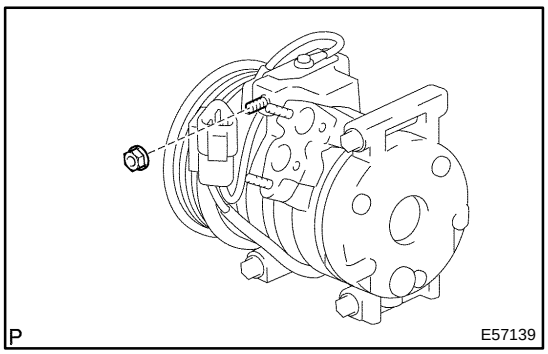

4. **DISCONNECT COOLER REFRIGERANT DISCHARGE HOSE NO.1**

(a) Remove the nut and disconnect the cooler refrigerant discharge hose No. 1.
(b) Remove the O–ring from the cooler refrigerant discharge hose No. 1.

NOTICE:
Seal the opening of the disconnected parts using vinyl tape to prevent moisture and foreign matter from entering.

5. **DISCONNECT COOLER REFRIGERANT SUCTION HOSE NO.1**

(a) Remove the nut and disconnect the cooler refrigerant suction hose No. 1.
(b) Remove the O–ring from the cooler refrigerant suction hose No. 1.

NOTICE:
Seal the opening of the disconnected parts using vinyl tape to prevent moisture and foreign matter from entering.

6. **REMOVE COMPRESSOR AND MAGNETIC CLUTCH**

(a) Disconnect the connector.
(b) Remove the nut.

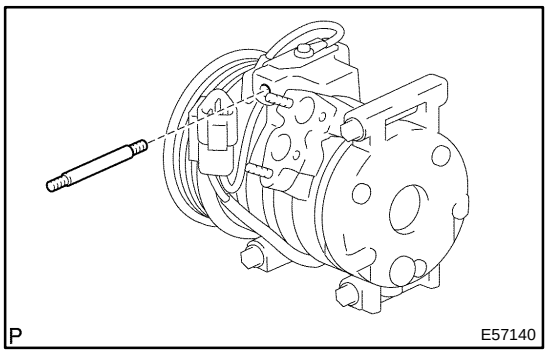

(c) Using a torque socket wrench (E8), remove the bolt.

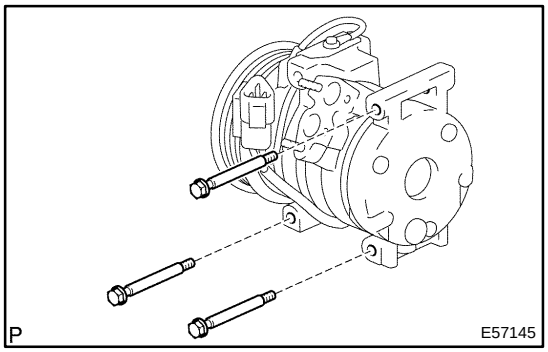

(d) Remove the 3 bolts and compressor and magnetic clutch.

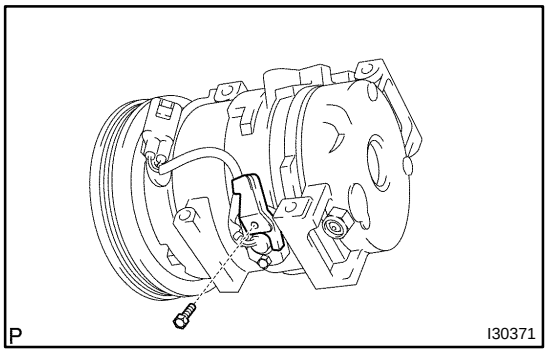

7. REMOVE MAGNET CLUTCH ASSY

(a) Remove the bolt and bracket.
(b) Place the compressor and magnetic clutch in vise.

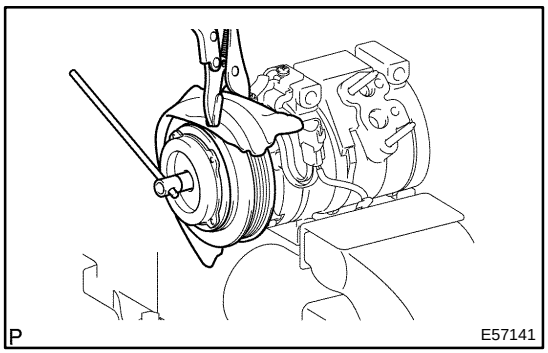

(c) Using a vise pliers, hold the magnet clutch hub.
(d) Remove the bolt, magnet clutch hub and magnet clutch washer.

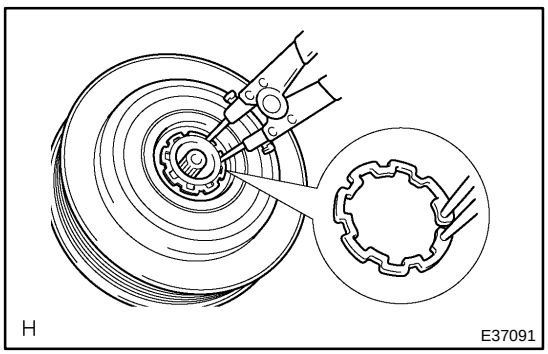

(e) Using a snap ring expander, remove the snap ring and magnet clutch rotor.
(f) Disconnect the connector.

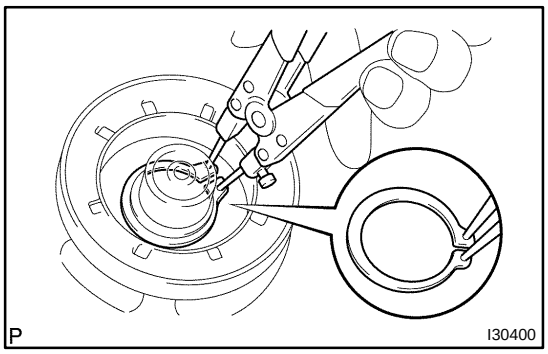

(g) Using a snap ring expander, remove the snap ring and magnet clutch starter.

8. REMOVE COOLER COMPRESSOR ASSY

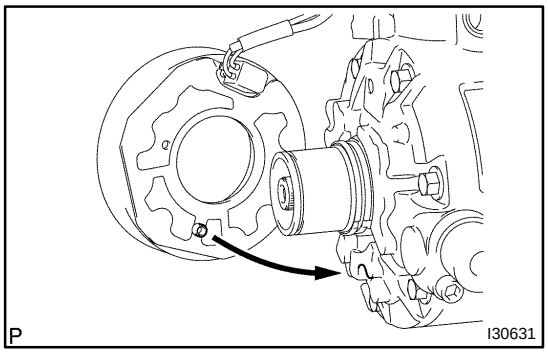

9. INSTALL MAGNET CLUTCH ASSY

(a) Matching the parts shown in the illustration, install the magnet clutch starter.

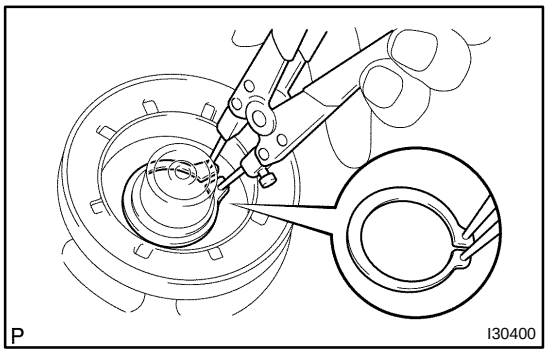

(b) Using a snap ring expander, install a new snap ring with the chamfered side facing up.
(c) Connect the connector.

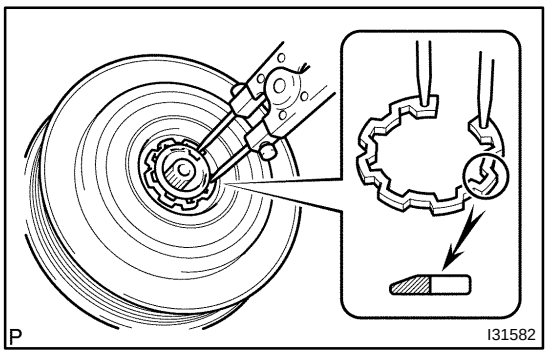

(d) Using a snap ring expander, install the magnet clutch rotor and a new snap ring with the chamfered side facing up.
(e) Install the magnet clutch washer and magnet clutch hub.

NOTICE:
Do not change the combination of the magnet clutch washers used before disassembly.

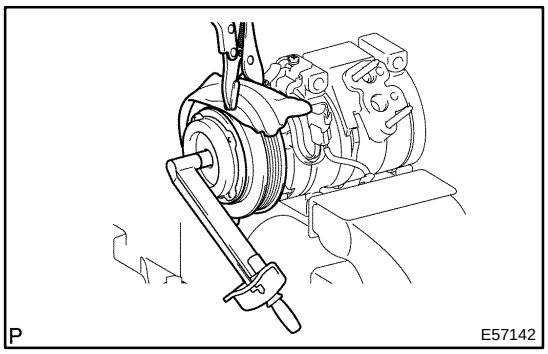

(f) Using a vise pliers, hold the magnet clutch hub and install the bolt.
Torque: 18 N·m (184 kgf·cm, 13 ft·lbf)

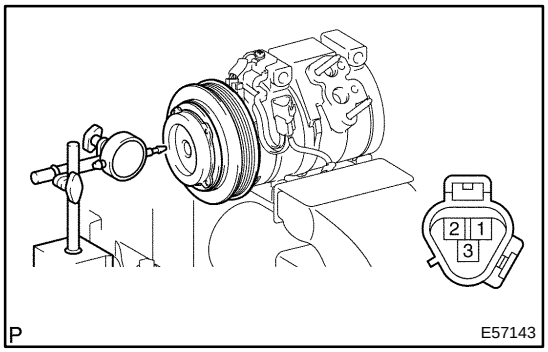

10. INSPECT MAGNETIC CLUTCH CLEARANCE

(a) Set the dial indicator to the magnet clutch hub.

(b) Connect the battery positive lead to the terminal 3 of magnet clutch connector and the negative lead to the earth wire. Turn on and off the magnet clutch and measure the clearance.
Standard clearance:
0.35 – 0.60 mm (0.014 – 0.024 in.)

If the measured value is out of the standard range, remove the magnet clutch hub and adjust it with magnet clutch washers.

NOTICE:
Adjustment shall be performed with 3 or less magnet clutch washers.

(c) Remove the compressor and magnetic clutch from the vise.

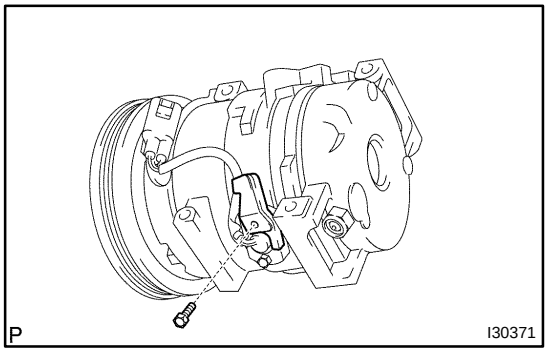

(d) Install the bolt and bracket.

11. INSPECT COMPRESSOR OIL

(a) When replacing the compressor and magnetic clutch with new one, after gradually removing the refrigerant gas from the service valve, drain the following amount of oil from the new compressor and magnetic clutch before installation.

Standard:

(Oil capacity inside new compressor and magnetic clutch: 120 + 15 cc (4.1 + 0.51 fl.oz.)) – (Remaining oil amount in the removed compressor and magnetic clutch) = (Oil amount to be removed when replacing)

NOTICE:

- **When checking the compressor oil level, observe the precautions on the cooler removal/installation.**
- **Because compressor oil remains in the pipes of the vehicle, if a new compressor and magnetic clutch is installed without removing some oil inside, the oil amount becomes too much, preventing heat exchange in the refrigerant cycle and causing refrigerant failure.**
- **If the remaining oil in the removed compressor and magnetic clutch is too small in volume, check for oil leakage.**
- **Be sure to use ND–OIL8 for compressor oil.**

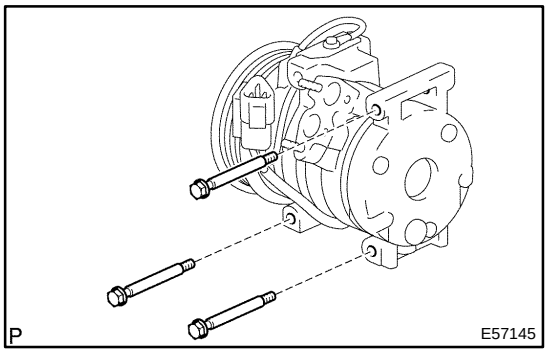

12. TEMPORARY TIGHTEN COMPRESSOR AND MAGNETIC CLUTCH

(a) Temporarily the compressor and magnetic clutch with the 3 bolts.

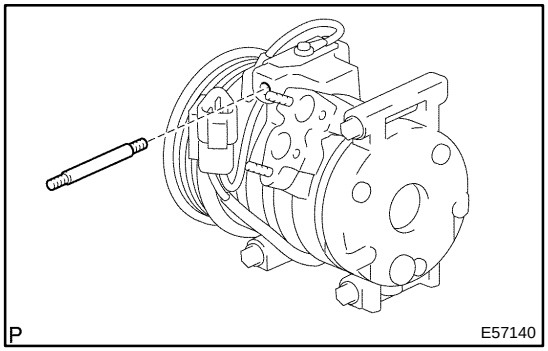

13. FULLY TIGHTEN COMPRESSOR AND MAGNETIC CLUTCH

(a) Using a torque socket wrench (E8), install the bolt.
Torque: 25 N·m (250 kgf·cm, 18 ft·lbf)

(b) Tighten the compressor and magnetic clutch with the 3 bolts and nut.
Torque: 25 N·m (250 kgf·cm, 18 ft·lbf)

(c) Connect the connector.

NOTICE:

Tighten the bolts and nuts in following order shown in the illustration to install the compressor magnetic clutch.

14. INSTALL COOLER REFRIGERANT SUCTION HOSE NO.1

(a) Remove the attached vinyl tape from the hose.

(b) Sufficiently apply compressor oil to the new O–ring and fit surface of the compressor and magnetic clutch.
Compressor oil: ND–OIL 8 or equivalent

(c) Install a O–ring to the cooler refrigerant suction hose No. 1.

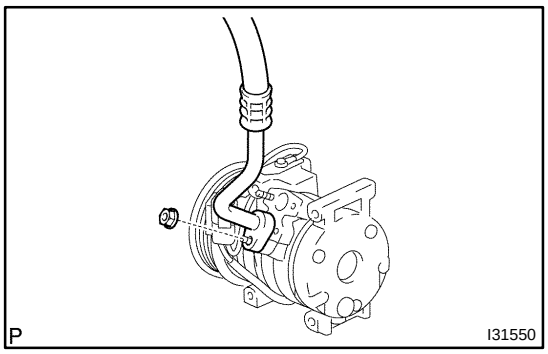

(d) Install the cooler refrigerant suction hose No. 1 to the compressor and magnetic clutch with the nut .
Torque: 9.8 N·m (100 kgf·cm, 87 in.·lbf)

15. INSTALL COOLER REFRIGERANT DISCHARGE HOSE NO.1

(a) Remove the attached vinyl tape from the hose.
(b) Sufficiently apply compressor oil to the new O–ring and fit surface of the compressor and magnetic clutch.
Compressor oil: ND–OIL 8 or equivalent
(c) Install a O–ring to the cooler refrigerant discharge hose No. 1.

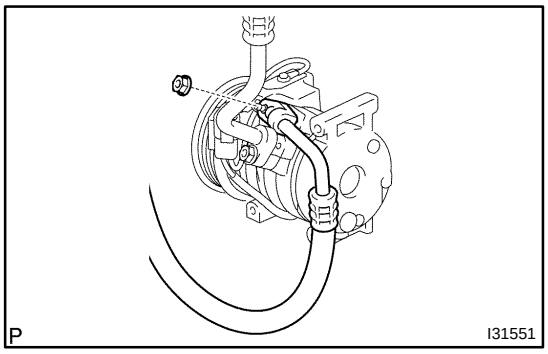

(d) Install the cooler refrigerant discharge hose No. 1 to the compressor and magnetic clutch with the nut.
Torque: 9.8 N·m (100 kgf·cm, 87 in.·lbf)

16. INSTALL GENERATOR ASSY
(See page 19–13)
17. INSTALL FAN AND GENERATOR V BELT
(See page 14–5)
SST 09249–63010
18. CHARGE REFRIGERANT (See page 55–18)
SST 07110–58060 (07117–58060, 07117–58070, 07117–58080, 07117–58090, 07117–78050, 07117–88060, 07117–88070, 07117–88080)
Specified amount: 550 ± 50 g (19.37 ± 1.76 oz.)
19. WARM UP ENGINE
20. INSPECT LEAKAGE OF REFRIGERANT (See page 55–18)

COOLER CONDENSER ASSY

550C8–01

ON–VEHICLE INSPECTION

1. INSPECT COOLER CONDENSER ASSY

(a) If a fin of the cooler condenser assy is dirty, clean it with water and dry it with compressor air.

NOTICE:

Do not damage the fin of the condenser assy.

(b) If a fin of the condenser assy is bent, make it straight using a screwdriver or pliers.

2. INSPECT CONDENSER FOR LEAKAGE OF REFRIGERANT

(a) Using a halogen leak detector, check pipe joints for gas leakage.

(b) If gas leakage is detected in a joint, check the torque of the joint.

550C9–01

COMPONENTS

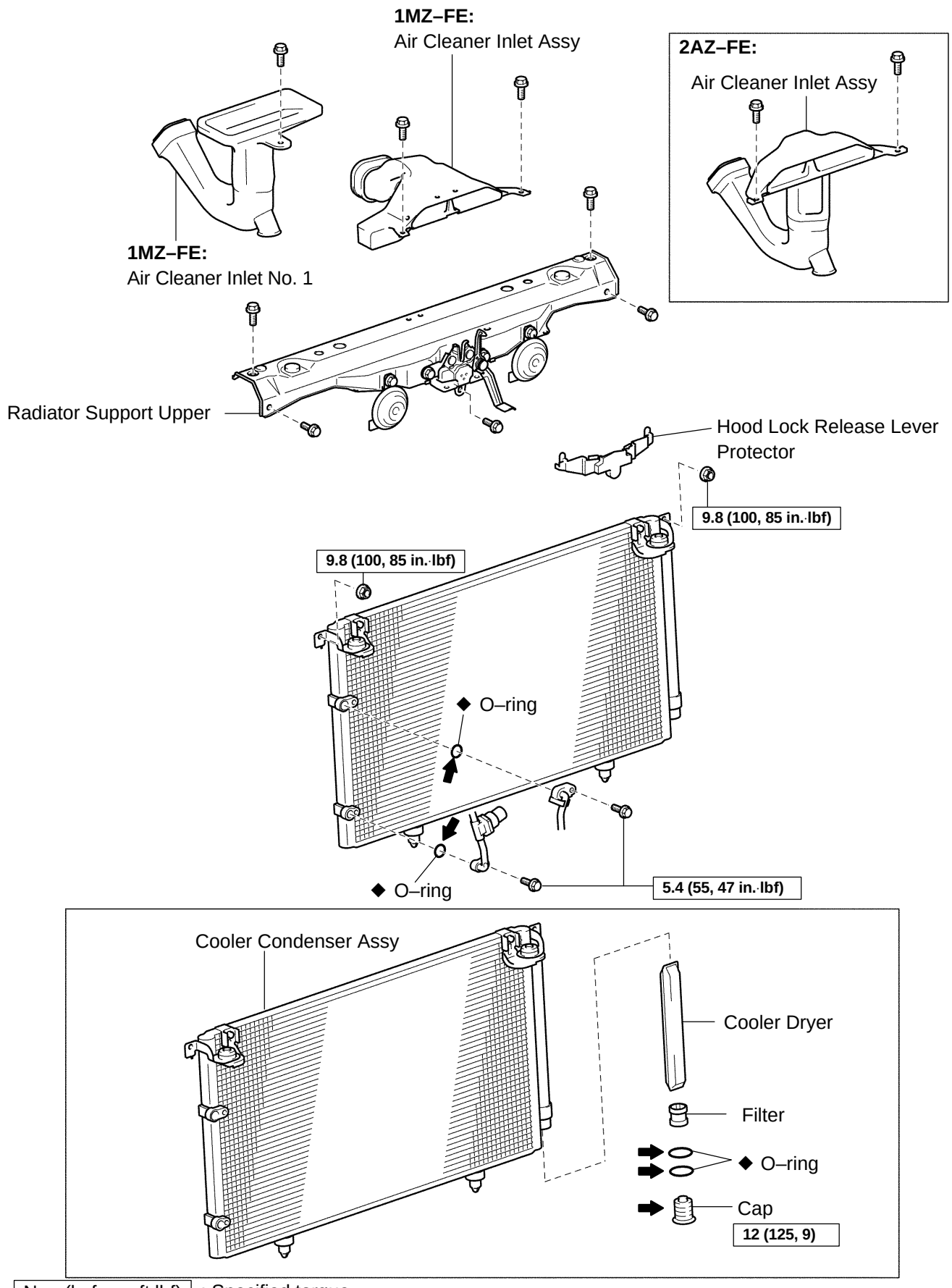

N·m (kgf·cm, ft·lbf) : Specified torque

⬅ Compressor oil ND–OIL 8 or equivalent

◆ Non–reusable parts

I31559

550CA–01

OVERHAUL

HINT:

COMPONENTS: See page 55–64

1. DISCHARGE REFRIGERANT FROM REFRIGERATION SYSTEM (See page 55–18)

SST 07110–58060 (07117–58080, 07117–58090, 07117–78050, 07117–88060, 07117–88070, 07117–88080)

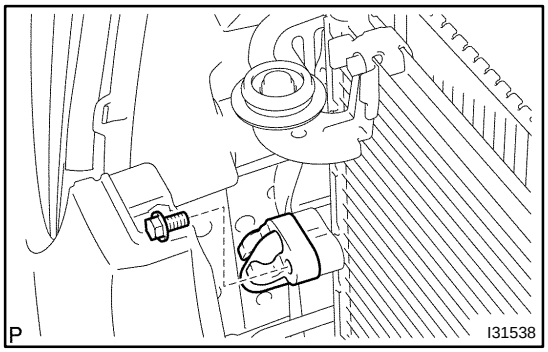

2. REMOVE COOLER REFRIGERANT DISCHARGE HOSE NO.1

(a) Remove the bolt and disconnect the cooler refrigerant discharge hose No. 1 from the cooler condenser assy.

(b) Remove the O–ring from the cooler refrigerant discharge hose No. 1.

NOTICE:

Seat the opening of the disconnected parts using vinyl tape to prevent moisture and foreign matter from entering.

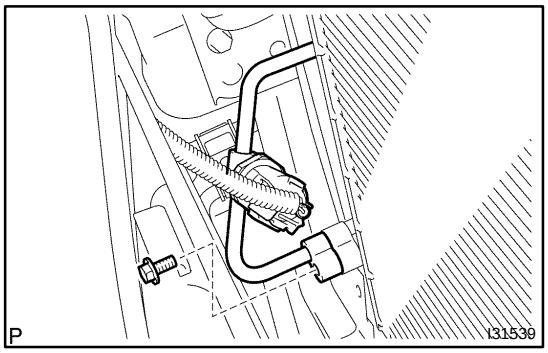

3. DISCONNECT COOLER REFRIGERANT LIQUID PIPE A

(a) Remove the bolt and disconnect the cooler refrigerant liquid pipe A from the cooler condenser assy.

(b) Remove the O–ring from the cooler refrigerant liquid pipe A.

NOTICE:

Seal the opening of the disconnected parts using vinyl tape to prevent moisture and foreign matter from entering.

4. REMOVE AIR CLEANER INLET ASSY

1MZ–FE: (See page 16–26)

2AZ–FE: (See page 16–12)

5. REMOVE RADIATOR SUPPORT UPPER

1MZ–FE: (See page 16–26)

2AZ–FE: (See page 16–12)

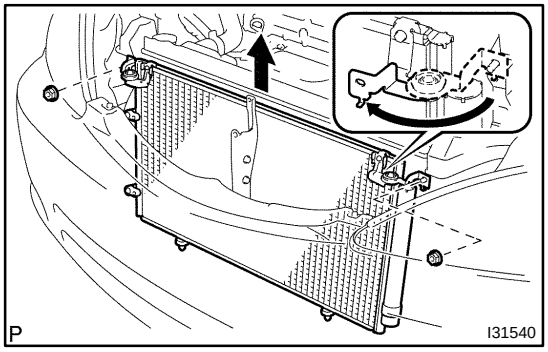

6. REMOVE COOLER CONDENSER ASSY

(a) Remove the 2 nuts and cooler condenser assy.

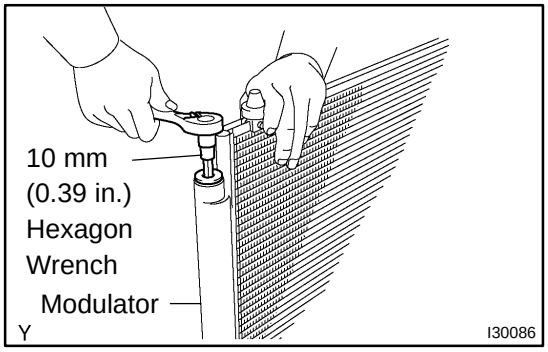

7. REMOVE COOLER DRYER

(a) Using hexagon wrench 10 mm (0.39 in.), remove the cap and filter from the modulator.

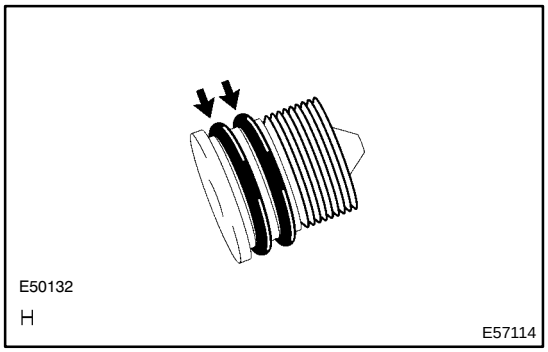

(b) Remove the 2 O–rings from the cap.

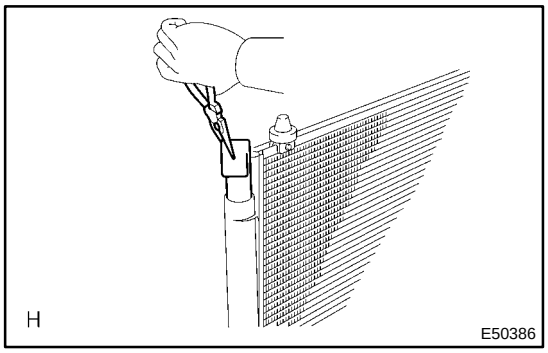

(c) Using a needle nose pliers, remove the cooler dryer.

8. INSTALL COOLER DRYER

(a) Using a needle nose pliers, install the cooler dryer.

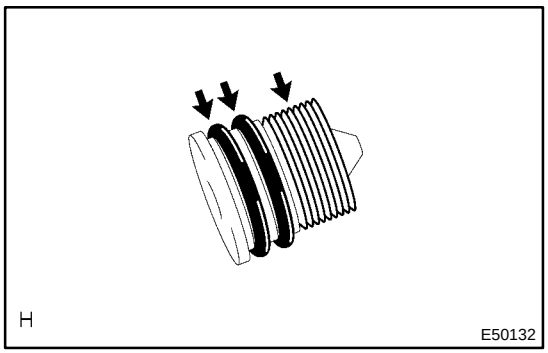

(b) Install 2 new O–rings to the cap.
(c) Sufficiently apply compressor oil to the fit surfaces of the O–ring and the cap.
Compressor oil: ND–OIL 8 or equivalent

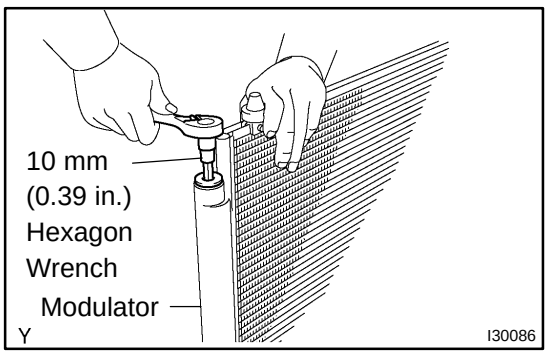

(d) Using hexagon wrench 10 mm (0.39 in.), install the cap to the cooler condenser assy.
Torque: 12 N·m (125 kgf·cm, 9 ft·lbf)

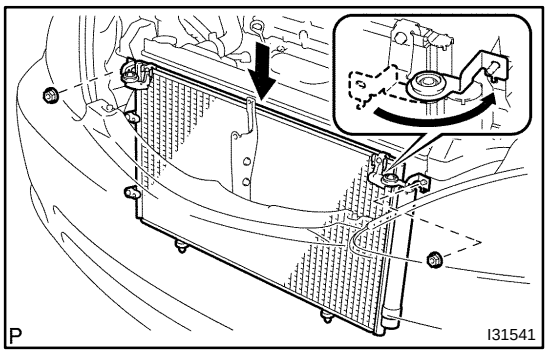

9. INSTALL COOLER CONDENSER ASSY

(a) Install the cooler condenser assy with the 2 nuts.
Torque: 9.8 N·m (100 kgf·cm, 85 in.·lbf)

10. INSTALL RADIATOR SUPPORT UPPER
1MZ–FE: (See page 16–26)
2AZ–FE: (See page 16–12)

11. INSTALL COOLER REFRIGERANT LIQUID PIPE A

(a) Remove the attached vinyl tape from the tube and connecting part of the cooler condenser assy.
(b) Sufficiently apply compressor oil to the new O–ring and pipe joint.
Compressor oil: ND–OIL 8 or equivalent
(c) Install a O–ring to the cooler refrigerant liquid pipe A.

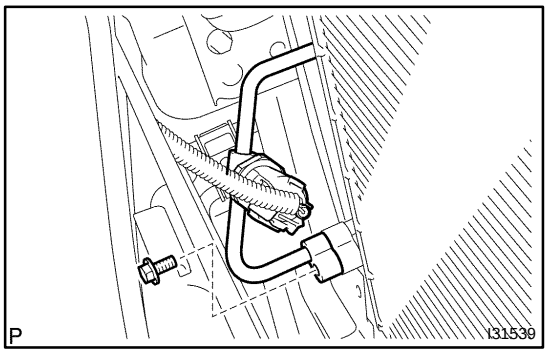

(d) Connect the cooler refrigerant liquid pipe A to the cooler condenser assy with the bolt.
Torque: 5.4 N·m (55 kgf·cm, 47 in.·lbf)

12. INSTALL COOLER REFRIGERANT DISCHARGE HOSE NO.1

(a) Remove the attached vinyl tape from the tube and connecting part of the cooler condenser assy.
(b) Sufficiently apply compressor oil to the new O–ring and hose joint.
Compressor oil: ND–OIL 8 or equivalent
(c) Install a O–ring to the cooler refrigerant discharge hose No. 1.

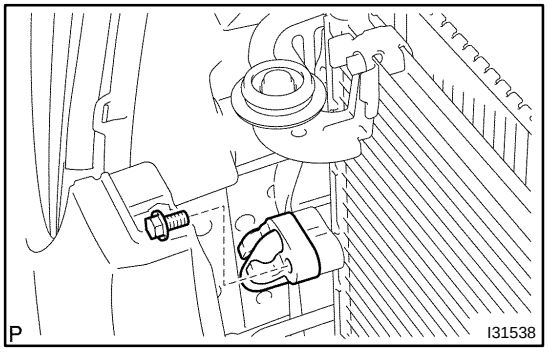

(d) Connect the cooler refrigerant discharge hose No. 1 to the cooler condenser assy with the bolt.
Torque: 5.4 N·m (55 kgf·cm, 47 in.·lbf)

13. CHARGE REFRIGERANT (See page 55–18)

SST 07110–58060 (07117–58060, 07117–58070, 07117–58080, 07117–58090, 07117–78050, 07117–88060, 07117–88070, 07117–88080)

Specified amount: 550 ± 50 g (19.37 ± 1.76 oz.)

14. WARM UP ENGINE

15. INSPECT LEAKAGE OF REFRIGERANT (See page 55–18)

AIR CONDITIONING SYSTEM

PRECAUTION

550BL–01

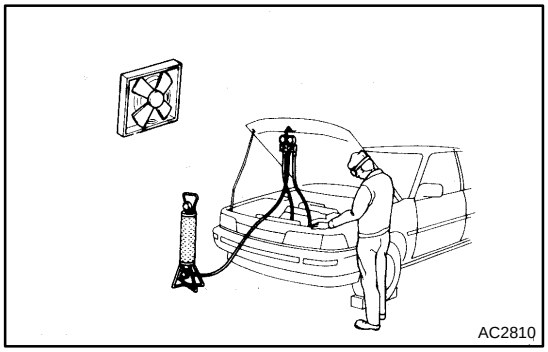

1. DO NOT HANDLE REFRIGERANT IN AN ENCLOSED AREA OR NEAR AN OPEN FLAME

2. ALWAYS WEAR EYE PROTECTION

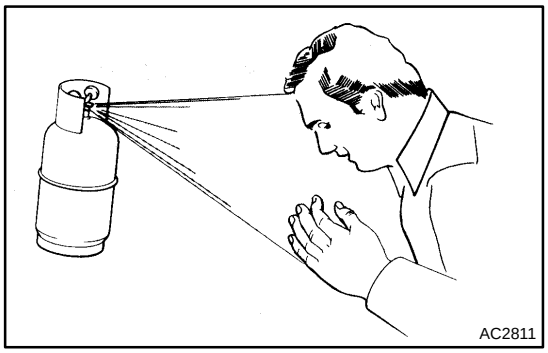

3. BE CAREFUL NOT TO GET LIQUID REFRIGERANT IN YOUR EYES OR ON YOUR SKIN

If liquid refrigerant gets in your eyes or on your skin.

(a) Wash the area with lots of cool water.

CAUTION:

Do not rub your eyes or skin.

(b) Apply clean petroleum jelly to the skin.

(c) Go immediately to a physician or hospital for professional treatment.

4. NEVER HEAT CONTAINER OR EXPOSE IT TO NAKED FLAME

5. BE CAREFUL NOT TO DROP CONTAINER AND NOT TO APPLY PHYSICAL SHOCKS TO IT

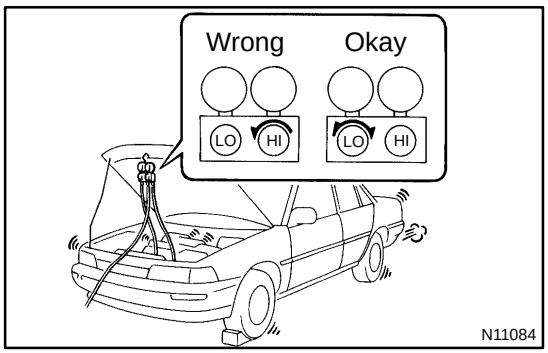

6. DO NOT OPERATE COMPRESSOR WITHOUT ENOUGH REFRIGERANT IN REFRIGERANT SYSTEM

If there is not enough refrigerant in the refrigerant system oil lubrication will be insufficient and compressor burnout may occur, so take care to avoid this, necessary care should be taken.

7. DO NOT OPEN HIGH PRESSURE MANIFOLD VALVE WHILE COMPRESSOR IS OPERATING

If the high pressure valves opened, refrigerant flows in the reverse direction and could cause the charging cylinder to rupture, so open and close the only low pressure valve.

8. BE CAREFUL NOT TO OVERCHARGE SYSTEM WITH REFRIGERANT

If refrigerant is overcharged, it causes problems such as insufficient cooling, poor fuel economy, engine overheating etc.

550BM–01

PROBLEM SYMPTOMS TABLE

Use the table below to help you find the cause of the problem. The numbers indicate the priority of the likely cause of the problem. Check each part in order. If necessary, replace these parts.

Symptom	Suspect Area	See page
Whole functions of the A/C system does not operate.	1. HTR fuse (50 A) 2. HTR fuse (10 A) 3. A/C control assy 4. Wire harness or connector	– – 55–3 –
Air Flow Control : No blower operation	1. Heater Blower motor relay 2. Blower w/ fan motor sub–assy 3. A/C cotrol assy 4. Wire harness or connector	55–7 55–7 55–3 –
Air Flow Control : No blower control	1. Blower w/ fan motor sub–assy 2. Blower resistor 3. A/C control assy 4. Wire harness or connector	55–7 55–7 55–3 –
Air Flow Control : Insufficient air out	1. Blower w/ fan motor sub–assy 2. A/C cotrol assy 3. Wire harness or connector	55–7 55–3 –
Temperature Control : No cool air comes out	1. Volume of refrigerant 2. Drive belt tension 3. Refrigerant pressure 4. Cooler compressor assy 5. Pressure switch No. 1 6. Air mix damper servo sub–assy 7. Condenser fan 8. A/C cotrol assy 9. Wire harness or connector	55–12 55–21 55–12 55–7 55–3 55–7 – 55–3 –
Temperature Control : No warm air comes out	1. Engine coolant volume 2. Air mix damper servo sub–assy 3. Cooler thermistor No. 1 4. A/C cotrol assy 5. Heater radiator unit sub–assy 6. Wire harness or connector	– 55–7 55–7 55–3 – –
Temperature Control : Output air is warmer or cooler than the set temperature or response is slow.	1. Air mix damper servo sub–assy 2. A/C control assy 3. Wire harness or connector	55–7 55–3 –
Temperature Control : No temperature control (only Max. cool or Max. warm)	1. Air mix damper servo sub–assy 2. A/C cotrol assy 3. Wire harness or connector	55–7 55–3 –
No air inlet control	1. Blower damper servo sub–assy 2. A/C cotrol assy 3. Wire harness or connector	55–7 55–3 –
No air outlet control	1. Mode damper servo sub–assy 2. A/C cotrol assy 3. Wire harness or connector	55–7 55–3 –
No engine idle–up when A/C switch ON	1. Cooler compressor assy 2. A/C cotrol assy 3. ECM 4. Wire harness or connector	55–7 55–3 – –
Brightness does not changes when rheostat volume or light control switch it turned.	1. Illumination light system 2. A/C cotrol assy 3. Wire harness or connector	– 55–3 –

ON–VEHICLE INSPECTION

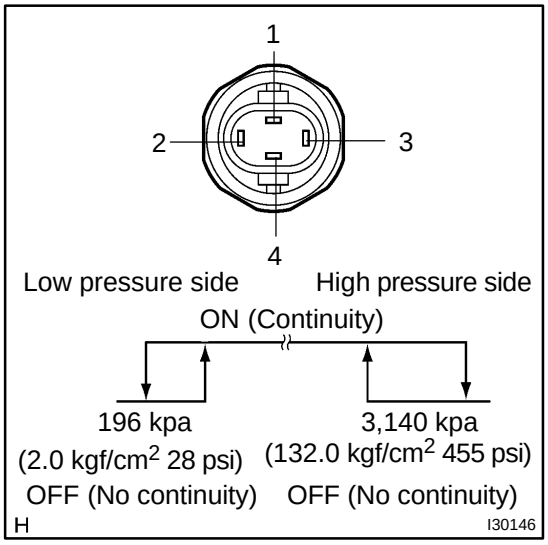

1. INSPECT PRESSURE SWITCH NO.1.

(a) Magnetic clutch control:

Inspect pressure switch operation.

(1) Set on the manifold gauge set.

(2) Connect the positive (+) lead from the ohmmeter to terminal 4 and the negative (–) lead to terminal 1.

(3) Check continuity between terminals when refrigerant pressure is changed, as shown in the illustration.

If operation is not as specified, replace the pressure switch.

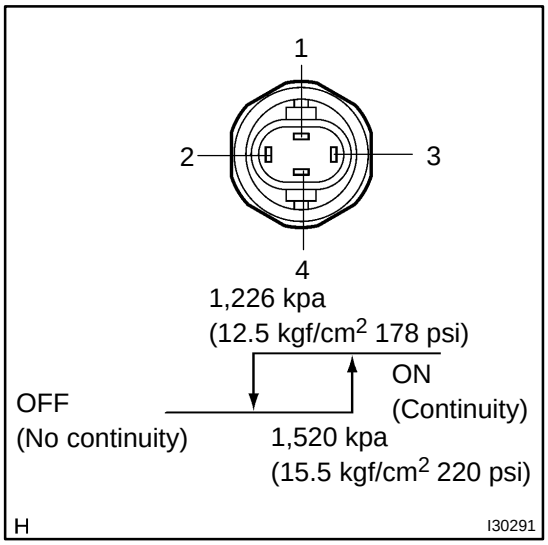

(b) Cooling fan control:

Inspect pressure switch operation.

(1) Connect the positive (+) lead from the ohmmeter to terminal 2 and the negative (–) lead to terminal 3.

(2) Check continuity between terminals when refrigerant pressure is changed, as shown in the illustration.

If operation is not as specified, replace the pressure switch.

2. INSPECT AIR CONDITIONING CONTROL ASSY

(a) Disconnect the connector from controller and inspect the connector on wire harness side, as shown in the chart.

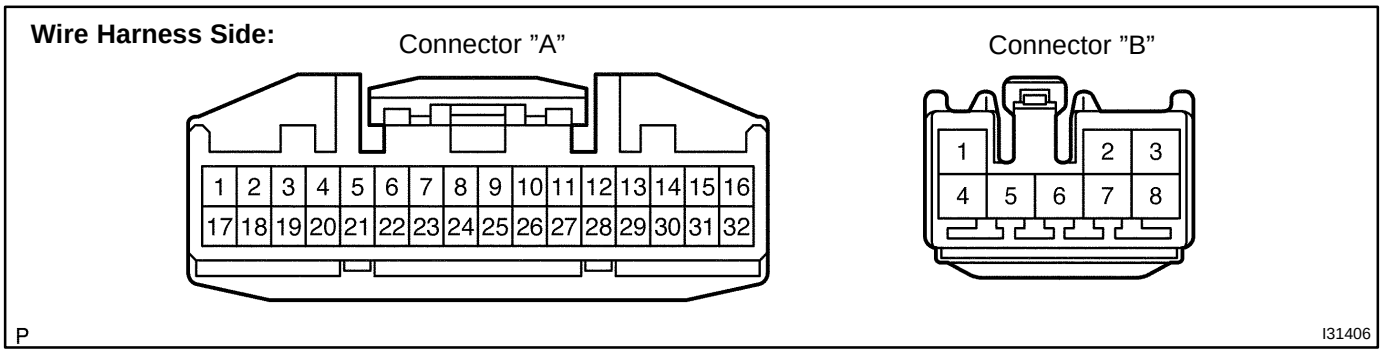

Symbols (Terminal No.)	Condition	Specified condition
+B ⇔ GND (A1 ⇔ A32)	Always	10 – 14 V
IG ⇔ GND (A2 ⇔ A32)	Ignition switch: ON	0 → 10 – 14 V
GND ⇔ Body ground (A32 ⇔ Body ground)	Always	Continuity

If circuit is as specifies, try replacing the controller with a new one. If the circuit is not as specified, inspect the circuits connected to other parts.

(b) Connect the connector to heater controller and inspect wire harness side from the back side, as shown in the chart below.

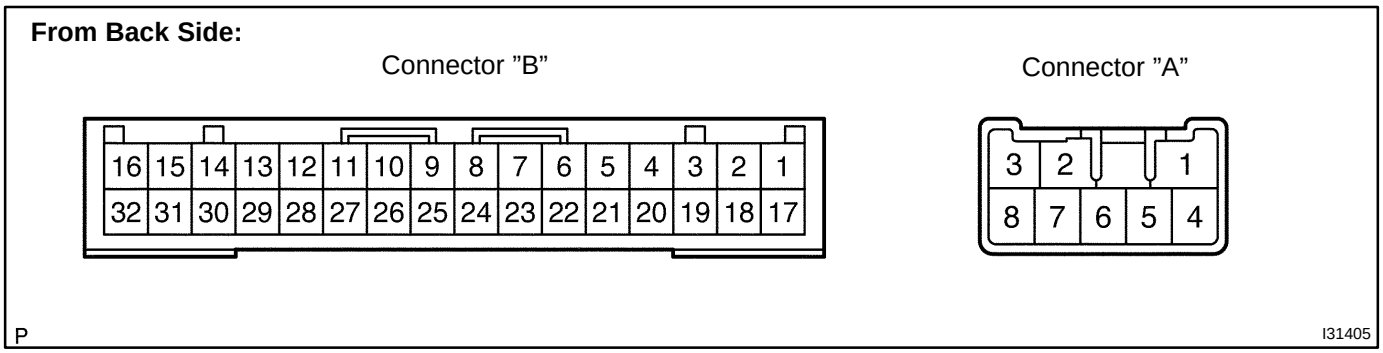

Symbols (Terminal No.)	Condition	Specified condition
E ⇔ Body ground (B1 ⇔ Body ground)	Always	Continuity
LO ⇔ E (B3 ⇔ B1)	Blower switch: OFF → LO	0 → Below 1.0 V
M1 ⇔ E (B5 ⇔ B1)	Ignition switch: ON Blower switch: OFF → M1	0 → Below 1.0 V
M2 ⇔ E1 (B6 ⇔ B1)	Ignition switch: ON Blower switch: OFF → M2	0 → Below 1.0 V
HI ⇔ E1 (B7 ⇔ B1)	Ignition switch: ON Blower switch: OFF → HI	0 → Below 1.0 V
REC ⇔ GND (A10 ⇔ A32)	Ignition switch: ON R/F switch: FRESH → RECIRCULATION	Open → Below 1.0 V
FRS ⇔ GND (A11 ⇔ A32)	Ignition switch: ON R/F switch: RECIRCULATION → FRESH	Open → Below 1.0 V

Symbols (Terminal No.)	Condition	Specified condition
TEST ⇔ SG (A27 ⇔ A30)	Ignition switch: ON Set temp: MAX. HOT → MAX. COLD	Below 1 V → Above 4 V
A/C ⇔ GND (A12 ⇔ A32)	Ignition switch: ON Blower switch: ON (Lo, M1, M2, Hi) A/C switch:OFF → ON	Below 2 V → Above 6 V
A/CB ⇔ GND (A4 ⇔ A32)	Ignition switch: ON Blower switch:OFF → ON (Lo, M1, M2, Hi)	0 → 10 – 14 V
ACID ⇔ GND (A13 ⇔ A32)	Ignition switch: ON Blower switch: ON (Lo, M1, M2, Hi) A/C switch: OFF → ON	Open → Below 1.0 V
S5 ⇔ GND (A25 ⇔ A32)	Ignition switch: LOCK → ON	0 → 5.0 V
SG ⇔ Body ground (A30 ⇔ Body ground)	Always	Continuity
TCOL ⇔ GND (A7 ⇔ A32)	Ignition switch: ON Set temp.: MAX. HOT → MAX. COLD	Below 1.0 V → 10 – 14 V
THOL ⇔ GND (A8 ⇔ A32)	Ignition switch: ON Set temp.: MAX. COLD → MAX. HOT	Below 1.0 V → 10 – 14 V
FACE ⇔ GND (A21 ⇔ A32)	Ignition switch: ON Mode select: Except FACE → FACE	Below 1.0 V → 0 V
DEF ⇔ GND (A17 ⇔ A32)	Ignition switch: ON Mode select: Except DEF → DEF	Below 1.0 V → 0 V
F/D ⇔ GND (A18 ⇔ A32)	Ignition switch: ON Mode select: Except F/D → F/D	Below 1.0 V → 0 V
FOOT ⇔ GND (A19 ⇔ A32)	Ignition switch: ON Mode select: Except FOOT → FOOT	Below 1.0 V → 0 V
B/L ⇔ GND (A20 ⇔ A32)	Ignition switch: ON Mode select: Except B/L → B/L	Below 1.0 V → 0 V

If circuit is as specified, try replacing the controller with a new one. If the circuit is not as specified, inspect the circuits connected to other parts.

3. INSPECT ECM

From Back Side:

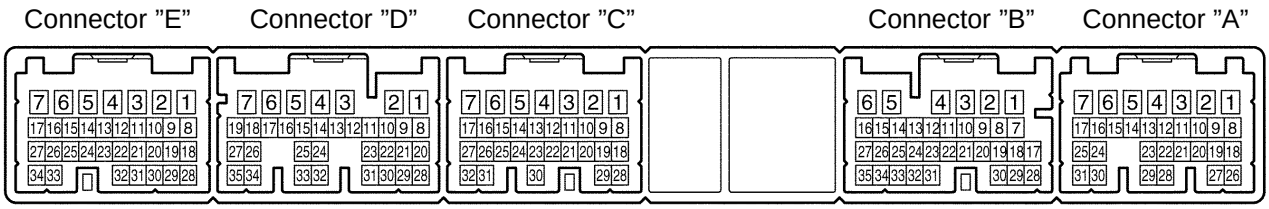

Symbols (Terminal No.)	Condition	Specified condition
PRE ⇔ Body ground (B1 ⇔ Body ground)	Start engine Refrigerant pressure: Normally → Less than 0.19 Mpa (2.0 kgf·cm2, 28 psi) or more than 1.34 Mpa (32 kgf·cm22, 2,455 psi)	0 → Below 1.0 V
A/CS ⇔ Body ground (B31 ⇔ Body ground)	Ignition switch: ON A/C switch: OFF → ON	0 → Below 1.0 V
THR ⇔ E2 (B32 ⇔ E28)	Evaporator temp.: 0 °C (32 °F) → 15 °C (59 °F)	2.0 – 2.4 → 1.4 – 1.8 V
A/CI ⇔ Body ground (B33 ⇔ Body ground)	Ignition switch: ON Magnetic clutch: OFF → ON	0 → Below 1.0 V

Symbols (Terminal No.)	Condition	Specified condition
LCKI ⇔ Body ground (C23 ⇔ Body ground)	Ignition switch: ON Magnetic clutch: OFF → ON	Pulse generation
E2 ⇔ Body ground (E28 ⇔ Body ground)	Always	Continuity
PR2 ⇔ Body ground*1 (C30 ⇔ Body ground)	Start engine Refrigerant pressure: Normally → Less than 0.19 Mpa (2.0 kgf·cm2, 28 psi) or more than 1.34 Mpa (32 kgf·cm22, 2,455 psi)	0 → Below 1.0 V

*1: 2AZ–FE

If circuit is as specified, try replacing the amplifier with a new one. If the circuit is not as specified, inspect the circuits connected to other parts.

INSPECTION

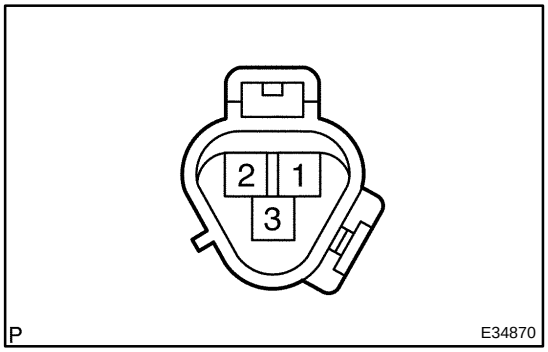

1. COOLER COMPRESSOR ASSY

(a) Connect the positive (+) lead from the battery to terminal 3 and the negative (–) lead to the body ground.

(b) Check that the magnetic clutch energized.

If operation is not as specified, replace the magnet clutch assy.

(c) Measure resistance between terminals 2 and 4.

Standard resistance: 165 – 205 Ω at 20 °C (68 °F)

If resistance is not as specified, replace the cooler compressor assy.

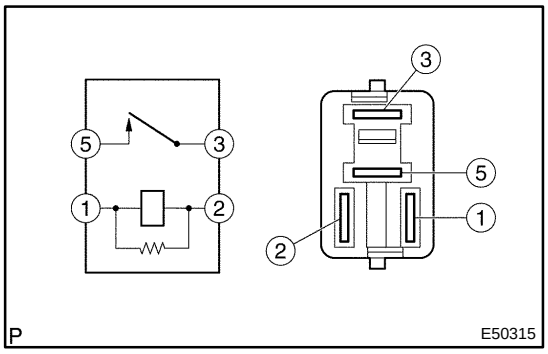

2. MAGNET–CLUTCH RELAY

Condition	Tester connection	Specified condition
Constant	1 – 2	Continuity
Apply B + between terminals 1 and 2.	3 – 5	Continuity

If continuity is not as specified, replace the magnet–clutch relay.

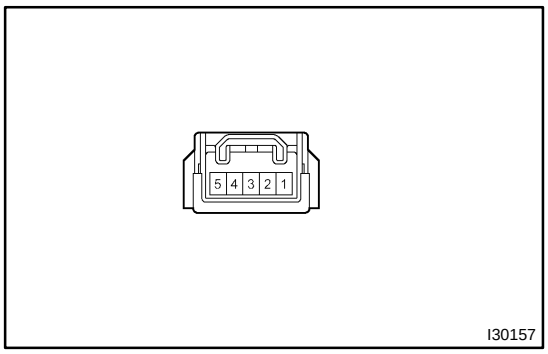

3. AIRMIX DAMPER SERVO SUB–ASSY

(a) Inspect servomotor operation.
  (1) Connect the positive (+) lead from the battery to terminal 4 and negative (–) lead to terminal 5, then check that the arm turns to ”COLD” side smoothly.
  (2) Connect the positive (+) lead from the battery to terminal 5 and negative (–) lead to terminal 4, then check that the arm turns to ”HOT” side smoothly.

If operations are not as specified, replace the air mix servomotor.

(b) Inspect position sensor resistance.
Measure resistance between terminals at servomotor arm each position as shown in the chart.

Tester connection	Condition	Specified condition
1 – 2	Constant	4.2 – 7.8 kΩ
1 – 3	Arm position at ”COLD”	3.4 – 6.2 kΩ
1 – 3	Arm position at ”HOT”	0.8 – 1.6 kΩ

If resistance is not as specified, replace the servomotor.

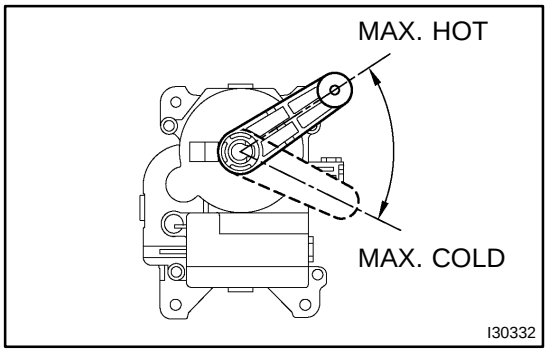

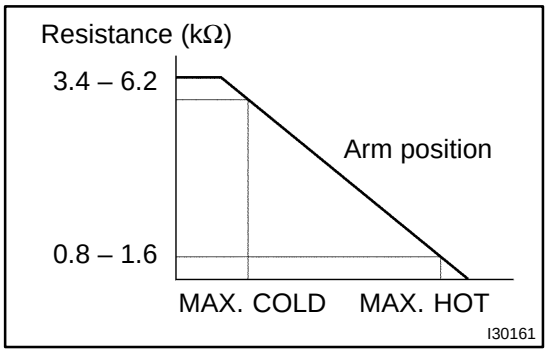

4. MODE DAMPER SERVO SUB–ASSY

(a) Inspect servomotor operation.
(b) Connect the positive (+) lead from the battery to terminal 7 and the negative (–) lead to terminal 8.
(c) Connect the negative (–) lead from the battery to each terminal, as shown in the chart and check that the shaft rotates at each position, as shown in the illustration.

Connected terminal	Position
1	DEF
2	FOOT/DEF
3	FOOT
5	B/L
6	FACE

If operation is not as specified, replace the servomotor.

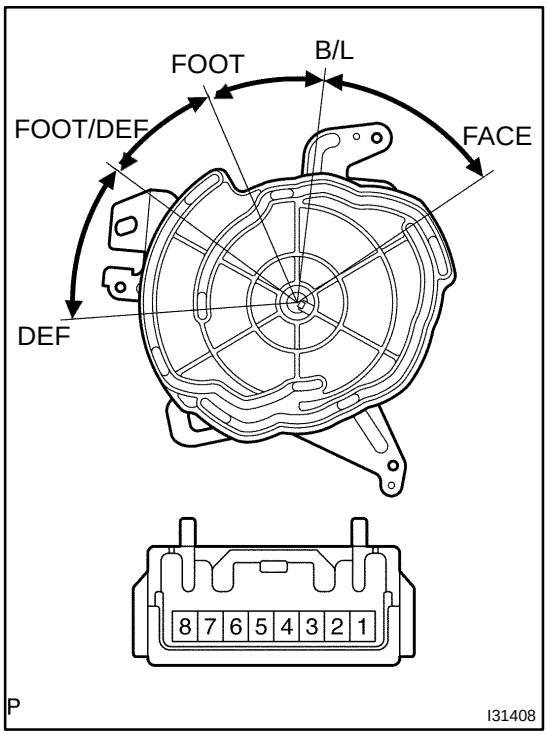

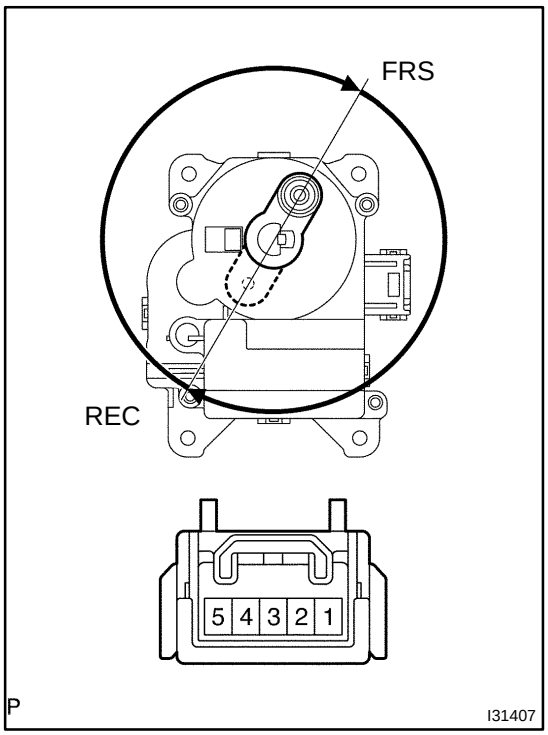

5. RECIRCULATION DAMPER SERVO SUB–ASSY

(a) Inspect servomotor operation.
   (1) Connect the positive (+) lead from the battery to terminal 5 and negative (–) lead to terminal 1, then check that the arm turns to ”REC” side smoothly.
   (2) Connect the positive (+) lead from the battery to terminal 5 and negative (–) lead to terminal 2, then check that the arm turns to ”FRS” side smoothly.

If operations are not as specified, replace the mode damper servomotor.

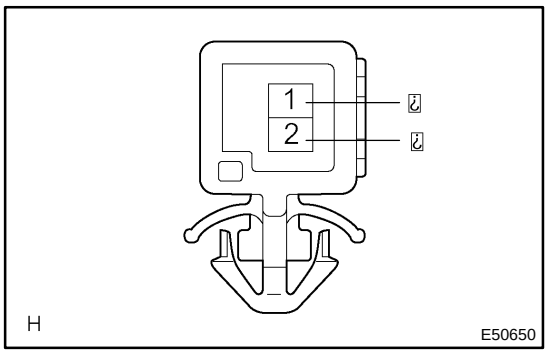

6. COOLER THERMISTOR NO.1

(a) Check resistance between terminals 1 and 2 of Cooler thermistor No. 1 at each temperature, as shown in the chart.

Resistance:

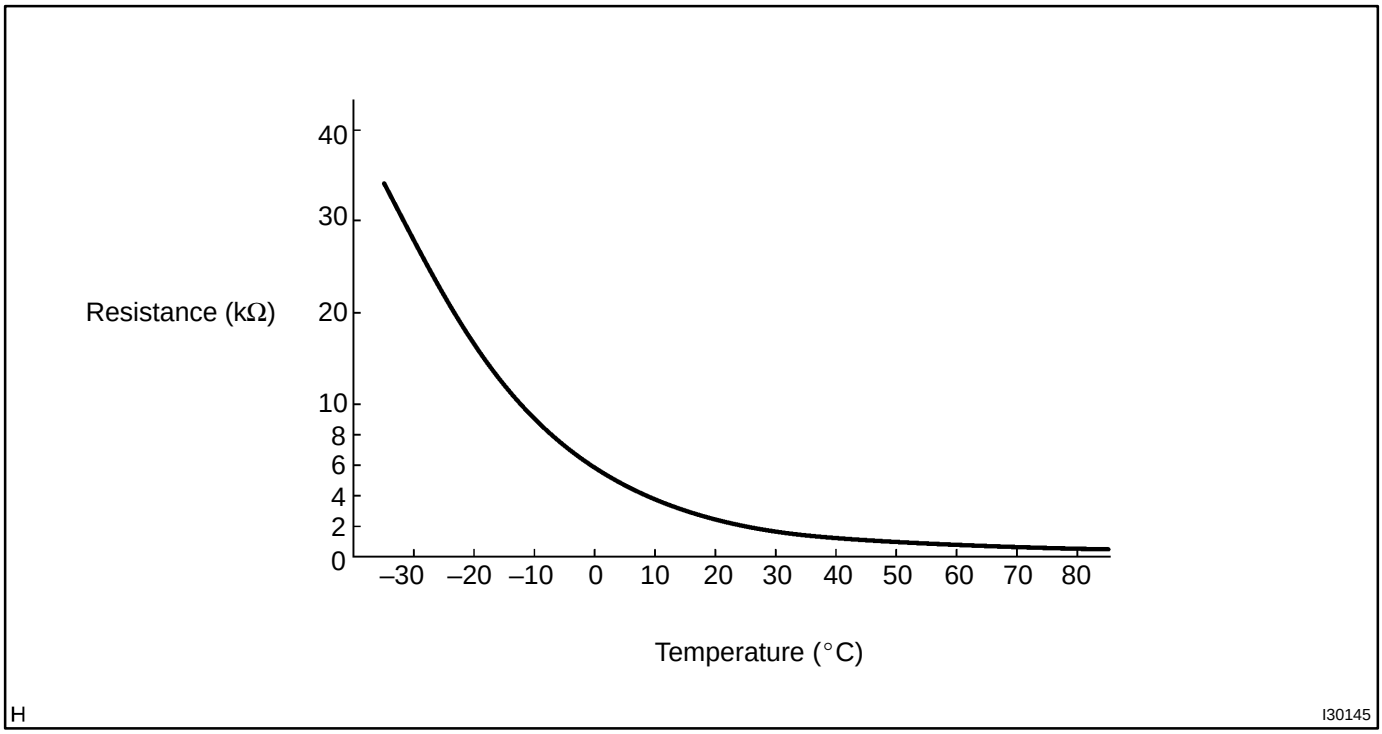

If resistance value is not as specified, replace the sensor.

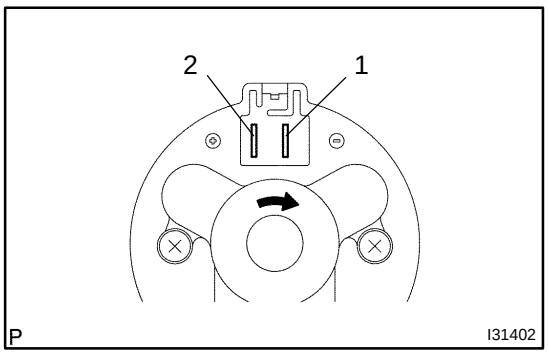

7. BLOWER W/FAN MOTOR SUB–ASSY

(a) Connect the positive (+) lead from the battery to terminal 2 and negative (–) to terminal 1, then check that the motor operation smoothly.

If operation is not as specified, replace the blower motor.

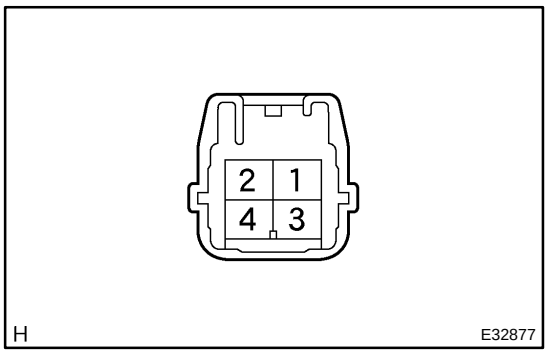

8. BLOWER RESISTOR

(a) Measure resistance between terminals, as shown in the chart below.

Tester connection	Specified condition
1 – 2	1.398 – 1.605 Ω
1 – 3	0.465 – 0.535 Ω
1 – 4	3.069 – 3.531 Ω

If resistance is not as specified, replace the blower resistor.

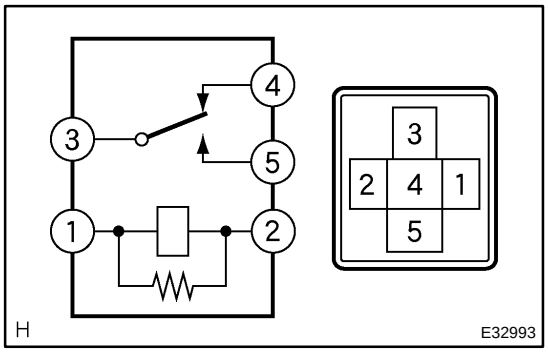

9. HEATER BLOWER MOTOR RELAY ASSY

Condition	Tester connection	Specified condition
Constant	1 – 2 3 – 4	Continuity
Apply B + between terminals 1 and 2.	3 – 5	Continuity

If continuity is not as specified, replace the heater blower motor relay.

REFRIGERANT

ON–VEHICLE INSPECTION

550BS–01

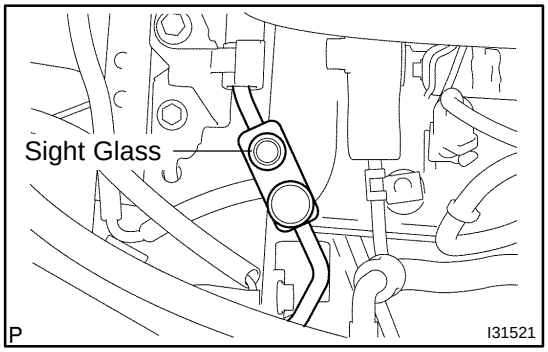

1. INSPECT REFRIGERANT VOLUME

(a) Observe the sight glass on the cooler refrigerant liquid pipe A.

Test conditions:

- Running engine at 1,500 rpm
- Blower speed control switch at ”HI”
- A/C switch ON
- Temperature control dial at ”MAX. COOL”
- Fully open the doors

Item	Symptom	Amount of refrigerant	Corrective Actions
1	Bubbles present	Insufficient*	(1) Check for gas leakage and repair if necessary (2) Add refrigerant until bubbles disappear
2	No bubbles present	None, insufficient or too much	Refer 3 and 4
3	No temperature difference between compressor inlet and outlet	Empty or nearly empty	(1) Check for gas leakage with gas leak detector and repair if necessary (2) Add refrigerant until bubbles disappear
4	Considerable temperature difference between compressor inlet and outlet.	Correct or too much	Refer to 5 and 6
5	Immediately after air conditioning is turned off, refrigerant clear	Too much	(1) Discharge refrigerant (2) Remove air and supply proper amount or purified refrigerant
6	Immediately after air conditioning is turned off, refrigerant foams and then becomes clear	Correct	–

*: Bubbles in the sight glass with ambient temperatures higher than usual can be considered normal if cooling is sufficient.

2. INSPECT REFRIGERANT PRESSURE WITH MANIFOLD GAUGE SET

(a) This is a method in witch the trouble is located by using a manifold gauge set. Read the manifold gauge pressure when the these conditions are established.

Test conditions:

- Temperature at the air inlet with the switch set at RECIRC is 30 – 35 °C (86 – 95 °F)
- Engine running at 1,500 rpm
- Blower speed control switch at "HI" position
- Temperature control dial at "COOL" position
- A/C switch ON
- Fully open doors

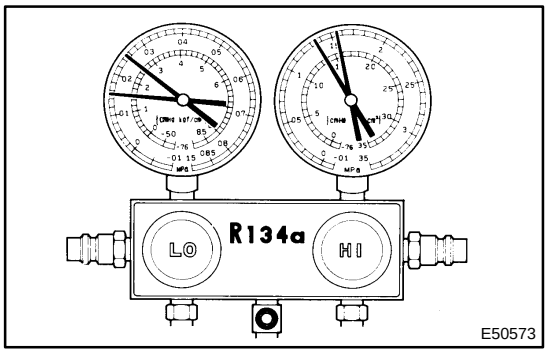

E50573

(1) Normally functioning refrigeration system.

Gauge reading:
Low pressure side:
0.15 – 0.25 MPa (1.5 – 2.5 kgf/cm^2)
High pressure side:
1.37 – 1.57 MPa (14 – 16 kgf/cm$^{2)}$

(2) Moisture present in refrigeration system.

Condition : Periodically cools and then fails to cool

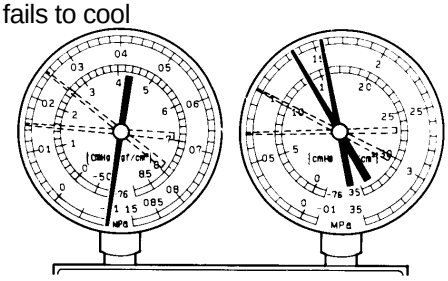
I22117

Symptom	Probable cause	Diagnosis	Remedy
During operation, pressure on low pressure side sometimes become a vacuum and sometime normal	Moisture in refrigerating system freezes at expansion valve orifice causing a temporary stop of cycle, however, when it melts, normal state is restored.	• Drier in oversaturected state • Moisture in refrigerating system freezes at expansion valve orifice and blocks circulation of refrigerant	(1) Replace condenser (2) Remove moisture in cycle by repeatedly evacuating air (3) Supply proper amount of new refrigerant

(3) Insufficient cooling

Condition: Cooling system does not function eftectively.

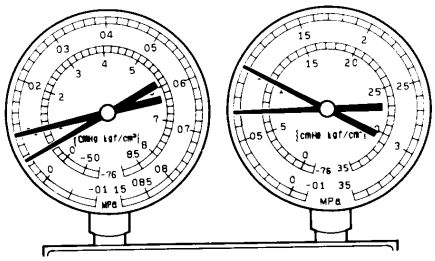

I22118

Symptom	Probable cause	Diagnosis	Corrective Actions
• Pressure low on both low and high pressure sides • Bubbles seen thought sight glass continuously • Insufficient cooling performance	Gas leakage in refrigeration system	• Insufficient refrigerant • Refrigerant leaking	(1) Check for gas leakage and repair if necessary (2) Supply proper amount of new refrigerant (3) If indicated pressure value is close to a 0 when connected to gauge, create the vacuum after inspecting and repairing location of leak

(4) Poor circulation of refrigerant

Condition: Cooling system close not function effectively.

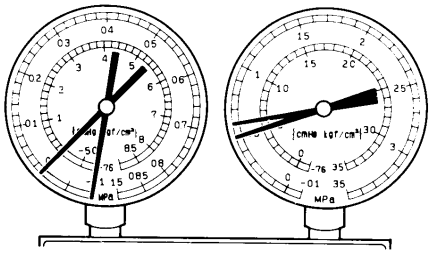

I22119

Symptom	Probable cause	Diagnosis	Corrective Action
• Pressure low on both low and high pressure sides • Frost on pipe from condenser to unit	Refrigerant flow obstructed by dirt in receiver	Receiver clogged	Replace condenser

(5) Refrigerant does not circulate

Condition: Cooling system does not function. (Sometimes it way function)

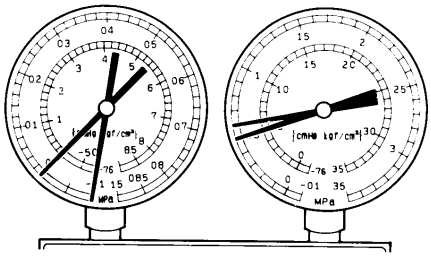

I22120

Symptom	Probable cause	Diagnosis	Corrective Actions
• Vacuum indicated on low pressure side, very low pressure indicated on high pressure side • Frost or dew seen on piping before and after receiver/ drier or expansion valve	• Refrigerant flow obstructed by moisture or dirt in refrigerating system • Refrigerant flow obstructed by gas leaked from expansion valve	Refrigerant does not circulate	(1) Check expansion valve (2) Clean out dirt in expansion valve by air blowing (3) Replace condenser (4) Evaporate air and supply proper amount of new refrigerant. (5) For gas leakage from expansion valve, replace expansion valve

(6) Refrigerant overcharged or insufficient cooling of condenser

Condition: Cooling system does not function dftectively.

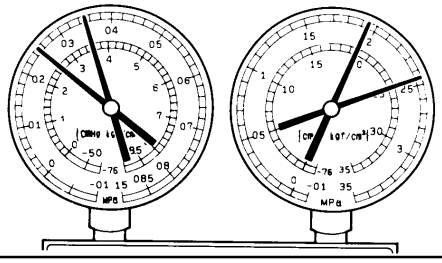

I22121

Symptom	Probable cause	Diagnosis	Remedy
• Pressure too high on both low and high pressure sides • No sir bubbles seen through the sight glass even when the engine rpm is lowered	• Unable to develop sufficient performance due to excessive use of refrigerating system • Insufficient cooling of condenser	• Excessive refrigerant in cycle→too much refrigerant supplied • Condenser cooling insufficient→condenser fins clogged at cooling fan	(1) Clean condenser (2) Check cooling fan with cooling fan motor operation (3) If (1) and (2) are in normal state, check amount of refrigerant and supply proper amount of refrigerant

(7) Air present in refrigeration system

Condition: Cooling system does not function.

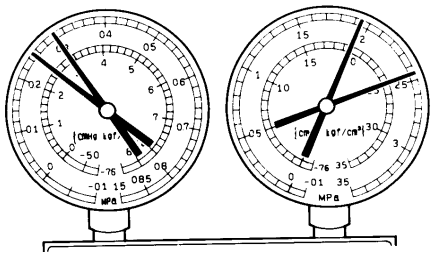

NOTE : These gauge indications are shown when the refrigerating system has been opens and the refrigerant charged without vacuum purging.

I22122

Symptom	Probable cause	Diagnosis	Corrective Actions
• Pressure too high on both low and high pressure sides • The low pressure piping too hot to the touch • Bubbles seen through sight glass	Air entered in refrigerating system	• Air present in refrigerating system • Insufficient vacuum purging	(1) Check compressor oil to see if it is see if it is dirty or insufficient (2) Evacuate air and supply new refrigerant

(8) Expansion valve improperly

Condition: Refrigerant functions insufficient.

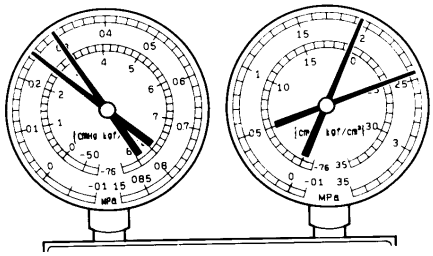

I22123

Symptom	Probable cause	Diagnosis	Corrective Actions
• Pressure too high on both low and high pressure sides • Frost or large amount of dew on piping on low pressure side	Trouble in expansion valve	• Excessive refrigerant in low pressure piping • Expansion valve opened too wide	Check expansion valve

(9) Defective compression compressor

Condition : Refrigerant is not effective.

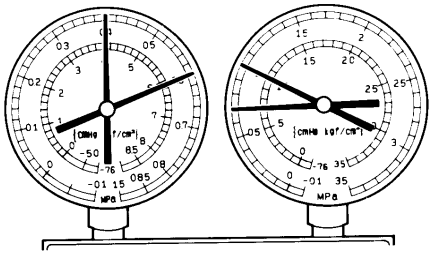

I22124

Symptom	Probable cause	Diagnosis	Corrective Actions
• Pressure too high on low high pressure sides • Pressure too low to on high pressure side	Internal leak in compressor	• Compression failure • Leakage from valve damaged or broken sliding parts	Repair or replace compressor

Gauge readings (Reference)

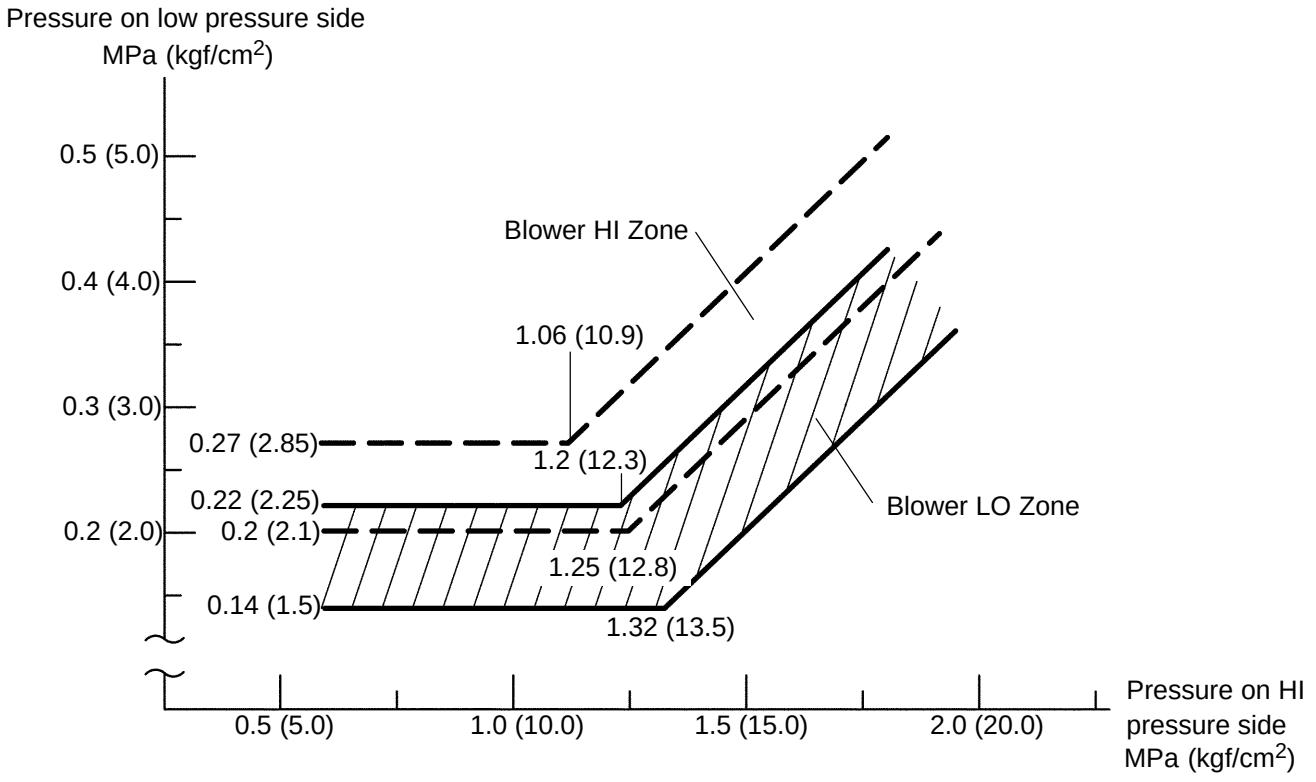

I30081

550BT–01

REPLACEMENT

1. DISCHARGE REFRIGERANT FROM REFRIGERATION SYSTEM

(a) Turn the A/C switch ON.

(b) Operating the cooler compressor at the engine rpm of approx. 1,000 for 5 to 6 min., circulate the refrigerant and collect compressor oil remaining in each component into the cooler compressor as much as possible.

(c) Stop the engine.

(d) Let the refrigerant gas out.

SST 07110–58060 (07117–58080, 07117–58090, 07117–78050, 07117–88060, 07117–88070, 07117–88080)

2. CHARGE REFRIGERANT

(a) Using a vacuum pump, perform a vacuum purping.

(b) Charge refrigerant, HFC–134a (R134a).

Standard: 550 ± 50 g (19.37 ± 1. 76 oz.)

SST 07110–58060 (07117–58060, 07117–58070, 07117–58080, 07117–58090, 07117–78050, 07117–88060, 07117–88070, 07117–88080)

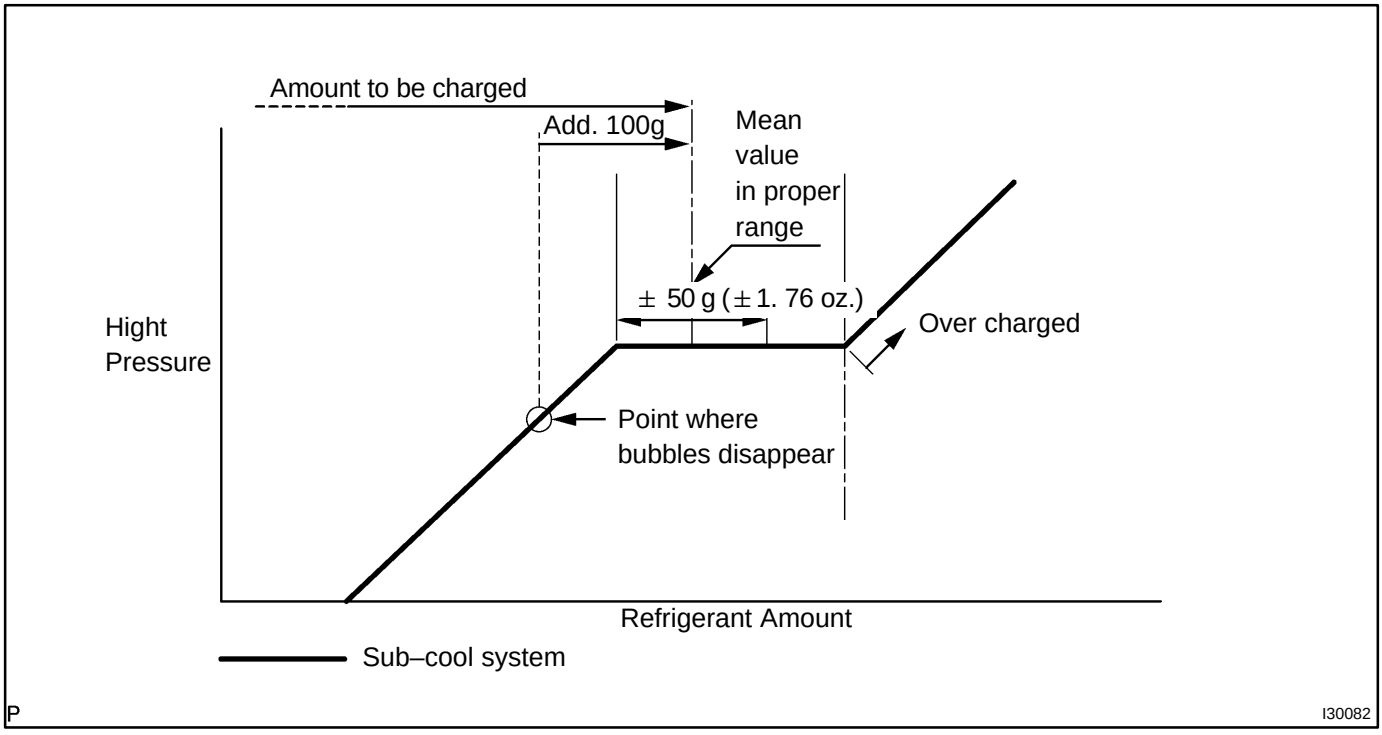

3. WARM UP ENGINE

4. INSPECT LEAKAGE OF REFRIGERANT

REFRIGERANT LINE

COMPONENTS

550BX–01

1MZ–FE:

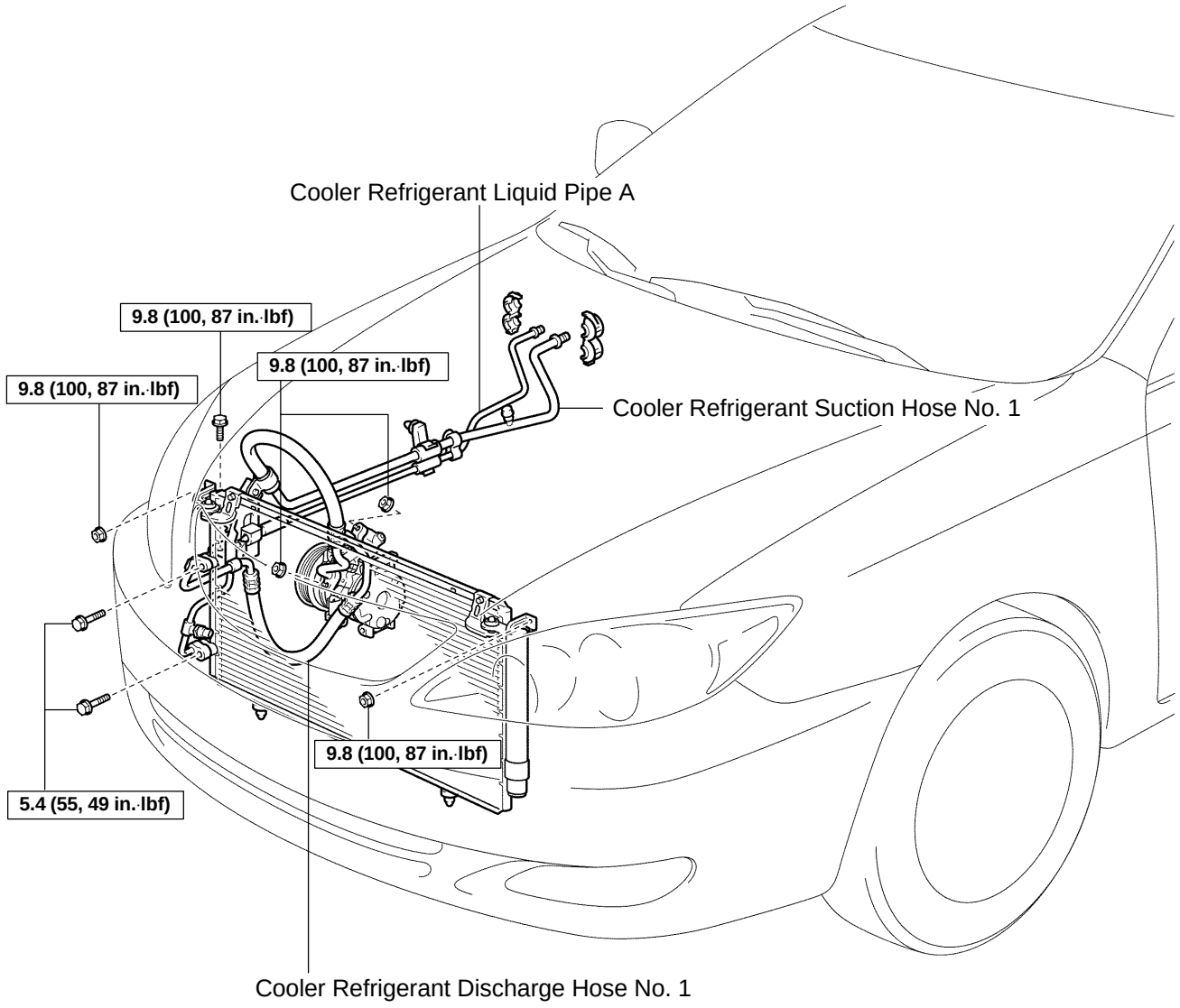

N·m (kgf·cm, ft·lbf) : Specified torque

P

I31330

2AZ–FE:

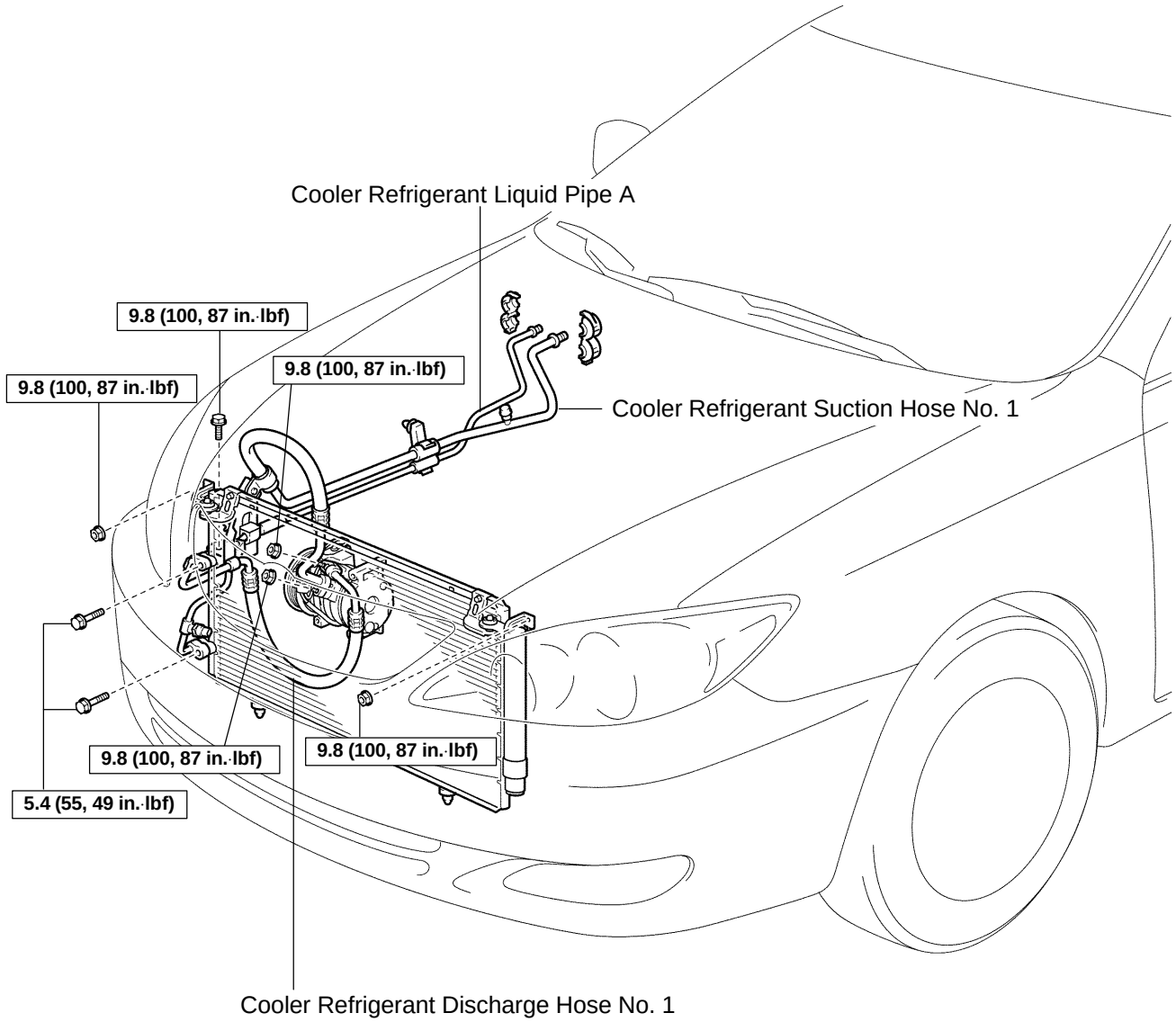

N·m (kgf·cm, ft·lbf) : Specified torque

P

I31331

V (COOLER COMPRESSOR TO CRANKSHAFT PULLEY) BELT NO.1

550BU–01

REPLACEMENT

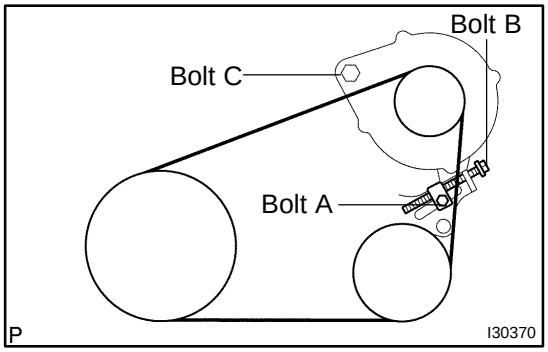

1. REMOVE V (COOLER COMPRESSOR TO CRANKSHAFT PULLEY) BELT NO.1

(a) Loosen the bolt C.
(b) Loosen the bolt A.
(c) Loosen the bolt B and remove the cooler V belt No. 1.

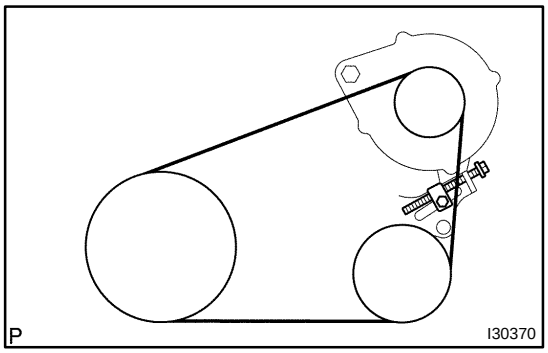

2. INSTALL V (COOLER COMPRESSOR TO CRANKSHAFT PULLEY) BELT NO.1

(a) Temporarily install the cooler V belt No. 1 as illustrated.

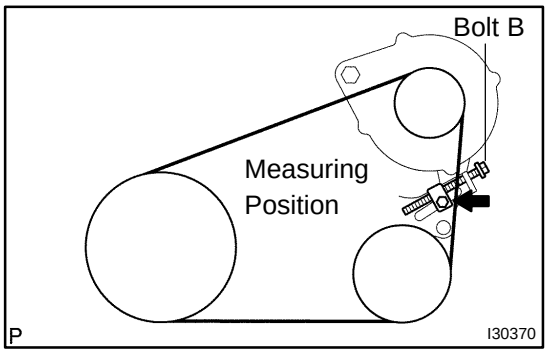

3. ADJUST V (COOLER COMPRESSOR TO CRANKSHAFT PULLEY) BELT NO.1

(a) Apply drive belt tension by turning the bolt B.
Drive belt tension:
New Belt: 165 ± 27 lbf
Used belt: 88 ± 22 lbf

HINT:

- ”New belt” refers to a belt which has been used less than 5 minutes on a running engine.
- ”Used belt” refers to a belt which has been used on a running engine for 5 minutes or more.
- After installing the drive belt, check that it fits properly in the ribbed grooves.

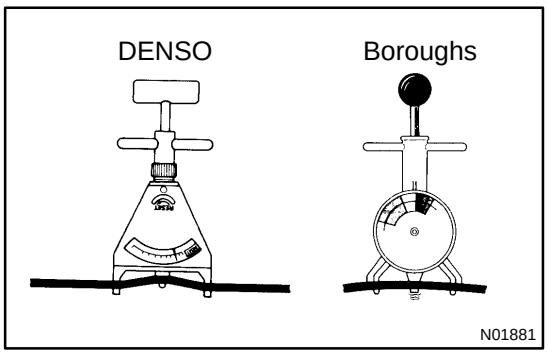

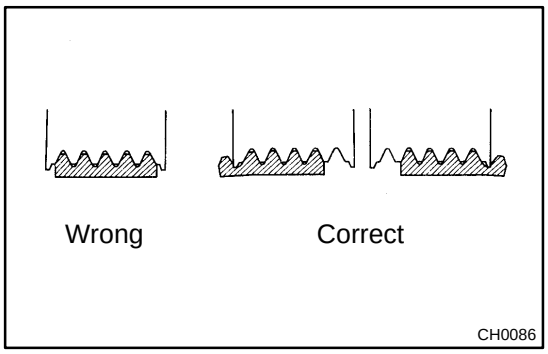

- Check that the drive belt fits properly in the ribbed grooves.

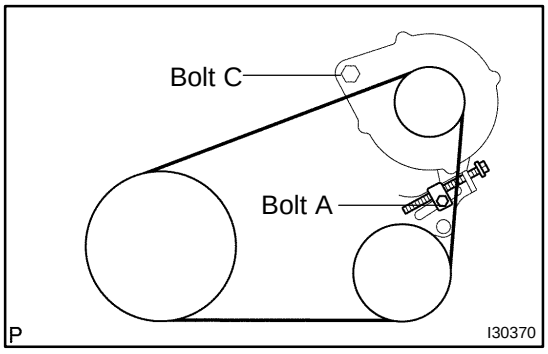

4. FULLY TIGHTEN V (COOLER COMPRESSOR TO CRANKSHAFT PULLEY) BELT NO.1

(a) Tighten the bolt A.
Torque: 17.5 N·m (178 kgf·cm, 12 ft·lbf)

(b) Tighten the bolt C.
Torque: 58 N·m (591 kgf·cm, 43 ft·lbf)

AIR CONDITIONER CONTROL ASSEMBLY

550BV–01

COMPONENTS

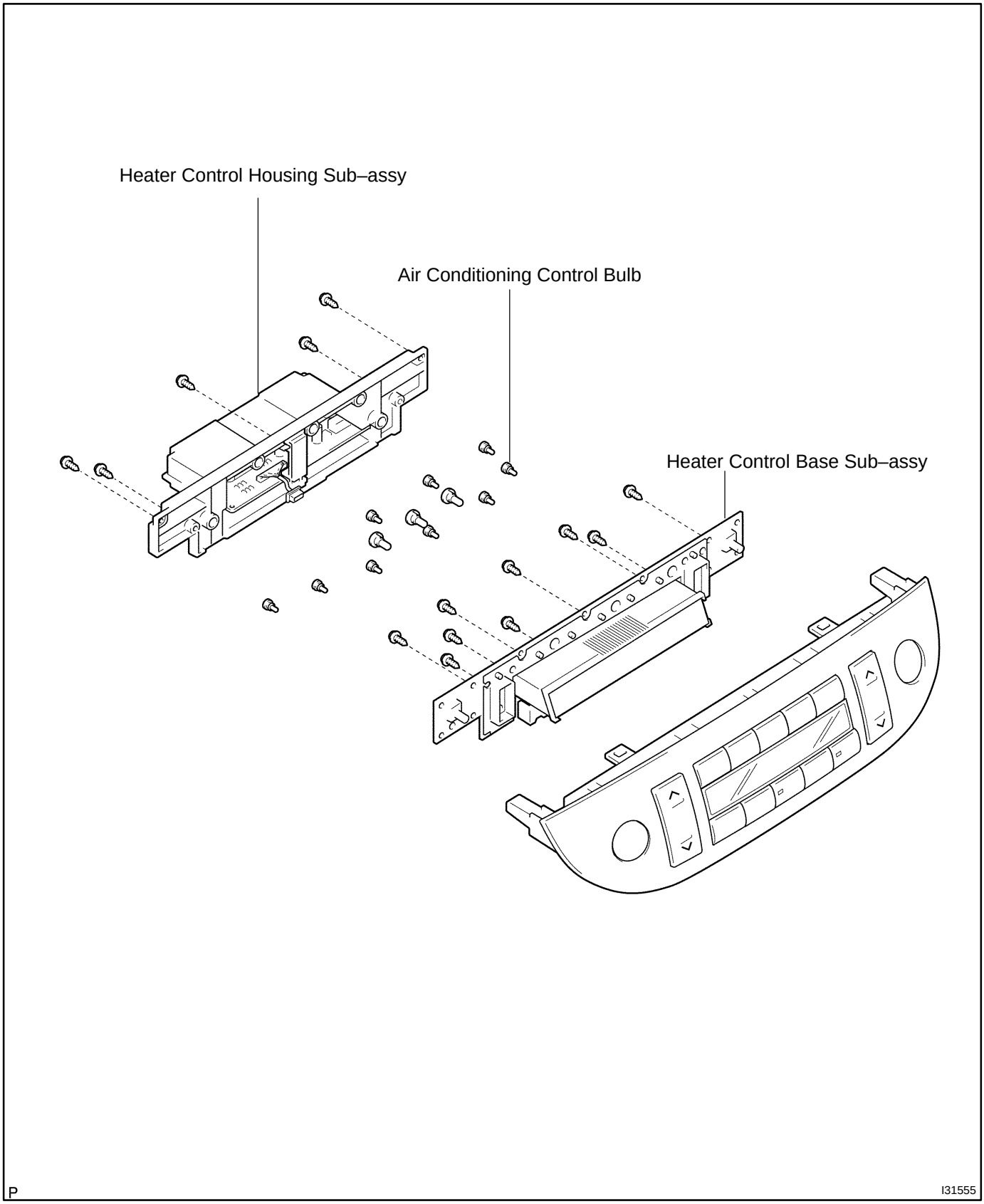

550BW–01

OVERHAUL

HINT:

COMPONENTS: See page 55–23

1. REMOVE AIR CONDITIONER CONTROL ASSEMBLY (See page 71–12)

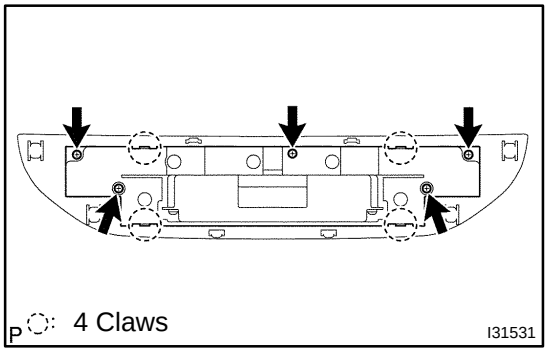

2. REMOVE HEATER CONTROL HOUSING SUB–ASSY

(a) Release the 4 fitting claws, remove the 5 screws.

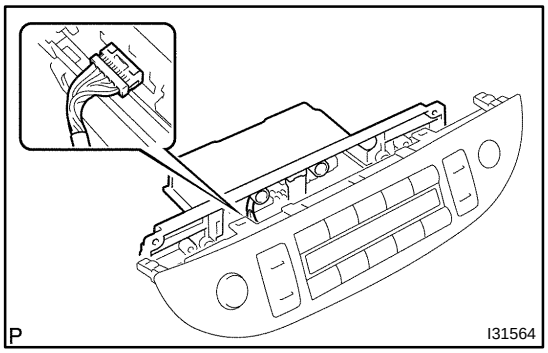

(b) Disconnect the connector, remove the heater control housing sub–assy.

3. REMOVE AIR CONDITIONING CONTROL BULB

(a) Remove the air conditioning control bulb from the heater control base sub–assy.

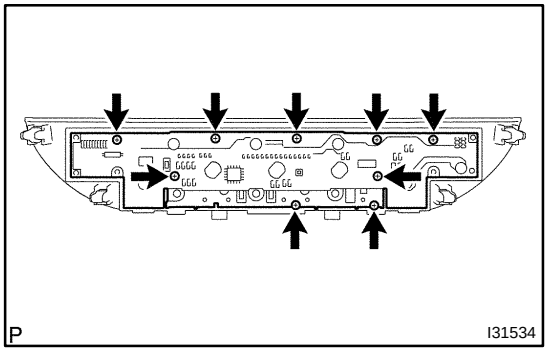

4. REMOVE HEATER CONTROL BASE SUB–ASSY

(a) Remove the 9 screws and heater control base sub–assy.

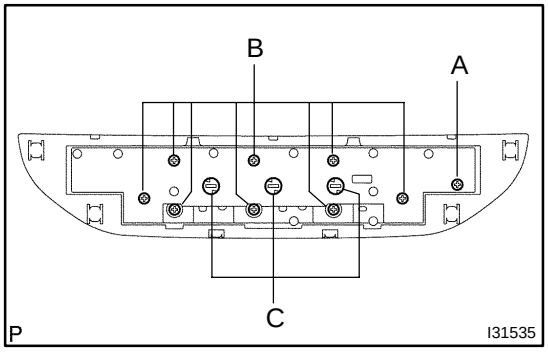

5. INSTALL AIR CONDITIONING CONTROL BULB

(a) Install the air conditioning control bulb to the heater control base sub–assy.

Bulb position:

Position	Part No.
A	90010 – 03054
B	90010 – 03055
C	90010 – 03056

AIR CONDITIONING PANEL SUB–ASSY

550BY–01

COMPONENTS

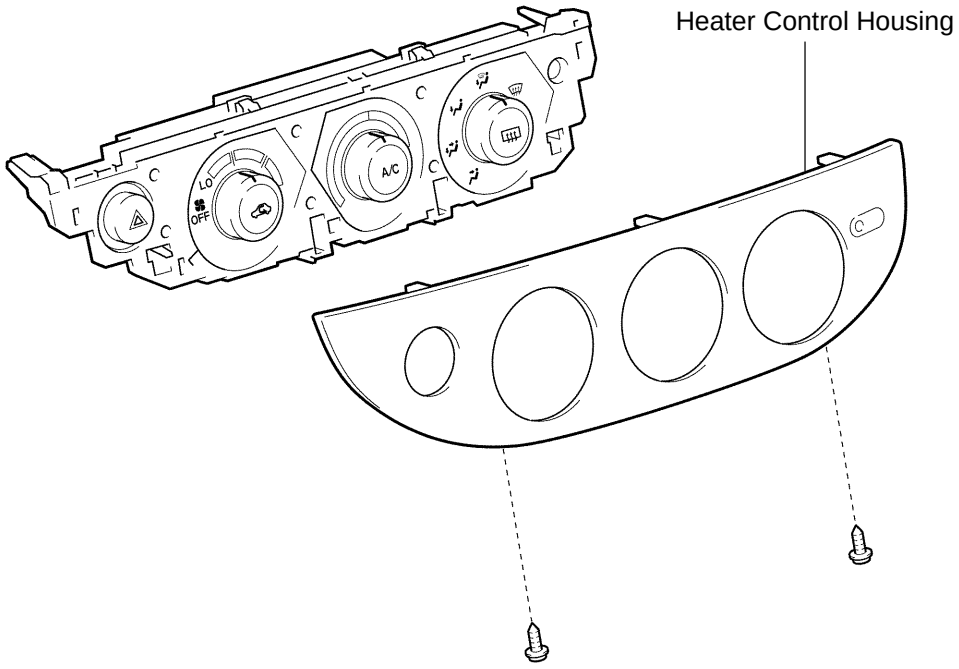

P

I31579

550BZ–01

OVERHAUL

HINT:

COMPONENTS: See page 55–25

1. REMOVE AIR CONDITIONING PANEL SUB–ASSY
(See page 71–12)

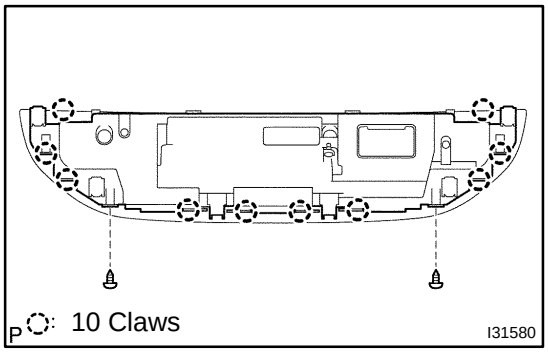

2. REMOVE HEATER CONTROL HOUSING

(a) Remove the 2 screws.
(b) Release the 10 fitting claws, remove the heater control housing.

AIR CONDITIONING RADIATOR ASSY

COMPONENTS

550C0–01

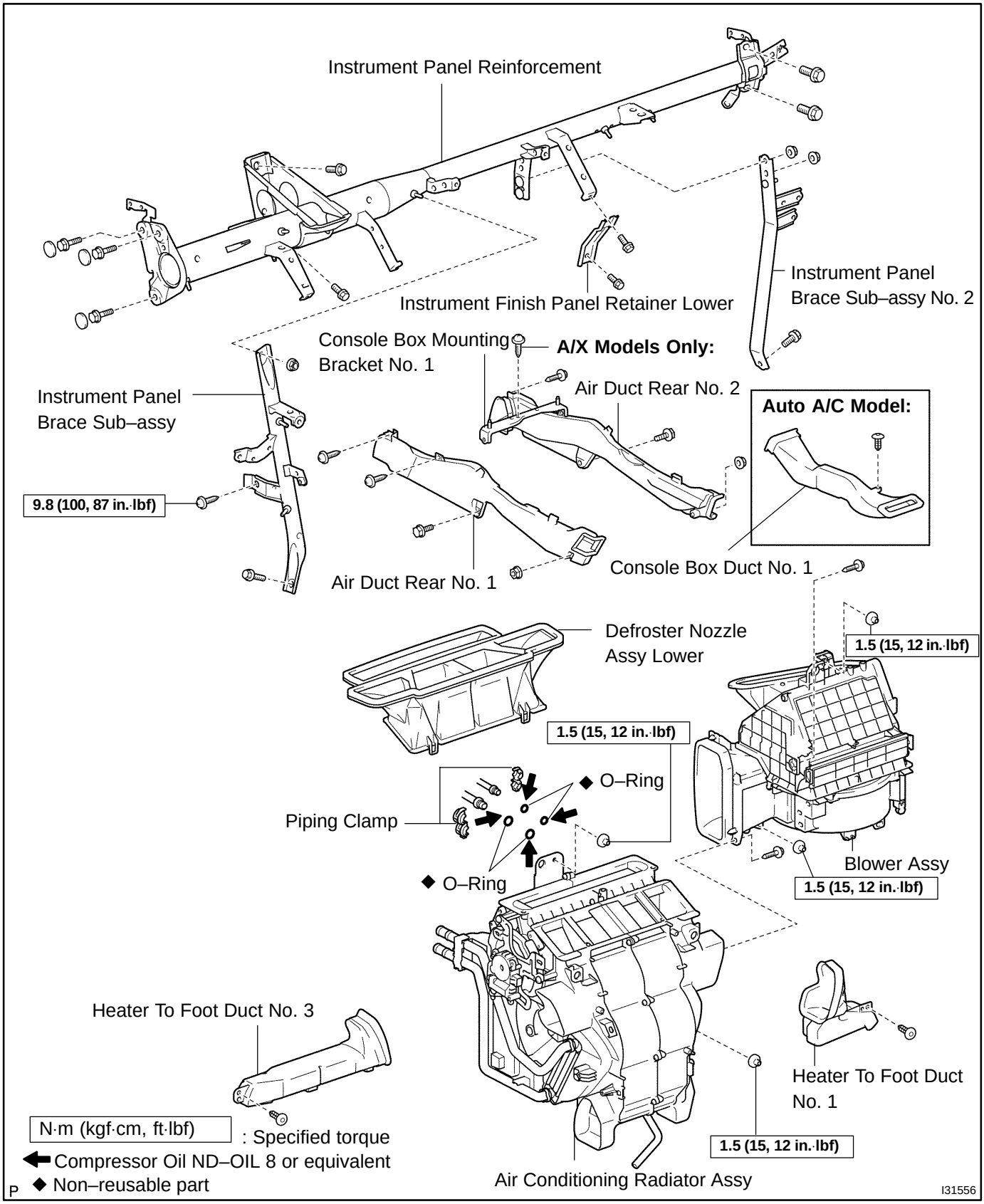

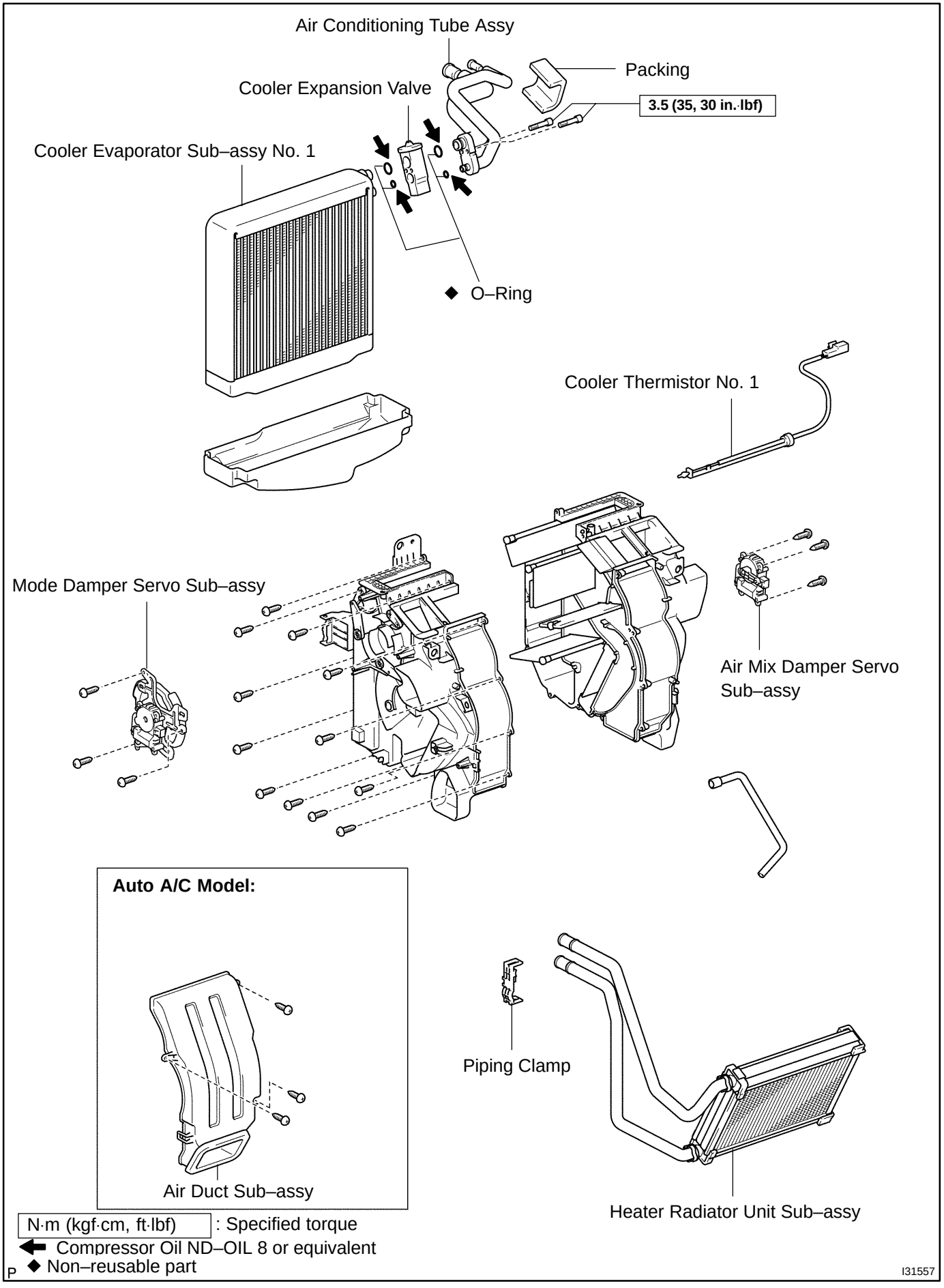
Air Conditioning Tube Assy
Packing
Cooler Expansion Valve
3.5 (35, 30 in.·lbf)
Cooler Evaporator Sub–assy No. 1
◆ O–Ring
Cooler Thermistor No. 1
Mode Damper Servo Sub–assy
Air Mix Damper Servo Sub–assy
Auto A/C Model:
Air Duct Sub–assy
Piping Clamp
Heater Radiator Unit Sub–assy
N·m (kgf·cm, ft·lbf) : Specified torque
Compressor Oil ND–OIL 8 or equivalent
◆ Non–reusable part
P
I31557

550C1–01

OVERHAUL

HINT:

COMPONENTS: See page 55–27

1. DISCHARGE REFRIGERANT FROM REFRIGERATION SYSTEM (See page 55–18)

SST 07110–58060 (07117–58080, 07117–58090, 07117–78050, 07117–88060, 07117–88070, 07117–88080)

2. DISCONNECT COOLER REFRIGERANT SUCTION HOSE NO.1

(a) Install SST to piping clamp.

SST 09870–00015

HINT:

Confirm the direction of the piping clamp claw and SST using the illustration showing on the caution label.

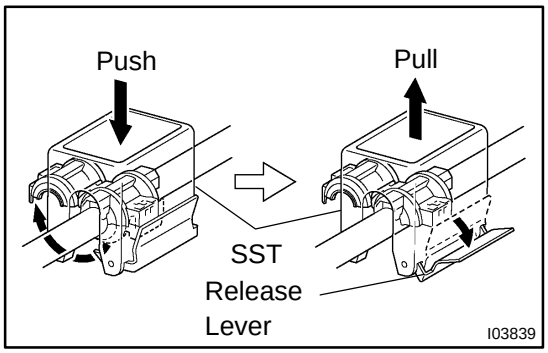

(b) Push down SST and release the clamp lock.

NOTICE:

Be careful not to deform the tube, when pushing SST.

(c) Pull SST slightly and push the release lever, then remove the piping clamp with SST.

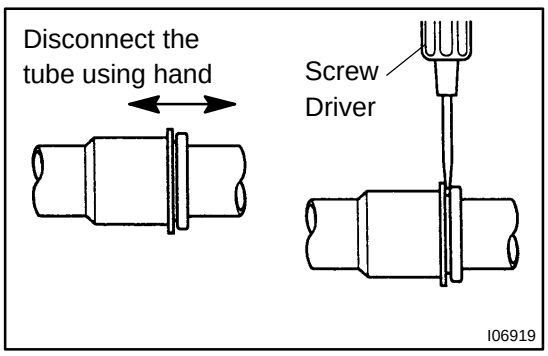

(d) Disconnect the cooler refrigerant suction hose No. 1.

NOTICE:

- **Do not use tools like screwdriver to remove the tube.**
- **Cap the open fittings immediately to keep moisture or dirt out of the system.**

3. DISCONNECT COOLER REFRIGERANT LIQUID PIPE A

SST 09870–00025

HINT:

Disconnect cooler refrigerant liquid pipe A in the same way as the cooler refrigerant suction hose No. 1.

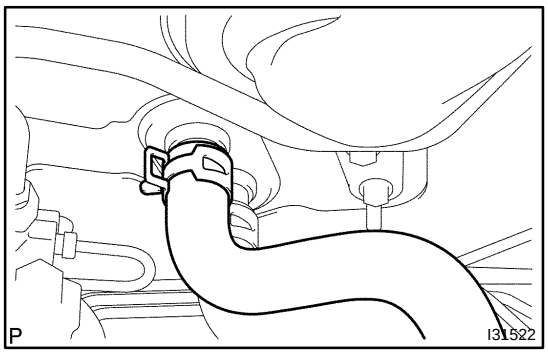

4. DISCONNECT HEATER OUTLET WATER HOSE

(a) Using pliers, grip the claws of clip and slide the clip and disconnect the heater outlet water hose.

5. DISCONNECT HEATER INLET WATER HOSE

HINT:
Disconnect in the same way as the heater outlet water hose.

6. REMOVE INSTRUMENT PANEL SAFETY PAD SUB–ASSY
(See page 71–12)

HINT:
Refer to the instructions for removal of the instrument panel safety pad sub–assy.

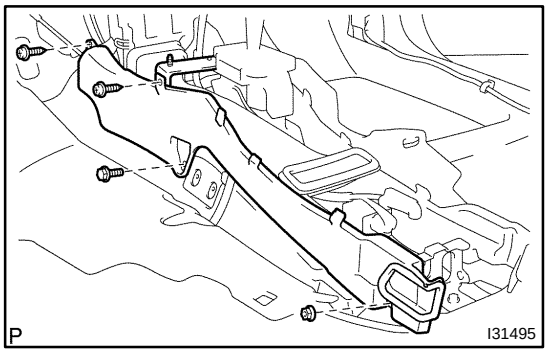

7. REMOVE AIR DUCT REAR NO.1

(a) Remove the 2 screws, bolt and nut.
(b) Remove the air duct rear No. 1.

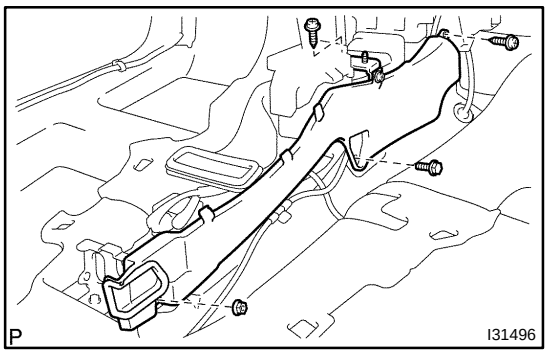

8. REMOVE AIR DUCT REAR NO.2

(a) Remove the bolt and nut.
(b) A/X models:
Remove the 2 screws, air duct rear No. 2 and console box mounting bracket No. 1.
(c) M/X models:
Remove the screw, air duct rear No. 2 and console box mounting bracket No. 1.

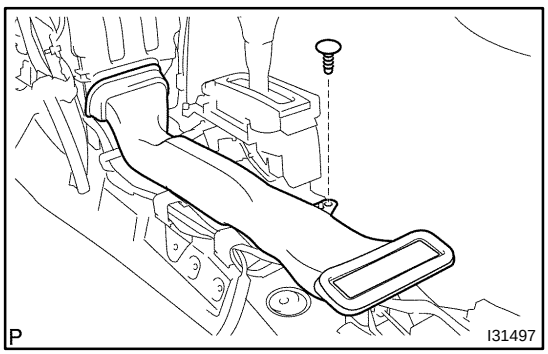

9. REMOVE CONSOLE BOX DUCT NO.1(AUTO AIR CONDITIONER)

(a) Remove the clip and console box duct No. 1.

10. DISCONNECT FLOOR SHIFT PARKING LOCK CABLE ASSY

11. REMOVE WINDSHIELD WIPER RELAY ASSY

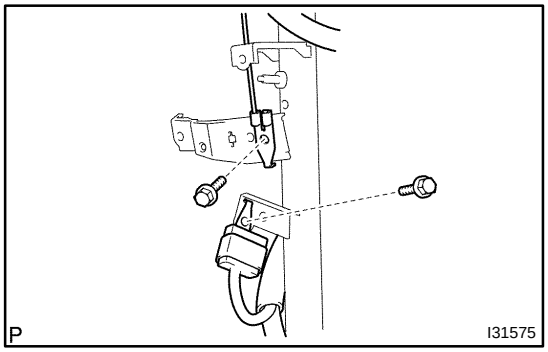

12. REMOVE INSTRUMENT PANEL BRACE SUB–ASSY NO.1

(a) Remove the 2 bolts and 2 earth wires.

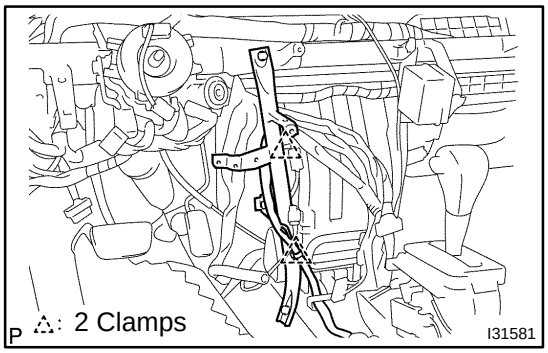

(b) Release the 2 clamps.

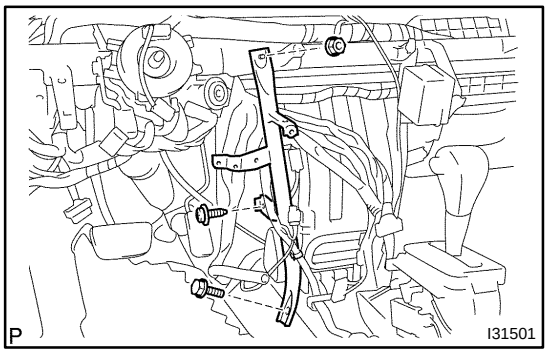

(c) Remove the bolt and screw.
(d) Remove the nut and instrument panel brace sub–assy No. 1.

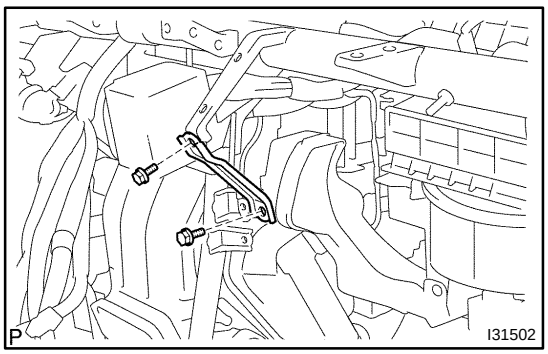

13. REMOVE INSTRUMENT FINISH PANEL RETAINER LOWER

(a) Remove the 2 bolts and instrument finish retainer lower.

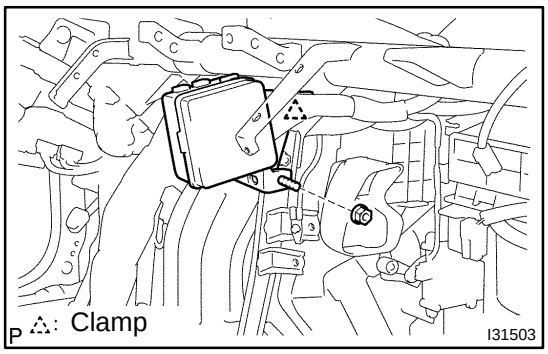

14. REMOVE INSTRUMENT PANEL BRACE SUB–ASSY NO.2

(a) Remove the clamp, nut and passenger side junction block.

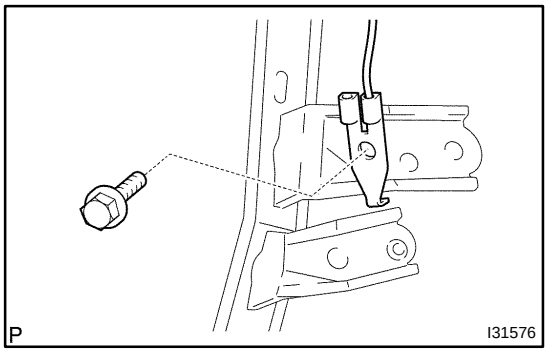

(b) Remove the bolt and earth wire.

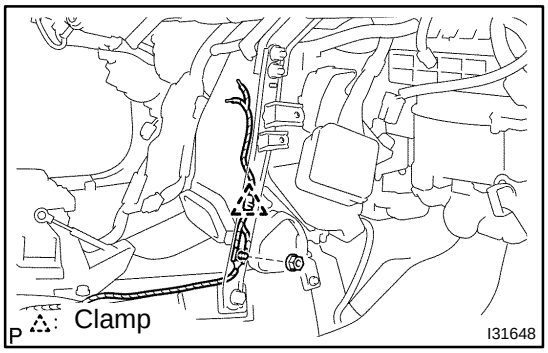

(c) Remove the nut and clamp.

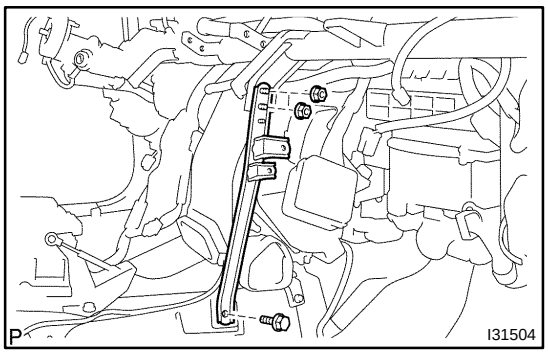

(d) Remove the 2 nuts, bolt and instrument panel brace sub–assy No. 2.

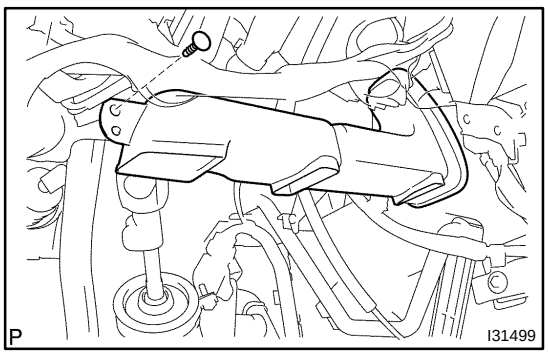

15. REMOVE HEATER TO FOOT DUCT NO.3

(a) Remove the clip and heater to foot duct No. 3.

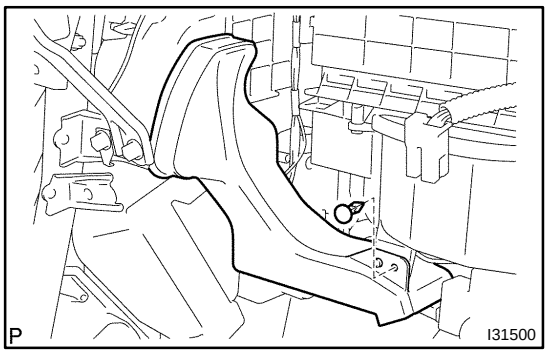

16. REMOVE HEATER TO FOOT DUCT NO.1

(a) Remove the clip and heater to foot duct No. 1.

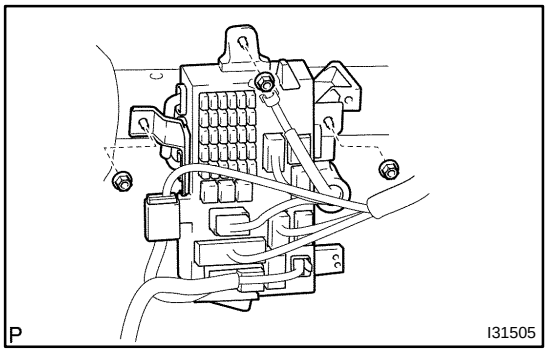

17. DISCONNECT STEERING COLUMN ASSY

(a) Remove the 3 nuts and driver side junction block.

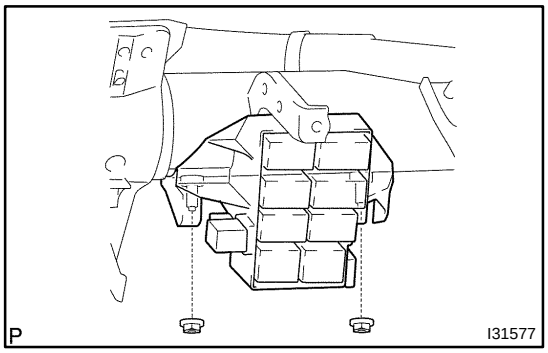

(b) Remove the 2 nuts and steering side connector block.

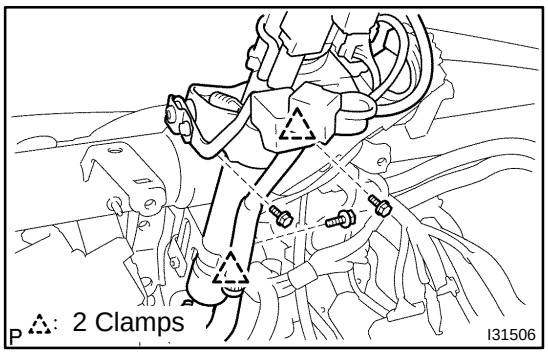

(c) Release the 2 clamps.

(d) Remove the 3 bolts, disconnect the steering column assy.

18. REMOVE INSTRUMENT PANEL REINFORCEMENT

(a) Disconnect the 7 clamps and the wire harness.

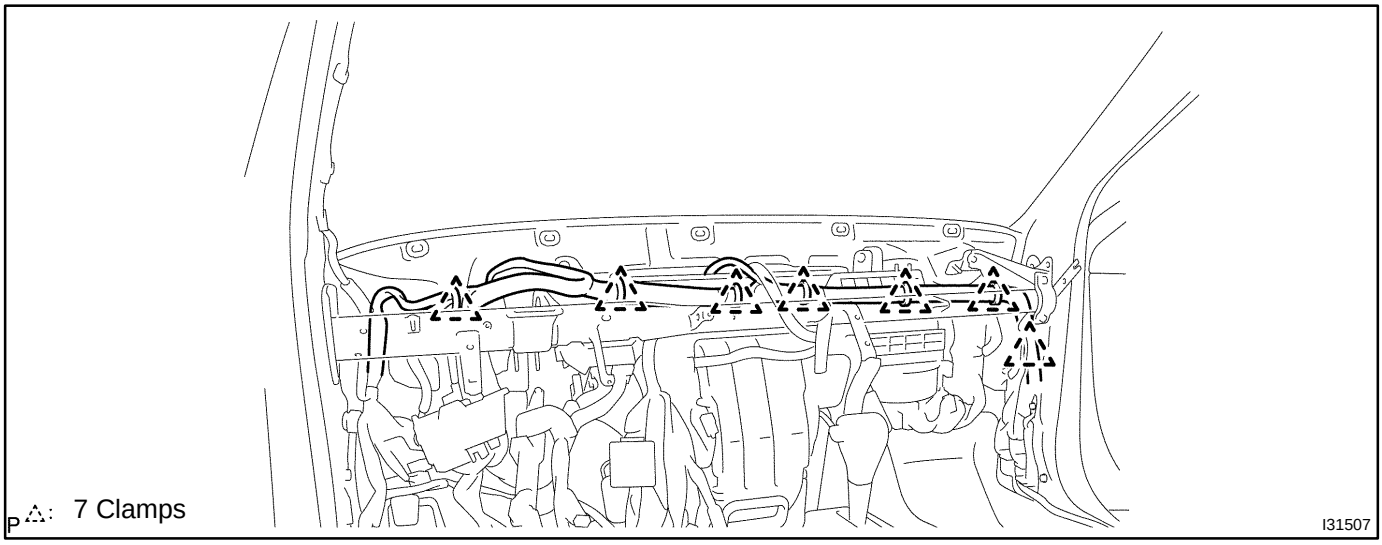

(b) Remove the 3 nuts, disconnect the 3 earth wires.

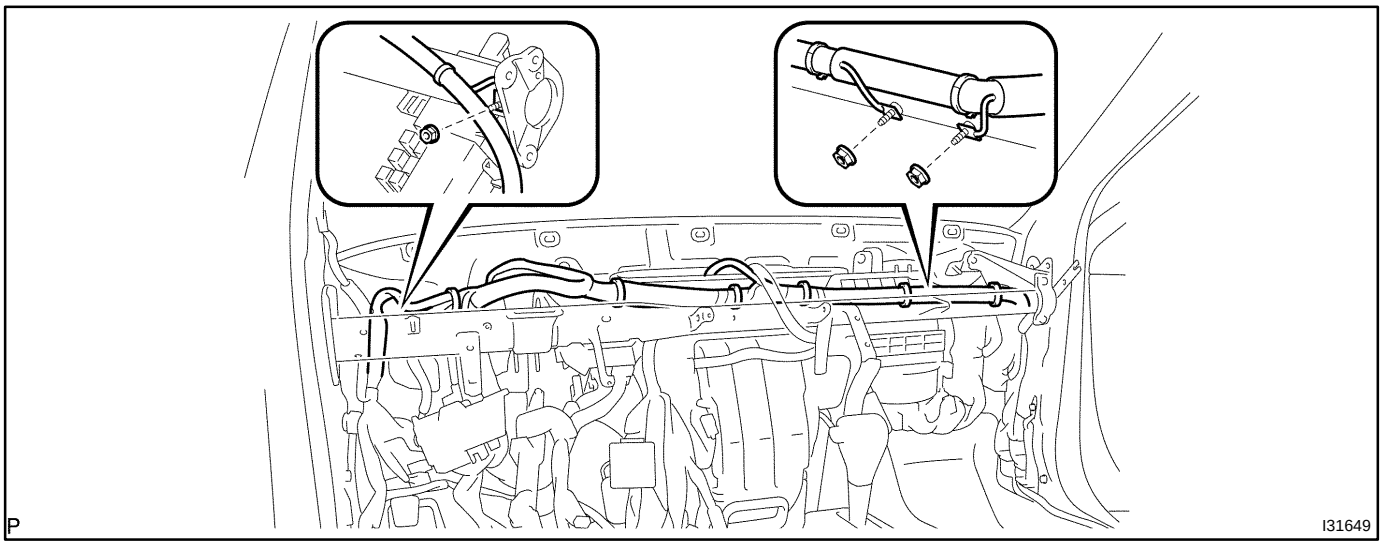

(c) Remove the 3 caps, 7 bolts and instrument panel reinforcement.

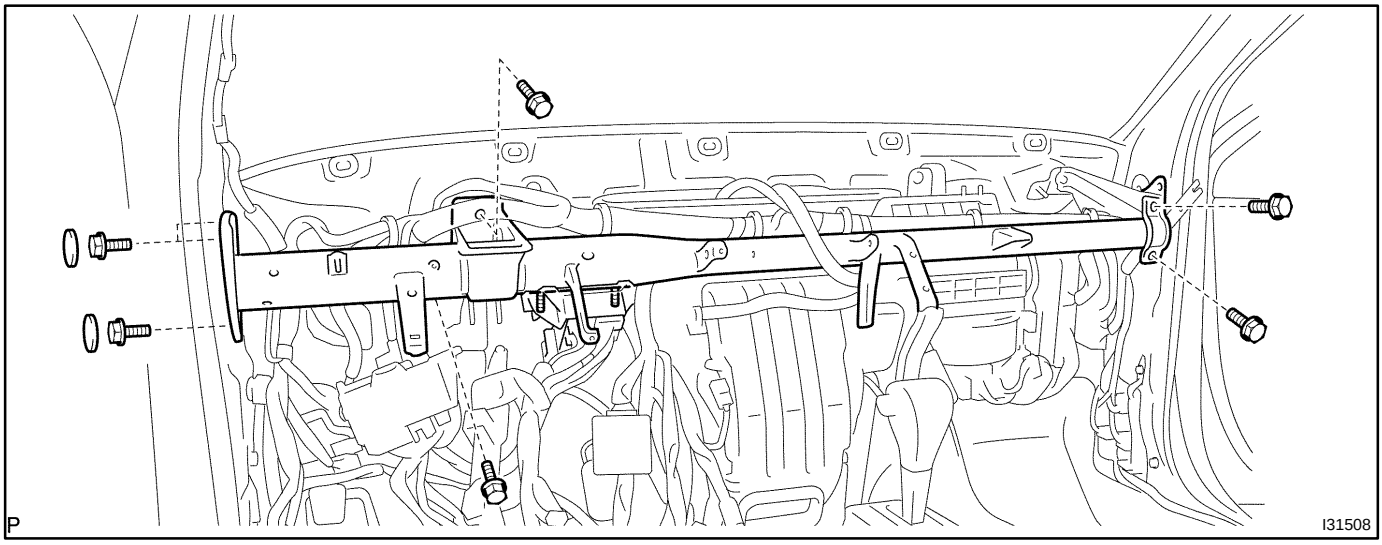

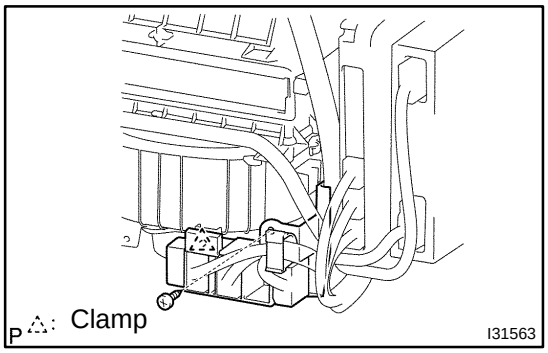

19. REMOVE BLOWER ASSY

(a) Disconnect the connectors.
(b) Remove the screw, clamp and blower connector holder.

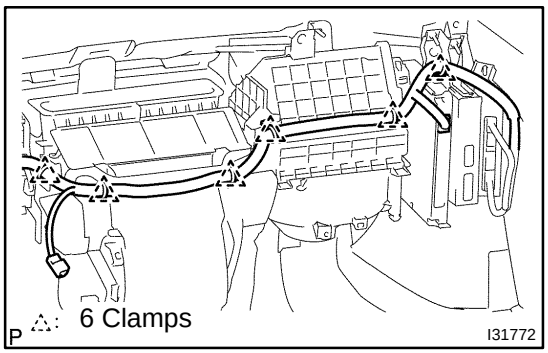

(c) Disconnect the 6 clamps and the wire harness.

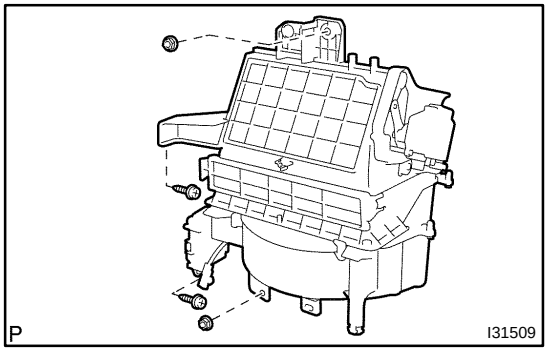

(d) Remove the 2 screws, 2 nuts and blower assy.

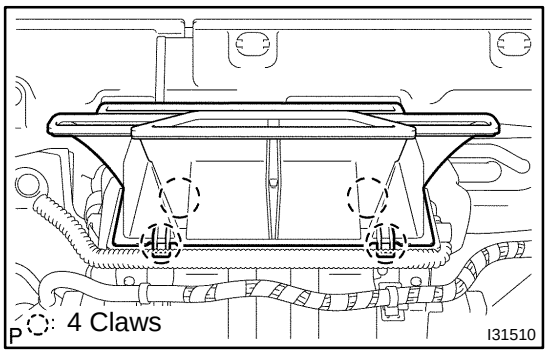

20. REMOVE DEFROSTER NOZZLE ASSY LOWER

(a) Release the 4 fitting claws, remove the defroster nozzle assy lower.

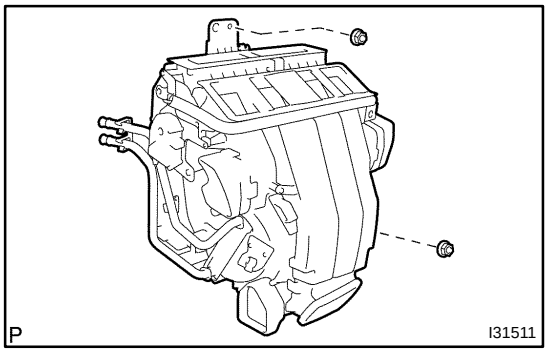

21. REMOVE AIR CONDITIONING RADIATOR ASSY

(a) Disconnect the connectors.
(b) Remove the 2 nuts and air conditioning radiator assy.

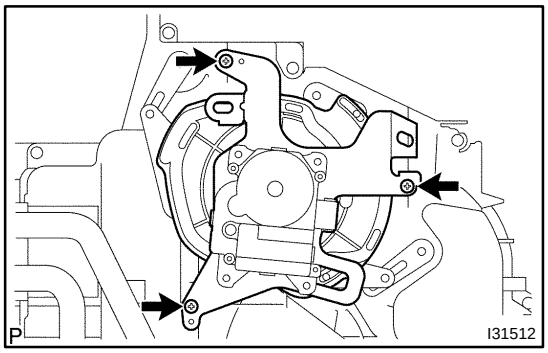

22. REMOVE MODE DAMPER SERVO SUB–ASSY

(a) Remove the 3 screws and mode damper servo sub–assy.

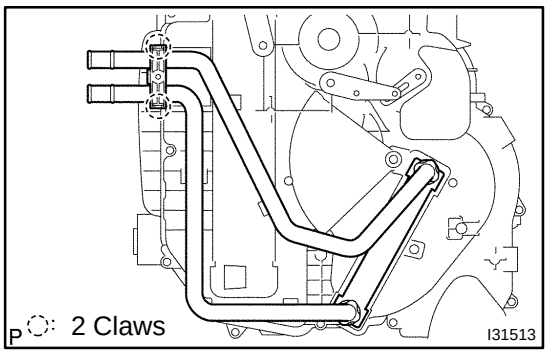

23. REMOVE HEATER RADIATOR UNIT SUB–ASSY

(a) Release the 2 fitting claws, remove the piping clamp.
(b) Remove the heater radiator unit sub–assy.

NOTICE:
Prepare a support plate and waste to catch the leaked coolant.

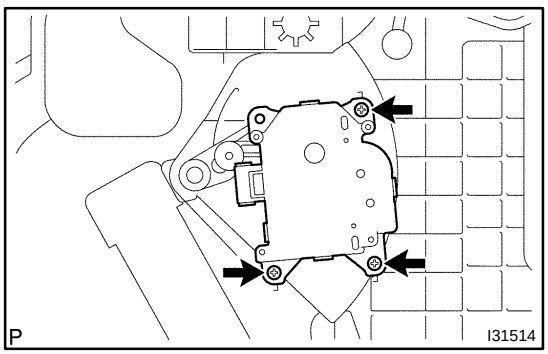

24. REMOVE AIRMIX DAMPER SERVO SUB–ASSY

(a) Remove the 3 screws and air mix damper servo sub–assy.

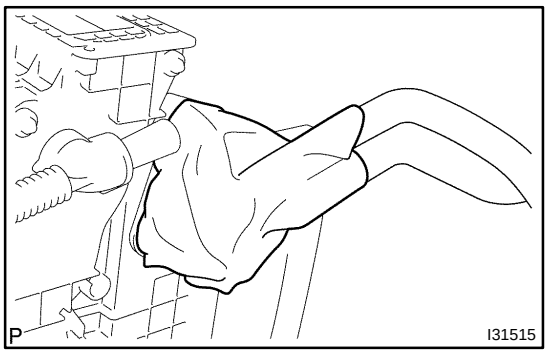

25. REMOVE AIR CONDITIONING TUBE ASSY

(a) Remove the packing.

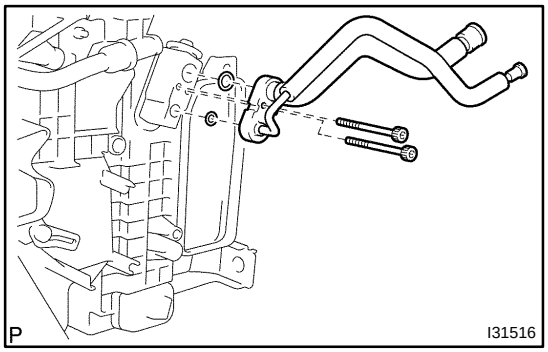

(b) Using a hexagon wrench 4 mm (0.16 in.), remove the 2 hexagon bolts and air conditioning tube assy.

(c) Remove the 2 O–rings from the air conditioning tube assy.

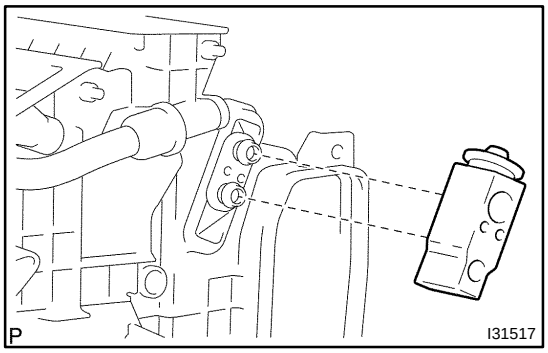

26. REMOVE COOLER EXPANSION VALVE

(a) Remove the cooler expansion valve from the cooler evaporator sub–assy No. 1.

27. REMOVE COOLER THERMISTOR NO.1

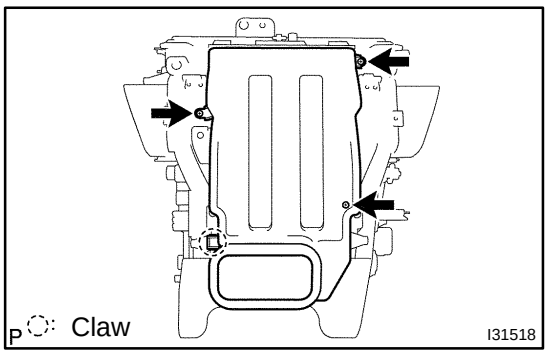

28. REMOVE COOLER EVAPORATOR SUB–ASSY NO.1

(a) Auto A/C model:
Release the fitting claw, remove the 3 screws and air duct sub–assy.

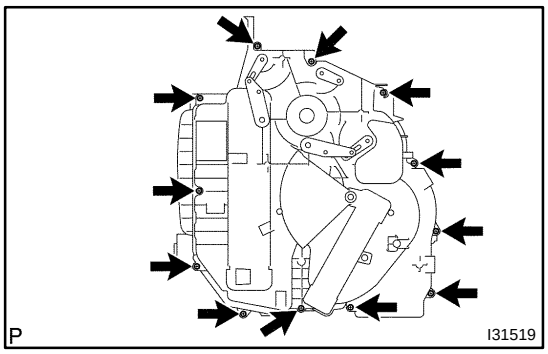

(b) Remove the 12 screws and heater case LH.
(c) Remove the cooler evaporator sub–assy No. 1 from the heater case RH.

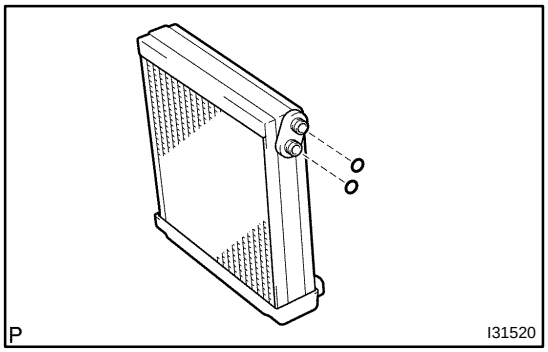

(d) Remove the 2 O–rings from the cooler evaporator sub–assy No. 1.

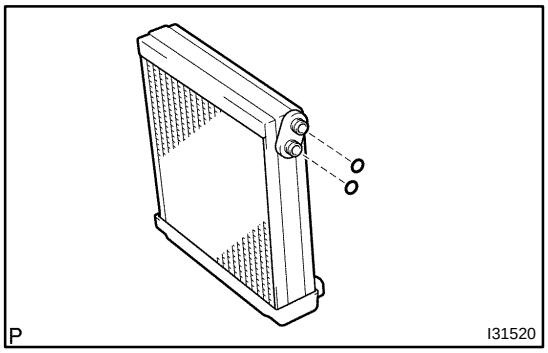

29. INSTALL COOLER EVAPORATOR SUB–ASSY NO.1

(a) Apply compressor oil to the contact surfaces of 2 new O–rings and the cooler expansion valve and install them.
Compressor oil: ND–OIL 8 or equivalent

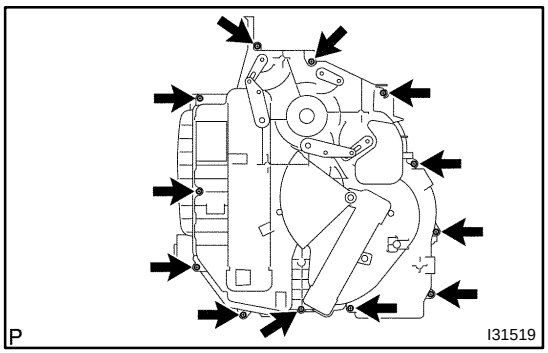

(b) Install the cooler evaporator sub–assy No. 1 to the heater case RH.
(c) Install the heater case LH with the 12 screws.

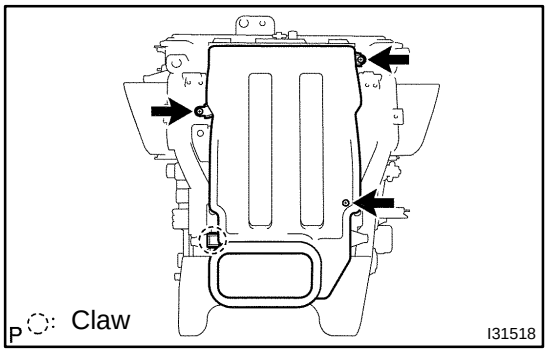

(d) Auto A/C model:
Install the air duct sub–assy with the 3 screws.

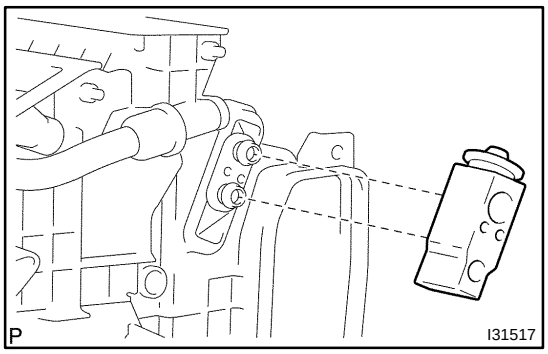

30. INSTALL COOLER EXPANSION VALVE

(a) Install the cooler expansion valve to the cooler evaporator No. 1.

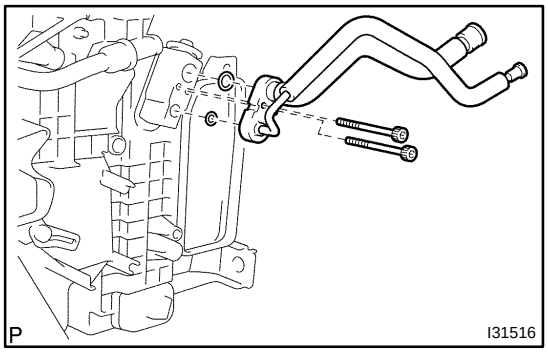

31. INSTALL AIR CONDITIONING TUBE ASSY

(a) Apply compressor oil to the contact surfaces of 2 new O–rings and the air conditioning tube assy and install them.
Compressor oil: ND–OIL 8 or equivalent

(b) Using a hexagon wrench 4 mm (0.16 in.), install the air conditioner tube assy and 2 hexagon bolts to the cooler evaporator sub–assy No. 1.
Torque: 3.5 N·m (35 kgf·cm, 30 in.·lbf)

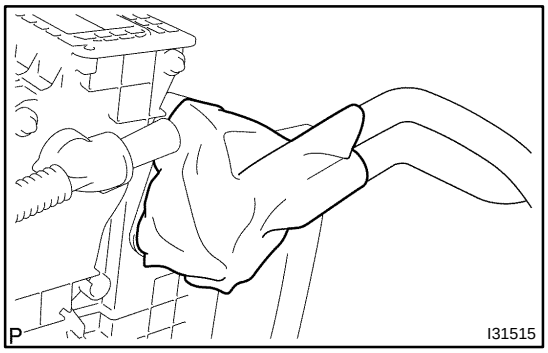

(c) Install the packing.

HINT:

Securely attach so that the gap in the packing will not be mode.

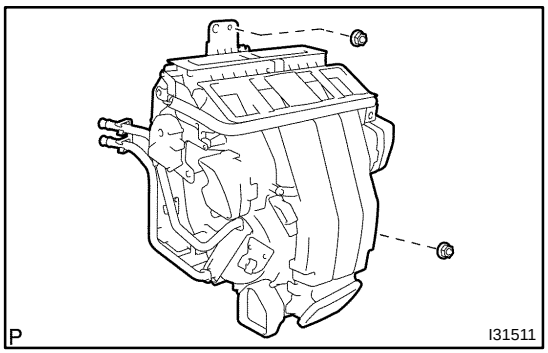

32. INSTALL AIR CONDITIONING RADIATOR ASSY

(a) Install the air conditioning radiator assy with the 2 nuts.
Torque: 1.5 N·m (15 kgf·cm, 12 in.·lbf)

(b) Connect the connector.

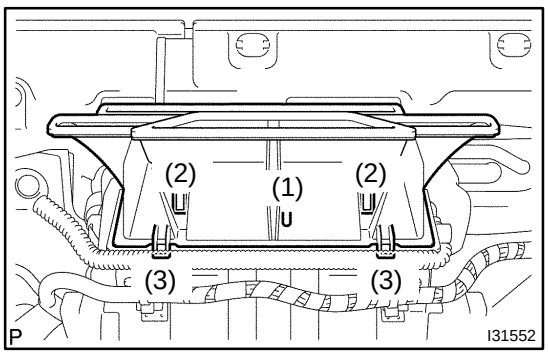

33. INSTALL DEFROSTER NOZZLE ASSY LOWER

(a) Install the defroster nozzle assy lower.

NOTICE:

After locating the pin (1) in the illustration, install (2), then (3).

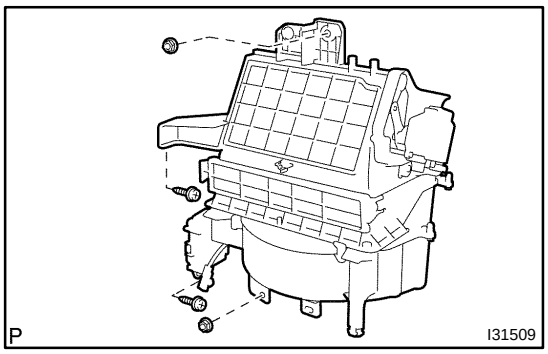

34. INSTALL BLOWER ASSY

(a) Install the blower assy with the 2 screws and 2 nuts.
Torque: 1.5 N·m (15 kgf·cm, 12 in.·lbf)

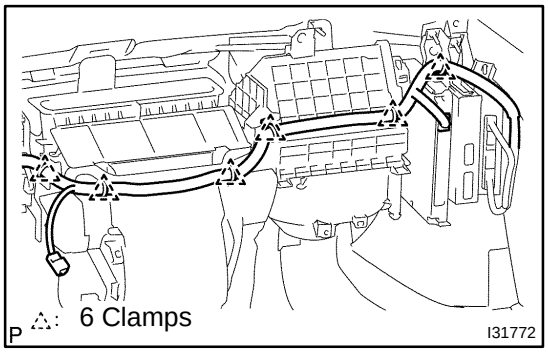

(b) Install the 6 clamps, connect the wire harness.

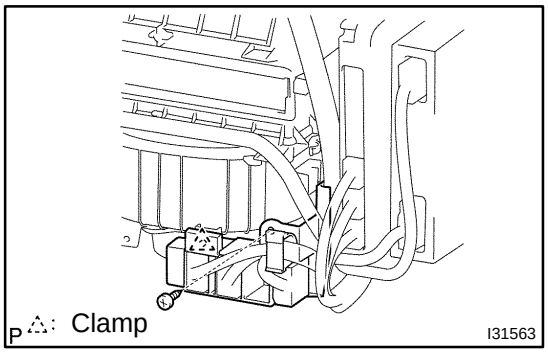

(c) Install the blower connector holder with the screw and clamp.
(d) Connect the connectors.

35. INSTALL INSTRUMENT PANEL REINFORCEMENT

(a) Install the instrument panel reinforcement with the 7 bolts and 3 caps.

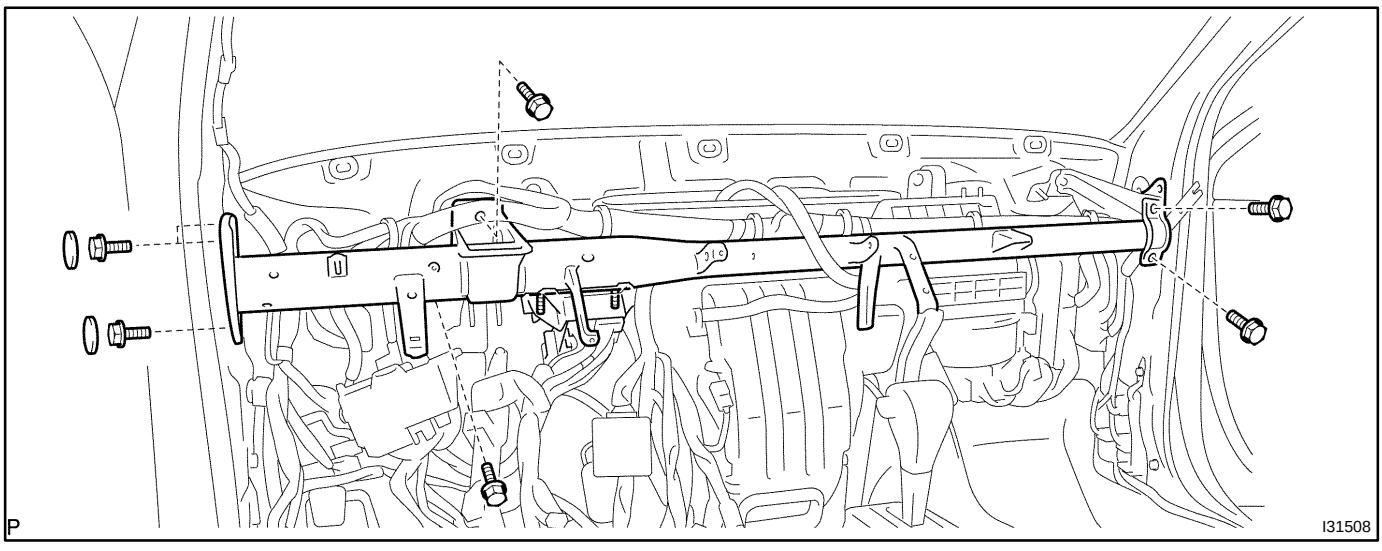

(b) Install the 3 earth wires with the 3 nuts.

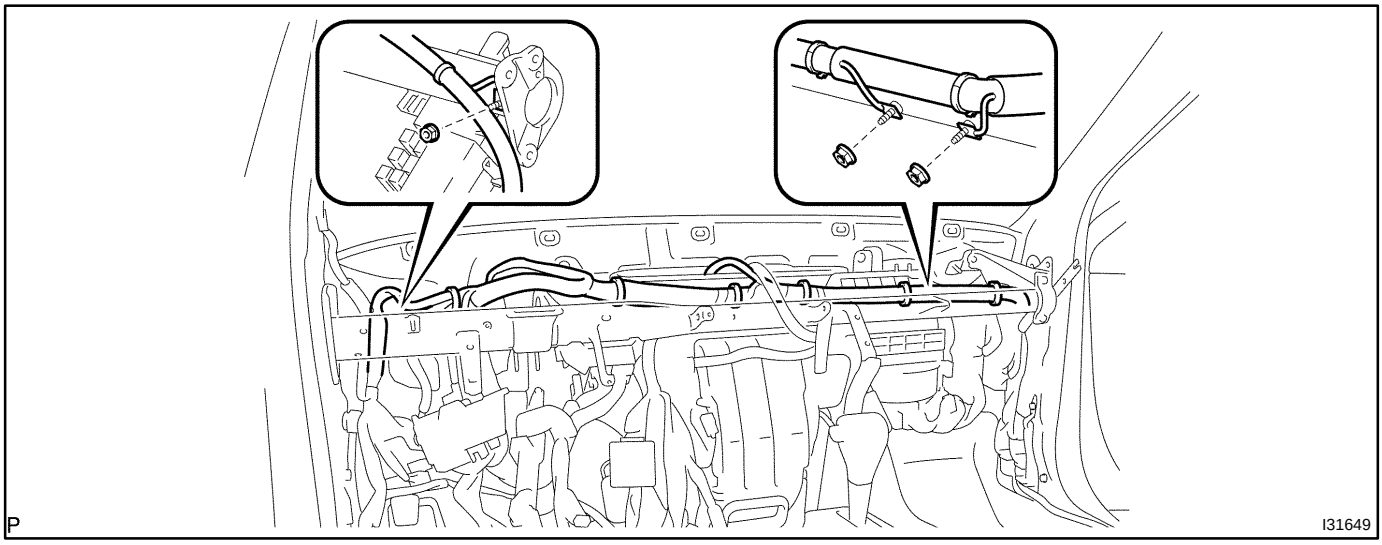

(c) Install the 7 clamps, connect the wire harness.

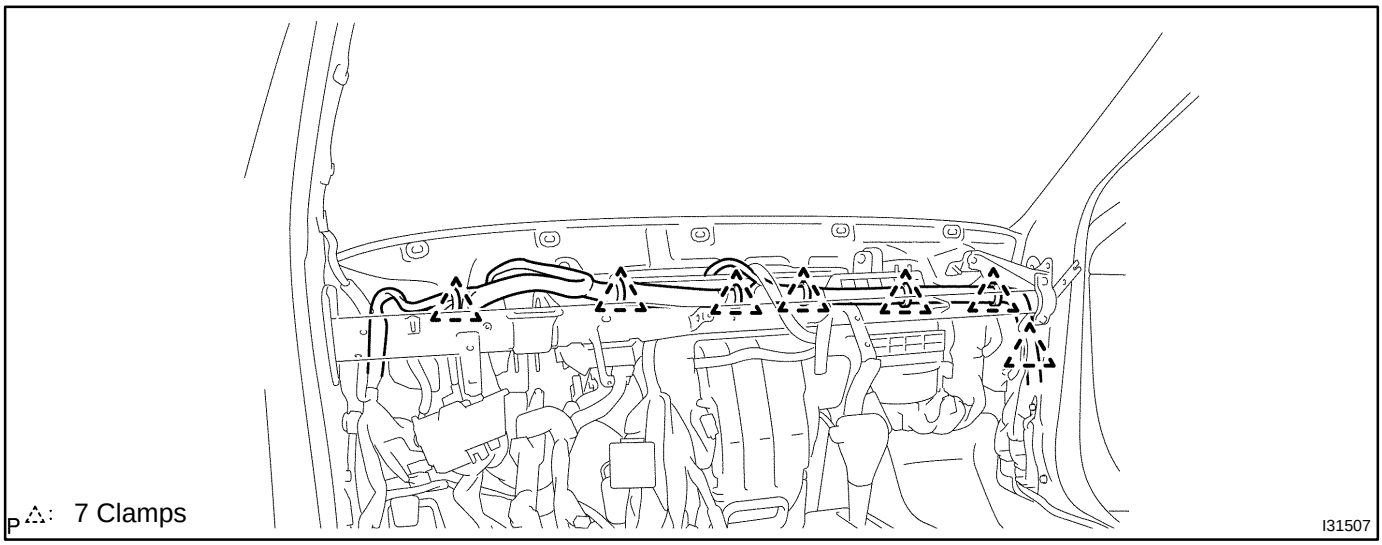

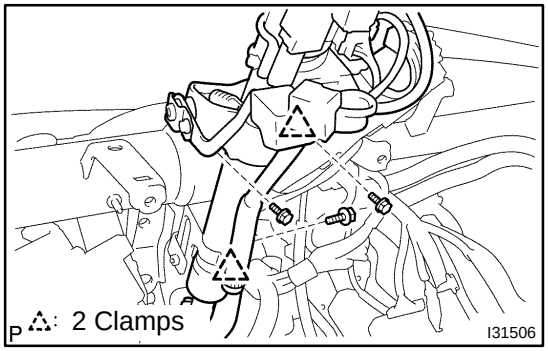

36. INSTALL STEERING COLUMN ASSY

(a) Install the steering column assy with the 3 bolts.

(b) Install the 2 clamps.

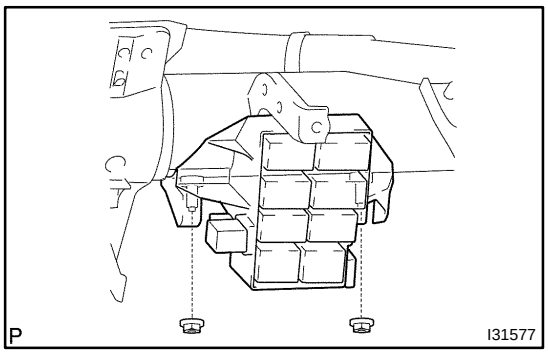

(c) Install the steering side connector block with the 2 nuts.
Torque: 8.4 N·m (85 kgf·cm, 73 in.·lbf)

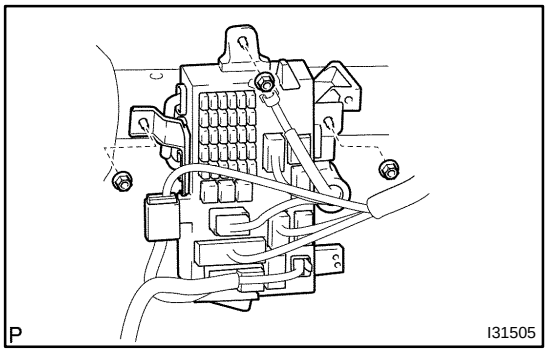

(d) Install the driver side junction block with the 3 nuts.
Torque: 8.4 N·m (85 kgf·cm, 73 in.·lbf)

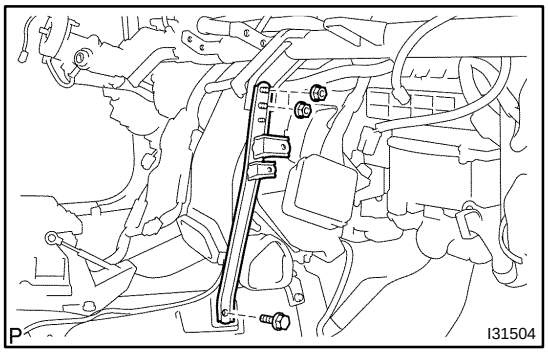

37. INSTALL INSTRUMENT PANEL BRACE SUB–ASSY NO.2

(a) Install the instrument panel brace sub–assy No. 2 with the 2 nuts and bolt.

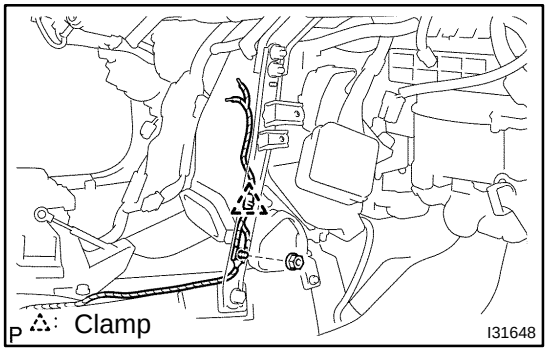

(b) Install the nut and clamp.

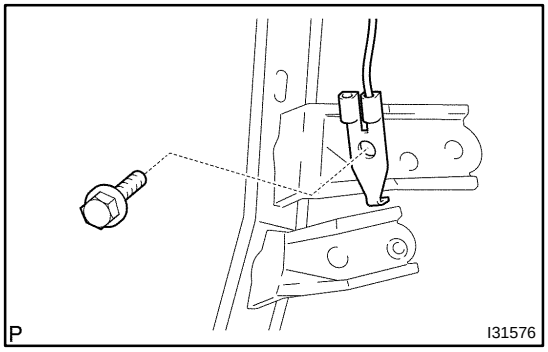

(c) Install the earth wire with the bolt.

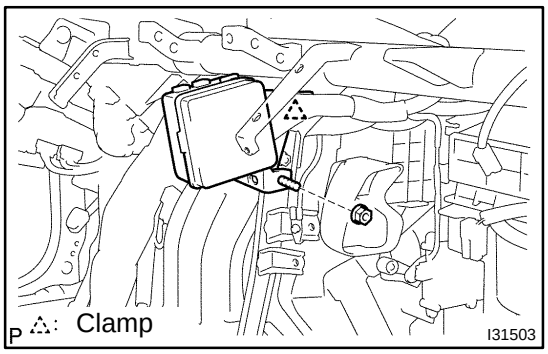

(d) Install the passenger side junction block with the nut and clamp.
Torque: 8.4 N·m (85 kgf·cm, 73 in.·lbf)

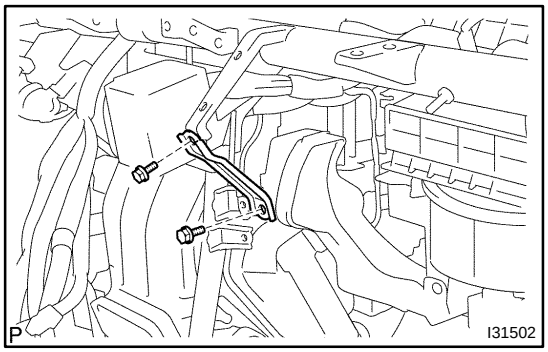

38. INSTALL INSTRUMENT FINISH PANEL RETAINER LOWER

(a) Install the instrument finish panel retainer lower with the 2 bolts.

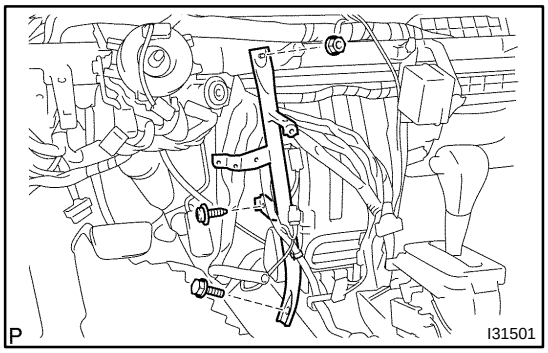

39. INSTALL INSTRUMENT PANEL BRACE SUB–ASSY NO.1

(a) Install the instrument panel brace sub–assy No. 1 with the nut.
(b) Install the bolt and screw.
Torque: 9.8 N·m (100 kgf·cm, 87 in.·lbf) (Screw)

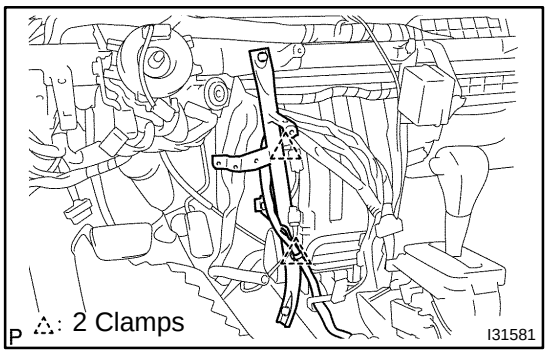

(c) Install the 2 clamps.

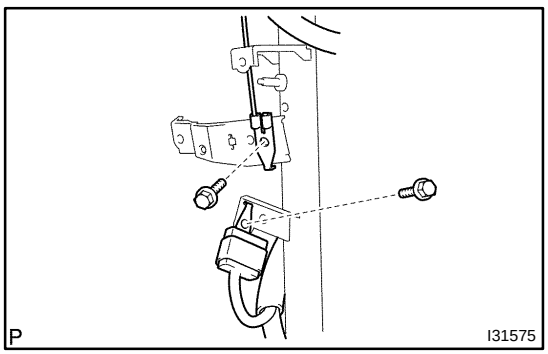

(d) Install the 2 earth wires with the 2 bolts.

40. INSTALL INSTRUMENT PANEL SAFETY PAD SUB–ASSY
(See page 71–12)

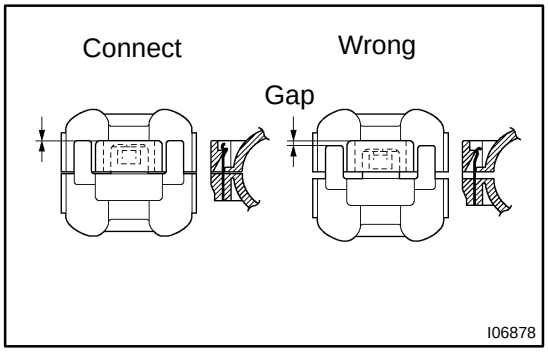

41. INSTALL COOLER REFRIGERANT SUCTION HOSE NO.1

(a) Lubricate new O–ring with compressor oil and install them to the hose.
Compressor oil: ND–OIL 8 or equivalent
(b) Install the cooler refrigerant suction hose No.1 and piping clamp.

HINT:
After connection, check the fitting for claw of the piping clamp.

42. INSTALL COOLER REFRIGERANT LIQUID PIPE A

HINT:
Install in the same way as the cooler refrigerant suction hose No. 1.

43. ADD COOLANT
1MZ–FE: (See page 16–20)
2AZ–FE: (See page 16–6)

44. CHARGE REFRIGERANT (See page 55–18)
SST 07110–58060 (07117–58060, 07117–58070, 07117–58080, 07117–58090, 07117–78050, 07117–88060, 07117–88070, 07117–88080)
Specified amount: 550 ± 50 g (19.37 ± 1.76 oz.)

45. WARM UP ENGINE

46. CHECK ENGINE COOLANT LEAK
1MZ–FE: (See page 16–14)
2AZ–FE: (See page 16–1)

47. INSPECT LEAKAGE OF REFRIGERANT (See page 55–18)

BLOWER ASSY

COMPONENTS

550C2–01

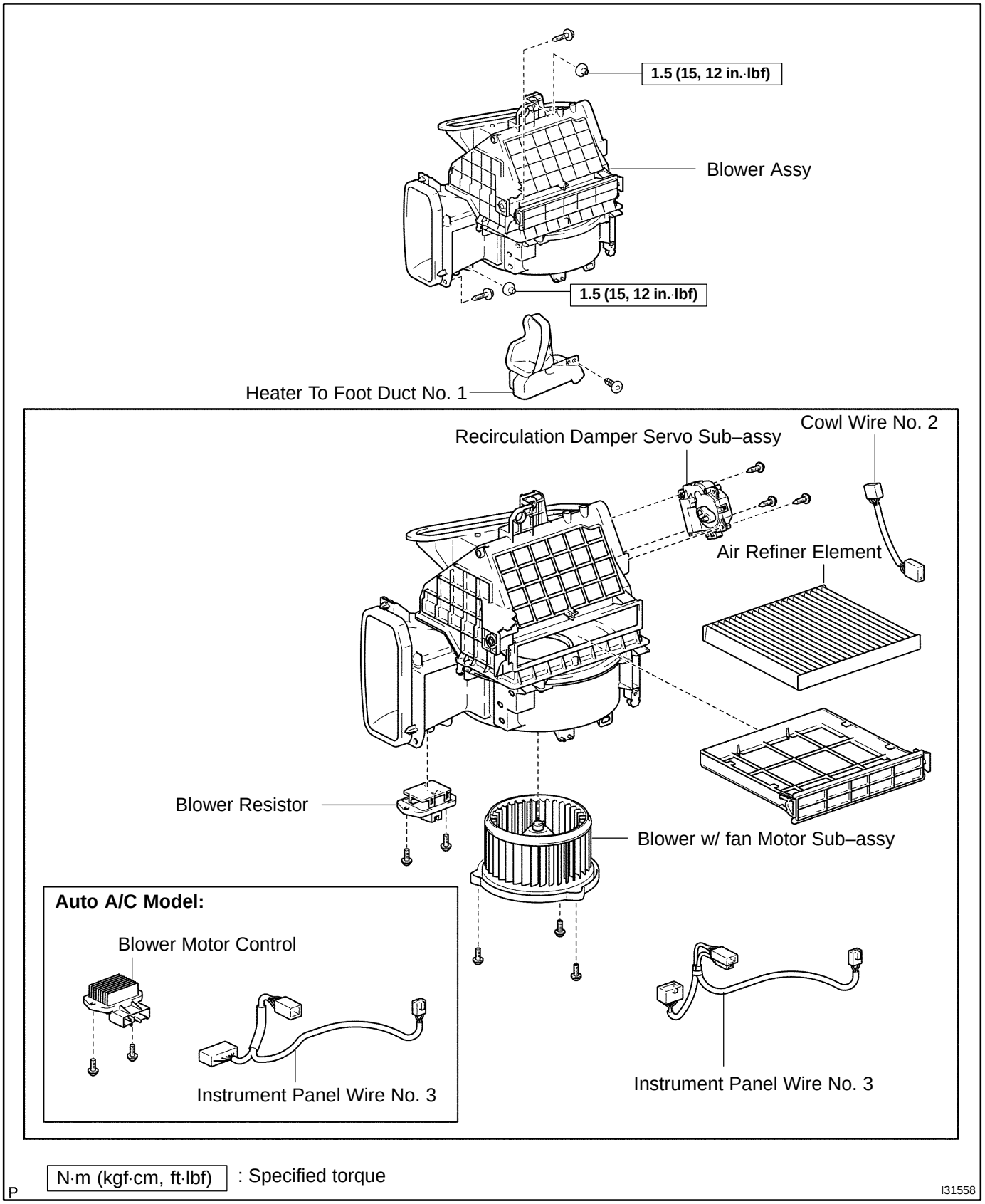

550C3–01

OVERHAUL

HINT:

COMPONENTS: See page 55–45

1. **REMOVE INSTRUMENT PANEL SAFETY PAD SUB–ASSY (See page 71–12)**
2. **REMOVE HEATER TO FOOT DUCT NO.1 (See page 55–29)**
3. **REMOVE BLOWER ASSY (See page 55–29)**
4. **REMOVE AIR REFINER ELEMENT**

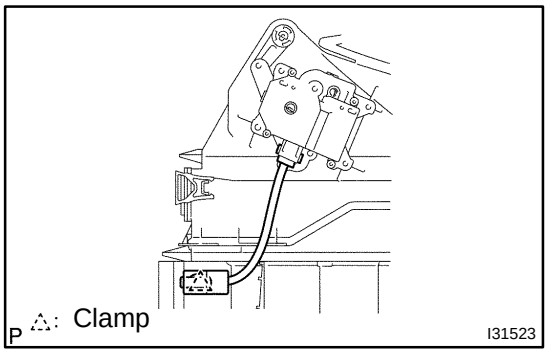

5. REMOVE COWL WIRE NO.2

(a) Remove the clamp and cowl wire No. 2.

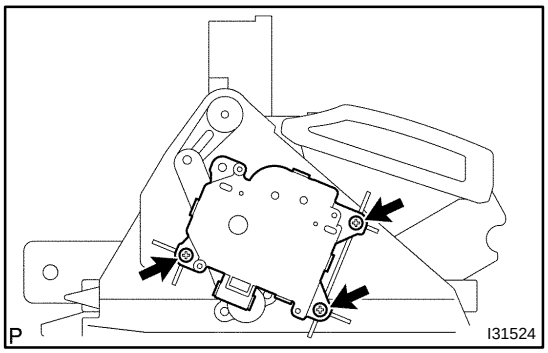

6. REMOVE RECIRCULATION DAMPER SERVO SUB–ASSY

(a) Remove the 3 screws and recirculation damper servo sub–assy.

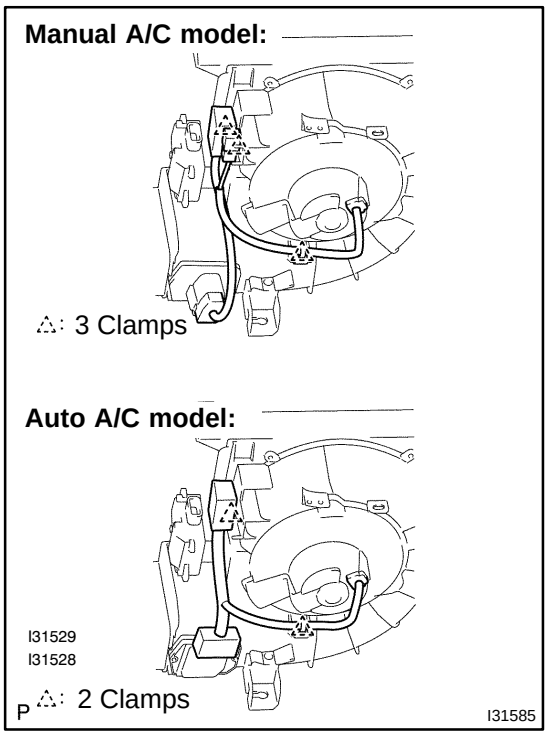

7. REMOVE INSTRUMENT PANEL WIRE NO.3

(a) Manual A/C model:
Disconnect the connectors, remove the 3 clamps and instrument panel wire No. 3.

(b) Auto A/C model:
Disconnect the connectors, remove the 2 clamps and instrument panel wire No. 3.

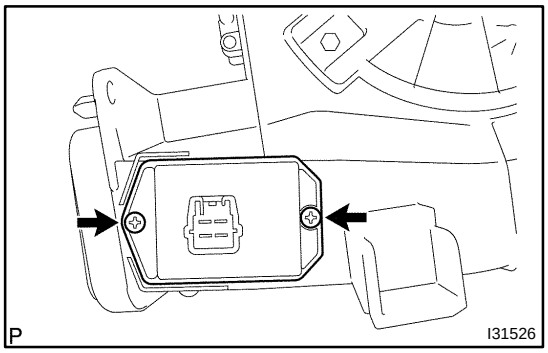

8. REMOVE BLOWER RESISTOR (MANUAL AIR CONDITIONER)

(a) Remove the 2 screws and blower resistor.

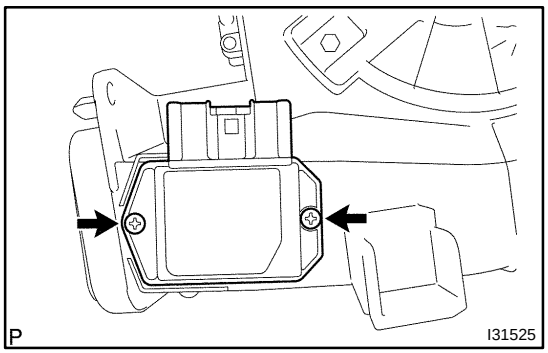

9. REMOVE BLOWER MOTOR CONTROL (AUTO AIR CONDITIONER)

(a) Remove the 2 screws and blower motor control.

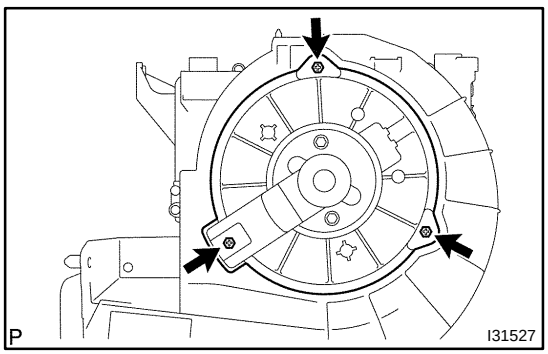

10. REMOVE BLOWER W/FAN MOTOR SUB–ASSY

(a) Remove the 3 screws and blower w/fan motor sub–assy.

11. INSTALL BLOWER ASSY
(See page 55–29)

12. INSTALL INSTRUMENT PANEL SAFETY PAD SUB–ASSY
(See page 71–12)

COOLER COMPRESSOR ASSY (1MZ–FE)

COMPONENTS

550C4–01

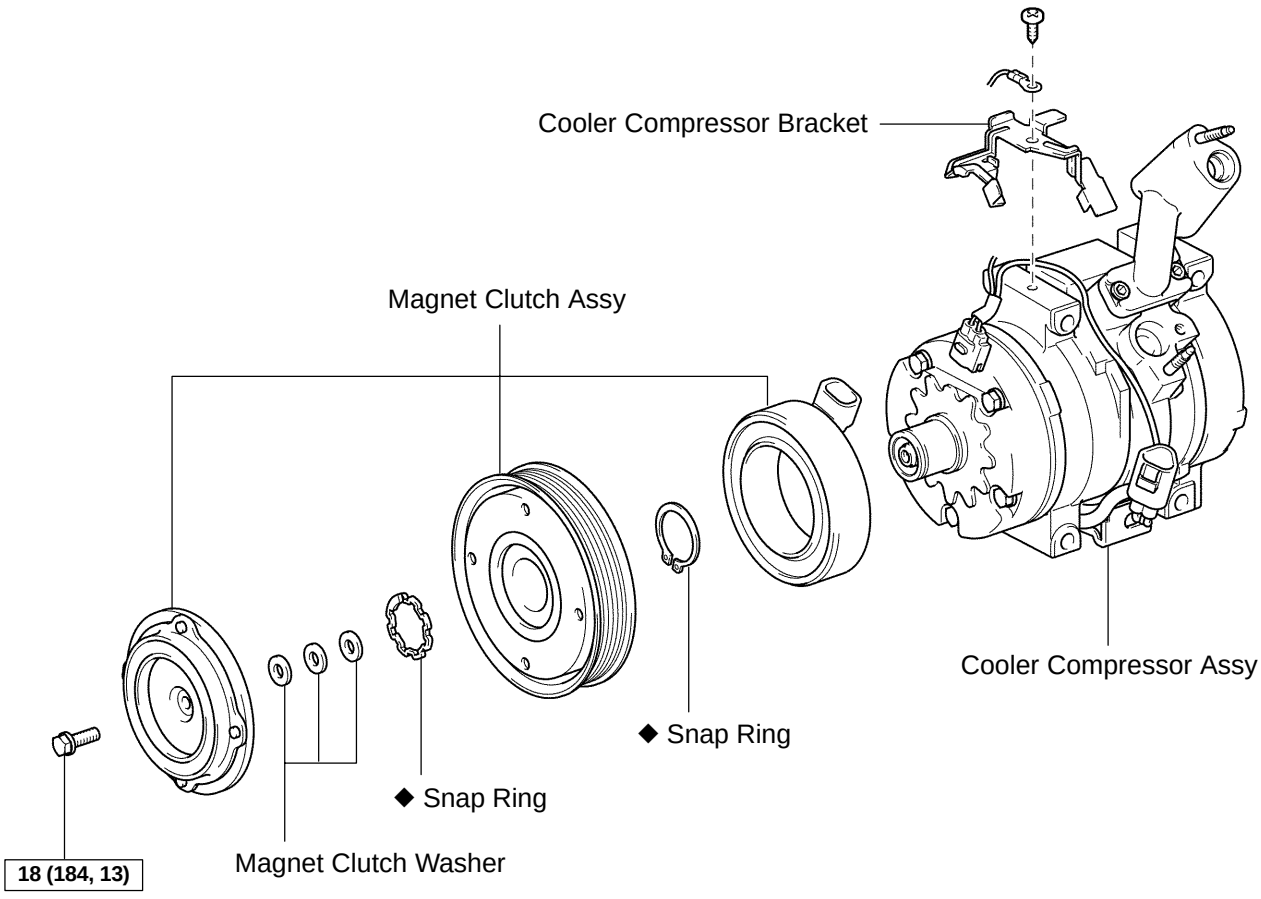

N·m (kgf·cm, ft·lbf) : Specified torque

◆ Non–reusable part

P

I31774

550C5–01

REPLACEMENT

HINT:

COMPONENTS: See page 55–49

1. **DISCHARGE REFRIGERANT FROM REFRIGERATION SYSTEM (See page 55–18)**
   SST 07110–58060 (07117–58080, 07117–58090, 07117–78050, 07117–88060, 07117–88070, 07117–88080)
2. **REMOVE V (COOLER COMPRESSOR TO CRANKSHAFT PULLEY) BELT NO.1 (See page 55–21)**
3. **REMOVE GENERATOR ASSY (See page 19–33)**

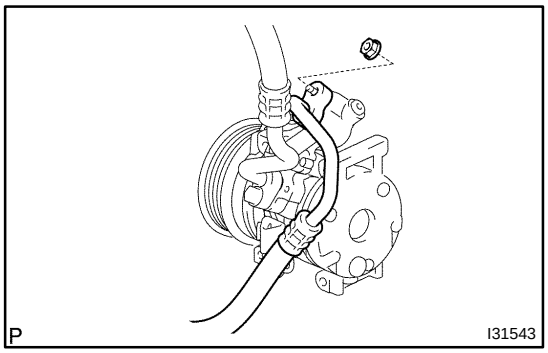

4. **DISCONNECT COOLER REFRIGERANT DISCHARGE HOSE NO.1**

(a) Remove the nut and disconnect the cooler refrigerant discharge hose No. 1.
(b) Remove the O–ring from the cooler refrigerant discharge hose No. 1.

NOTICE:
Seal the opening of the disconnected parts using vinyl tape to prevent moisture and foreign matter from entering.

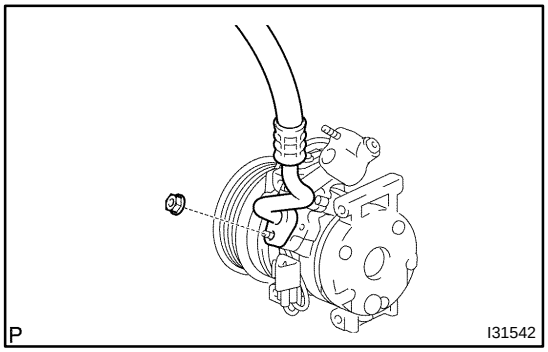

5. **DISCONNECT COOLER REFRIGERANT SUCTION HOSE NO.1**

(a) Remove the nut and disconnect the cooler refrigerant suction hose No. 1.
(b) Remove the O–ring from the cooler refrigerant suction hose No. 1.

NOTICE:
Seal the opening of the disconnected parts using vinyl tape to prevent moisture and foreign matter from entering.

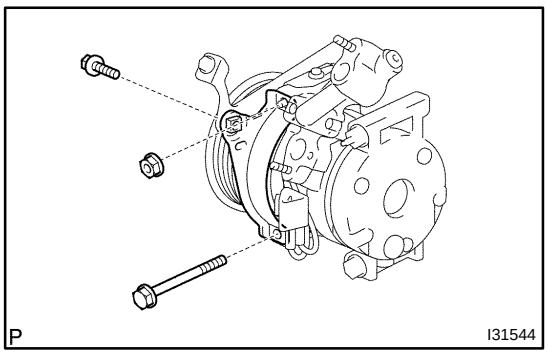

6. **REMOVE COMPRESSOR AND MAGNETIC CLUTCH**

(a) Disconnect the connector and clamp.
(b) Remove the 2 bolts, nut and cooler compressor bracket.

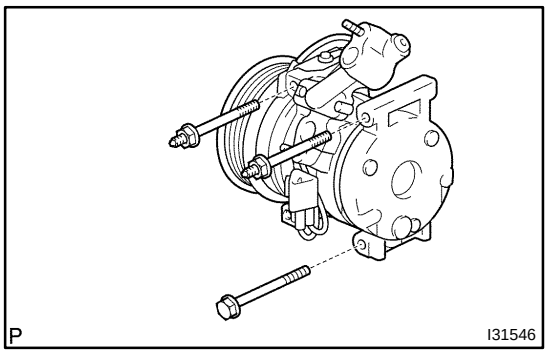

(c) Remove the 3 bolts and compressor and magnetic clutch.

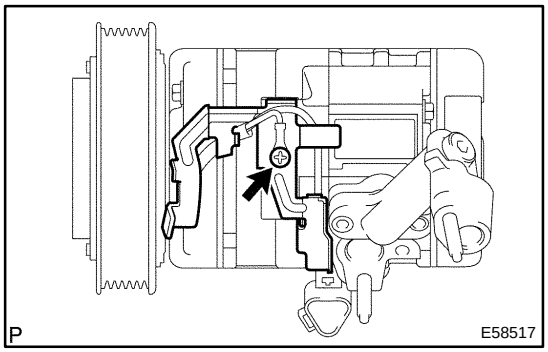

7. REMOVE COOLER COMPRESSOR BRACKET

(a) Remove the screw, earth wire and cooler compressor bracket.

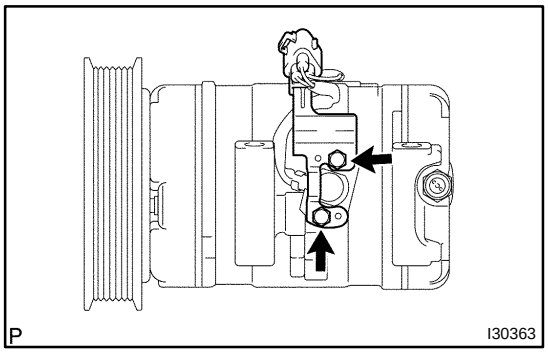

8. REMOVE MAGNET CLUTCH ASSY

(a) Remove the bolt and bracket.
(b) Place the compressor and magnetic clutch in vise.

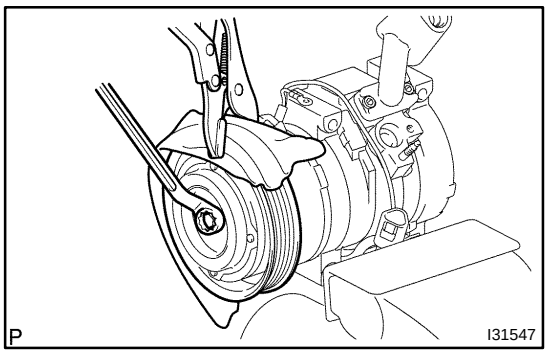

(c) Using a vise pliers, hold the magnet clutch hub.
(d) Remove the bolt, magnet clutch hub and magnet clutch washer.

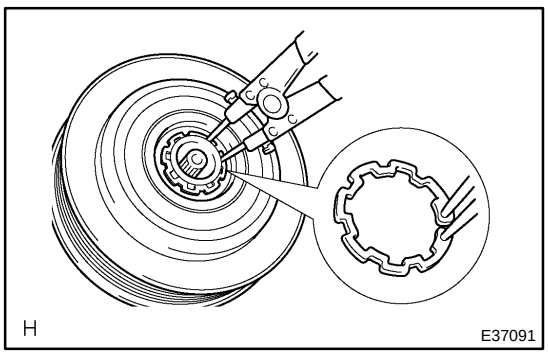

(e) Using a snap ring expander, remove the snap ring and magnet clutch rotor.
(f) Disconnect the connector.

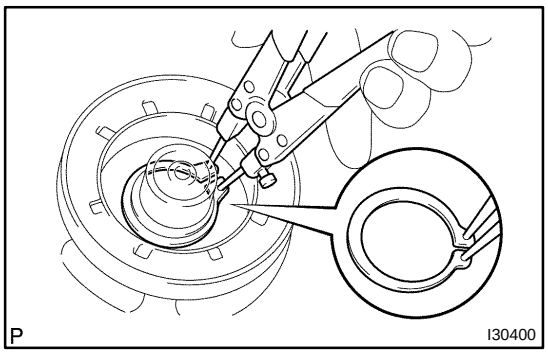

(g) Using a snap ring expander, remove the snap ring and magnet clutch starter.

9. REMOVE COOLER COMPRESSOR ASSY

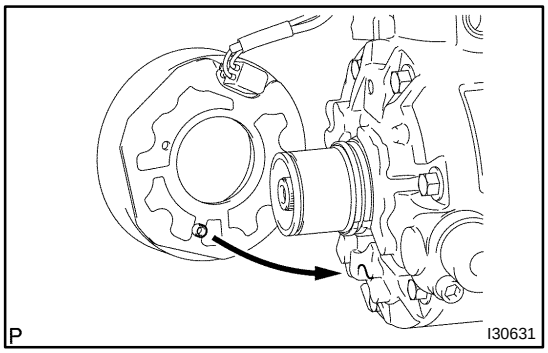

10. INSTALL MAGNET CLUTCH ASSY

(a) Matching the parts shown in the illustration, install the magnet clutch starter.

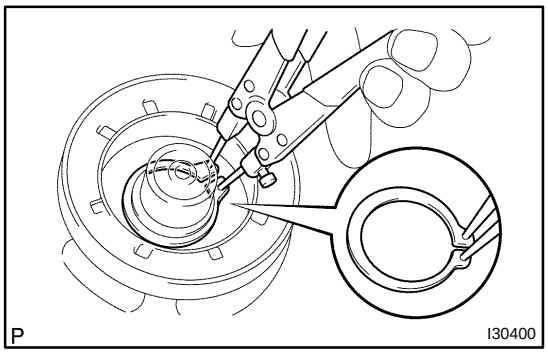

(b) Using a snap ring expander, install a new snap ring with the chamfered side facing up.
(c) Connect the connector.

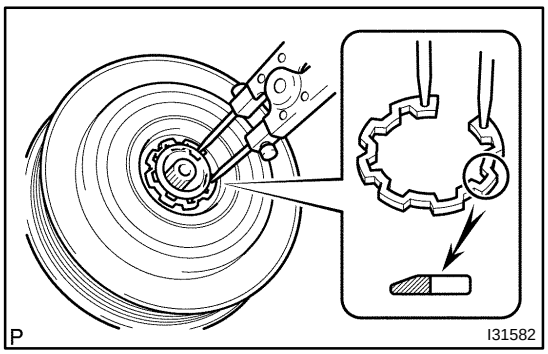

(d) Using a snap ring expander, install the magnet clutch rotor and a new snap ring with the chamfered side facing up.
(e) Install the magnet clutch washer and magnet clutch hub.

NOTICE:
Do not change the combination of the magnet clutch washers used before disassembly.

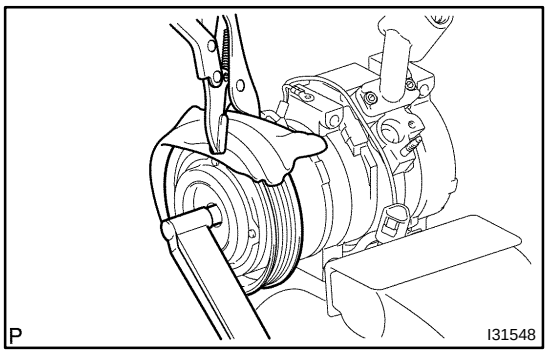

(f) Using a vise pliers, hold the magnet clutch hub and install the bolt.
Torque: 18 N·m (184 kgf·cm, 13 ft·lbf)

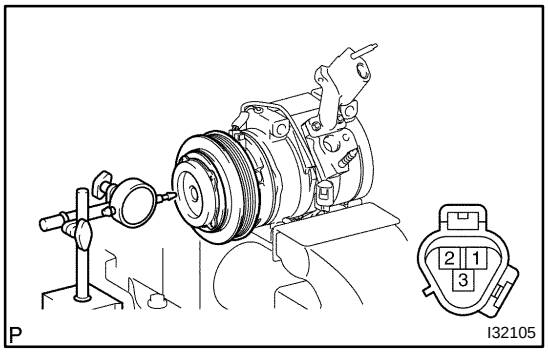

11. INSPECT MAGNETIC CLUTCH CLEARANCE

(a) Set the dial indicator to the magnet clutch hub.

(b) Connect the battery positive lead to the terminal 3 of magnet clutch connector and the negative lead to the earth wire. Turn on and off the magnet clutch and measure the clearance.
Standard clearance:
0.35 – 0.60 mm (0.014 – 0.024 in.)

If the measured value is out of the standard range, remove the magnet clutch hub and adjust it with magnet clutch washers.

NOTICE:
Adjustment shall be performed with 3 or less magnet clutch washers.

(c) Remove the compressor and magnetic clutch from the vise.

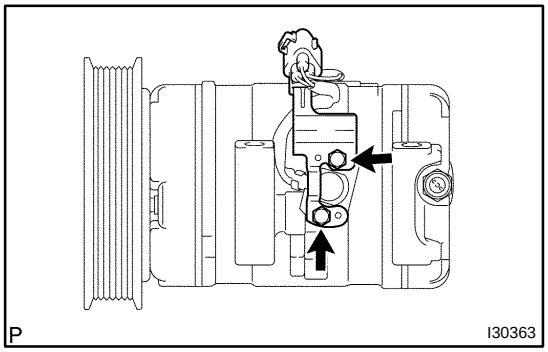

(d) Install the bolt and bracket.

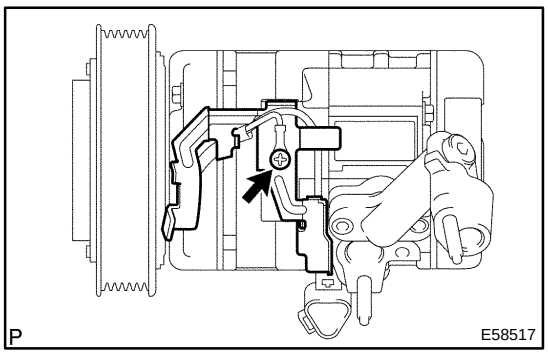

12. INSTALL COOLER COMPRESSOR BRACKET

(a) Install the earth wire and cooler compressor bracket with the screw.

13. INSPECT COMPRESSOR OIL

(a) When replacing the compressor and magnetic clutch with new one, after gradually removing the refrigerant gas from the service valve, drain the following amount of oil from the new compressor and magnetic clutch before installation.

Standard:

(Oil capacity inside new compressor and magnetic clutch: 120 + 15 cc (4.1 +0.51 fl.oz.)) – (Remaining oil amount in the removed compressor and magnetic clutch) = (Oil amount to be removed when replacing)

NOTICE:

- **When checking the compressor oil level, observe the precautions on the cooler removal/installation.**
- **Because compressor oil remains in the pipes of the vehicle, if a new compressor and magnetic clutch is installed without removing some oil inside, the oil amount becomes too much, preventing heat exchange in the refrigerant cycle and causing refrigerant failure.**
- **If the remaining oil in the removed compressor and magnetic clutch is too small in volume, check for oil leakage.**
- **Be sure to use ND–OIL8 for compressor oil.**

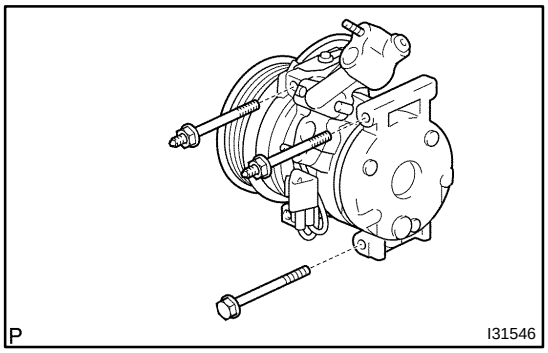

14. TEMPORARY TIGHTEN COMPRESSOR AND MAGNETIC CLUTCH

(a) Temporarily the compressor and magnetic clutch with the 3 bolts.

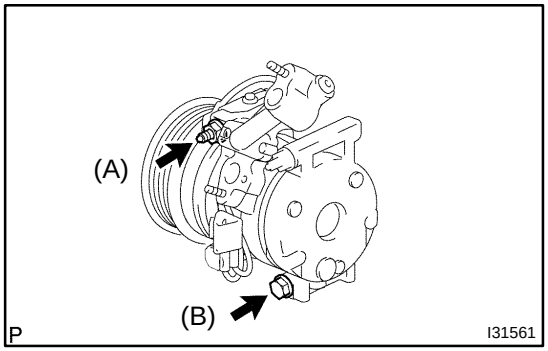

15. FULLY TIGHTEN COMPRESSOR AND MAGNETIC CLUTCH

(a) Tighten the compressor and magnetic clutch with the bolt (A) and bolt (B).

Torque: 25 N·m (250 kgf·cm, 18 ft·lbf)

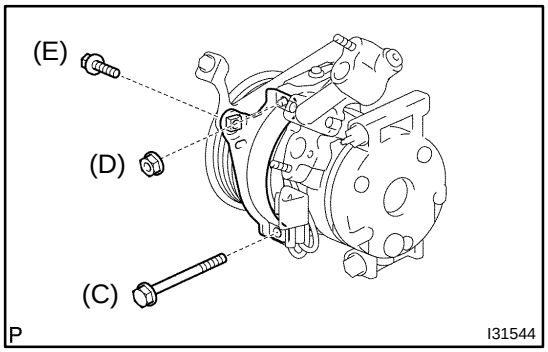

(b) Install the cooler compressor bracket with the 2 bolts and nut.

Torque:

25 N·m (250 kgf·cm, 18 ft·lbf) (Bolt (C))

25 N·m (250 kgf·cm, 18 ft·lbf) (Nut (D))

18 N·m (184 kgf·cm, 13 ft·lbf) (Bolt (E))

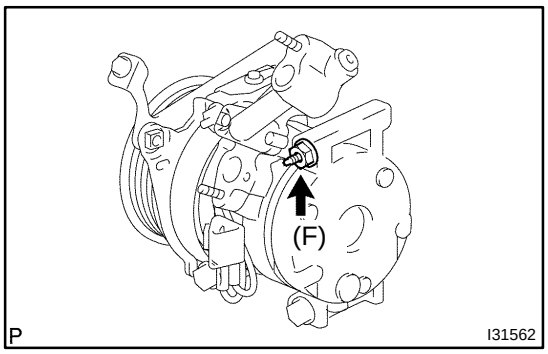

(c) Tighten the compressor and magnetic clutch with the bolt (F).
Torque: 25 N·m (250 kgf·cm, 18 ft·lbf)
(d) connect the connector.

16. INSTALL COOLER REFRIGERANT SUCTION HOSE NO.1

(a) Remove the attached vinyl tape from the hose.
(b) Sufficiently apply compressor oil to the new O–ring and fit surface of the compressor and magnetic clutch.
Compressor oil: ND–OIL 8 or equivalent
(c) Install a O–ring to the cooler refrigerant suction hose No. 1.

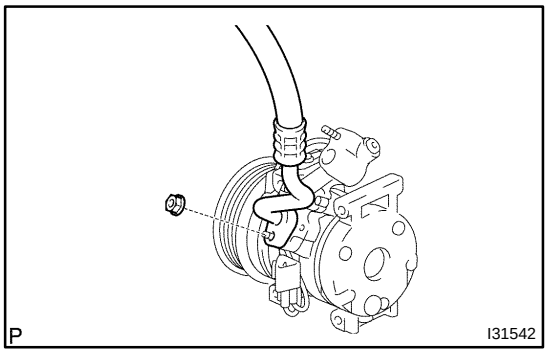

(d) Install the cooler refrigerant suction hose No. 1 to the compressor and magnetic clutch with the nut.
Torque: 9.8 N·m (100 kgf·cm,87 in.·lbf)

17. INSTALL COOLER REFRIGERANT DISCHARGE HOSE NO.1

(a) Remove the attached vinyl tape from the hose.
(b) Sufficiently apply compressor oil to the new O–ring and fit surface of the compressor and magnetic clutch.
Compressor oil: ND–OIL 8 or equivalent
(c) Install a O–ring to the cooler refrigerant discharge hose No.1.

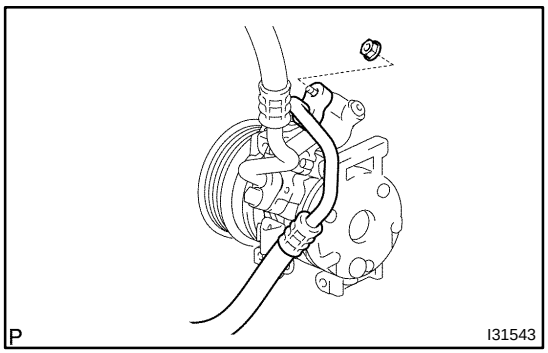

(d) Install the cooler refrigerant discharge hose No. 1 to the compressor and magnetic clutch with the nut.
Torque: 9.8 N·m (100 kgf·cm,87 in.·lbf)

18. INSTALL GENERATOR ASSY
(See page 19–33)
19. INSTALL V (COOLER COMPRESSOR TO CRANKSHAFT PULLEY) BELT NO.1
(See page 55–21)
20. CHARGE REFRIGERANT (See page 55–18)
SST 07110–58060 (07117–58060, 07117–58070, 07117–58080, 07117–58090, 07117–78050, 07117–88060, 07117–88070, 07117–88080)
21. WARM UP ENGINE
22. INSPECT LEAKAGE OF REFRIGERANT (See page 55–18)

COOLER COMPRESSOR ASSY (2AZ–FE)

COMPONENTS

550C6–01

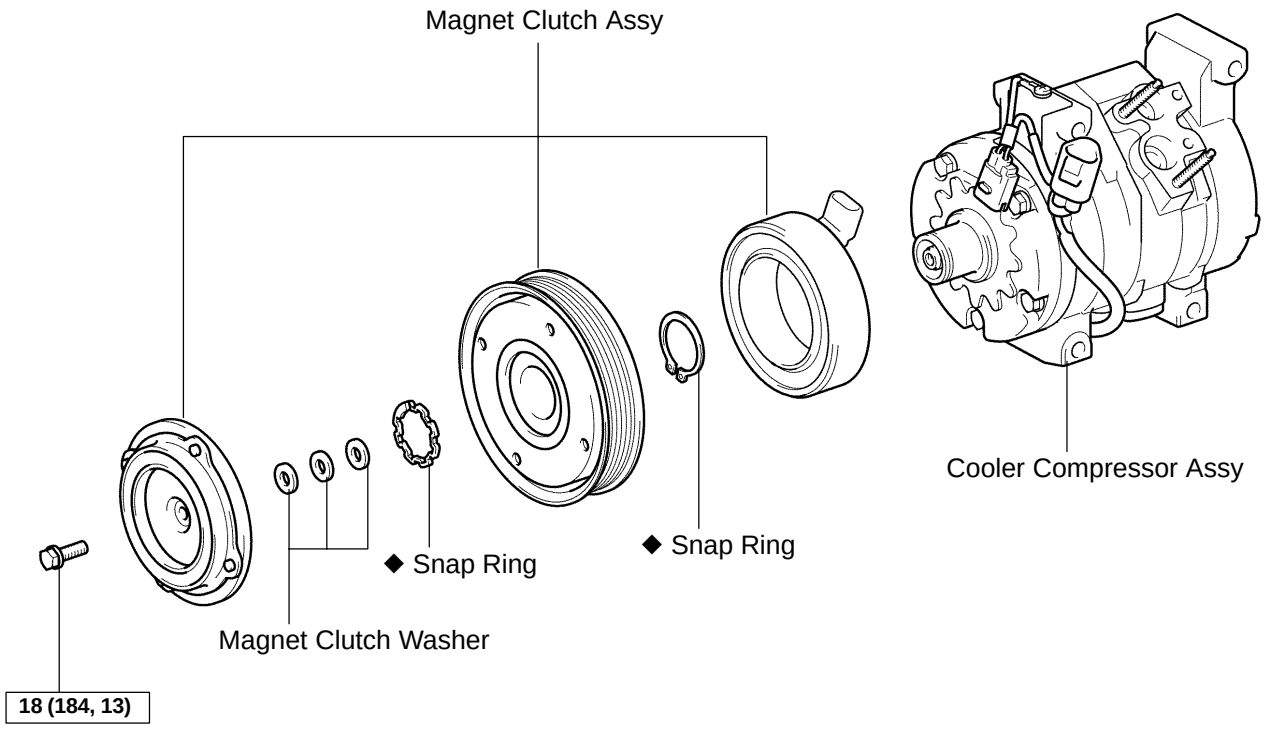

N·m (kgf·cm, ft·lbf) : Specified torque

◆ Non–reusable part

P

I31629

550C7–01

REPLACEMENT

HINT:

COMPONENTS: See page 55–56

1. **DISCHARGE REFRIGERANT FROM REFRIGERATION SYSTEM (See page 55–18)**
   SST 07110–58060 (07117–58080, 07117–58090, 07117–78050, 07117–88060, 07117–88070, 07117–88080)
2. **REMOVE FAN AND GENERATOR V BELT (See page 14–5)**
   SST 09249–63010
3. **REMOVE GENERATOR ASSY (See page 19–13)**

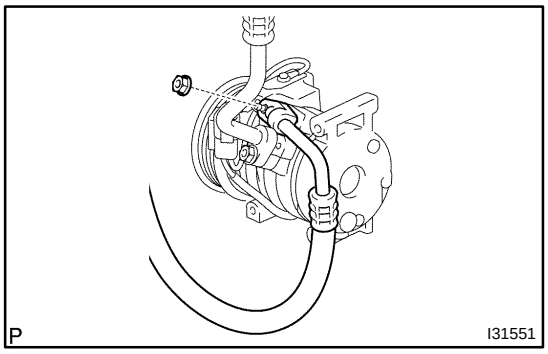

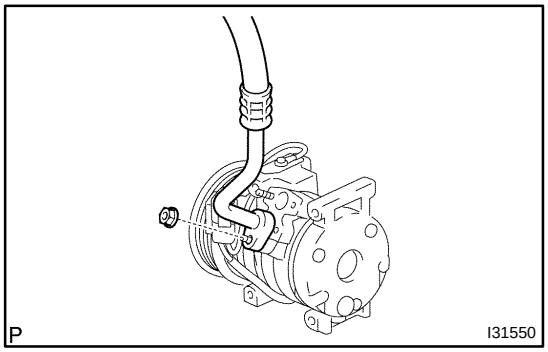

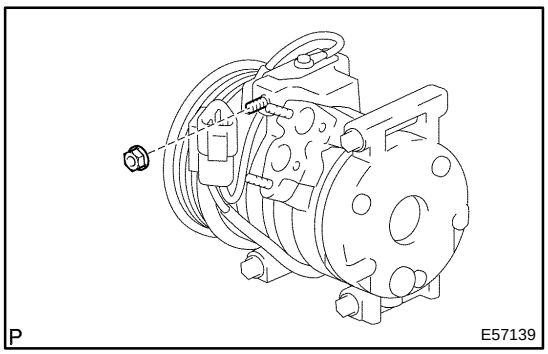

4. **DISCONNECT COOLER REFRIGERANT DISCHARGE HOSE NO.1**

(a) Remove the nut and disconnect the cooler refrigerant discharge hose No. 1.
(b) Remove the O–ring from the cooler refrigerant discharge hose No. 1.

NOTICE:
Seal the opening of the disconnected parts using vinyl tape to prevent moisture and foreign matter from entering.

5. **DISCONNECT COOLER REFRIGERANT SUCTION HOSE NO.1**

(a) Remove the nut and disconnect the cooler refrigerant suction hose No. 1.
(b) Remove the O–ring from the cooler refrigerant suction hose No. 1.

NOTICE:
Seal the opening of the disconnected parts using vinyl tape to prevent moisture and foreign matter from entering.

6. **REMOVE COMPRESSOR AND MAGNETIC CLUTCH**

(a) Disconnect the connector.
(b) Remove the nut.

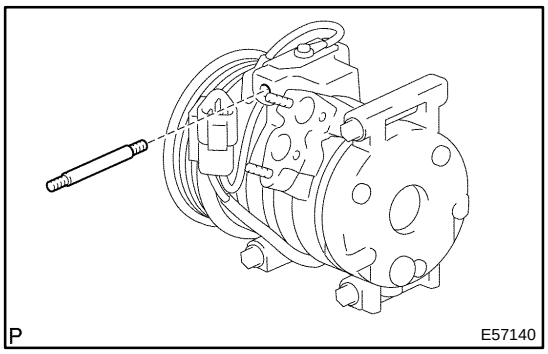

(c) Using a torque socket wrench (E8), remove the bolt.

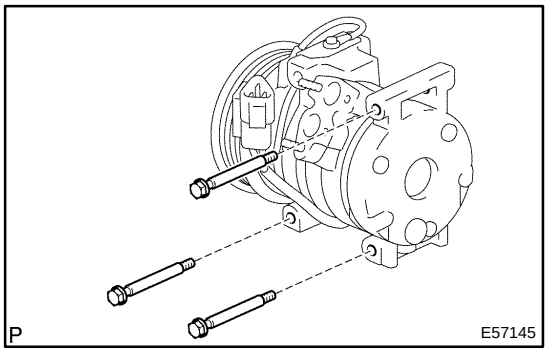

(d) Remove the 3 bolts and compressor and magnetic clutch.

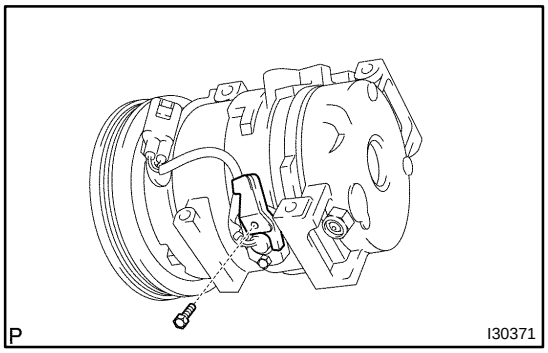

7. REMOVE MAGNET CLUTCH ASSY

(a) Remove the bolt and bracket.
(b) Place the compressor and magnetic clutch in vise.

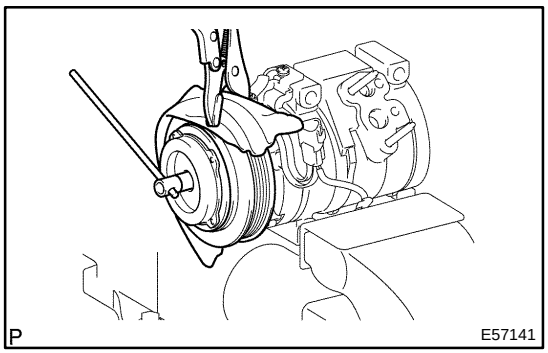

(c) Using a vise pliers, hold the magnet clutch hub.
(d) Remove the bolt, magnet clutch hub and magnet clutch washer.

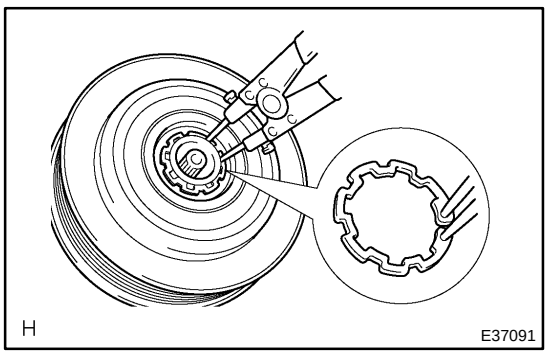

(e) Using a snap ring expander, remove the snap ring and magnet clutch rotor.
(f) Disconnect the connector.

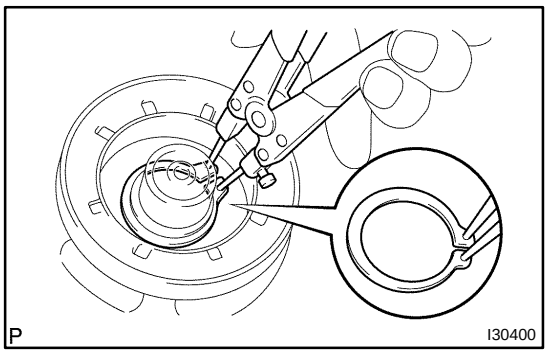

(g) Using a snap ring expander, remove the snap ring and magnet clutch starter.

8. REMOVE COOLER COMPRESSOR ASSY

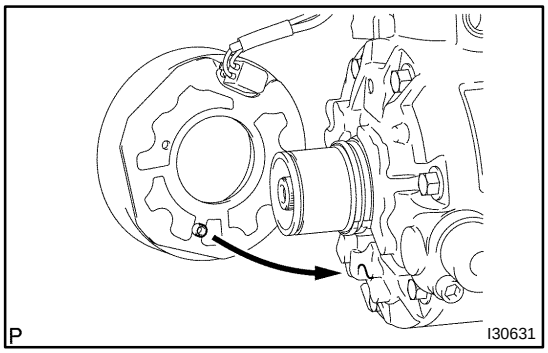

9. INSTALL MAGNET CLUTCH ASSY

(a) Matching the parts shown in the illustration, install the magnet clutch starter.

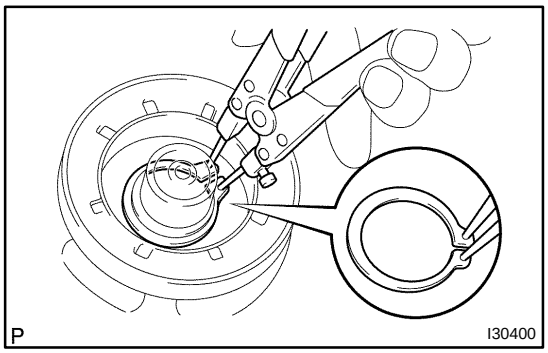

(b) Using a snap ring expander, install a new snap ring with the chamfered side facing up.
(c) Connect the connector.

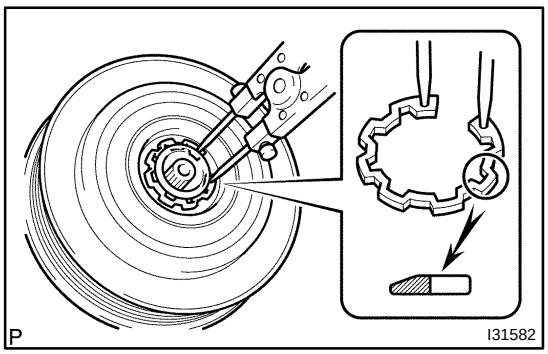

(d) Using a snap ring expander, install the magnet clutch rotor and a new snap ring with the chamfered side facing up.
(e) Install the magnet clutch washer and magnet clutch hub.

NOTICE:
Do not change the combination of the magnet clutch washers used before disassembly.

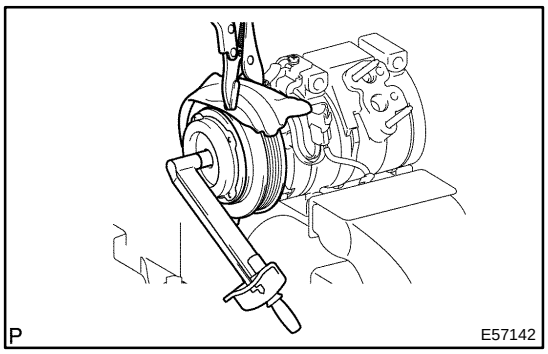

(f) Using a vise pliers, hold the magnet clutch hub and install the bolt.
Torque: 18 N·m (184 kgf·cm, 13 ft·lbf)

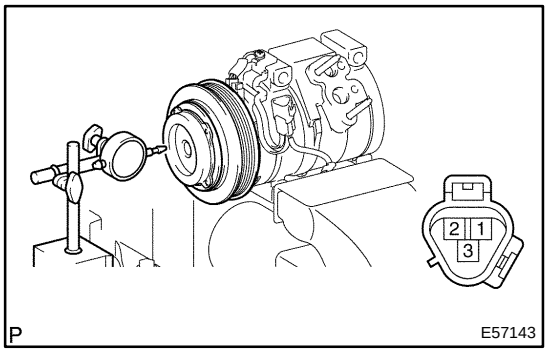

10. INSPECT MAGNETIC CLUTCH CLEARANCE

(a) Set the dial indicator to the magnet clutch hub.

(b) Connect the battery positive lead to the terminal 3 of magnet clutch connector and the negative lead to the earth wire. Turn on and off the magnet clutch and measure the clearance.
Standard clearance:
0.35 – 0.60 mm (0.014 – 0.024 in.)

If the measured value is out of the standard range, remove the magnet clutch hub and adjust it with magnet clutch washers.

NOTICE:
Adjustment shall be performed with 3 or less magnet clutch washers.

(c) Remove the compressor and magnetic clutch from the vise.

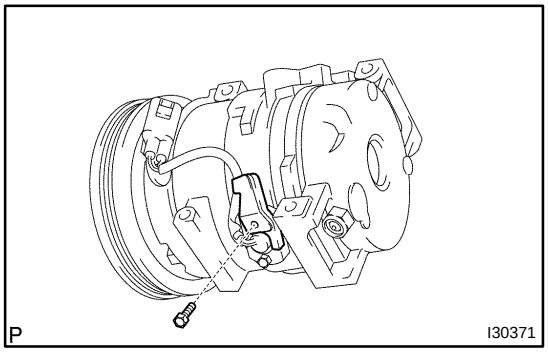

(d) Install the bolt and bracket.

11. INSPECT COMPRESSOR OIL

(a) When replacing the compressor and magnetic clutch with new one, after gradually removing the refrigerant gas from the service valve, drain the following amount of oil from the new compressor and magnetic clutch before installation.

Standard:

(Oil capacity inside new compressor and magnetic clutch: 120 + 15 cc (4.1 + 0.51 fl.oz.)) – (Remaining oil amount in the removed compressor and magnetic clutch) = (Oil amount to be removed when replacing)

NOTICE:

- **When checking the compressor oil level, observe the precautions on the cooler removal/installation.**
- **Because compressor oil remains in the pipes of the vehicle, if a new compressor and magnetic clutch is installed without removing some oil inside, the oil amount becomes too much, preventing heat exchange in the refrigerant cycle and causing refrigerant failure.**
- **If the remaining oil in the removed compressor and magnetic clutch is too small in volume, check for oil leakage.**
- **Be sure to use ND–OIL8 for compressor oil.**

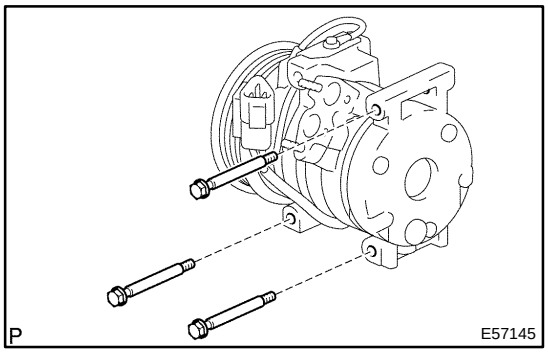

12. TEMPORARY TIGHTEN COMPRESSOR AND MAGNETIC CLUTCH

(a) Temporarily the compressor and magnetic clutch with the 3 bolts.

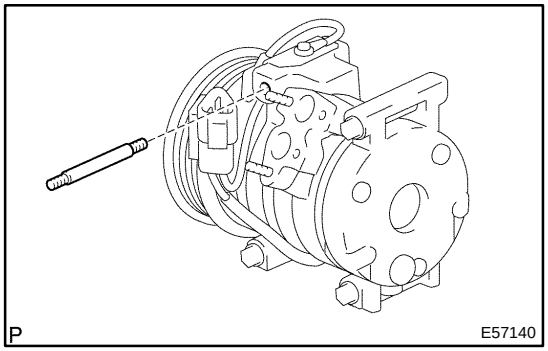

13. FULLY TIGHTEN COMPRESSOR AND MAGNETIC CLUTCH

(a) Using a torque socket wrench (E8), install the bolt.
Torque: 25 N·m (250 kgf·cm, 18 ft·lbf)

(b) Tighten the compressor and magnetic clutch with the 3 bolts and nut.
Torque: 25 N·m (250 kgf·cm, 18 ft·lbf)

(c) Connect the connector.

NOTICE:

Tighten the bolts and nuts in following order shown in the illustration to install the compressor magnetic clutch.

14. INSTALL COOLER REFRIGERANT SUCTION HOSE NO.1

(a) Remove the attached vinyl tape from the hose.

(b) Sufficiently apply compressor oil to the new O–ring and fit surface of the compressor and magnetic clutch.
Compressor oil: ND–OIL 8 or equivalent

(c) Install a O–ring to the cooler refrigerant suction hose No. 1.

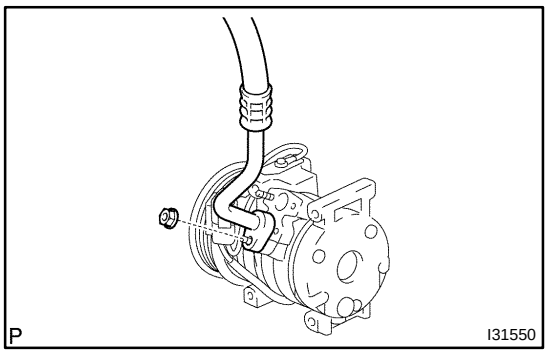

(d) Install the cooler refrigerant suction hose No. 1 to the compressor and magnetic clutch with the nut .
Torque: 9.8 N·m (100 kgf·cm, 87 in.·lbf)

15. INSTALL COOLER REFRIGERANT DISCHARGE HOSE NO.1

(a) Remove the attached vinyl tape from the hose.
(b) Sufficiently apply compressor oil to the new O–ring and fit surface of the compressor and magnetic clutch.
Compressor oil: ND–OIL 8 or equivalent
(c) Install a O–ring to the cooler refrigerant discharge hose No. 1.

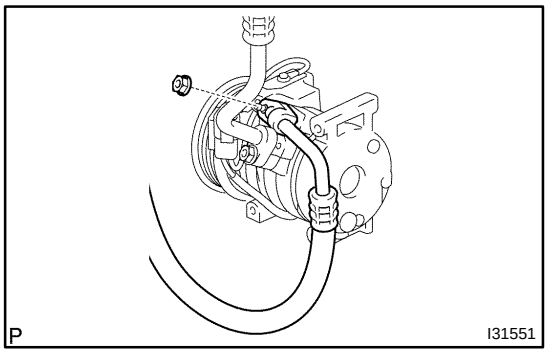

(d) Install the cooler refrigerant discharge hose No. 1 to the compressor and magnetic clutch with the nut.
Torque: 9.8 N·m (100 kgf·cm, 87 in.·lbf)

16. INSTALL GENERATOR ASSY
(See page 19–13)
17. INSTALL FAN AND GENERATOR V BELT
(See page 14–5)
SST 09249–63010
18. CHARGE REFRIGERANT (See page 55–18)
SST 07110–58060 (07117–58060, 07117–58070, 07117–58080, 07117–58090, 07117–78050, 07117–88060, 07117–88070, 07117–88080)
Specified amount: 550 ± 50 g (19.37 ± 1.76 oz.)
19. WARM UP ENGINE
20. INSPECT LEAKAGE OF REFRIGERANT (See page 55–18)

COOLER CONDENSER ASSY

550C8–01

ON–VEHICLE INSPECTION

1. INSPECT COOLER CONDENSER ASSY

(a) If a fin of the cooler condenser assy is dirty, clean it with water and dry it with compressor air.

NOTICE:

Do not damage the fin of the condenser assy.

(b) If a fin of the condenser assy is bent, make it straight using a screwdriver or pliers.

2. INSPECT CONDENSER FOR LEAKAGE OF REFRIGERANT

(a) Using a halogen leak detector, check pipe joints for gas leakage.

(b) If gas leakage is detected in a joint, check the torque of the joint.

550C9–01

COMPONENTS

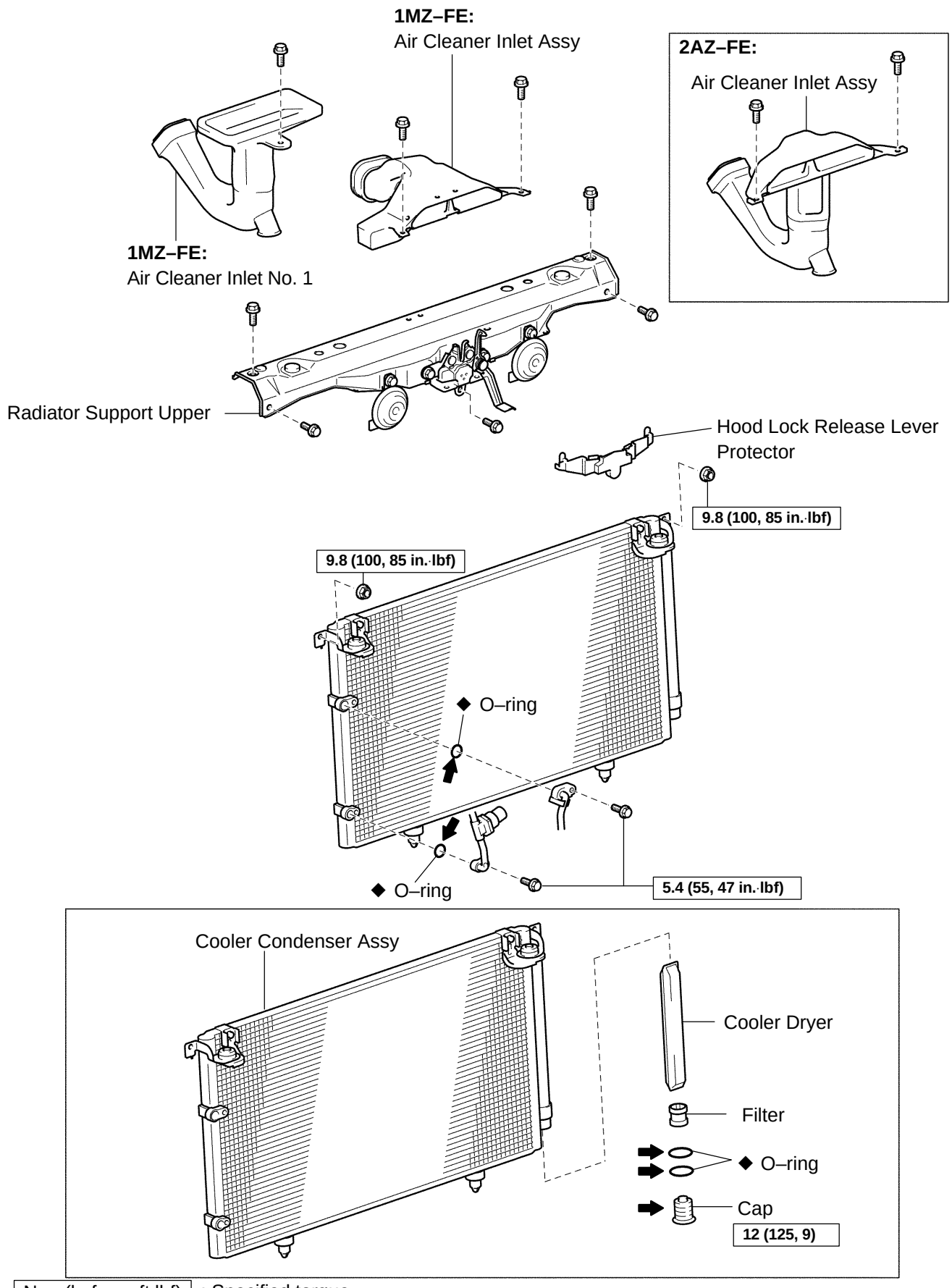

N·m (kgf·cm, ft·lbf) : Specified torque

⬅ Compressor oil ND–OIL 8 or equivalent

◆ Non–reusable parts

I31559

550CA–01

OVERHAUL

HINT:

COMPONENTS: See page 55–64

1. DISCHARGE REFRIGERANT FROM REFRIGERATION SYSTEM (See page 55–18)

SST 07110–58060 (07117–58080, 07117–58090, 07117–78050, 07117–88060, 07117–88070, 07117–88080)

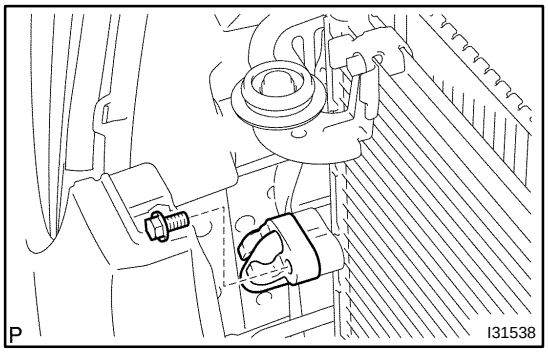

2. REMOVE COOLER REFRIGERANT DISCHARGE HOSE NO.1

(a) Remove the bolt and disconnect the cooler refrigerant discharge hose No. 1 from the cooler condenser assy.

(b) Remove the O–ring from the cooler refrigerant discharge hose No. 1.

NOTICE:

Seat the opening of the disconnected parts using vinyl tape to prevent moisture and foreign matter from entering.

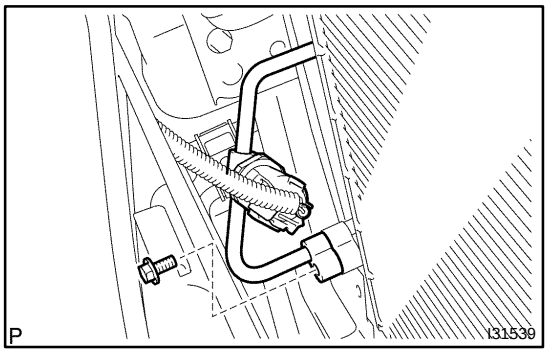

3. DISCONNECT COOLER REFRIGERANT LIQUID PIPE A

(a) Remove the bolt and disconnect the cooler refrigerant liquid pipe A from the cooler condenser assy.

(b) Remove the O–ring from the cooler refrigerant liquid pipe A.

NOTICE:

Seal the opening of the disconnected parts using vinyl tape to prevent moisture and foreign matter from entering.

4. REMOVE AIR CLEANER INLET ASSY

1MZ–FE: (See page 16–26)

2AZ–FE: (See page 16–12)

5. REMOVE RADIATOR SUPPORT UPPER

1MZ–FE: (See page 16–26)

2AZ–FE: (See page 16–12)

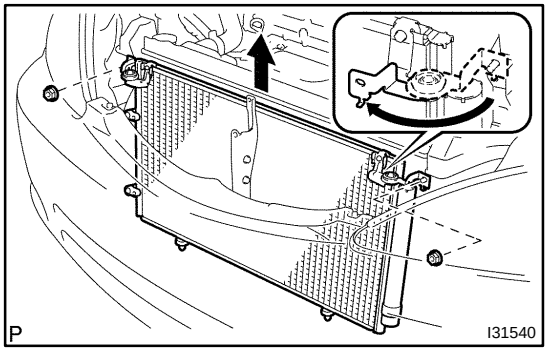

6. REMOVE COOLER CONDENSER ASSY

(a) Remove the 2 nuts and cooler condenser assy.

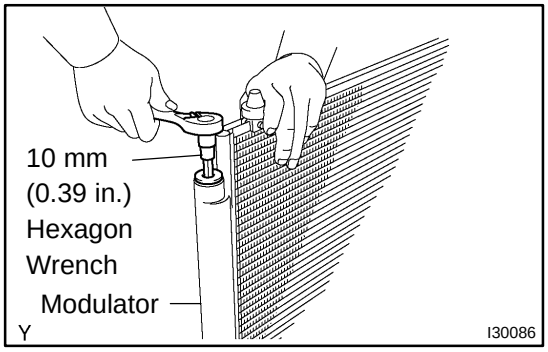

7. REMOVE COOLER DRYER

(a) Using hexagon wrench 10 mm (0.39 in.), remove the cap and filter from the modulator.

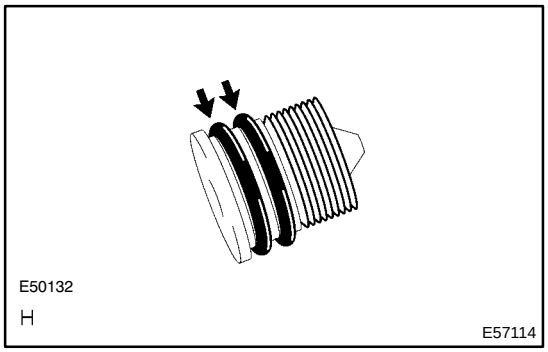

(b) Remove the 2 O–rings from the cap.

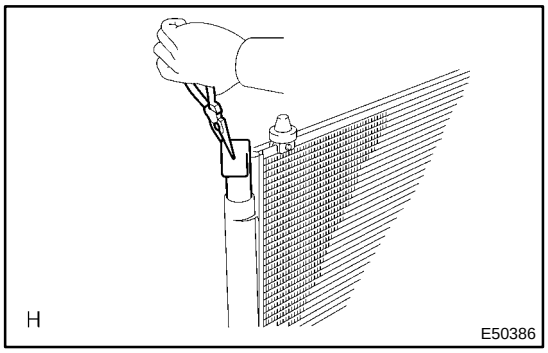

(c) Using a needle nose pliers, remove the cooler dryer.

8. INSTALL COOLER DRYER

(a) Using a needle nose pliers, install the cooler dryer.

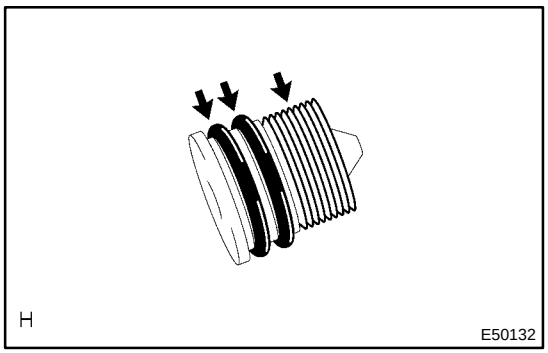

(b) Install 2 new O–rings to the cap.
(c) Sufficiently apply compressor oil to the fit surfaces of the O–ring and the cap.
Compressor oil: ND–OIL 8 or equivalent

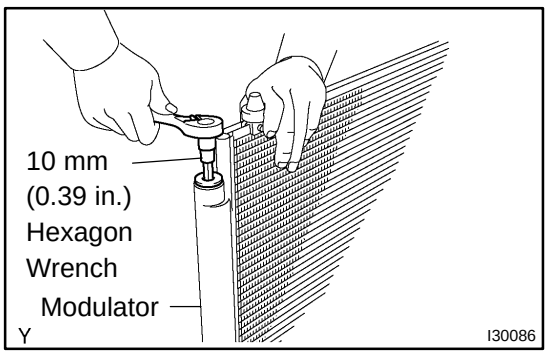

(d) Using hexagon wrench 10 mm (0.39 in.), install the cap to the cooler condenser assy.
Torque: 12 N·m (125 kgf·cm, 9 ft·lbf)

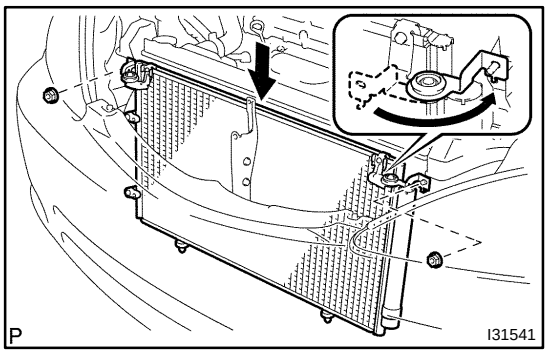

9. INSTALL COOLER CONDENSER ASSY

(a) Install the cooler condenser assy with the 2 nuts.
Torque: 9.8 N·m (100 kgf·cm, 85 in.·lbf)

10. INSTALL RADIATOR SUPPORT UPPER
1MZ–FE: (See page 16–26)
2AZ–FE: (See page 16–12)

11. INSTALL COOLER REFRIGERANT LIQUID PIPE A

(a) Remove the attached vinyl tape from the tube and connecting part of the cooler condenser assy.
(b) Sufficiently apply compressor oil to the new O–ring and pipe joint.
Compressor oil: ND–OIL 8 or equivalent
(c) Install a O–ring to the cooler refrigerant liquid pipe A.

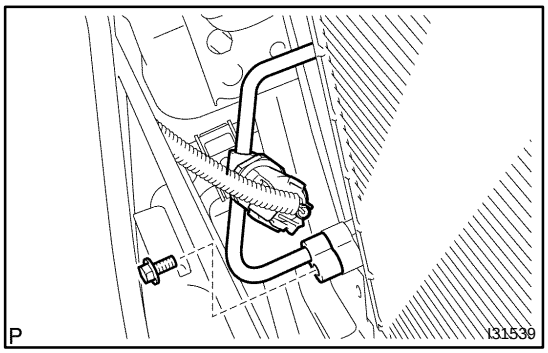

(d) Connect the cooler refrigerant liquid pipe A to the cooler condenser assy with the bolt.
Torque: 5.4 N·m (55 kgf·cm, 47 in.·lbf)

12. INSTALL COOLER REFRIGERANT DISCHARGE HOSE NO.1

(a) Remove the attached vinyl tape from the tube and connecting part of the cooler condenser assy.
(b) Sufficiently apply compressor oil to the new O–ring and hose joint.
Compressor oil: ND–OIL 8 or equivalent
(c) Install a O–ring to the cooler refrigerant discharge hose No. 1.

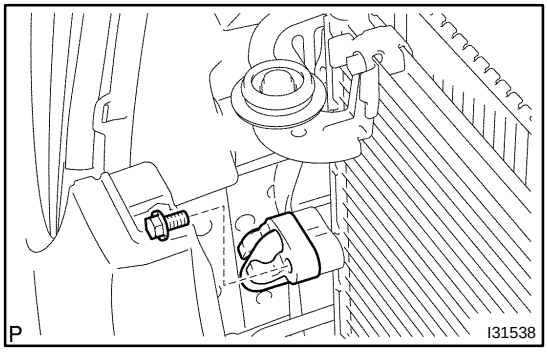

(d) Connect the cooler refrigerant discharge hose No. 1 to the cooler condenser assy with the bolt.
Torque: 5.4 N·m (55 kgf·cm, 47 in.·lbf)

13. CHARGE REFRIGERANT (See page 55–18)

SST 07110–58060 (07117–58060, 07117–58070, 07117–58080, 07117–58090, 07117–78050, 07117–88060, 07117–88070, 07117–88080)

Specified amount: 550 ± 50 g (19.37 ± 1.76 oz.)

14. WARM UP ENGINE

15. INSPECT LEAKAGE OF REFRIGERANT (See page 55–18)

SUPPLEMENTAL RESTRAINT SYSTEM

6008V–02

PRECAUTION

CAUTION:

- **The CAMRY is equipped with SRS, which comprises a driver airbag, front passenger airbag, side airbag and curtain shield airbag. Failure to carry out service operations in the correct sequence could cause the SRS to unexpectedly deploy during servicing, possibly leading to a serious accident. Further, if a mistake is made in servicing the SRS, it is possible that the SRS may fail to operate when required. Before performing servicing (including removal or installation of parts, inspection or replacement), be sure to read the following items carefully, then follow the correct procedures described in the repair manual.**
- **Work must be started 90 seconds after the ignition switch is turned to the "LOCK" position and the negative (–) terminal cable is disconnected from the battery.**
  (The SRS is equipped with a back–up power source so that if work is started within 90 seconds from disconnecting the negative (–) terminal cable of the battery, the SRS may be deployed.)
- **Do not expose the horn button assy, instr pnl pass l/door airbag assy, airbag sensor assy center, airbag front sensor, front seat airbag assy, side airbag sensor assy, curtain shield airbag assy, airbag sensor rear or seat position airbag sensor directly to hot air or flames.**

NOTICE:

- **Malfunction symptoms of the SRS are difficult to confirm, so the DTCs become the most important source of information when troubleshooting. When troubleshooting the SRS, always inspect the DTCs before disconnecting the battery.**
- **Even in cases of a minor collision where the SRS does not deploy, the horn button assy, instr pnl pass l/door airbag assy, airbag sensor assy center, airbag front sensor, front seat airbag assy, side airbag sensor assy, curtain shield airbag assy, airbag sensor rear and seat position airbag sensor should be inspected (See page 60–9).**
- **Before repairs, remove the airbag sensor if shocks are likely to be applied to the sensor during repairs.**
- **Never use SRS parts from another vehicle. When replacing parts, replace them with new parts.**
- **Never disassemble and repair the horn button assy, instr pnl pass l/door airbag assy, airbag sensor assy center, airbag front sensor, front seat airbag assy, side airbag sensor assy, curtain shield airbag assy or seat position airbag sensor in order to reuse it.**
- **If the horn button assy, instr pnl pass l/door airbag assy, airbag sensor assy center, airbag front sensor, front seat airbag assy, side airbag sensor assy, curtain shield airbag assy or seat position airbag sensor has been dropped, or if there are cracks, dents or other defects in the case, bracket or connector, replace it with new one.**
- **Use a volt/ohmmeter with high impedance (10 kΩ/V minimum) for troubleshooting the system's electrical circuits.**
- **Information labels are attached to the periphery of the SRS components. Follow the instructions on the notices.**
- **After work on the SRS is completed, perform the SRS warning light check (See page 05–691).**
- **When the negative (–) terminal cable is disconnected from the battery, the memory of the clock and audio system will be canceled. So before starting work, make a record of the contents memorized in the audio memory system. When work is finished, reset the audio systems as they were before and adjust the clock. To avoid erasing the memory in each memory system, never use a back–up power supply from outside the vehicle.**
- **If the vehicle is equipped with a mobile communication system, refer to the precaution in the INTRODUCTION section.**

1. SRS CONNECTORS

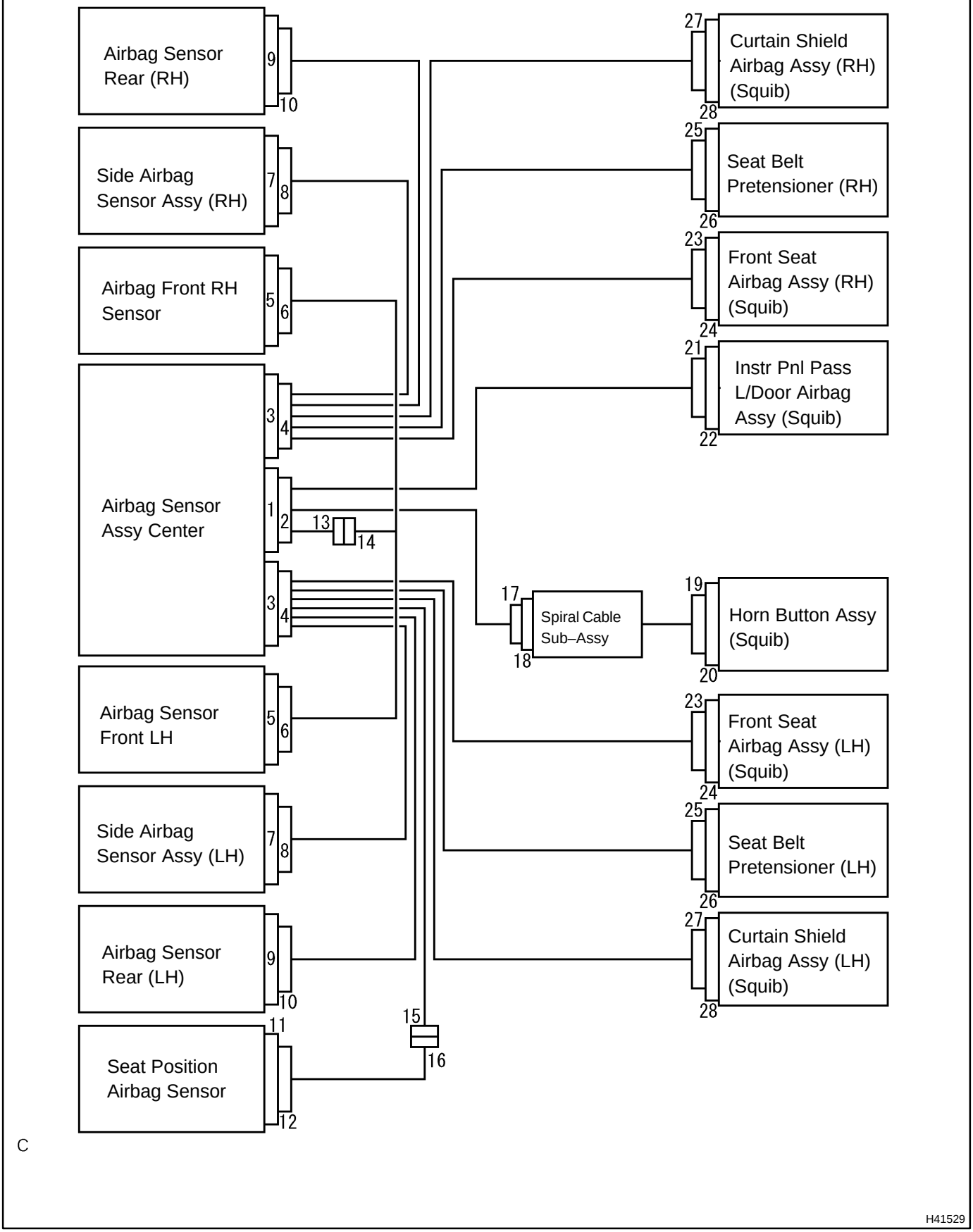

No.	Item	Application
(1)	Terminal Twin–Lock Mechanism	Connectors 2, 4, 6, 8, 10, 12, 13, 14, 15, 16, 17, 23, 24
(2)	Airbag Activation Prevention Mechanism	Connectors 2, 4, 18, 20, 22, 24, 26, 28
(3)	Electrical Connection Check Mechanism	Connectors 1, 2, 3, 4
(4)	Half Connection Prevention Mechanism	Connectors 6, 8, 10, 14, 23
(5)	Connector Lock Mechanism	Connectors 19, 21, 25, 27

(a) All connectors in the SRS are colored in yellow to distinguish them from other connectors. Connectors having special functions and specifically designed for the SRS are used in the locations shown on the previous page to ensure high reliability. These connectors use durable gold–plated terminals.

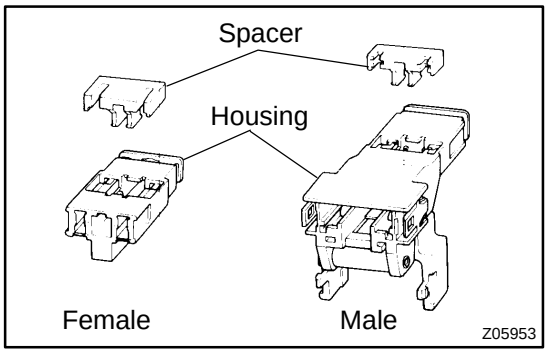

(1) Terminal twin–lock mechanism:
Each connector has a two–piece component consisting of a housing and a spacer. This design enables the terminal to be locked securely by two locking devices (the retainer and the lance) to prevent terminals from coming out.

(2) Airbag activation prevention mechanism:
Each connector contains a short spring plate. When the connector is disconnected, the short spring plate automatically connects positive (+) terminal and negative (–) terminal of the squib.

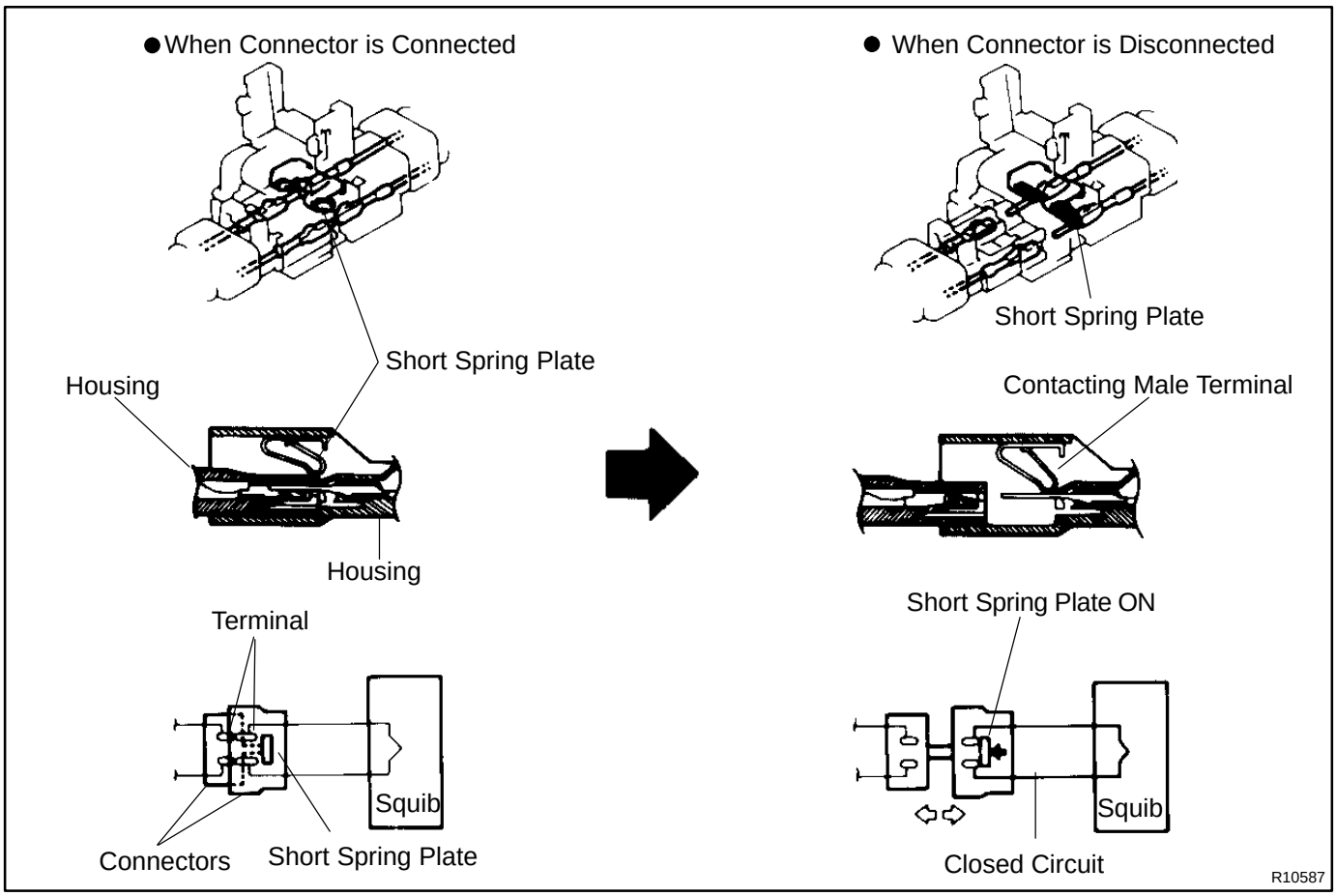

HINT:
The type of connector is shown in the diagram on the previous page.

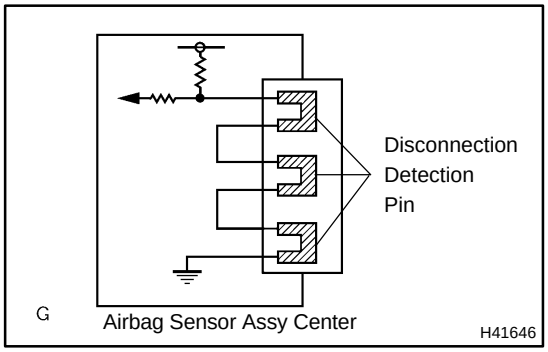

(3) Electrical connection check mechanism:
This mechanism electrically checks that connectors are connected correctly and completely. The electrical connection check mechanism is designed so that the disconnection detection pin connects with the diagnosis terminals when the connector housing lock is locked.

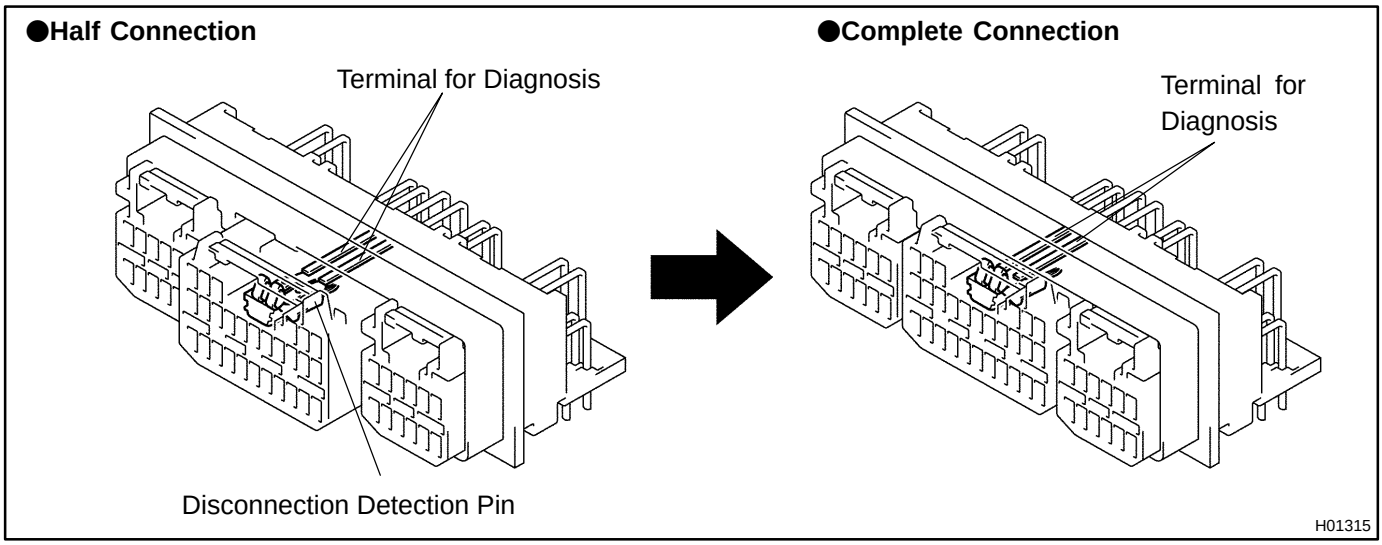

HINT:
The connectors shown in this illustration are connectors, ”1”, ”2”, ”3” and ”4” in step 8.

(4) Half connection prevention mechanism:
If the connector is not completely connected, the connector is disconnected due to the spring operation to the extent that no continuity exists.

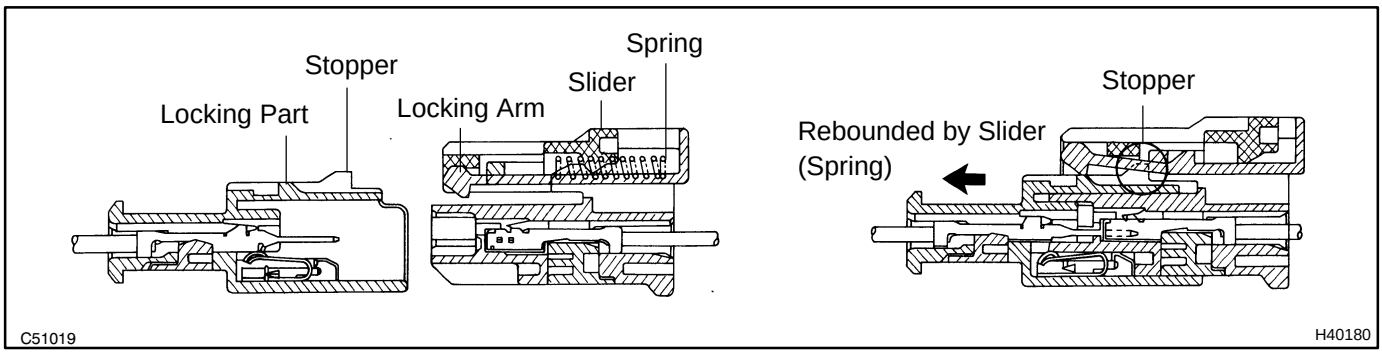

(5) Connector lock mechanism:
Locking the connector lock button securely connects the connector.

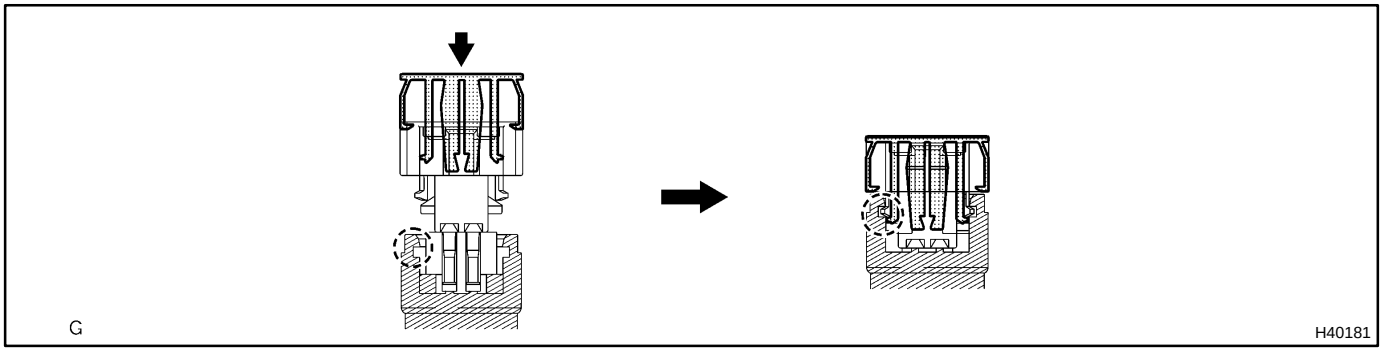

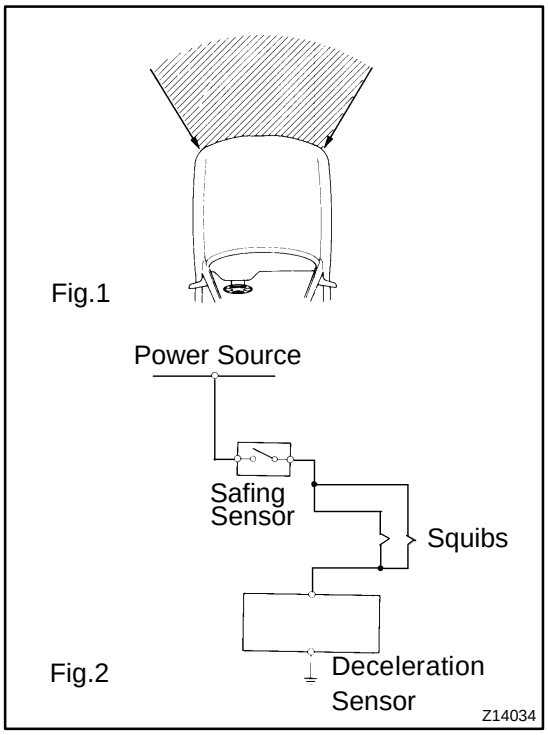

(b) When the vehicle is involved in a frontal collision in the hatched area (Fig. 1) and the shock is larger than the predetermined level, the SRS is activated automatically. A safing sensor is designed to go on at a smaller deceleration rate than the airbag sensor. As illustrated in Fig. 2, ignition is caused when current flows to the squib, which happens when a safing sensor and the deceleration sensor go on simultaneously. When a deceleration force acts on the sensors, 2 squibs in the driver airbag and front passenger airbag ignite and generate gas. The gas discharging into the driver airbag and front passenger airbag rapidly increases the pressure inside the bags, breaking open the horn button assy and instrument panel. Bag inflation then ends, and the bags deflate as the gas is discharged through discharge holes at the bag's rear or side.

2. DISCONNECTION OF CONNECTOR FRONT SEAT AIRBAG ASSY

(a) Place a finger on the slider.
(b) Slide the slider to release lock.
(c) Disconnect the connector.

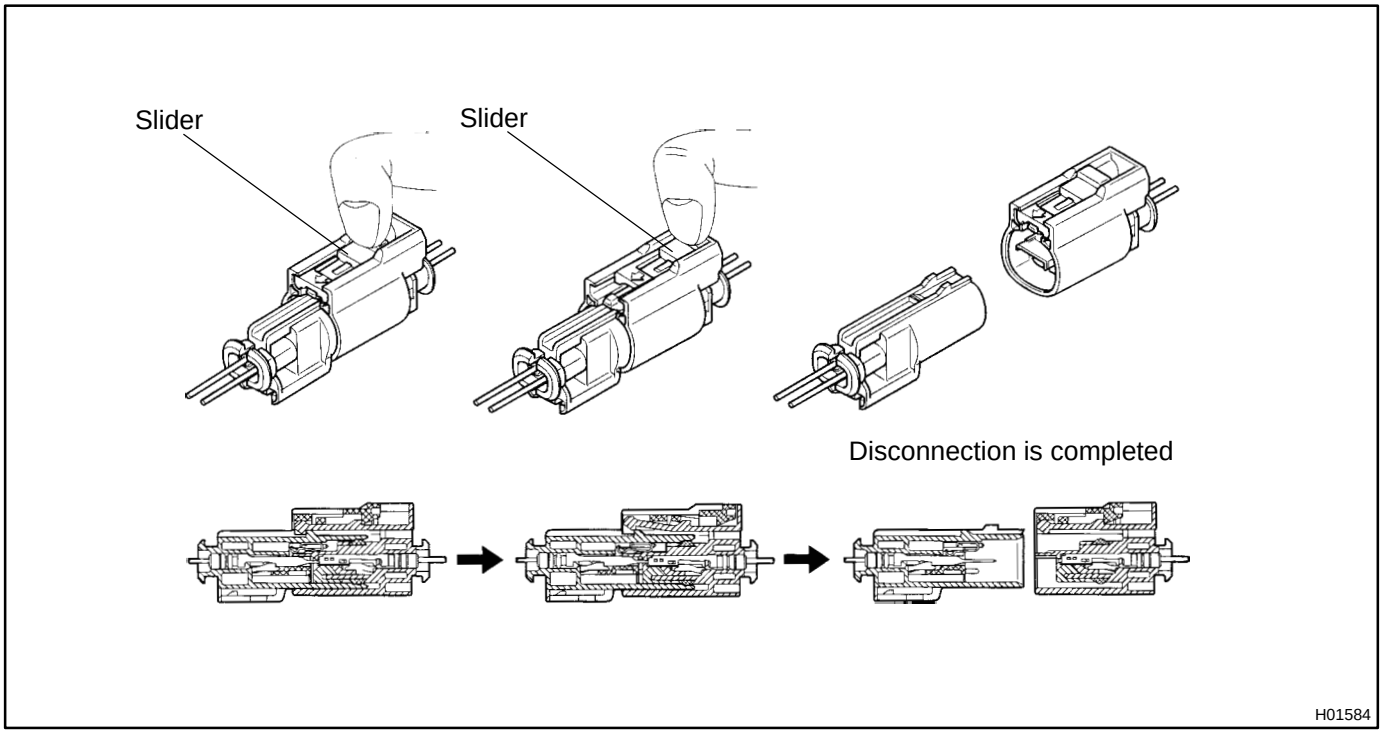

3. CONNECTION OF CONNECTOR FOR FRONT SEAT AIRBAG ASSY

(a) Align a lock part of male connector and a slider of female connector in the same direction as shown in the illustration, fit in them without rubbing.
(b) Be sure to insert until they are locked. After fitting in pull them slightly to check that they are locked. (When locked, make sure that the outer returns to its original position and sound at the time of fitting in can be heard.)

HINT:

- As the slider slides, do not touch it.
- Be careful not to deform the release board. If the release board is deformed, replace it with a new one.

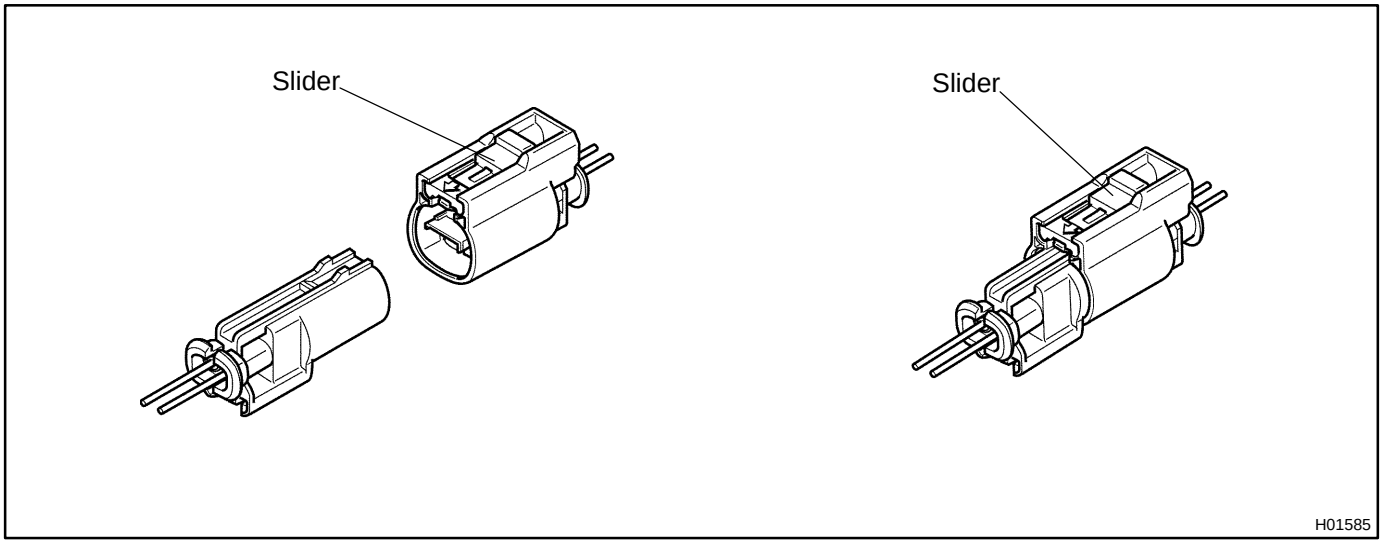

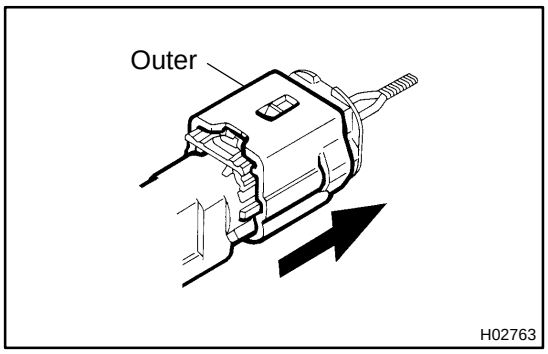

4. DISCONNECTION OF AIRBAG FRONT SENSOR, SIDE AIRBAG SENSOR AND AIRBAG SENSOR REAR CONNECTOR

(a) While holding both flank sides of the outer, slide the outer to the direction shown by an arrow.

(b) Lock of the connectors is released, then disconnect the connectors.

HINT:

Be sure to hold both flank sides of the outer. If holding the top and bottom sides, it will obstruct disconnection.

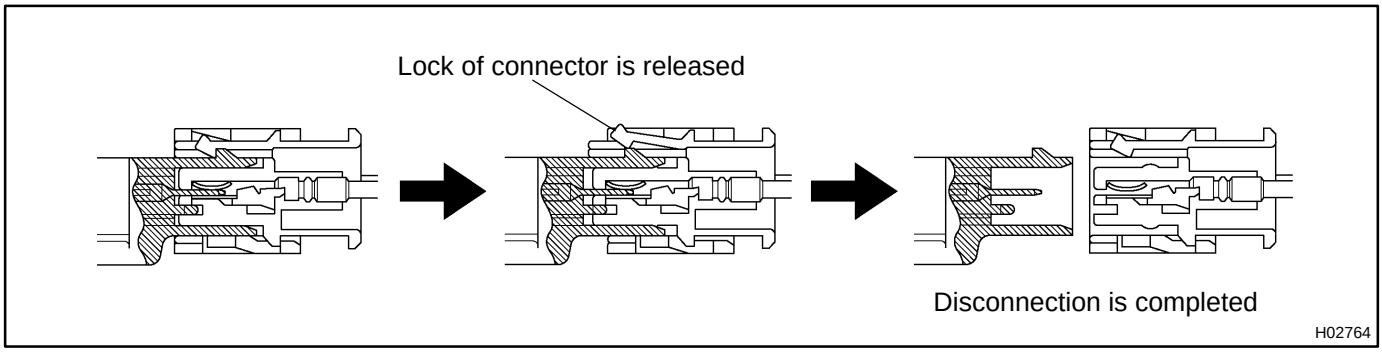

5. CONNECTION OF CONNECTORS FOR AIRBAG FRONT SENSOR, SIDE AIRBAG SENSOR AND AIRBAG SENSOR REAR

(a) Align the male connector (on the side of sensor) and female connector in the same direction as shown in the illustration and fit in them without rubbing.

(b) As they are fitted in, the outer slides rearward. Press it until the outer returns to its original position again.

If fitting stops half way, connectors will separate.

(c) Be sure to insert until they are locked. After fitting in, pull them slightly to check that they are locked. (When locked, make sure that the outer returns to its original position and sound at the time of fitting in can be heard.)

HINT:

- Do not fit in while holding the outer.
- When fitting in, the outer slides. Do not touch it.

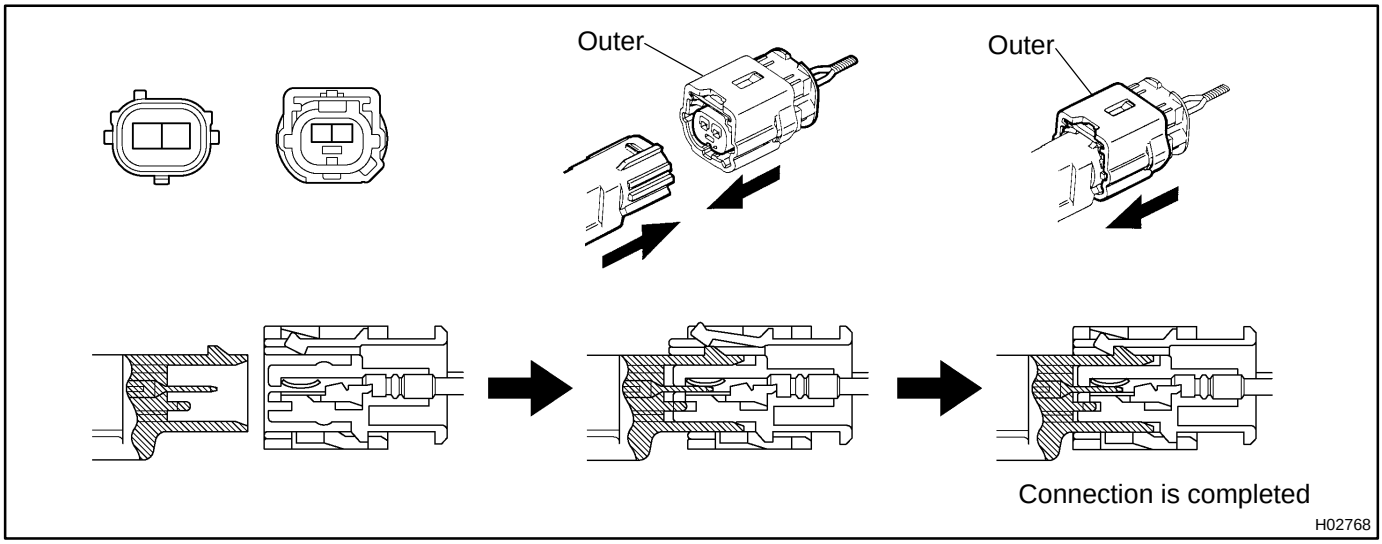

6. NOTICE REGARDING AIRBAG SENSOR INSTALLATION BOLT

(a) As the tightening torque is different depending on the property class of the airbag sensor installation bolt, choose a bolt referring to the following illustration and tighten with the specified tightening torque written in the repair manual.

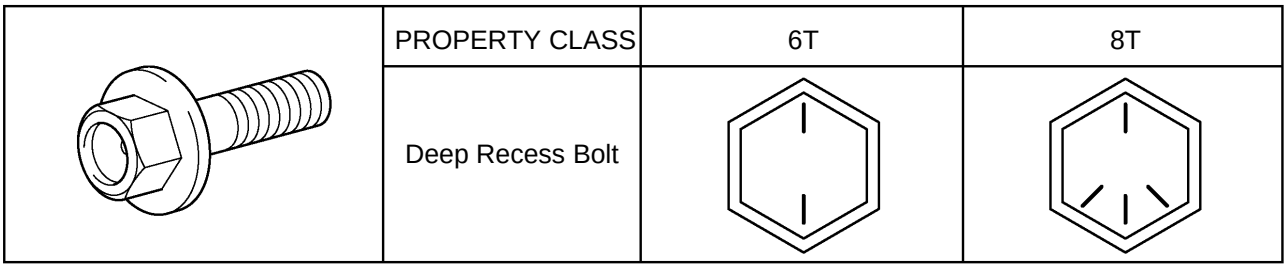

6007D–01

ON–VEHICLE INSPECTION

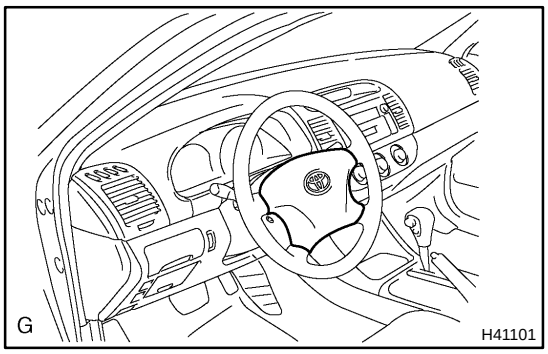

1. HORN BUTTON ASSY (VEHICLES NOT INVOLVED IN COLLISION)

(a) Do a diagnostic system check (See page 05–690).

(b) Do a visual check which includes the following item with the horn button assy (with airbag) installed in the vehicle. Check cuts, minute cracks or marked discoloration on the horn button assy top surface and in the grooved portion.

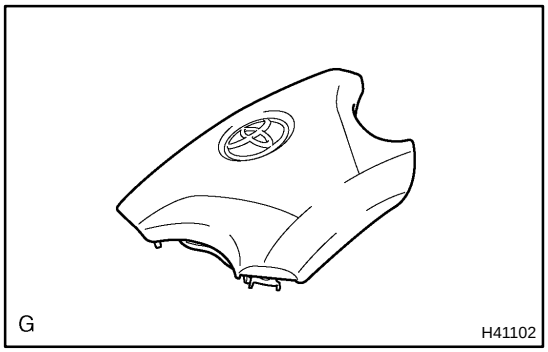

2. HORN BUTTON ASSY(VEHICLE INVOLVED IN COLLISION AND AIRBAG IS NOT DEPLOYED)

(a) Do a diagnostic system check (See page 05–690).

(b) Do a visual check which includes the following items with the horn button assy (with airbag) removed from the vehicle.

- Check cuts, minute cracks or marked discoloration on the horn button assy top surface and in the grooved portion.
- Check cuts and cracks in wire harness, and chipping in connectors.
- Check the deformation on the steering wheel.

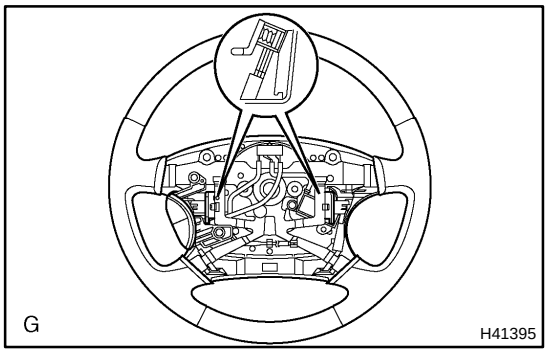

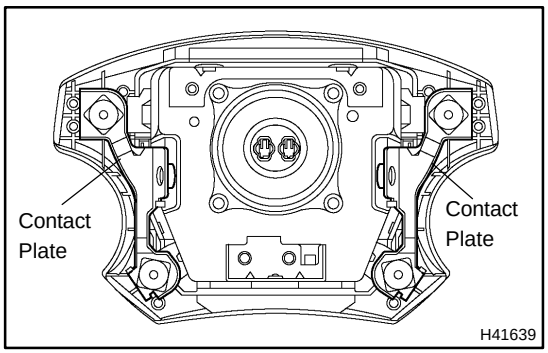

- Check the deformation on the horn button contact plate of the horn button assy.

HINT:

- If the horn button contact plate of the horn button assy is deformed, never repair it. Always replace the horn button assy with a new one.

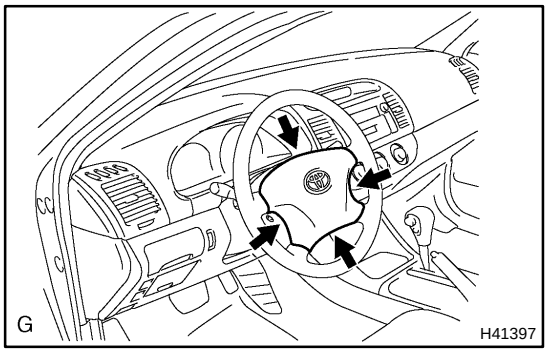

- There should be no interference between the horn button assy and steering wheel, and the clearance should be uniform all the way around when the new horn button assy is installed on the steering wheel.

CAUTION:

For removal and installation of the horn button assy, see page 60–15, and be sure to follow the correct procedure.

3. HORN BUTTON ASSY(VEHICLE INVOLVED IN COLLISION AND AIRBAG IS DEPLOYED)

(a) Do a diagnostic system check (See page 05–690).

(b) Do a visual check which includes the following item with the horn button assy (with airbag) removed from the vehicle.

Check the damage on the spiral cable connector and wire harness.

HINT:

There should be no interference between the horn button assy and steering wheel, and the clearance should be uniform all the way around when the new horn button assy is installed on the steering wheel.

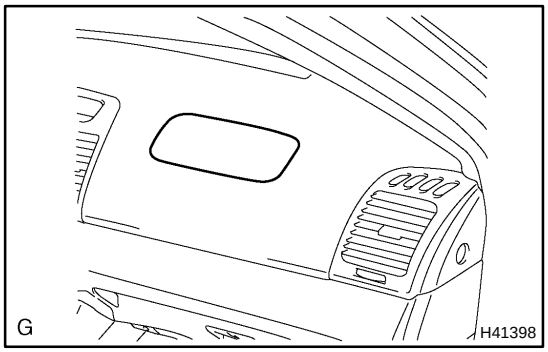

4. INSTR PNL PASS L/DOOR AIRBAG ASSY(VEHICLE NOT INVOLVED IN COLLISION)

(a) Do a diagnostic system check (See page 05–690).

(b) Do a visual check which includes the following item with the instr pnl pass l/door airbag assy installed in the vehicle.

Check cuts, minute cracks or marked discoloration on the instr pnl pass l/door airbag assy and instrument panel.

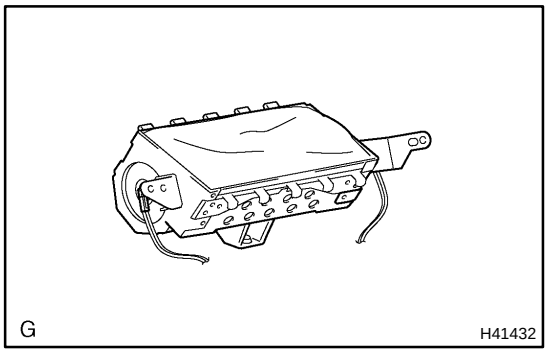

5. INSTR PNL PASS L/DOOR AIRBAG ASSY(VEHICLE INVOLVED IN COLLISION AND AIRBAG IS NOT DEPLOYED)

(a) Do a diagnostic system check (See page 05–690).

(b) Do a visual check which includes the following items with the instr pnl pass l/door airbag assy removed from the vehicle.

- Check cuts, minute cracks or marked discoloration on the instr pnl pass l/door airbag assy.
- Check cuts and cracks in wire harness, and for chipping in connectors.
- Check the deformation or cracks on the instrument panel and instrument panel reinforcement.

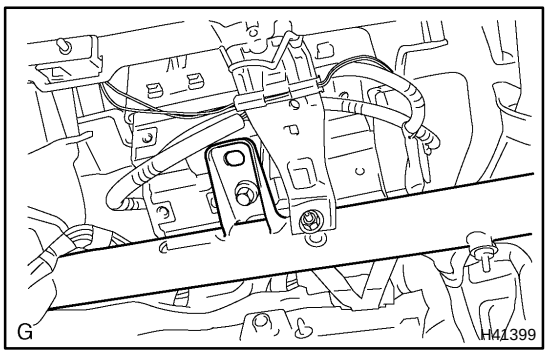

HINT:

If the instrument panel or instrument panel reinforcement is deformed or cracked, never repair it. Always replace it with a new one.

CAUTION:

For removal and installation of the instrument panel passenger airbag assy, see page 60–30, and be sure to follow the correct procedure.

6. INSTR PNL PASS L/DOOR AIRBAG ASSY(VEHICLE INVOLVED IN COLLISION AND AIRBAG IS DEPLOYED)

(a) Do a diagnostic system check (See page 05–690).

(b) Do a visual check which includes the following items with the instr pnl pass l/door airbag assy removed from the vehicle.

- Check the deformation or cracks on the instrument panel and instrument panel reinforcement.
- Check the damage on the connector and wire harness.

HINT:

If the instrument panel or instrument panel reinforcement is deformed or cracked, never repair it. Always replace it with a new one.

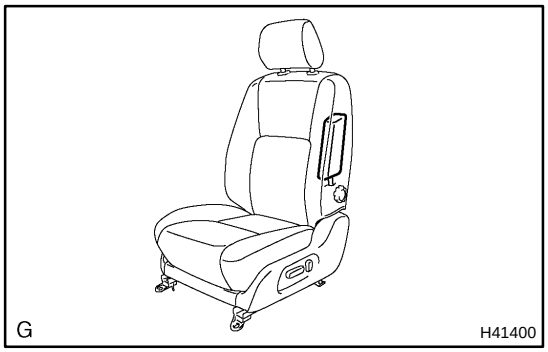

7. FRONT SEAT AIRBAG ASSY(VEHICLE NOT INVOLVED IN COLLISION)

(a) Do a diagnostic system check (See page 05–690).

(b) Do a visual check which includes the following item with the front seat airbag assy installed in the vehicle.
Check cuts, minute cracks or marked discoloration on the front passenger airbag assy and instrument panel.

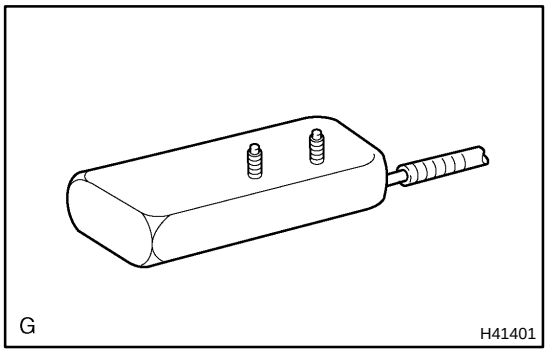

8. FRONT SEAT AIRBAG ASSY(VEHICLE INVOLVED IN COLLISION AND AIRBAG IS NOT DEPLOYED)

(a) Do a diagnostic system check (See page 05–690).

(b) Do a visual check which includes the following items with the front seat airbag assy removed from the vehicle.

- Check cuts, minute cracks or marked discoloration on the front seat airbag assy.
- Check cuts and cracks in wire harness, and for chipping in connectors.

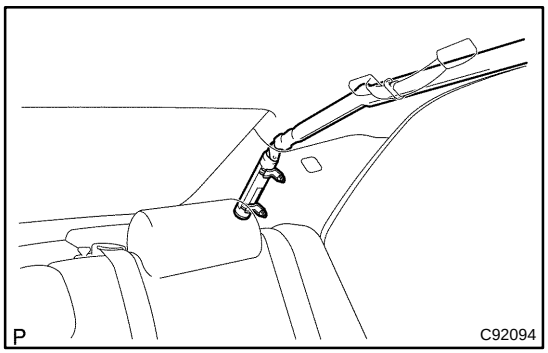

9. CURTAIN SHIELD AIRBAG ASSY (VEHICLE NOT INVOLVED IN COLLISION)

(a) Do a diagnostic system check (See page 05–690).

(b) Do a visual check which includes the following item with the curtain shield airbag assy installed in the vehicle.
Check cuts, minute cracks or marked discoloration on the curtain shield airbag assy.

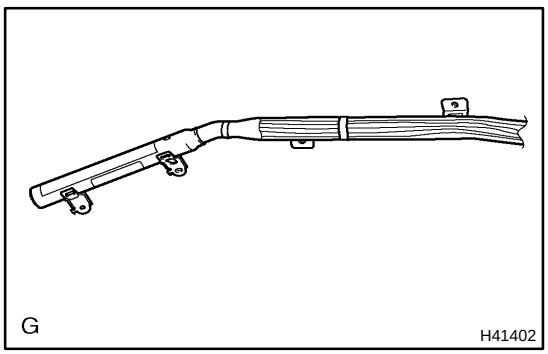

10. CURTAIN SHIELD AIRBAG ASSY (VEHICLE INVOLVED IN COLLISION AND AIRBAG IS NOT DEPLOYED)

(a) Do a diagnostic system check (See page 05–690).

(b) Do a visual check which includes the following items with the curtain shield airbag assy removed from the vehicle.

- Check cuts, minute cracks or marked discoloration on the curtain shield airbag assy.
- Check cuts and cracks in wire harness, and for chipping in connectors.

11. AIRBAG SENSOR ASSY CENTER(VEHICLE NOT INVOLVED IN COLLISION)

(a) Do a diagnostic system check (See page 05–690).

12. AIRBAG SENSOR ASSY CENTER(VEHICLE INVOLVED IN COLLISION AND AIRBAG IS NOT DEPLOYED)

(a) Do a diagnostic system check (See page 05–690).

13. AIRBAG SENSOR ASSY CENTER(VEHICLE INVOLVED IN COLLISION AND AIRBAG IS DEPLOYED)

(a) Replace the airbag sensor assy center (See page 60–56).

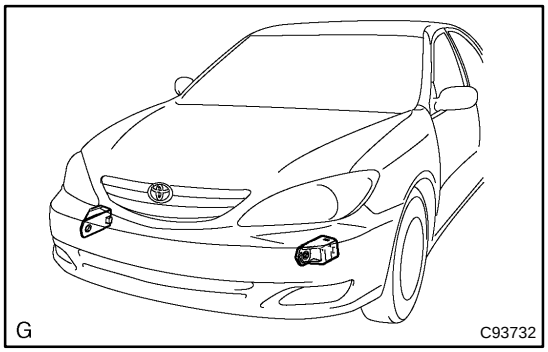

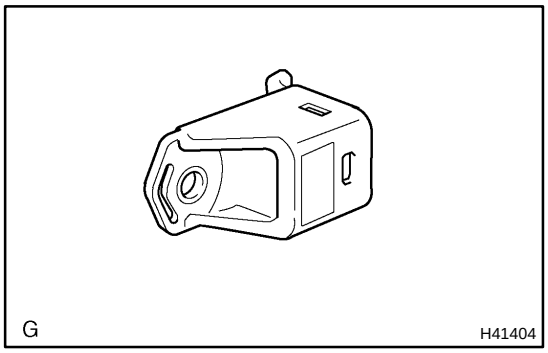

14. AIRBAG FRONT SENSOR(VEHICLE NOT INVOLVED IN COLLISION)

(a) Do a diagnostic system check (See page 05–690).

15. AIRBAG FRONT SENSOR(VEHICLE INVOLVED IN COLLISION)

(a) Do a diagnostic system check (See page 05–690).

(b) If the front fender of the car or its periphery is damaged, do a visual check for damage to the airbag front sensor, which includes the following items even if the airbag was not deployed:

- Cracks, dents or chips in the case
- Cracks, dents, chipping and scratches in the connector
- Peeling off of the label or damage to the serial number

16. SIDE AIRBAG SENSOR ASSY(VEHICLE NOT INVOLVED IN COLLISION)

(a) Do a diagnostic system check (See page 05–690).

17. SIDE AIRBAG SENSOR ASSY(VEHICLE INVOLVED IN COLLISION AND AIRBAG IS NOT DEPLOYED)

(a) Do a diagnostic system check (See page 05–690).

18. SIDE AIRBAG SENSOR ASSY(VEHICLE INVOLVED IN COLLISION AND AIRBAG IS DEPLOYED)

(a) Replace the front seat airbag assy and side airbag sensor assy (See page 60–62, 72–7).

19. AIRBAG SENSOR REAR(VEHICLE NOT INVOLVED IN COLLISION)

(a) Do a diagnostic system check (See page 05–690).

20. AIRBAG SENSOR REAR(VEHICLE INVOLVED IN COLLISION AND AIRBAG IS NOT DEPLOYED)

(a) Do a diagnostic system check (See page 05–690).

21. AIRBAG SENSOR REAR(VEHICLE INVOLVED IN COLLISION AND AIRBAG IS DEPLOYED)

(a) Replace the curtain shield airbag assy and airbag sensor rear (See page 60–41, 60–65).

22. SEAT POSITION SENSOR(VEHICLES NOT INVOLVED IN COLLISION)

(a) Do a diagnostic system check (See page 05–690).

23. SEAT POSITION SENSOR(VEHICLE INVOLVED IN COLLISION)

(a) Do a diagnostic system check (See page 05–690).

(b) Do a visual check for damage to the airbag front sensor, which includes the following items even if the airbag was not deployed:

- Cracks, dents or chips in the case
- Cracks, dents, chipping and scratches in the connector

24. WIRE HARNESS AND CONNECTOR(VEHICLE NOT INVOLVED IN COLLISION)

Do a diagnostic system check (See page 05–690).

25. WIRE HARNESS AND CONNECTOR(VEHICLE INVOLVED IN COLLISION)

(a) Do a diagnostic system check (See page 05–690).

(b) Check breaks in all wires of the SRS wire harness, and exposed conductors.

(c) Check to see if the SRS wire harness connectors are cracked or chipped.

HINT:

The SRS wire harness is integrated with the instrument panel wire harness assembly. All the connectors in the system are a standard yellow color.

HORN BUTTON ASSY

COMPONENTS

6007E–01

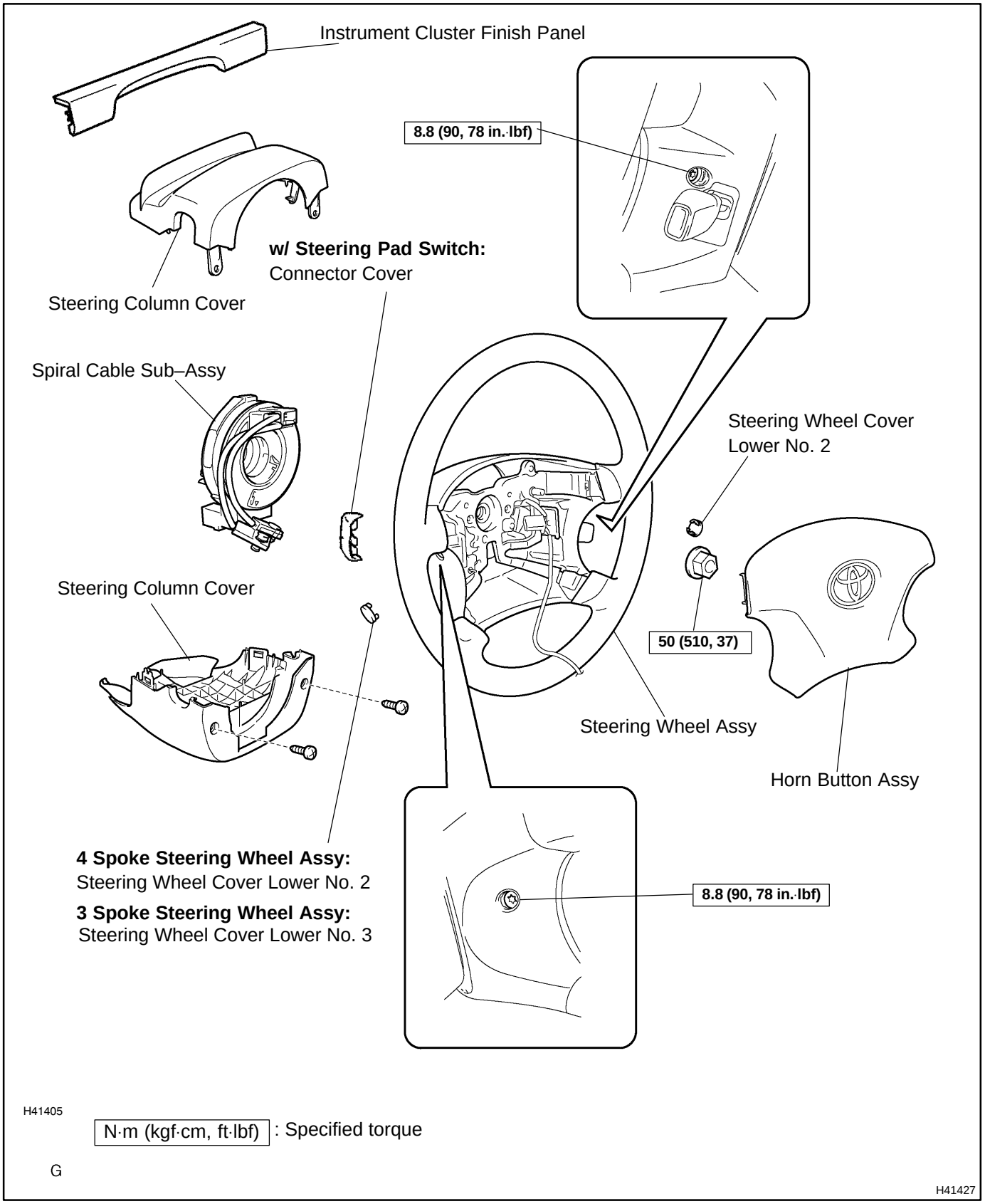

6007F–01

REPLACEMENT

HINT:

COMPONENTS: See page 60–14

1. **PRECAUTION(See page 60–1)**
2. **SEPARATE BATTERY NEGATIVE TERMINAL(See page 60–1)**

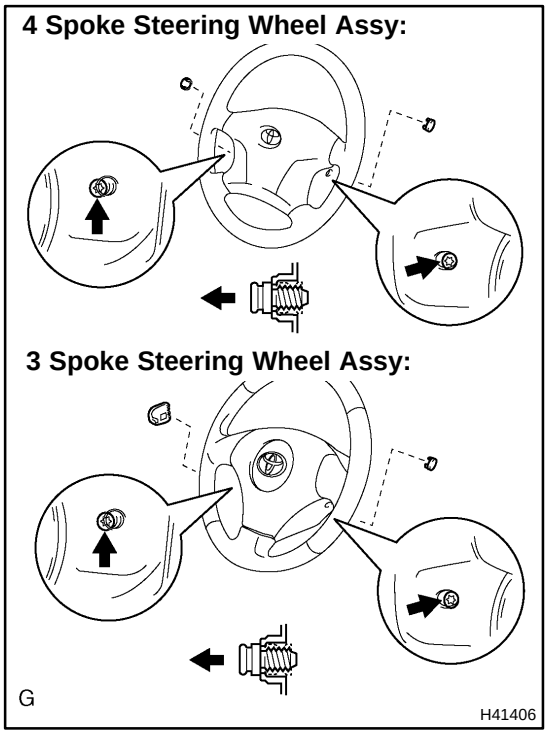

3. **REMOVE STEERING WHEEL COVER LOWER NO.2**
4. **REMOVE STEERING WHEEL COVER LOWER NO.2 (W/O STEERING PAD SWITCH 4 SPOKE STEERING WHEEL)**
5. **REMOVE STEERING WHEEL COVER LOWER NO.3(3 SPOKE STEERING WHEEL ASSY)**
6. **REMOVE CONNECTOR COVER (W/ STEERING PAD SWITCH 4 SPOKE STEERING WHEEL)**
7. **REMOVE HORN BUTTON ASSY**

(a) Place the front wheels facing straight ahead.

(b) Using a torx socket wrench (T30), loosen the 2 torx screws until the groove along the screw circumference catches on the screw case.

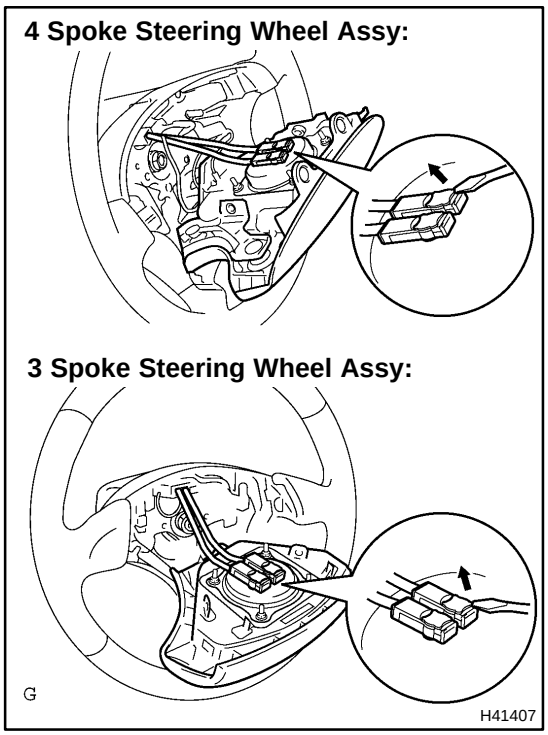

(c) Pull out the wheel pad from the horn button assy.

(d) 4 spoke steering wheel assy:
Disconnect the airbag connectors and horn connector and remove the horn button assy.

(e) 3 spoke steering wheel assy:
Disconnect the airbag connectors and remove the horn button assy.

8. INSPECT HORN BUTTON ASSY
(See page 60–9)

9. INSTALL HORN BUTTON ASSY

(a) Connect the airbag connectors and horn connector.
(b) Install the horn button after confirming that the circumference groove of the torx screws is caught on the screw case.
(c) Using a torx socket wrench (T 30), install the 2 screws.
Torque: 8.8 N·m (90 kgf·cm, 78 in.·lbf)

10. INSPECT SRS WARNING LIGHT(See page 05–690)

6007G–01

DISPOSAL

HINT:

When scrapping vehicle equipped with an SRS or disposing of a horn button assy, always first deploy the airbag in accordance with the procedure described below. If any abnormality occurs with the airbag deployment, contact the SERVICE DEPT. of TOYOTA MOTOR SALES, U.S.A., INC.

CAUTION:

- **Never dispose of a horn button assy which has an undeployed airbag.**
- **The airbag produces a sizeable exploding sound when it deploys, so perform the operation out–of–doors and where it will not create a nuisance to nearby residents.**

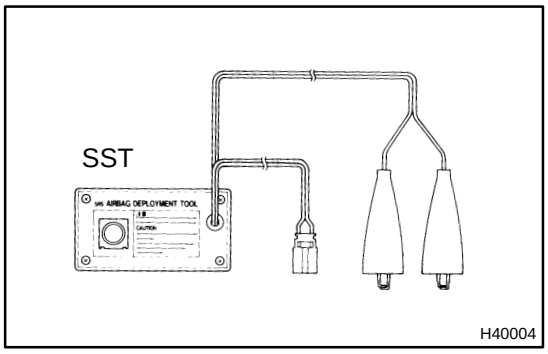

- **When deploying the airbag, always use the specified SST (SRS Airbag Deployment Tool). Perform the operation in a place away from electrical noise.**
- **When deploying an airbag, perform the operation at least 10 m (33 ft) away from the horn button assy.**
- **The horn button assy is very hot when the airbag is deployed, so leave it alone for at least 30 minutes after deployment.**
- **Use gloves and safety glasses when handling a horn button assy with the deployed airbag.**
- **Always wash your hands with water after completing the operation.**
- **Do not apply water, etc. to a horn button assy with the deployed airbag.**

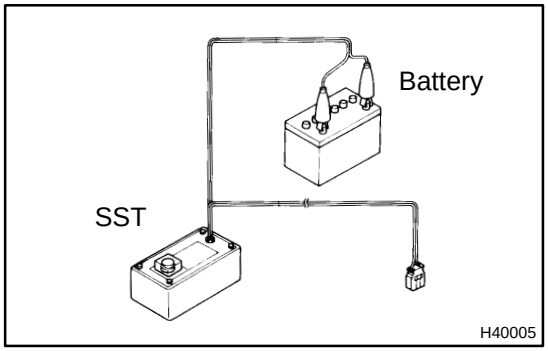

1. DISPOSE HORN BUTTON ASSY(WHEN SCRAPPING VEHICLE DEPLOYMENT METHOD)

HINT:

Have a battery ready as the power source to deploy the airbag.

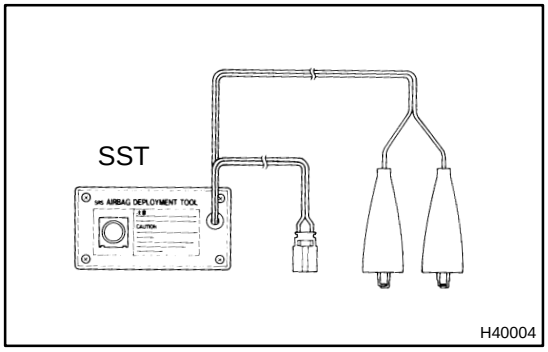

(a) Check functioning of the SST.

CAUTION:

When deploying the airbag, always use the specified SST: SRS Airbag Deployment Tool.

SST 09082–00700

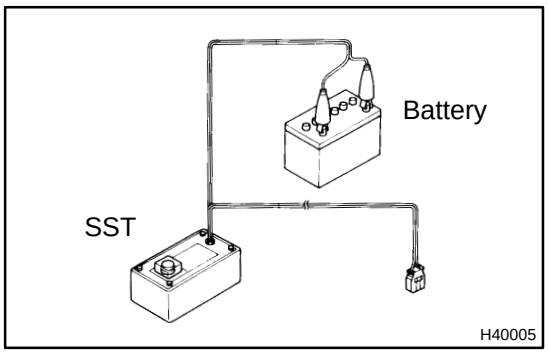

(1) Connect the SST to the battery.
Connect the red clip of the SST to the battery positive (+) terminal and the black clip to the battery negative (–) terminal.

HINT:
Do not connect the yellow connector which will be connected with the supplemental restraint system.

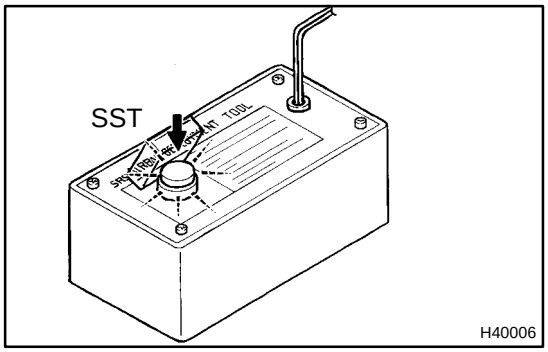

(2) Check functioning of the SST.
Press the SST activation switch, and check that the LED of the SST activation switch lights up.

CAUTION:
If the LED lights up when the activation switch is not being pressed, SST malfunction is probable, so definitely do not use the SST.

(3) Disconnect the SST from the battery.

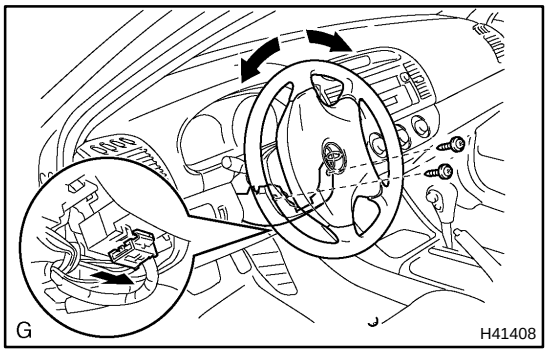

(b) Install the SST.

CAUTION:
Check that there is no looseness in the steering wheel and horn button assy.

(1) While turning the steering wheel right / left, remove the 2 screws and column lower cover.
(2) Disconnect the airbag connector of the spiral cable.

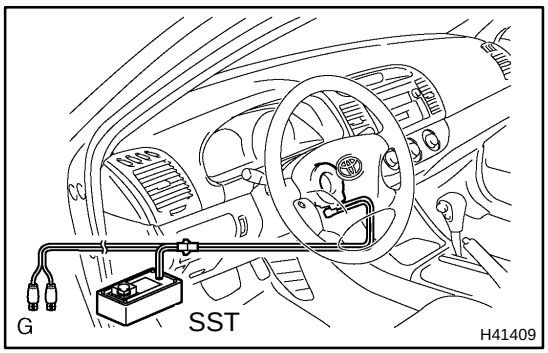

(3) Connect the connectors of the 2 SST to the airbag connector of the spiral cable back side.
SST 09082–00700, 09082–00780

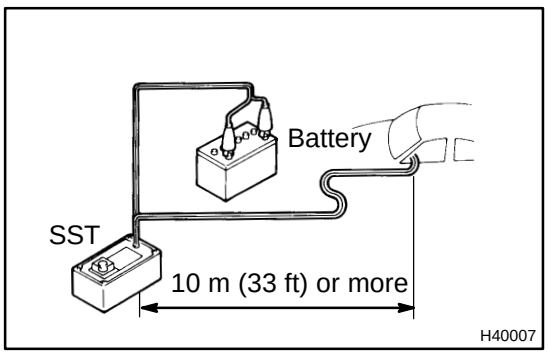

(4) Move the SST at least 10 m (33 ft) away from the front of the vehicle.
(5) Close all the doors and windows of the vehicle.

NOTICE:
Take care not to damage the SST wire harness.

(6) Connect the red clip of the SST to the battery positive (+) terminal and the black clip to the negative (–) terminal.

(c) Deploy the airbag.
(1) Confirm that no one is inside the vehicle or within 10 m (33 ft) area around the vehicle.
(2) Press the SST activation switch and deploy the airbag.

HINT:
The airbag deploys simultaneously as the LED of the SST activation switch lights up.

(d) Dispose the horn button assy (with airbag).

CAUTION:
- **The horn button assy is very hot when the airbag is deployed, so leave it alone for at least 30 minutes after deployment.**
- **Use gloves and safety glasses when handling a horn button assy with the deployed airbag.**
- **When moving a vehicle for scrapping which has a horn button assy with deployed airbag, use gloves and safety glasses.**
- **Do not apply water, etc. to a horn button assy with the deployed airbag.**
- **Always wash your hands with water after completing the operation.**

HINT:
When scrapping a vehicle, deploy the airbag and scrap the vehicle with the horn button assy still installed.

2. DISPOSE HORN BUTTON ASSY(WHEN DISPOSING OF AIRBAG ASSEMBLY DEPLOYMENT METHOD)

NOTICE:
- **When disposing of the horn button assy (with airbag) only, never use the customers vehicle to deploy the airbag.**
- **Be sure to follow the procedure given below when deploying the airbag.**

HINT:
Have a battery ready as the power source to deploy the airbag.

(a) Remove the horn button assy (See page 60–15).

CAUTION:
When storing the horn button assy, keep the upper surface of the pad facing upward.

(b) Using a service–purpose wire harness for the vehicle, tie down the horn button assy to the disc wheel.
Wire harness: Stripped wire harness section 1.25 mm^2 or more (0.0019 in^2. or more)

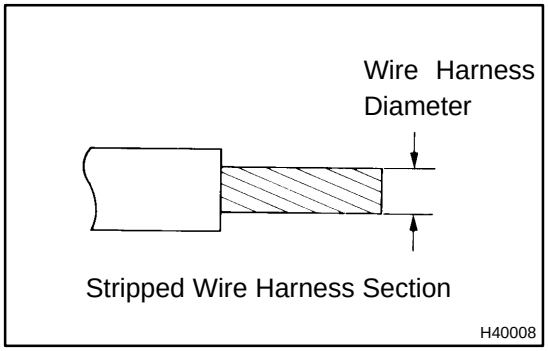

CAUTION:
If a wire harness which is too thin or some other thing is used to tie down the horn button assy, it may be snapped by the shock when the airbag is deployed. This is highly dangerous. Always use a wire harness for vehicle use which is at least 1.25 mm^2 (0.0019 in^2).

HINT:
To calculate the square of the stripped wire harness section:
Square = 3.14 x (Diameter)^2 divided by 4

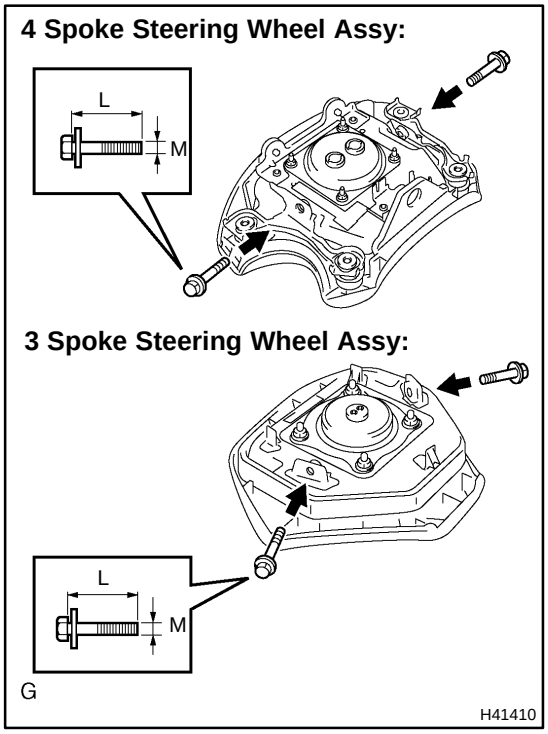

(1) Install the 2 bolts with washers in the 2 bolt holes in the horn button assy.

Bolt:
L: 35.0 mm (1.387 in.)
M: 6.0 mm (0.236 in.)
Pitch: 1.0 mm (0.039 in.)

NOTICE:

- **Tighten the bolts by hand until the bolts become difficult to turn.**
- **Do not tighten the bolts too much.**

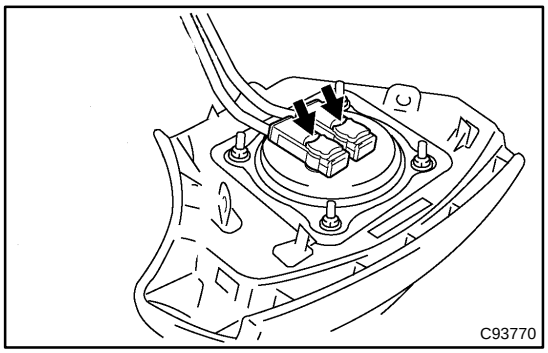

(2) Connect the connectors of the SST to the horn button assy connectors.

SST 09082–00801 (09082–10801, 09082–30801)

(3) Using 3 wire harness, wind the wire harness at least 2 times each around the bolts installed on the left and right sides of the horn button assy.

CAUTION:

- **Tightly wind the wire harness around the bolts so that there is no slack.**
- **If there is slack in the wire harness, the horn button assy may come loose due to the shock when the airbag is deployed. This is highly dangerous.**

4 Spoke Steering Wheel Assy:

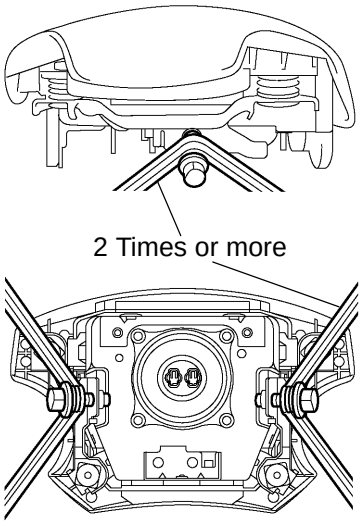

3 Spoke Steering Wheel Assy:

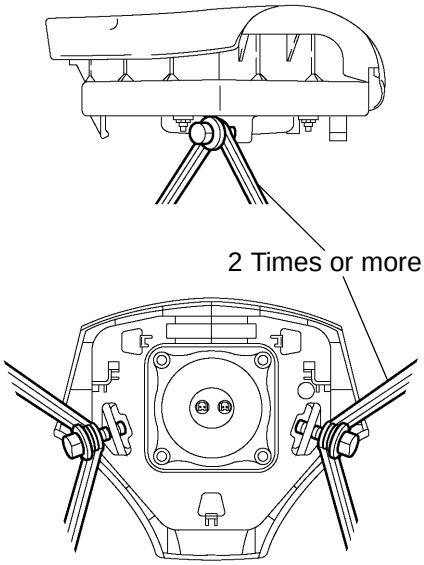

H41425

4 Spoke Steering Wheel Assy:

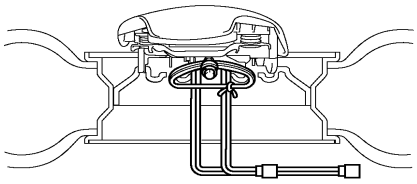

3 Spoke Steering Wheel Assy:

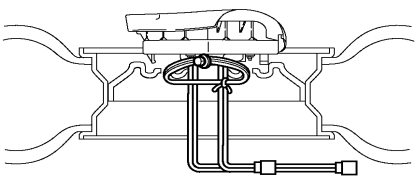

H41694

(4) Face the upper surface of the horn button assy upward. Separately tie the left and right sides of the horn button assy to the disc wheel through the hub nut holes. Position the horn button assy connector so that it hangs downward through a hub hole in the disc wheel.

CAUTION:

- **Make sure that the wire harness is tight. It is very dangerous when looseness in the wire harness results in the horn button assy coming free through the shock from the airbag deploying.**
- **Always tie down the horn button assy with the pad side facing upward. It is very dangerous if the horn button assy is tied down with the metal surface facing upward as the wire harness will be cut by the shock from the airbag deploying and the horn button assy will be thrown into the air.**

NOTICE:
The disc wheel will be marked by the airbag deployment, so when disposing of the airbag use a redundant disc wheel.

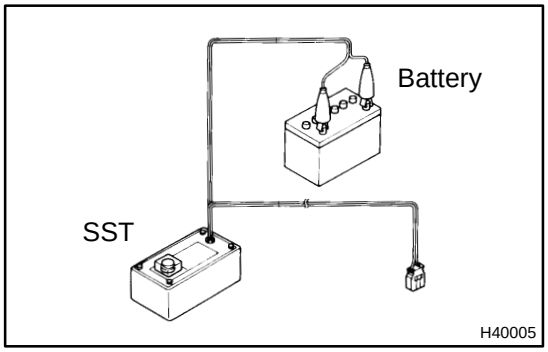

(c) Check functioning of the SST (See step 1–(a)).

4 Spoke Steering Wheel Assy:

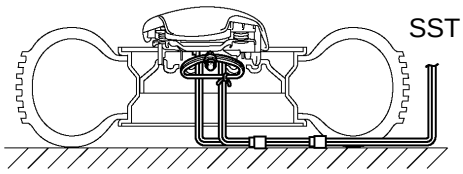

3 Spoke Steering Wheel Assy:

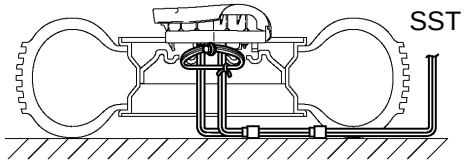

(d) Install the SST.

CAUTION:
Place the disc wheel on the level ground.

(1) Connect the connector of the SST.
SST 09082–00700

NOTICE:
To avoid damaging the SST connector and wire harness, do not lock the secondary lock of the twin lock. Also, secure some slack for the SST wire harness inside the disc wheel.

(2) Move the SST to at least 10 m (33 ft) away from the horn button assy tied down on the disc wheel.

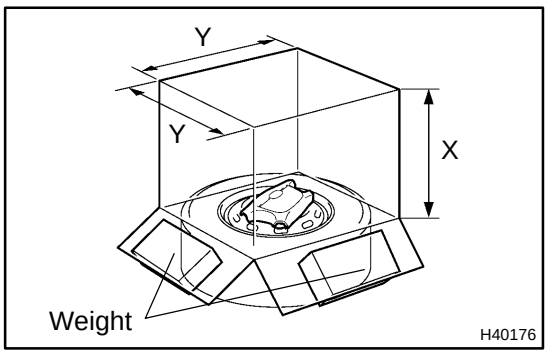

(e) Cover the horn button assy with a cardboard box or tires.

- Covering method using a cardboard box:
  Cover the horn button assy with the cardboard box and weight the cardboard box down in 4 places with at least 190 N (20 kg, 44 lb).

Size of cardboard box:
Must exceed the following dimensions:
X = 460 mm (18.11 in.)
Y = 650 mm (25.59 in.)

NOTICE:

- **When dimension Y of the cardboard box exceeds the diameter of the disc wheel with tire to which the horn button assy is tied, X should be the following size.**
  X = 460 mm (18.11 in.) + width of tire

- **If a cardboard box smaller than the specified size is used, the cardboard box will be broken by the shock from the airbag deployment.**

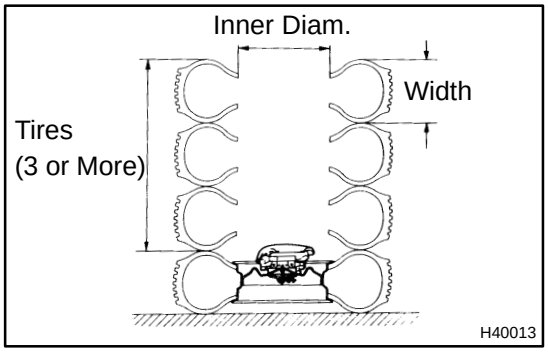

- Covering method using tires:
  Place at least 3 tires without disc wheel on top of the disc wheel with tire to which the horn button assy is tied.

Tire size: Must exceed the following dimensions–
Width: 185 mm (7.28 in.)
Inner diameter: 360 mm (14.17 in.)

CAUTION:
Do not use tires with disc wheels.

NOTICE:
The tires may be marked by the airbag deployment, so use the redundant tires.

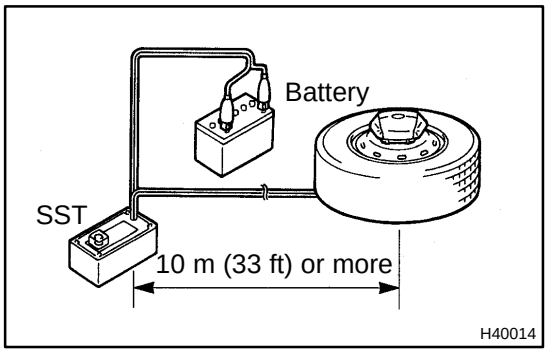

(f) Deploy the airbag.
  (1) Connect the SST red clip to the battery positive (+) terminal and the black clip to the battery negative (–) terminal.
  (2) Check that no one is within 10 m (33 ft) area around the disc wheel which the horn button assy is tied to.
  (3) Press the SST activation switch and deploy the airbag.

HINT:
The airbag deploys simultaneously as the LED of the SST activation switch lights up.

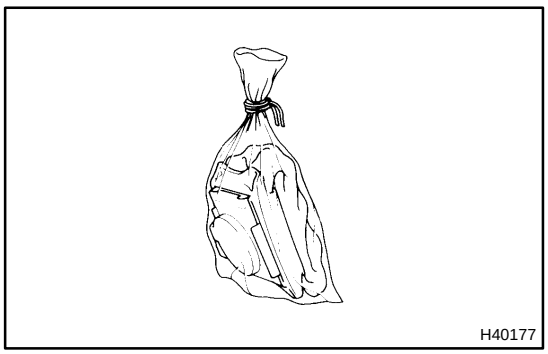

(g) Dispose of the horn button assy (with airbag).

CAUTION:
- **The horn button assy is very hot when the airbag is deployed, so leave it alone for at least 30 minutes after deployment.**
- **Use gloves and safety glasses when handling a horn button assy with the deployed airbag.**
- **Always wash your hands with water after completing the operation.**
- **Do not apply water, etc. to a horn button assy with the deployed airbag.**
  (1) Remove the horn button assy from the disc wheel.
  (2) Place the horn button assy in a vinyl bag, tie the end tightly and dispose of it in the same way as other general parts disposal.

SPIRAL CABLE SUB–ASSY

6007H–01

COMPONENTS

(See page 60–14)

REPLACEMENT

HINT:

COMPONENTS: See page 60–14

1. **PRECAUTION(See page 60–1)**
2. **SEPARATE BATTERY NEGATIVE TERMINAL(See page 60–1)**
3. **PLACE FRONT WHEELS FACING STRAIGHT AHEAD**
4. **REMOVE STEERING WHEEL COVER LOWER NO.2**

5. **REMOVE STEERING WHEEL COVER LOWER NO.2 (W/O STEERING PAD SWITCH 4 SPOKE STEERING WHEEL)**
6. **REMOVE STEERING WHEEL COVER LOWER NO.3(3 SPOKE STEERING WHEEL ASSY)**

7. **REMOVE CONNECTOR COVER (W/ STEERING PAD SWITCH 4 SPOKE STEERING WHEEL)**
8. **REMOVE HORN BUTTON ASSY**
   (See page 60–15)
9. **REMOVE STEERING WHEEL ASSY**
   (See page 50–9)
   SST 09950–50013 (09951–05010, 09952–05010, 09953–05020, 09954–05021)
10. **REMOVE INSTRUMENT CLUSTER FINISH PANEL**
    (See page 71–12)
11. **REMOVE STEERING COLUMN COVER**

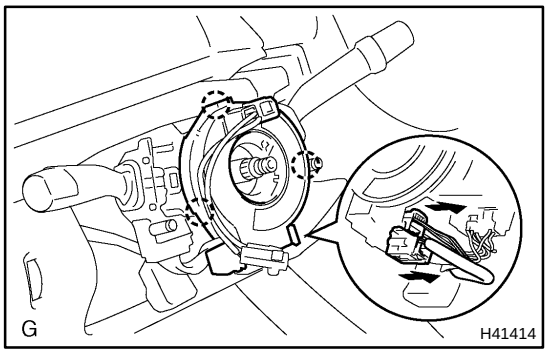

12. **REMOVE SPIRAL CABLE SUB–ASSY**

(a) Disconnect the airbag connector and connector from the spiral cable sub–assy.
(b) Release the 3 claws and remove the spiral cable sub–assy.

13. **INSPECT SPIRAL CABLE SUB–ASSY**

(a) If the following condition is identified, replace the spiral cable sub–assy with new one.
Condition:
Scratches or cracks on the connector
Cracks, dents or chipping of the spiral cable sub–assy

14. **PLACE FRONT WHEELS FACING STRAIGHT AHEAD**

(a) Check that the front wheels are facing straight ahead.

15. INSTALL SPIRAL CABLE SUB–ASSY

(a) Set the turn signal switch in neutral position.

NOTICE:

Make sure of the neutral position since the pin of the turn signal switch may be snapped.

(b) Engage the 3 claws and install the spiral cable sub–assy.

NOTICE:

When replacing the spiral cable sub–assy with new one, remove the lock pin before installing the handle.

(c) Connect the airbag connector and connector.

(d) Install the steering column cover with the 2 screws.

16. CENTER SPIRAL CABLE

(a) Check that the ignition switch is OFF.

(b) Check that the battery negative terminal is disconnected.

NOTICE:

Do not start the operation for 90 seconds after removing the terminal.

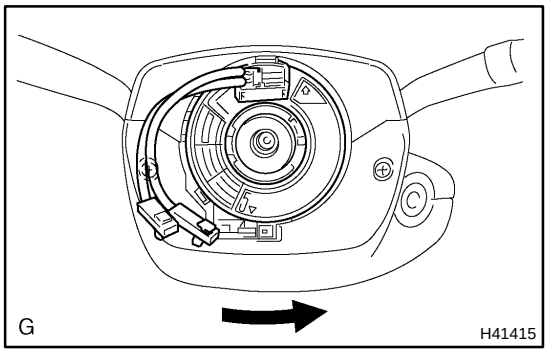

(c) Turn the cable counterclockwise by hand until it becomes harder to turn.

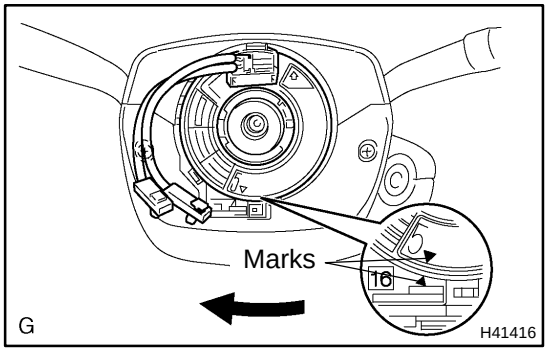

(d) Then rotate the cable clockwise about 2.5 turns to align the marks.

HINT:

The cable will rotate about 2.5 turns to both left and right of the center.

17. INSTALL STEERING WHEEL ASSY
(See page 50–9)
Torque: 50 N·m (510 kgf·cm, 37 ft·lbf)

18. INSTALL HORN BUTTON ASSY
(See page 60–15)
Torque: 8.8 N·m (90 kgf·cm, 78 in.·lbf)

19. INSPECT HORN BUTTON ASSY
(See page 60–9)

20. INSPECT SRS WARNING LIGHT(See page 05–690)

INSTR PNL PASS L/DOOR AIR BAG ASSY

COMPONENTS

6007J–01

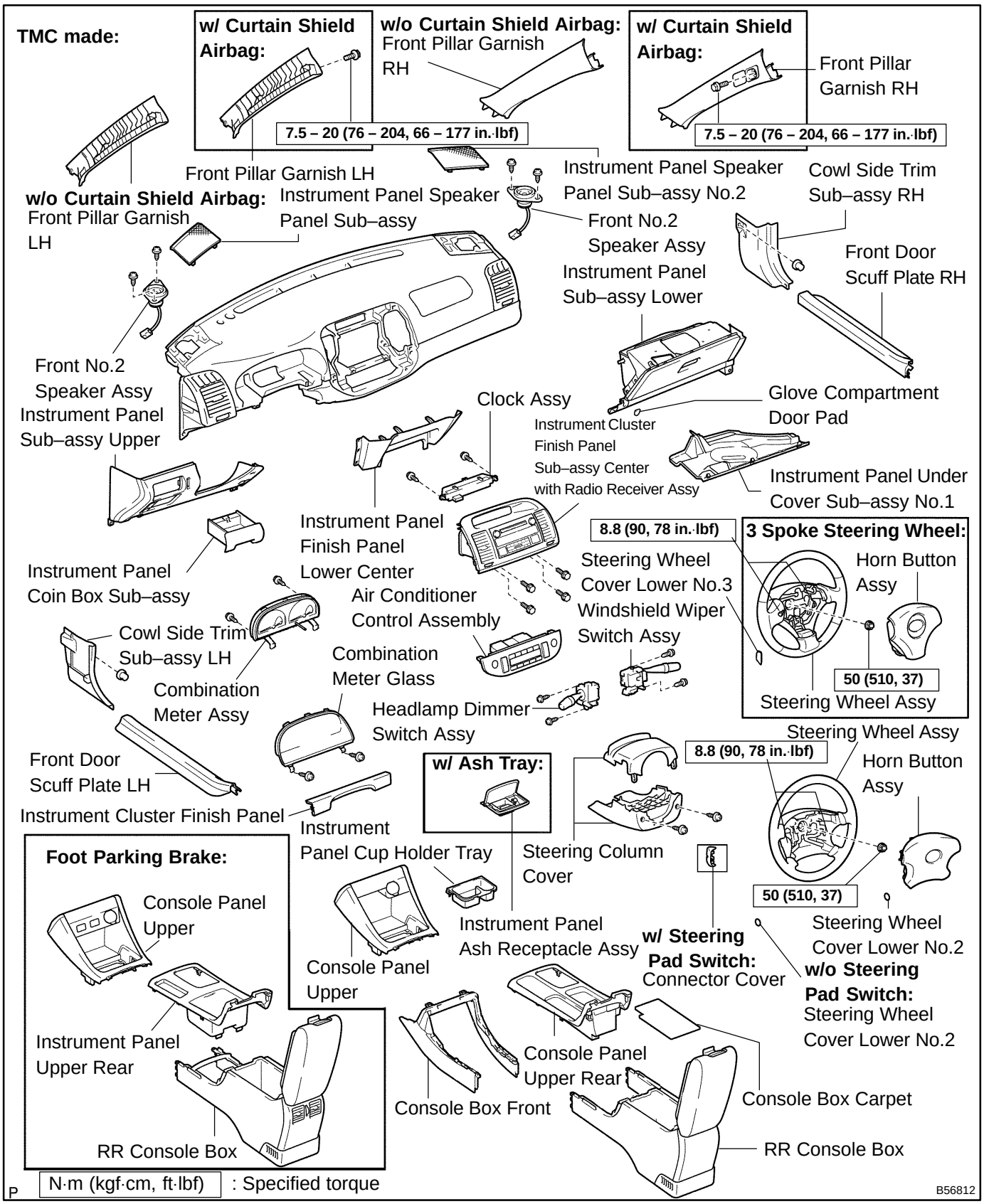

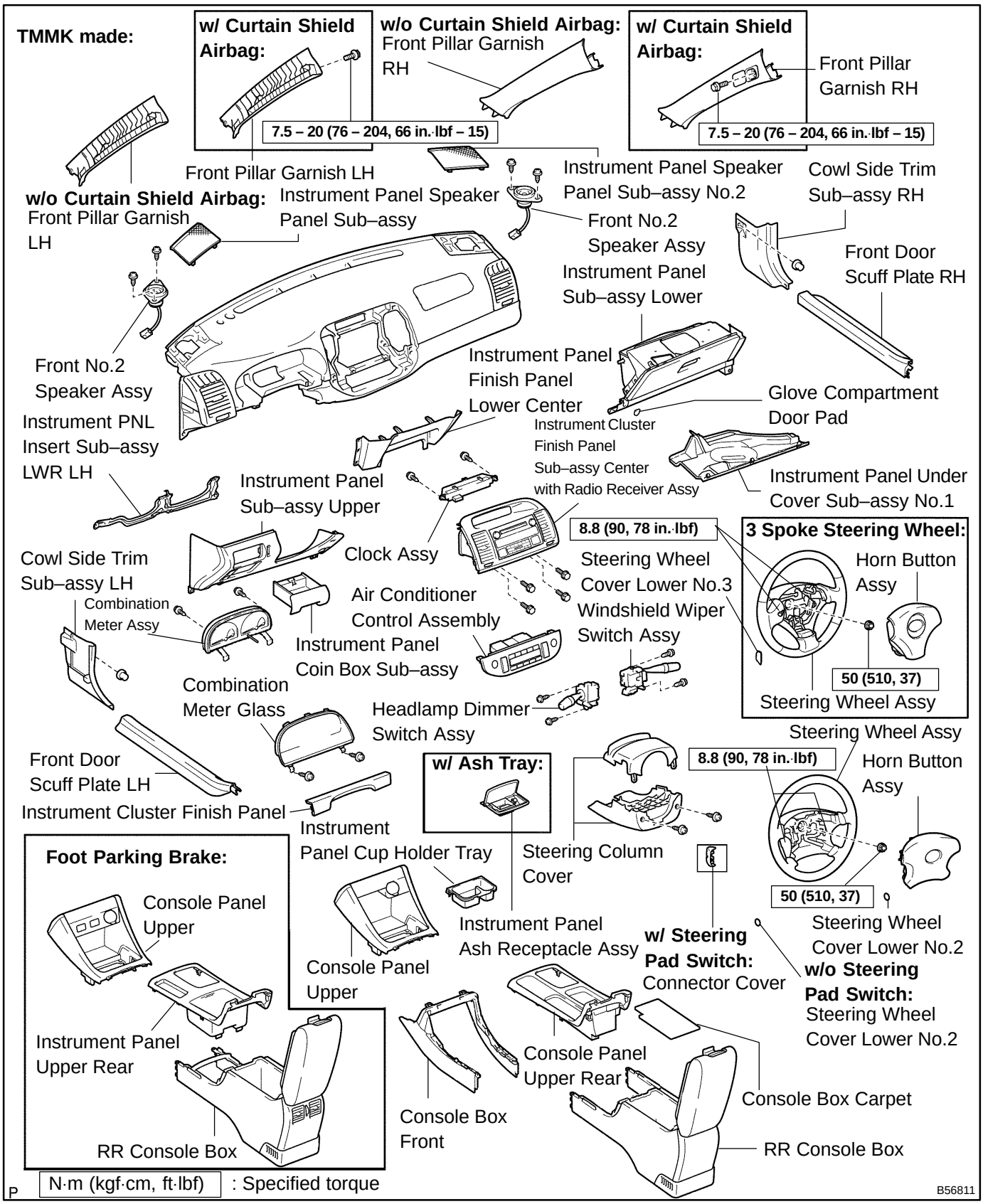
TMMK made:
w/ Curtain Shield Airbag:
7.5 – 20 (76 – 204, 66 in.·lbf – 15)
w/o Curtain Shield Airbag:
Front Pillar Garnish RH
w/ Curtain Shield Airbag:
Front Pillar Garnish RH
7.5 – 20 (76 – 204, 66 in.·lbf – 15)
Front Pillar Garnish LH
w/o Curtain Shield Airbag:
Front Pillar Garnish LH
Instrument Panel Speaker Panel Sub–assy
Instrument Panel Speaker Panel Sub–assy No.2
Front No.2 Speaker Assy
Cowl Side Trim Sub–assy RH
Front Door Scuff Plate RH
Instrument Panel Sub–assy Lower
Front No.2 Speaker Assy
Instrument Panel Finish Panel Lower Center
Glove Compartment Door Pad
Instrument PNL Insert Sub–assy LWR LH
Instrument Cluster Finish Panel Sub–assy Center with Radio Receiver Assy
Instrument Panel Under Cover Sub–assy No.1
Instrument Panel Sub–assy Upper
8.8 (90, 78 in.·lbf)
3 Spoke Steering Wheel:
Clock Assy
Steering Wheel Cover Lower No.3
Horn Button Assy
Cowl Side Trim Sub–assy LH
Combination Meter Assy
Air Conditioner Control Assembly
Windshield Wiper Switch Assy
Instrument Panel Coin Box Sub–assy
50 (510, 37)
Steering Wheel Assy
Combination Meter Glass
Headlamp Dimmer Switch Assy
Steering Wheel Assy
Front Door Scuff Plate LH
w/ Ash Tray:
8.8 (90, 78 in.·lbf)
Horn Button Assy
Instrument Cluster Finish Panel
Instrument Panel Cup Holder Tray
Steering Column Cover
Foot Parking Brake:
Console Panel Upper
50 (510, 37)
Steering Wheel Cover Lower No.2
Instrument Panel Ash Receptacle Assy
w/ Steering Pad Switch:
Connector Cover
w/o Steering Pad Switch:
Steering Wheel Cover Lower No.2
Console Panel Upper
Instrument Panel Upper Rear
Console Panel Upper Rear
Console Box Carpet
Console Box Front
RR Console Box
RR Console Box
N·m (kgf·cm, ft·lbf) : Specified torque
P
B56811

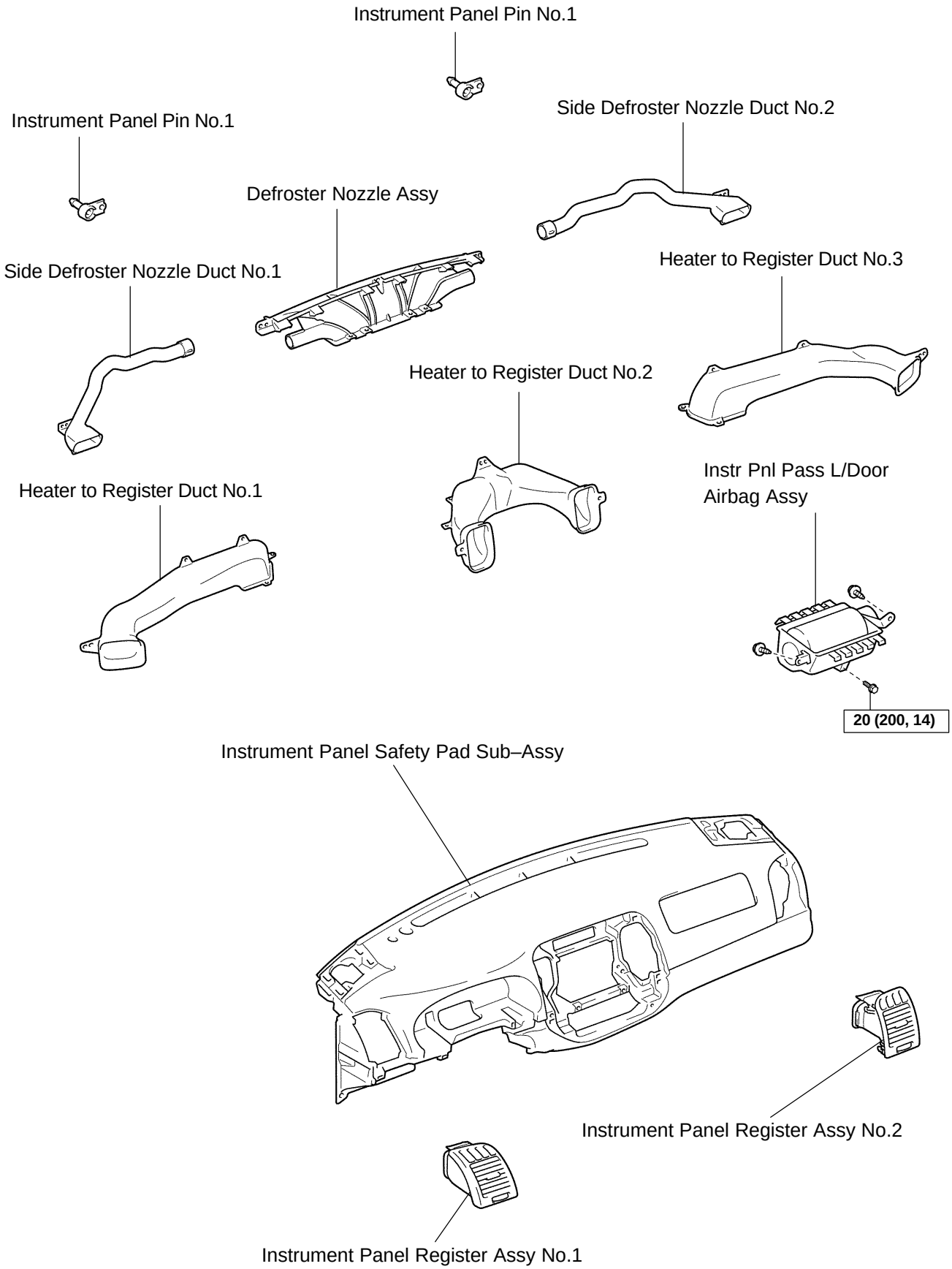
Instrument Panel Pin No.1
Instrument Panel Pin No.1
Side Defroster Nozzle Duct No.2
Defroster Nozzle Assy
Side Defroster Nozzle Duct No.1
Heater to Register Duct No.3
Heater to Register Duct No.2
Heater to Register Duct No.1
Instr Pnl Pass L/Door Airbag Assy
20 (200, 14)
Instrument Panel Safety Pad Sub–Assy
Instrument Panel Register Assy No.2
Instrument Panel Register Assy No.1
N·m (kgf·cm, ft·lbf) : Specified torque
H42155

6007K–01

REPLACEMENT

HINT:

COMPONENTS: See page 60–27

1. **PRECAUTION(See page 60–1)**
2. **SEPARATE BATTERY NEGATIVE TERMINAL(See page 60–1)**
3. **PLACE FRONT WHEELS FACING STRAIGHT AHEAD**
4. **REMOVE STEERING WHEEL COVER LOWER NO.2**

5. **REMOVE STEERING WHEEL COVER LOWER NO.2 (W/O STEERING PAD SWITCH 4 SPOKE STEERING WHEEL)**
6. **REMOVE STEERING WHEEL COVER LOWER NO.3(3 SPOKE STEERING WHEEL ASSY)**

7. **REMOVE CONNECTOR COVER(W/ STEERING PAD SWITCH 4 SPOKE STEERING WHEEL)**

8. **REMOVE HORN BUTTON ASSY**
   (See page 60–15)
9. **REMOVE STEERING WHEEL ASSY**
   (See page 50–9)
10. **REMOVE STEERING COLUMN COVER**

11. **REMOVE HEADLAMP DIMMER SWITCH ASSY**
    (See page 50–9)
12. **REMOVE WINDSHIELD WIPER SWITCH ASSY**
    (See page 50–9)
13. **REMOVE COMBINATION METER ASSY**
    (See page 71–12)
14. **REMOVE FRONT DOOR SCUFF PLATE LH**
    (See page 71–12)
15. **REMOVE FRONT DOOR SCUFF PLATE RH**
    (See page 71–12)
16. **REMOVE COWL SIDE TRIM SUB–ASSY LH**
    (See page 71–12)
17. **REMOVE COWL SIDE TRIM SUB–ASSY RH**
    (See page 71–12)
18. **REMOVE INSTRUMENT PANEL COIN BOX SUB–ASSY**
    (See page 71–12)
19. **REMOVE INSTRUMENT PANEL SUB–ASSY UPPER**
    (See page 71–12)
20. **REMOVE INSTRUMENT PNL INSERT SUB–ASSY LWR LH(TMMK MADE)**
    (See page 71–12)
21. **REMOVE AIR CONDITIONER CONTROL ASSEMBLY(See page 71–12)**
22. **REMOVE INSTRUMENT CLUSTER FINISH PANEL SUB–ASSY CENTER**
    (See page 71–12)
23. **REMOVE INSTRUMENT PANEL UNDER COVER SUB–ASSY NO.1**
    (See page 71–12)

24. REMOVE GLOVE COMPARTMENT DOOR PAD
(See page 71–12)
25. REMOVE INSTRUMENT PANEL SUB–ASSY LOWER
(See page 71–12)
26. SEPARATE PASSENGER AIRBAG CONNECTOR(See page 60–34)
(a) Disconnect the instr pnl pass l/door airbag assy connectors.
27. REMOVE FLOOR SHIFT SHIFT LEVER KNOB SUB–ASSY(M/T TRANSAXLE)

28. REMOVE CONSOLE PANEL UPPER REAR
(See page 71–12)
29. REMOVE CONSOLE BOX CARPET
(See page 71–12)
30. REMOVE RR CONSOLE BOX(See page 71–12)
31. REMOVE INSTRUMENT PANEL CUP HOLDER TRAY(W/O ASHTRAY)
(See page 71–12)
32. REMOVE INSTRUMENT PANEL ASH RECEPTACLE ASSY(W/ ASHTRAY)
(See page 71–12)
33. REMOVE CONSOLE PANEL UPPER
(See page 71–12)
34. REMOVE CONSOLE BOX FRONT
(See page 71–12)
35. REMOVE INSTRUMENT PANEL FINISH PANEL LOWER CENTER
(See page 71–12)
36. REMOVE FRONT PILLAR GARNISH LH(W/O CURTAIN SHIELD AIR BAG)
(See page 71–12)
37. REMOVE FRONT PILLAR GARNISH LH(W/ CURTAIN SHIELD AIR BAG)
(See page 71–12)
38. REMOVE FRONT PILLAR GARNISH RH(W/O CURTAIN SHIELD AIR BAG)
(See page 71–12)
39. REMOVE FRONT PILLAR GARNISH RH(W/ CURTAIN SHIELD AIR BAG)
(See page 71–12)
40. REMOVE INSTRUMENT PANEL SPEAKER PANEL SUB–ASSY NO.2
(See page 71–12)
41. REMOVE INSTRUMENT PANEL SPEAKER PANEL SUB–ASSY
(See page 71–12)
42. REMOVE FRONT NO.2 SPEAKER ASSY(See page 71–12)
43. REMOVE INSTRUMENT PANEL SAFETY PAD SUB–ASSY
(See page 71–12)
44. REMOVE INSTRUMENT PANEL REGISTER ASSY NO.2
(See page 71–12)
45. REMOVE INSTRUMENT PANEL REGISTER ASSY NO.1
(See page 71–12)
46. REMOVE SIDE DEFROSTER NOZZLE DUCT NO.2
(See page 71–12)

47. REMOVE SIDE DEFROSTER NOZZLE DUCT NO.1
(See page 71–12)
48. REMOVE DEFROSTER NOZZLE ASSY
(See page 71–12)
49. REMOVE HEATER TO REGISTER DUCT NO.1
(See page 71–12)
50. REMOVE HEATER TO REGISTER DUCT NO.3
(See page 71–12)
51. REMOVE HEATER TO REGISTER DUCT NO.2
(See page 71–12)

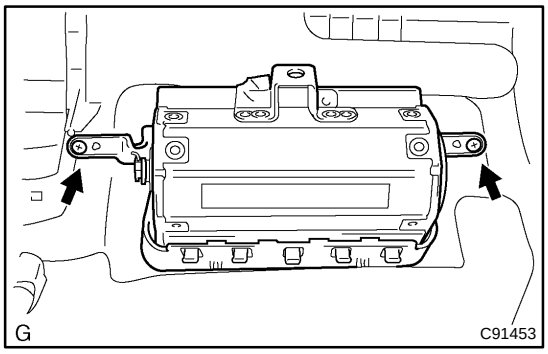

52. REMOVE INSTR PNL PASS L/DOOR AIR BAG ASSY

(a) Remove the 2 screws.

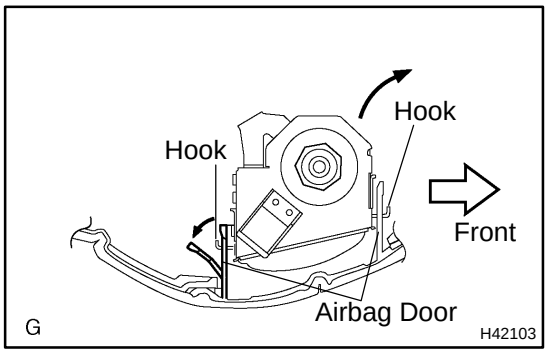

(b) Release the rear side wall of the airbag door from the hook by slightly deflecting it and roll the instr pnl pass l/door airbag assy forward.
(c) Release the front side wall of the airbag door from the other hook and remove the instr pnl pass l/door airbag assy.

53. INSPECT INSTR PNL PASS L/DOOR AIR BAG ASSY
(See page 60–9)
54. INSTALL INSTR PNL PASS L/DOOR AIR BAG ASSY

55. INSTALL FRONT PILLAR GARNISH LH(W/ CURTAIN SHIELD AIR BAG)
(See page 71–12)
56. INSTALL FRONT PILLAR GARNISH RH(W/ CURTAIN SHIELD AIR BAG)
(See page 71–12)
57. PLACE FRONT WHEELS FACING STRAIGHT AHEAD
58. INSTALL SPIRAL CABLE SUB–ASSY
(See page 60–25)
59. CENTER SPIRAL CABLE(See page 60–25)
60. INSTALL STEERING WHEEL ASSY
(See page 50–9)

61. INSTALL HORN BUTTON ASSY
(See page 60–15)

62. INSPECT HORN BUTTON ASSY
(See page 60–9)

63. INSPECT SRS WARNING LIGHT(See page 05–690)

6007L–01

DISPOSAL

HINT:

When scrapping vehicle equipped with an SRS or disposing of a instr pnl pass l/door airbag assy, always first deploy the airbag in accordance with the procedure described below. If any abnormality occurs with the airbag deployment, contact the SERVICE DEPT. of TOYOTA MOTOR SALES, U.S.A., INC.

CAUTION:

- **Never dispose of a instr pnl pass l/door airbag assy which has an undeployed airbag.**
- **The airbag produces a sizeable exploding sound when it deploys, so perform the operation out–of–doors and where it will not create a nuisance to nearby residents.**

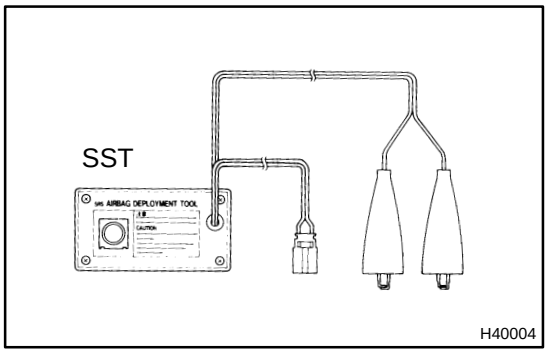

- **When deploying the airbag, always use the specified SST (SRS Airbag Deployment Tool). Perform the operation in a place away from electrical noise.**
- **When deploying an airbag, perform the operation at least 10 m (33 ft) away from the instr pnl pass l/door airbag assy.**
- **The instr pnl pass l/door airbag assy is very hot when the airbag is deployed, so leave it alone for at least 30 minutes after deployment.**
- **Use gloves and safety glasses when handling a instr pnl pass l/door airbag assy with the deployed airbag.**
- **Always wash your hands with water after completing the operation.**
- **Do not apply water, etc. to a instr pnl pass l/door airbag assy with the deployed airbag.**

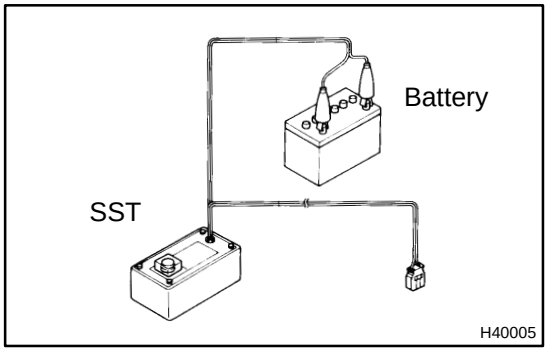

1. DISPOSE INSTR PNL PASS L/DOOR AIR BAG ASSY(WHEN SCRAPPING VEHICLE DEPLOYMENT METHOD)

HINT:

Have a battery ready as the power source to deploy the airbag.

(a) Check functioning of the SST (See step 1–(a) on page 60–17).

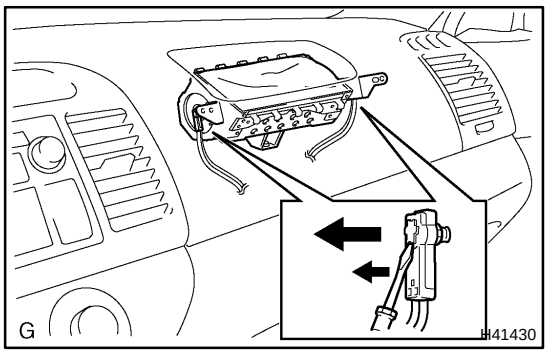

(b) Disconnect the airbag connector.
(1) Remove the front scuff plate.
(2) Remove the cowl side trim sub–assy.
(3) Remove the instrument panel under cover sub–assy No.1.
(4) Remove the glove compartment door pad.
(5) Remove the instrument panel sub–assy lower.

NOTICE:

When handling the airbag connector, take care not to damage the airbag wire harness.

(6) Using a screwdriver, disconnect the airbag connectors.

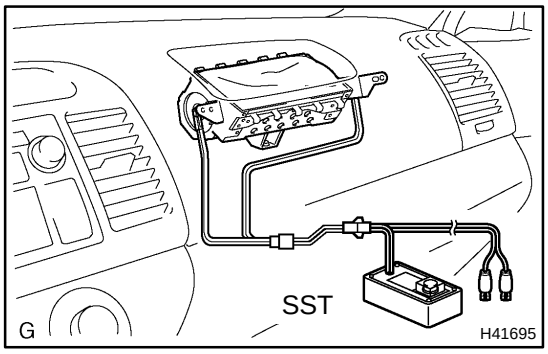

(c) Install the SST.
(1) Connect the connectors of the 3 SST to the instr pnl pass l/door airbag assy connectors.

SST 09082–00700, 09082–00801 (09082–10801, 09082–30801)

NOTICE:

To avoid damaging the SST connector and wire harness, do not lock the secondary lock of the twin lock.

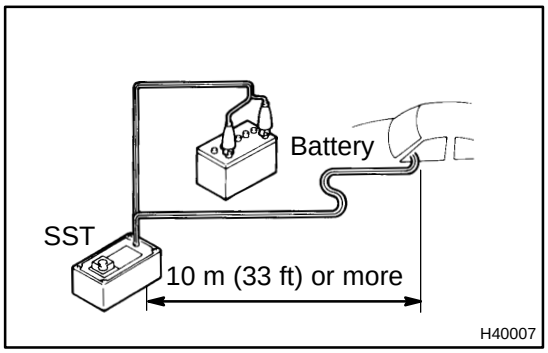

(2) Move the SST to at least 10 m (33 ft) away from the front of the vehicle.
(3) Close all the doors and windows of the vehicle.

NOTICE:

Take care not to damage the SST wire harness.

(4) Connect the red clip of the SST to the battery positive (+) terminal and the black clip to the negative (–) terminal.

(d) Deploy the airbag.
(1) Confirm that no one is inside the vehicle or within 10 m (33 ft) area around the vehicle.
(2) Press the SST activation switch and deploy the airbag.

HINT:

The airbag deploys simultaneously as the LED of the SST activation switch lights up.

(e) Dispose of the instr pnl pass l/door airbag assy.

CAUTION:

- **The instr pnl pass l/door airbag assy is very hot when the airbag is deployed, so leave it alone for at least 30 minutes after deployment.**
- **Use gloves and safety glasses when handling a instr pnl pass l/door airbag assy with the deployed airbag.**
- **When moving a vehicle for scrapping which has a instr pnl pass l/door airbag assy with the deployed airbag, use gloves and safety glasses.**
- **Do not apply water, etc. to a instr pnl pass l/door airbag assy with the deployed airbag.**
- **Always wash your hands with water after completing the operation.**

HINT:

When scrapping a vehicle, deploy the airbag and scrap the vehicle with the instr pnl pass l/door airbag assy still installed.

2. DISPOSE INSTR PNL PASS L/DOOR AIR BAG ASSY(WHEN DISPOSING OF AIRBAG ASSEMBLY DEPLOYMENT METHOD)

NOTICE:

- **When disposing of the instr pnl pass l/door airbag assy only, never use the customer's vehicle to deploy the airbag.**
- **Be sure to follow the procedure given below when deploying the airbag.**

HINT:

Have a battery ready as the power source to deploy the airbag.

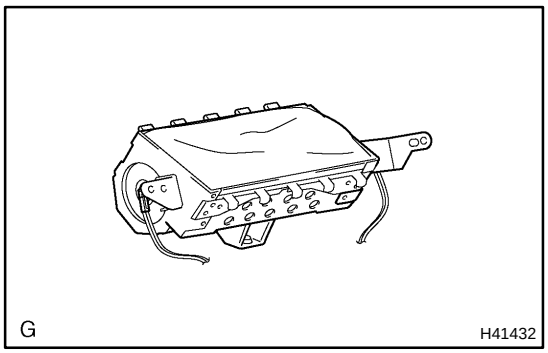

(a) Remove the instr pnl pass l/door airbag assy (See page 60–30).

CAUTION:

- **When removing the instr pnl pass l/door airbag assy, work must be started 90 seconds after the ignition switch is turned to the "LOCK" position and the negative (–) terminal cable is disconnected from the battery.**
- **Store the instr pnl pass l/door airbag assy with the airbag deployment side facing upward.**

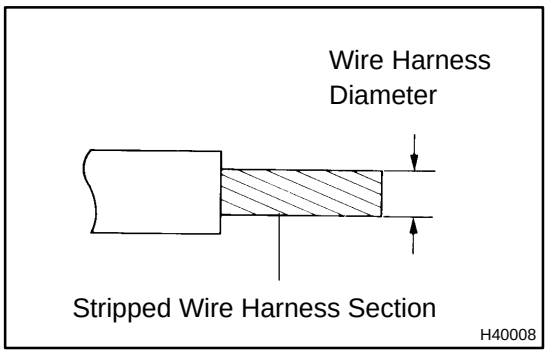

(b) Using a service–purpose wire harness for the vehicle, tie down the instr pnl pass l/door airbag assy to the tire.

Wire harness: Stripped wire harness section 1.25 mm^2 or more (0.0019 $in.^2$ or more)

CAUTION:

If a wire harness which is too thin or some other thing is used to tie down the instr pnl pass l/door airbag assy, it may be snapped by the shock when the airbag is deployed. This is highly dangerous. Always use a wire harness which is at least 1.25 mm^2 (0.0019 $in.^2$).

HINT:

To calculate the square of the stripped wire harness section:

Square = 3.14 X (Diameter)^2 divided by 4

Position the instr pnl pass l/door airbag assy inside the tire with the airbag deployment side facing inside.

Tire size: Must exceed the following dimensions–
Width: 185 mm (7.28 in.)
Inner diameter: 360 mm (14.17 in.)

CAUTION:

- **Make sure that the wire harness is tight. It is very dangerous if looseness in the wire harness results in the instr pnl pass l/door airbag assy coming free due to the shock from the airbag deploying.**
- **Always tie down the instr pnl pass l/door airbag assy with the airbag deployment side facing inside.**

NOTICE:

The tire will be marked by the airbag deployment, so use a redundant tire.

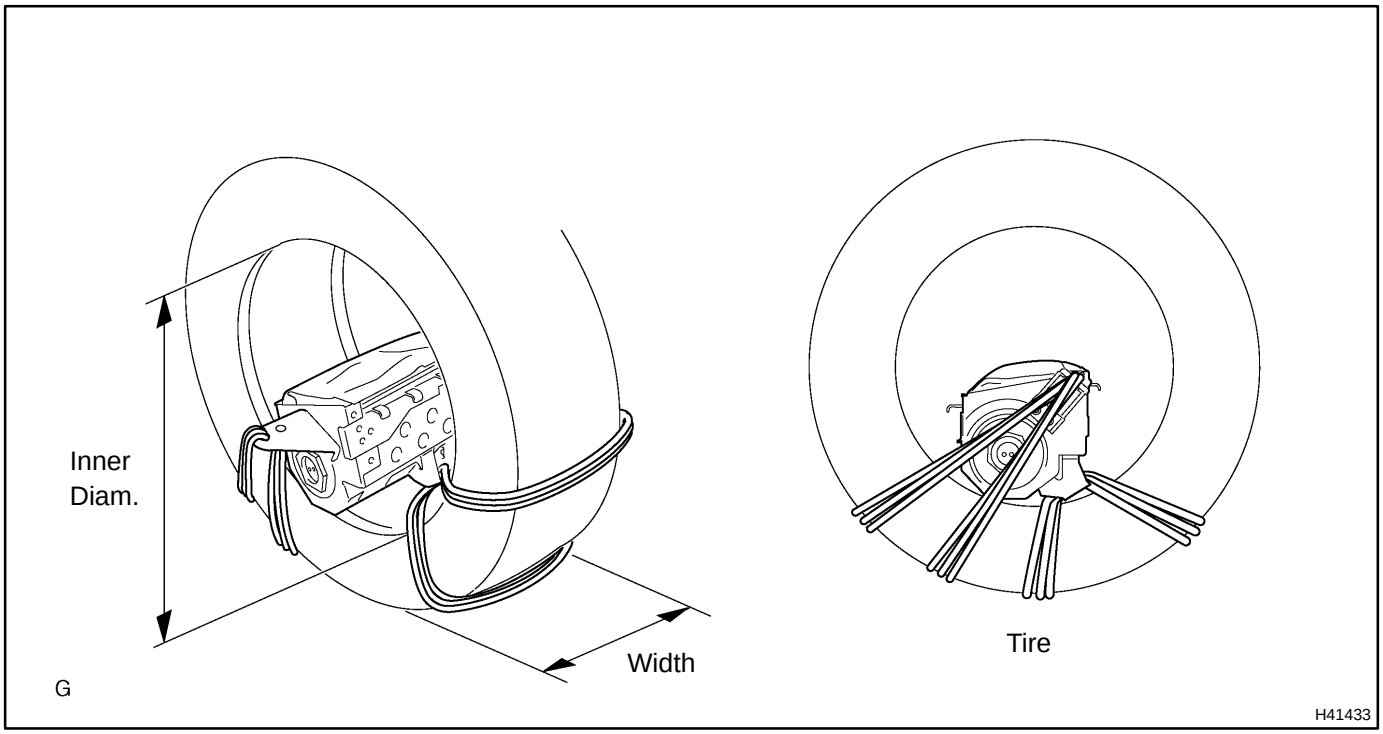

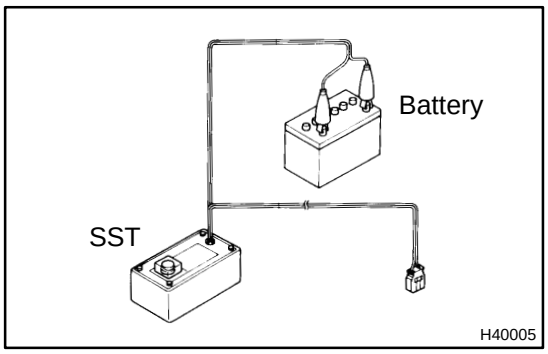

(c) Check functioning of the SST (See step 1–(a) on page 60–17).

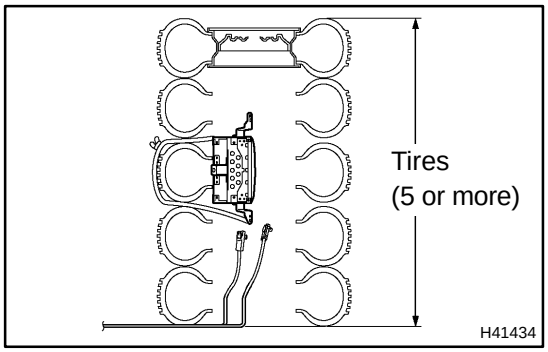

(d) Place tires.

(1) Place at least 2 tires under the tire to which the instr pnl pass l/door airbag assy is tied.

(2) Place at least 2 tires over the tire to which the instr pnl pass l/door airbag assy is tied. The top tire should have the wheel installed.

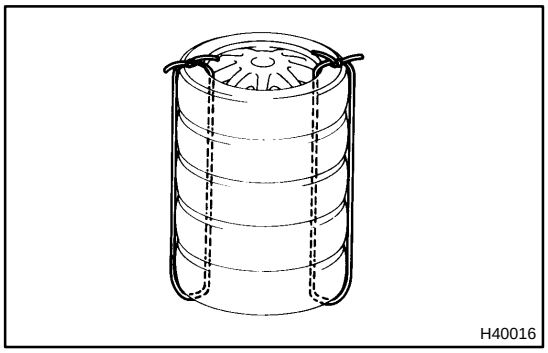

(3) Tie the tires together with 2 wire harness.

CAUTION:

Make sure that the wire harness is tight. It is very dangerous if looseness in the wire harness result in the tires coming free due to the shock from the airbag deploying.

HINT:

Place the SST connector and wire harness inside tires. Secure at least 1 m (3 ft) of slack for the wire harness.

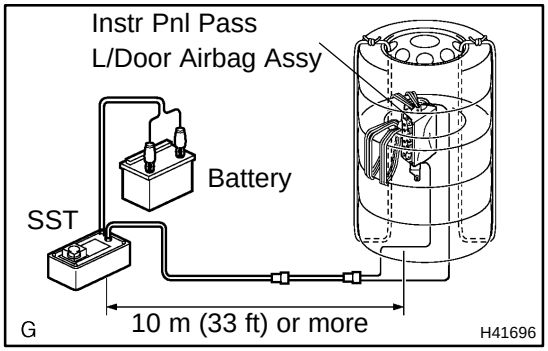

(e) Install the SST.

Connect the connectors of the 2 SST to the instr pnl pass l/door airbag assy connector.

SST 09082–00700, 09082–00801 (09082–10801, 09082–30801)

NOTICE:

To avoid damaging the SST connector and wire harness, do not lock the secondary lock of the twin lock. Also, secure some slack for the SST wire harness inside the tire.

(f) Deploy the airbag.

(1) Connect the SST red clip to the battery positive (+) terminal and the black clip to the battery negative (–) terminal.

(2) Check that no one is within 10 m (33 ft) area around the tire which the instr pnl pass l/door airbag assy is tied to.

(3) Press the SST activation switch and deploy the airbag.

HINT:

The airbag deploys simultaneously as the LED of the SST activation switch lights up.

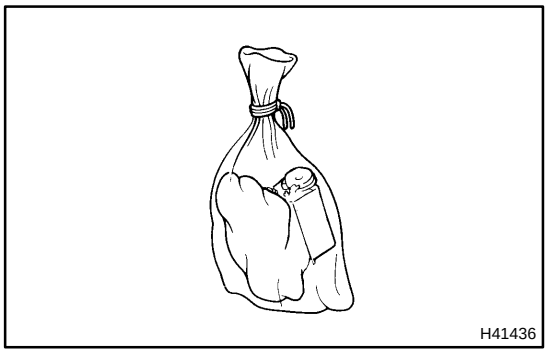

(g) Dispose of the instr pnl pass l/door airbag assy.

CAUTION:

- **The instr pnl pass l/door airbag assy is very hot when the airbag is deployed, so leave it alone for at least 30 minutes after deployment.**
- **Use gloves and safety glasses when handling a instr pnl pass l/door airbag assy with the deployed airbag.**
- **Always wash your hands with water after completing the operation.**
- **Do not apply water, etc. to a instr pnl pass l/door airbag assy with the deployed airbag.**

(1) Remove the instr pnl pass l/door airbag assy from the tire.

(2) Place the instr pnl pass l/door airbag assy in a vinyl bag, tie the end tightly and dispose of it in the same way as other general parts disposal.

CURTAIN SHIELD AIR BAG ASSY LH

6007M–01

COMPONENTS

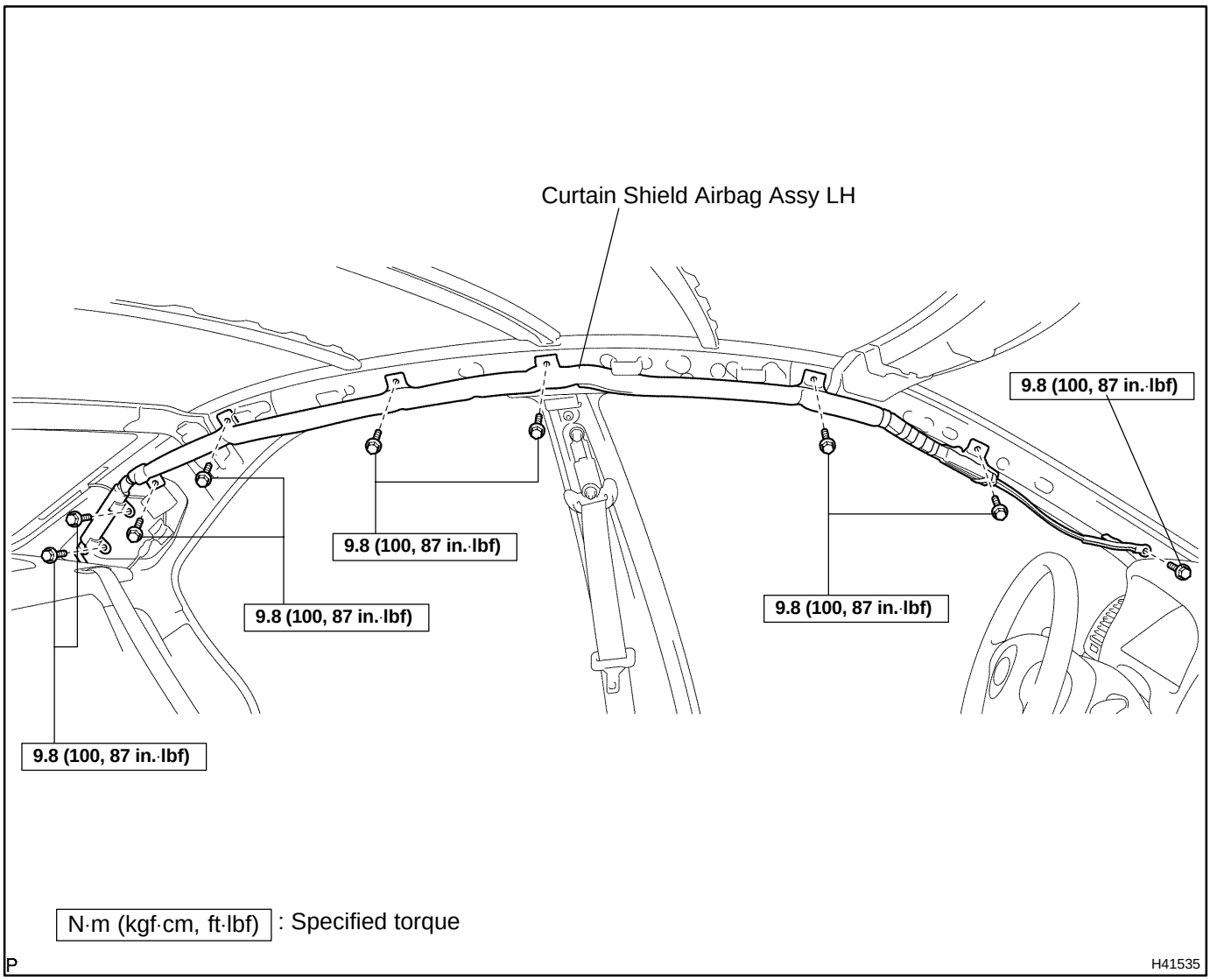

REPLACEMENT

HINT:

COMPNENTS: See page 60–40

1. **PRECAUTION(See page 60–1)**
2. **DISCONNECT BATTERY NEGATIVE TERMINAL(See page 60–1)**
3. **REMOVE FRONT DOOR SCUFF PLATE RH (See page 71–12)**
4. **REMOVE FRONT DOOR SCUFF PLATE LH (See page 71–12)**
5. **REMOVE REAR DOOR SCUFF PLATE RH (See page 61–7)**
6. **REMOVE REAR DOOR SCUFF PLATE LH (See page 61–7)**
7. **REMOVE FRONT SEAT ASSEMBLY RH(See page 72–7)**
8. **REMOVE FRONT SEAT ASSEMBLY LH(See page 72–7)**
9. **REMOVE REAR SEAT CUSHION ASSY(See page 72–34)**
10. **REMOVE REAR SEAT BACK ASSY(See page 72–34)**
11. **REMOVE CONSOLE PANEL UPPER REAR (See page 71–12)**
12. **REMOVE RR CONSOLE BOX(See page 71–12)**
13. **REMOVE CONSOLE PANEL UPPER (See page 71–12)**
14. **REMOVE CONSOLE BOX FRONT(See page 72–7)**
15. **REMOVE AIR DUCT REAR NO.1 (See page 55–29)**
16. **REMOVE AIR DUCT REAR NO.2 (See page 55–29)**
17. **REMOVE CONSOLE BOX DUCT NO.1 (See page 55–29)**
18. **REMOVE FLOOR SHIFT ASSY**
19. **REMOVE FRONT DOOR OPENING TRIM WEATHERSTRIP RH (See page 76–20)**
20. **REMOVE FRONT DOOR OPENING TRIM WEATHERSTRIP LH (See page 76–20)**
21. **REMOVE REAR DOOR OPENING TRIM WEATHERSTRIP RH (See page 76–20)**
22. **REMOVE REAR DOOR OPENING TRIM WEATHERSTRIP LH (See page 76–20)**
23. **REMOVE CENTER PILLAR GARNISH LOWER RH (See page 76–20)**
24. **REMOVE CENTER PILLAR GARNISH LOWER LH (See page 76–20)**
25. **REMOVE CENTER PILLAR GARNISH UPPER RH (See page 76–20)**
26. **REMOVE CENTER PILLAR GARNISH UPPER LH (See page 76–20)**
27. **REMOVE ROOF SIDE GARNISH INNER RH (See page 76–20)**

28. **REMOVE ROOF SIDE GARNISH INNER LH**
    (See page 76–20)
29. **REMOVE FRONT PILLAR GARNISH RH**
    (See page 76–20)
30. **REMOVE FRONT PILLAR GARNISH LH**
    (See page 76–20)
31. **REMOVE ASSIST GRIP SUB–ASSY**
    (See page 76–20)
32. **REMOVE RH VISOR ASSY**
    (See page 76–20)
33. **REMOVE LH VISOR ASSY**
    (See page 76–20)
34. **REMOVE INNER REAR VIEW MIRROR ASSY**
    (See page 76–20)
35. **REMOVE ROOF CONSOLE BOX ASSY**
    (See page 76–20)
36. **REMOVE ROOM LAMP ASSY NO.1**
    (See page 76–20)
37. **REMOVE VISOR HOLDER**
    (See page 76–20)
38. **REMOVE ROOF HEADLINING ASSY**
    (See page 76–20)

39. REMOVE CURTAIN SHIELD AIR BAG ASSY LH

(a) Disconnect the connector of the curtain shield airbag assy LH.
(b) Remove the 9 bolts and curtain shield airbag assy LH.
HINT:
Remove the bolts from front side of the vehicle in order.

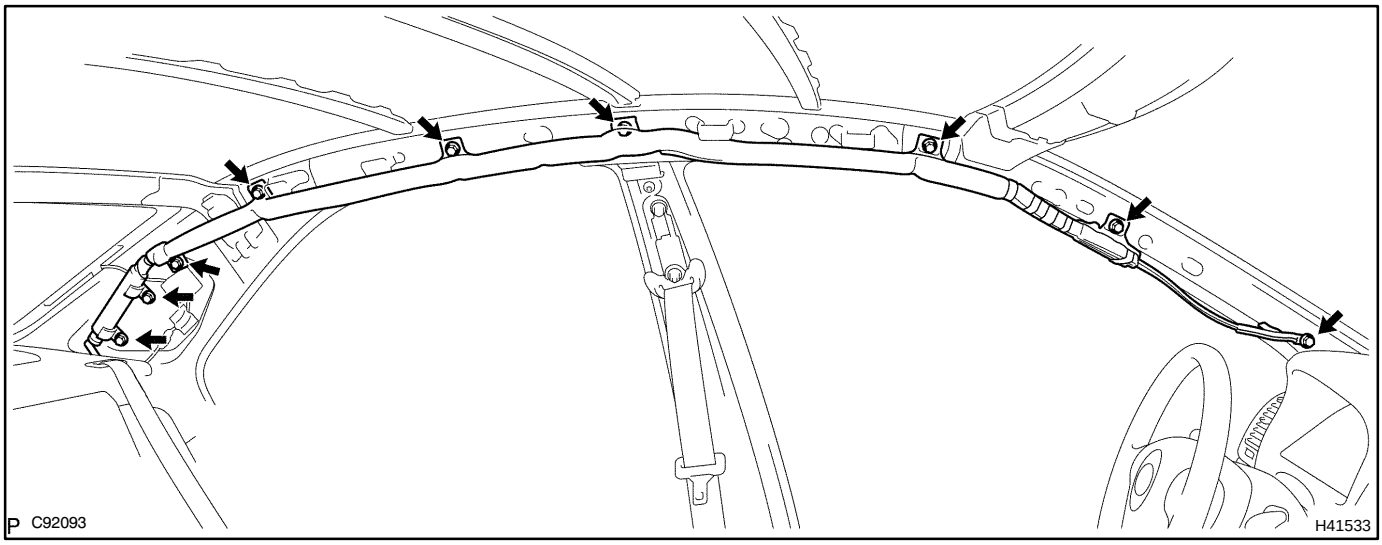

40. INSPECT CURTAIN SHIELD AIR BAG ASSY LH
(See page 60–9)
41. INSTALL CURTAIN SHIELD AIR BAG ASSY LH

(a) Install the curtain shield airbag assy LH with the 9 bolts.
Torque: 9.8 N·m (100 kgf·cm, 87 in.·lbf)
HINT:
Install the bolts from rear side of the vehicle in order.
(b) Connect the curtain shield airbag assy LH connector.

42. INSTALL ROOF HEADLINING ASSY
(See page 76–20)
43. INSTALL REAR SEAT BACK ASSY(See page 72–34)
44. INSTALL REAR SEAT CUSHION ASSY(See page 72–34)
45. INSTALL FRONT SEAT ASSEMBLY LH(See page 72–7)
46. INSTALL FRONT SEAT ASSEMBLY RH(See page 72–7)
47. INSPECT SRS WARNING LIGHT(See page 05–690)

6007O–01

DISPOSAL

HINT:

When scrapping vehicle equipped with an SRS or disposing of a curtain shield airbag assy, always first deploy the airbag in accordance with the procedure described below. If any abnormality occurs with the airbag deployment, contact the SERVICE DEPT. of TOYOTA MOTOR SALES, U.S.A., INC.

CAUTION:

- **Never dispose of a curtain shield airbag assy which has an undeployed airbag.**
- **The airbag produces a sizeable exploding sound when it deploys, so perform the operation out–of–doors and where it will not create a nuisance to nearby residents.**

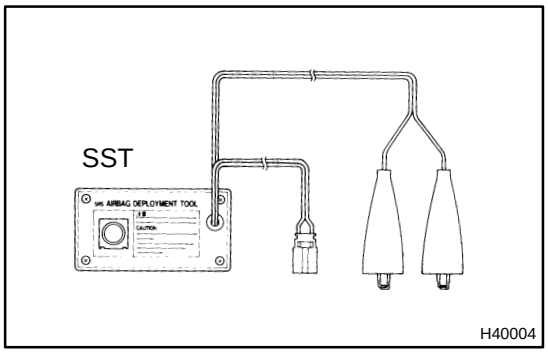

- **When deploying the airbag, always use the specified SST (SRS Airbag Deployment Tool). Perform the operation in a place away from electrical noise.**
- **When deploying an airbag, perform the operation at least 10 m (33 ft) away from the curtain shield airbag assy.**
- **The curtain shield airbag assy is very hot when the airbag is deployed, so leave it alone for at least 30 minutes after deployment.**
- **Use gloves and safety glasses when handling a curtain shield airbag assy with the deployed airbag.**
- **Always wash your hands with water after completing the operation.**
- **Do not apply water, etc. to a curtain shield airbag assy with the deployed airbag.**

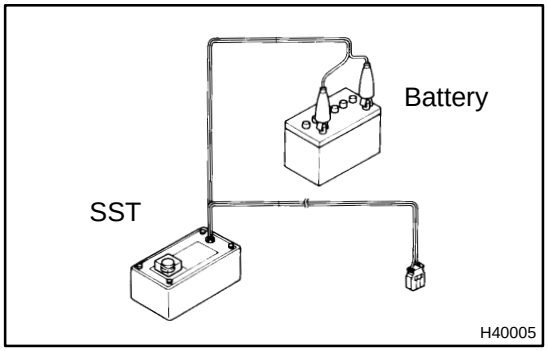

1. DISPOSE CURTAIN SHIELD AIR BAG ASSY LH(WHEN SCRAPPING VEHICLE DEPLOYMENT METHOD)

HINT:

Have a battery ready as the power source to deploy the airbag.

(a) Check functioning of the SST (See step 1–(a) on page 60–17).

(b) Disconnect the airbag connector.

(1) Remove the rear seat cushion.

(2) Remove the rear side seat back LH.

(3) Remove the roof side inner garnish LH.

(4) Disconnect the curtain shield airbag connector.

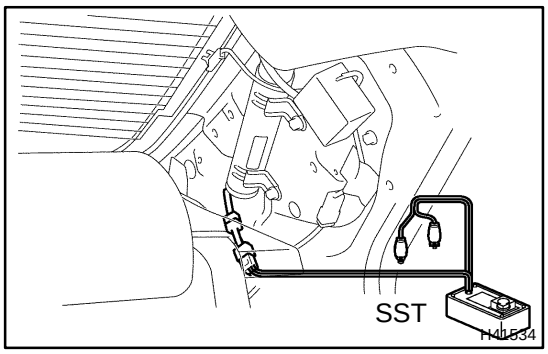

(c) Install the SST.

(1) Connect the connectors of the 2 SST to the curtain shield airbag assy LH connector.

SST 09082–00700, 09082–00801 (09082–10801, 09082–20801)

NOTICE:

To avoid damaging the SST connector and wire harness, do not lock the secondary lock of the twin lock.

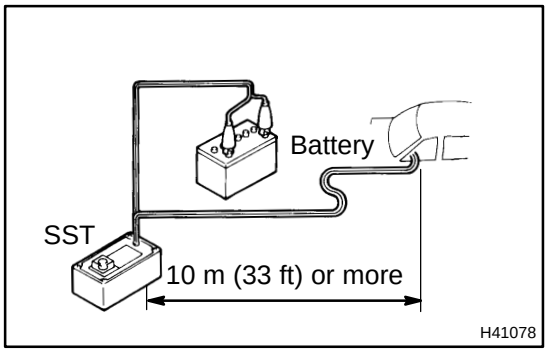

(2) Move the SST to at least 10 m (33 ft) away from the rear of the vehicle.

(3) Close all the doors and windows of the vehicle.

NOTICE:

Take care not to damage the SST wire harness.

(4) Connect the red clip of the SST to the battery positive (+) terminal and the black clip to the negative (–) terminal.

(d) Deploy the airbag.

(1) Confirm that no one is inside the vehicle or within 10 m (33 ft) area around the vehicle.

(2) Press the SST activation switch and deploy the airbag.

HINT:

The airbag deploys simultaneously as the LED of the SST activation switch lights up.

(e) Dispose of the curtain shield airbag assy LH.

CAUTION:

- **The curtain shield airbag assy is very hot when the airbag is deployed, so leave it alone for at least 30 minutes after deployment.**
- **Use gloves and safety glasses when handling a curtain shield airbag assy with the deployed airbag.**
- **When moving a vehicle for scrapping which has a curtain shield airbag assy with the deployed airbag, use gloves and safety glasses.**
- **Do not apply water, etc. to a curtain shield airbag assy with the deployed airbag.**
- **Always wash your hands with water after completing the operation.**

HINT:

When scrapping a vehicle, deploy the airbag and scrap the vehicle with the curtain shield airbag assy still installed.

2. DISPOSE CURTAIN SHIELD AIR BAG ASSY LH(WHEN DISPOSING OF AIRBAG ASSEMBLY DEPLOYMENT METHOD)

NOTICE:

- **When disposing of the curtain shield airbag assy LH only, never use the customer's vehicle to deploy the airbag.**
- **Be sure to follow the procedure given below when deploying the airbag.**

HINT:
Have a battery ready as the power source to deploy the airbag.

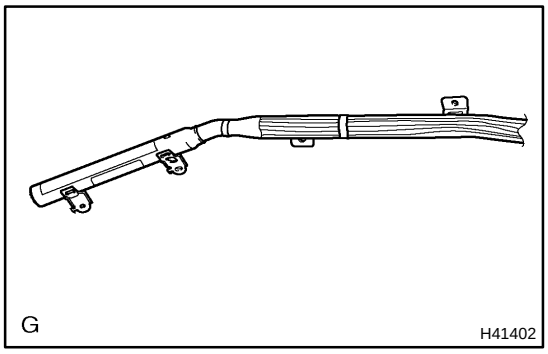

(a) Remove the curtain shield airbag assy (See page 60–41).

CAUTION:
When removing the curtain shield airbag assy, work must be started 90 seconds after the ignition switch is turned to the "LOCK" position and the negative (–) terminal cable is disconnected from the battery.

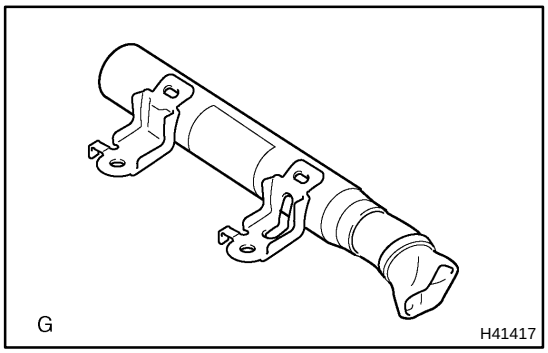

(b) Cut off the deployment section in airbag from inflator.

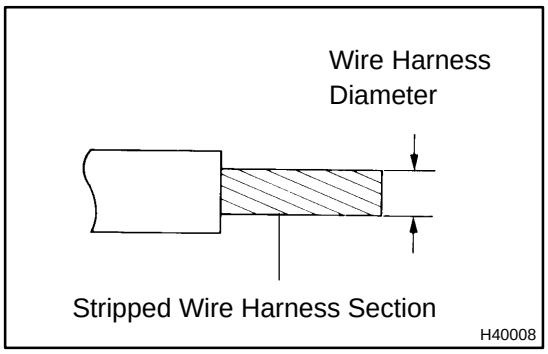

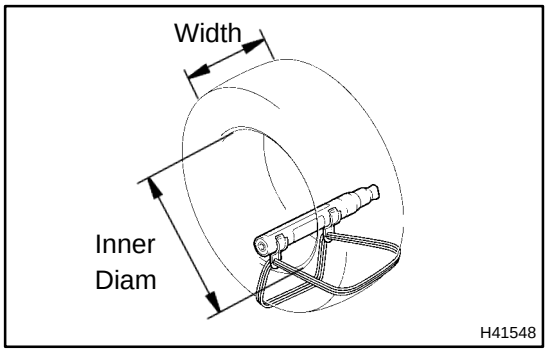

(c) Using a service–purpose wire harness for the vehicle, tie down the curtain shield airbag assy to the tire.

Wire harness: Stripped wire harness section 1.25 mm^2 or more (0.0019 $in.^2$ or more)

CAUTION:

If the curtain shield airbag assy is tied down with too thin wire harness, it may snap. This is highly dangerous. Always use a wire harness which is at least 1.25 mm^2 (0.0019 $in.^2$).

HINT:

To calculate the square of the stripped wire harness section:

Square = 3.14 X (Diameter)^2 divided by 4

Position the curtain shield airbag assy LH inside the tire with the airbag deployment side facing inside.

Tire size: Must exceed the following dimensions–
Width: 185 mm (7.28 in.)
Inner diameter: 360 mm (14.17 in.)

CAUTION:

- **Make sure that the wire harness is tight. It is very dangerous if looseness in the wire harness results in the curtain shield airbag assy LH coming free due to the shock from the airbag deploying.**
- **Always tie down the curtain shield airbag assy LH with the airbag deployment side facing inside.**

NOTICE:

The tire will be marked by the airbag deployment, so use a redundant tire.

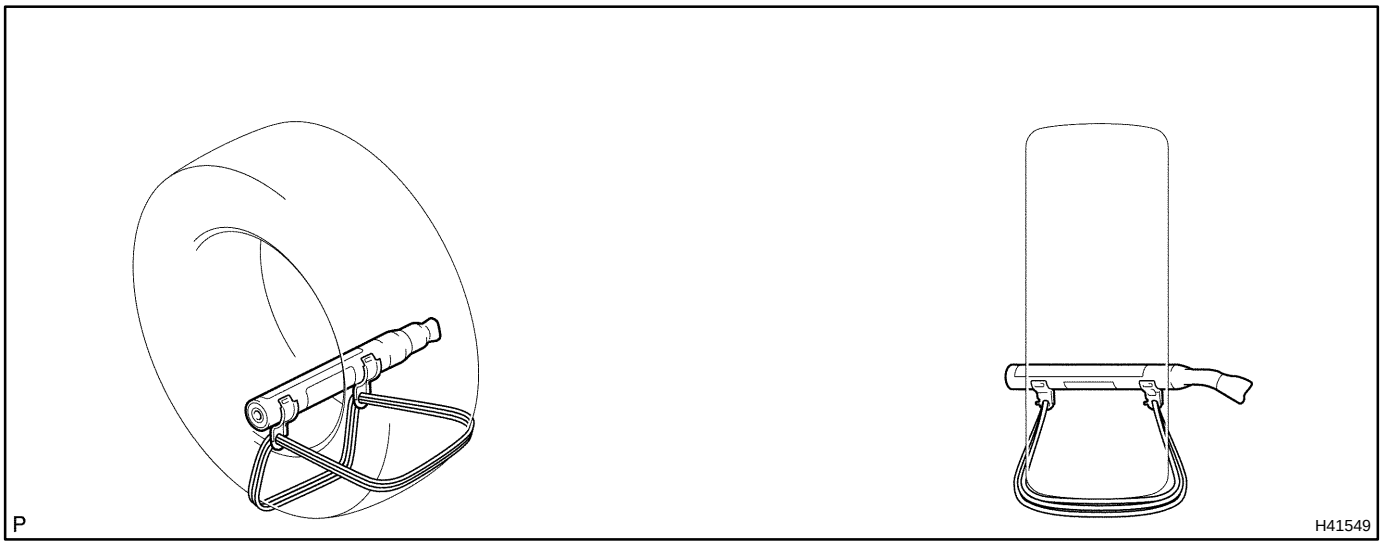

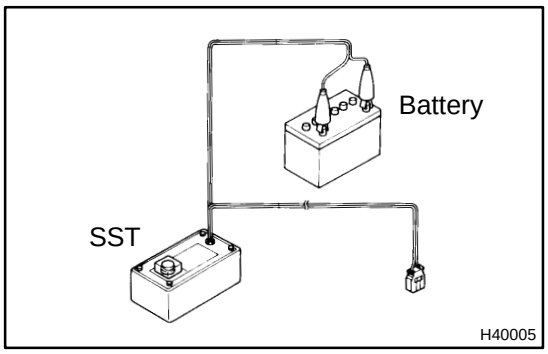

(d) Check functioning of the SST (See step 1–(a) on page 60–17).

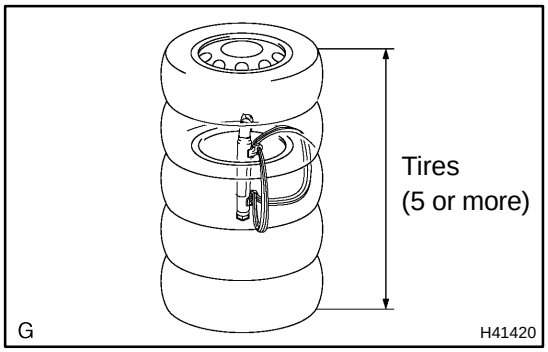

(e) Place the tires.

CAUTION:

Place the tire so that the deployment direction of the curtain shield airbag assy RH will be downward.

(1) Place at least 2 tires under the tire to which the curtain shield airbag assy LH is tied.

(2) Place at least 2 tires over the tire to which the curtain shield airbag assy is tied. The top tire should have the wheel installed.

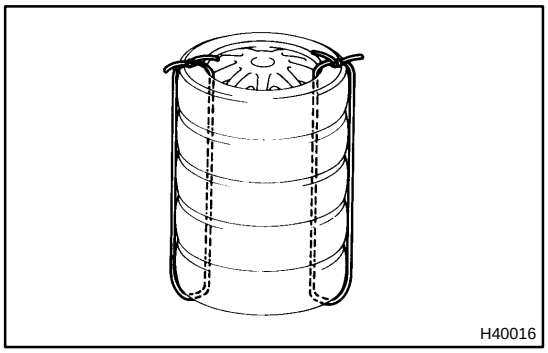

(3) Tie the tires together with 2 wire harness.

CAUTION:

Make sure that the wire harness is tight. It is very dangerous if looseness in the wire harness result in the tires coming free due to the shock from the airbag deploying.

HINT:

Place the SST connector and wire harness inside tires. Secure at least 1 m (3 ft) of slack for the wire harness.

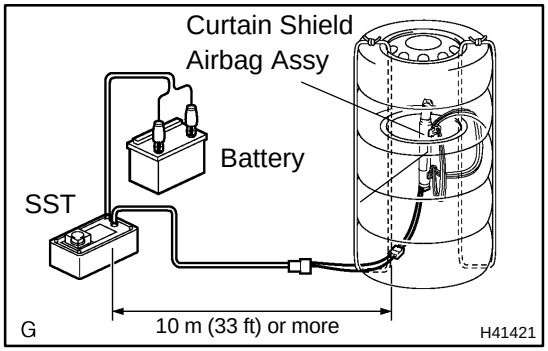

(f) Install the SST.

Connect the connectors of the 3 SST to the curtain shield airbag assy connector.

SST 09082–00700, 09082–00801 (09082–10801, 09082–20801)

NOTICE:

To avoid damaging the SST connector and wire harness, do not lock the secondary lock of the twin lock.

Also, secure some slack for the SST wire harness inside the tire.

(g) Deploy the airbag.

(1) Connect the SST red clip to the battery positive (+) terminal and the black clip to the battery negative (–) terminal.

(2) Check that no one is within 10 m (33 ft) area around the tire which the curtain shield airbag assy is tied to.

(3) Press the SST activation switch and deploy the airbag.

HINT:

The airbag deploys simultaneously as the LED of the SST activation switch lights up.

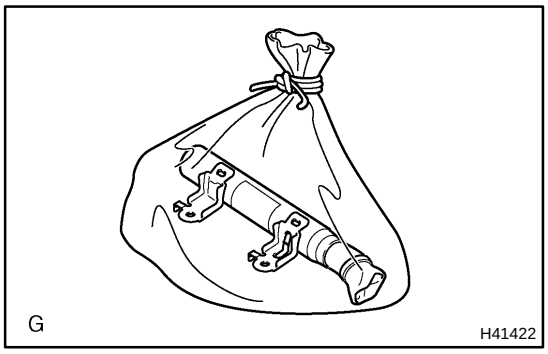

(h) Dispose of the curtain shield airbag assy.

CAUTION:

- **The curtain shield airbag assy is very hot when the airbag is deployed, so leave it alone for at least 30 minutes after deployment.**
- **Use gloves and safety glasses when handling a curtain shield airbag assy with the deployed airbag.**
- **Always wash your hands with water after completing the operation.**
- **Do not apply water, etc. to a curtain shield airbag assy with the deployed airbag.**

(1) Remove the curtain shield airbag assy from the tire.

(2) Place the curtain shield airbag assy in a vinyl bag, tie the end tightly and dispose of it in the same way as other general parts disposal.

FRONT SEAT AIRBAG ASSY RH

6007P–01

DISPOSAL

HINT:

When scrapping vehicles equipped with an SRS or disposing of the front seat airbag assy always first deploy the airbag in accordance with the procedure described below. If any abnormality occurs with the airbag deployment, contact the SERVICE DEPT. of TOYOTA MOTOR SALES, U.S.A., INC.

When disposing of a front seat airbag assy with an airbag deployed in a collision, follow the same procedure given in step 1–(e) in ”DISPOSAL”.

CAUTION:

- **Never dispose of a front seat airbag assy which has an undeployed airbag.**
- **The airbag produces a sizeable exploding sound when it deploys, so perform the operation out of doors and where it will not create a nuisance to nearby residents.**

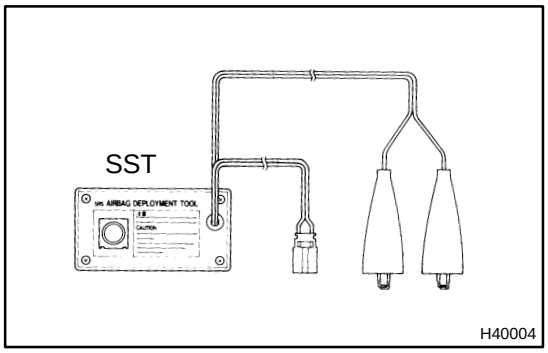

- **When deploying the airbag, always use the specified SST (SRS Airbag Deployment Tool), perform the operation in a place away from electrical noise.**
- **When deploying an airbag, perform the operation at least 10 m (33 ft) away from the airbag assy.**
- **The front seat airbag assy is very hot when the airbag is deployed, so leave it alone for at least 30 minutes after deployment.**
- **Use gloves and safety glasses when handling front seat airbag assy with the deployed airbag.**
- **Always wash your hands with water after completing the operation.**
- **Do not apply water, etc. to a front seat airbag assy with the deployed airbag.**

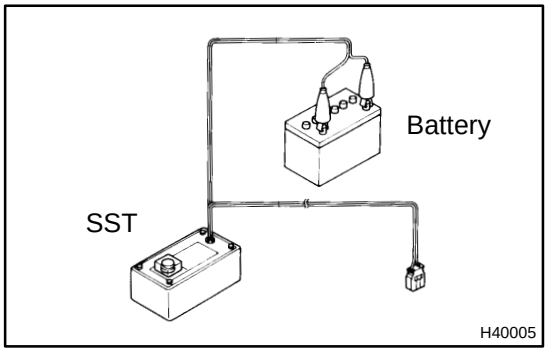

1. DISPOSE FRONT SEAT AIRBAG ASSY RH(WHEN SCRAPPING VEHICLE DEPLOYMENT METHOD)

HINT:

Have a battery ready as the power source to deploy the airbag.

(a) Check functioning of the SST (See page 60–17).

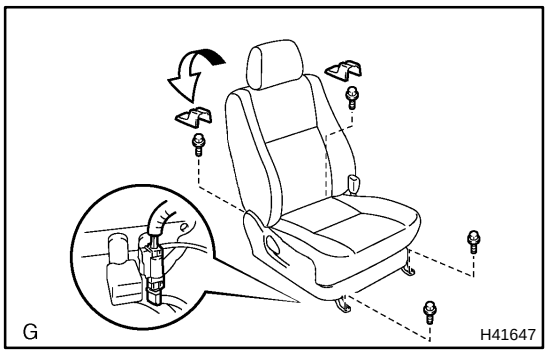

(b) Remove the front seat assy (See page 72–7).
(c) Disconnect the front seat airbag connector.

NOTICE:
When handling the airbag connector, take care not to damage the airbag wire harness.

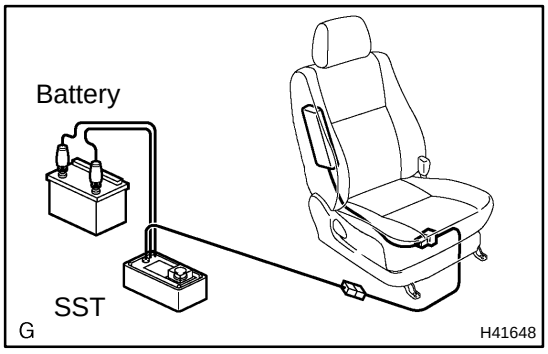

(d) Install the SST.
(1) Connect the connectors of the 2 SST connector to the front seat airbag connector.
SST 09082–00700, 09082–00750

NOTICE:
To avoid damaging the SST connector and wire harness, do not lock the secondary lock of the twin lock.

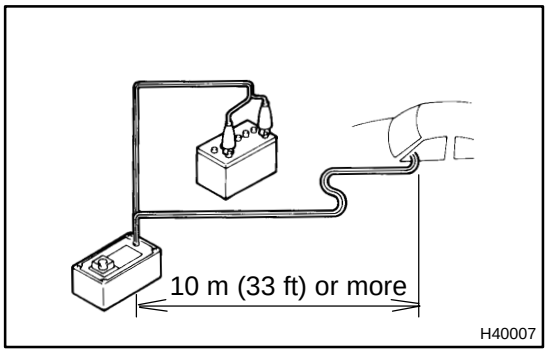

(2) Move the SST to at least 10 m (33 ft) away from the front of the vehicle.
(3) Close all the doors and windows of the vehicle.

NOTICE:
Take care not to damage the SST wire harness.

(4) Connect the red clip of the SST to the battery positive (+) terminal and the black clip of the SST to the battery negative (–) terminal.

(e) Deploy the airbag.
(1) Confirm that no one is inside the vehicle or within 10 m (33 ft) area around the vehicle.
(2) Press the activation switch of the SST and deploy the airbag.

HINT:
The airbag deploys simultaneously as the LED of the SST activation switch lights up.

(f) Dispose of the front seat airbag assy.

CAUTION:
- **The front seat airbag assy is very hot when the airbag is deployed, so leave it alone for at least 30 minutes after deployment.**
- **Use gloves and safety glasses when handling a front seat airbag assy with the deployed airbag.**
- **When moving a vehicle for scrapping which has a front seat airbag assy with the deployed airbag, use gloves and safety glasses.**
- **Do not apply water, etc. to a front seat airbag assy with the deployed airbag.**
- **Always wash your hands with water after completing the operation.**

HINT:
When scrapping a vehicle, deploy the airbag and scrap the vehicle with the front seat airbag assy still installed.

2. DISPOSE FRONT SEAT AIRBAG ASSY RH(WHEN DISPOSING OF AIRBAG ASSEMBLY DEPLOYMENT METHOD)

NOTICE:

- **When disposing of the front seat airbag assy only, never use the customer's vehicle to deploy the airbag.**
- **Be sure to follow the procedure given below when deploying the airbag.**

HINT:
Have a battery ready as the power source to deploy the airbag.

(a) Remove the front seat airbag assy.
  (1) Remove the 2 nuts and front seat airbag assy from the seatback assembly.

CAUTION:
Store the front seat airbag assy with the airbag deployment side facing upward.

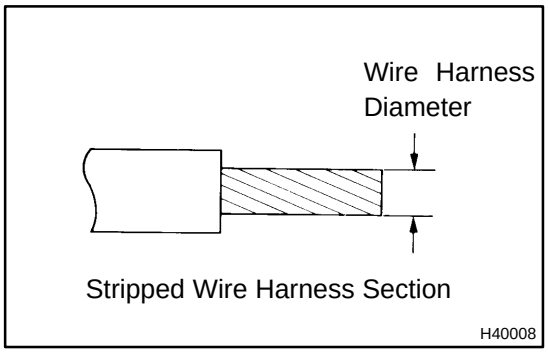

(b) Using a service–purpose wire harness, tie down the front seat airbag assy.
  Wire harness: Stripped wire harness section 1.25 mm^2 or more (0.0019 in^2 or more)

HINT:
To calculate the square of the stripped wire harness section :
Square = 3.14 x $(Diameter)^2$ divided by 4

CAUTION:
If a wire harness which is too thin or some other thing is used to tie down the front seat airbag assy, it may be snapped by the shock when the airbag is deployed. This is highly dangerous. Always use a wire harness for vehicle use which is at least 1.25 mm^2 (0.0019 in^2).

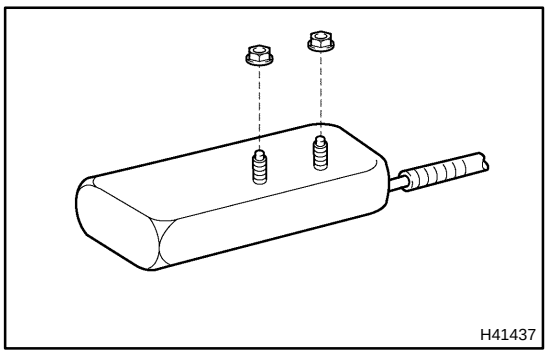

  (1) Install the 2 nuts in the front seat airbag assy.

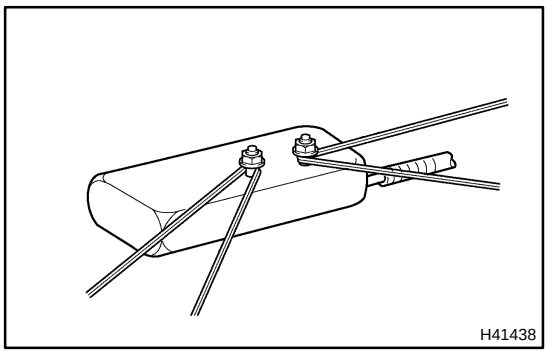
H41438

(2) Wind the wire harness around the stud bolts of the front seat airbag assy as shown in the illustration.

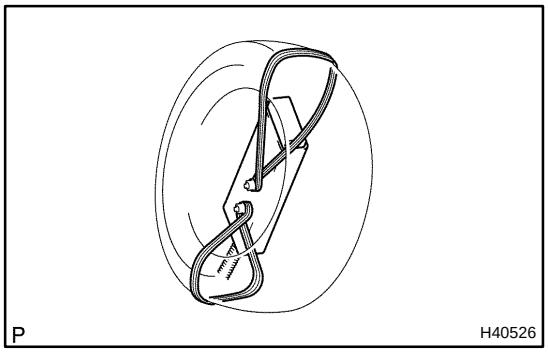
P H40526

(3) Position the front seat airbag assy inside the tire with the airbag deployment direction facing inside.

Tire size : Must exceed the following dimensions:–
Width 185 mm (7.28 in.)
Inner diameter 360 mm (14.17 in.)

CAUTION:

- **Make sure the wire harness is tight. It is very dangerous if looseness in the wire harness results in the front seat airbag assy coming free due to the shock from the airbag deploying.**
- **Always tie down the front seat airbag assy with the airbag door facing inside.**

NOTICE:

The tire will be marked by the airbag deployment, so use the redundant tire.

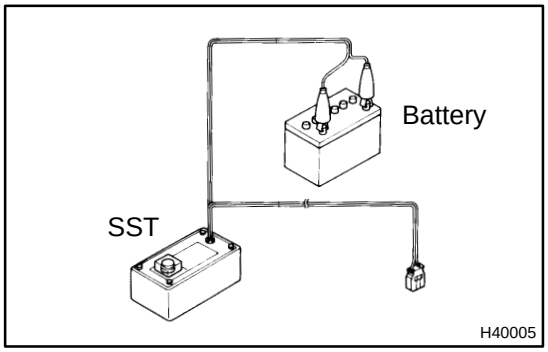

H40005

(c) Check functioning of the SST (See step 1–(a) on page 60–17).
SST 09082–00700

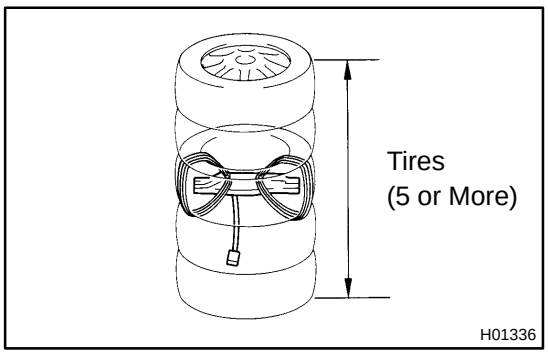

H01336

(d) Place the tires.
(1) Place at least 2 tires under the tire to which the front seat airbag assy is tied.
(2) Place at least 2 tires over the tire to which the front seat airbag assy is tied. The top tire should have the wheel installed.

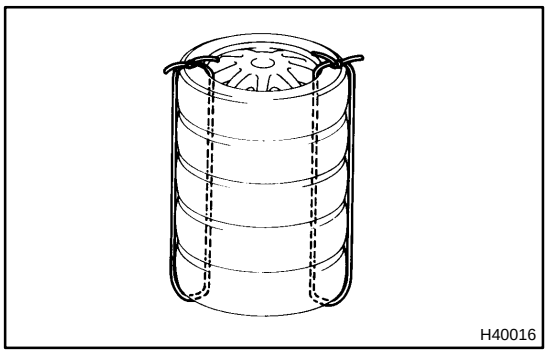
H40016

(3) Tie the tires together with 2 wire harnesses.

CAUTION:

Make sure that the wire harness is tight. It is very dangerous if looseness in the wire harness results in the tires coming free due to the shock from the airbag deploying.

HINT:

Place the SST connector and wire harness inside tires. Secure at least 1 m (3 ft) of slack for the wire harness.

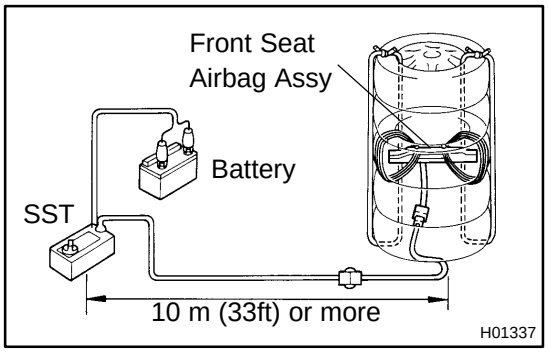

H01337

(e) Install the SST.

Connect the connectors of the 2 SST to the front seat airbag assy connector.

SST 09082–00700, 09082–00750

NOTICE:

To avoid damaging the SST connector and wire harness, do not lock the secondary lock of the twin lock. Also, secure some slack for the SST wire harness inside the tire.

(f) Deploy the airbag.

(1) Connect the SST red clip to the battery positive (+) terminal and the black clip to the battery negative (–) terminal.

(2) Check that no one is within 10 m (33 ft) area around the tire which the front seat airbag assy is tied to.

(3) Press the SST activation switch and deploy the airbag.

HINT:

The airbag deploys simultaneously as the LED of the SST activation switch lights up.

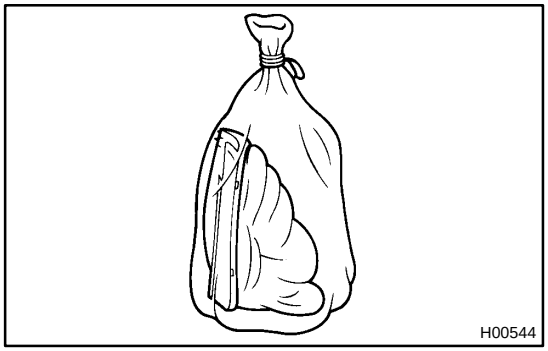
H00544

(g) Dispose of the front seat airbag assy.

CAUTION:

- **The front seat airbag assy is very hot when the airbag is deployed, so leave it alone for at least 30 minutes after deployment.**
- **Use gloves and safety glasses when handling a front seat airbag assy with the deployed airbag.**
- **Do not apply water etc. to a front seat airbag assy with the deployed airbag.**
- **Always wash your hands with water after completing the operation.**

(1) Remove the front seat airbag assy from the tire.

(2) Place the front seat airbag assy in a vinyl bag, tie the end tightly and dispose of it in the same way as other general parts disposal.

AIR BAG SENSOR ASSY CENTER

COMPONENTS

6007Q–01

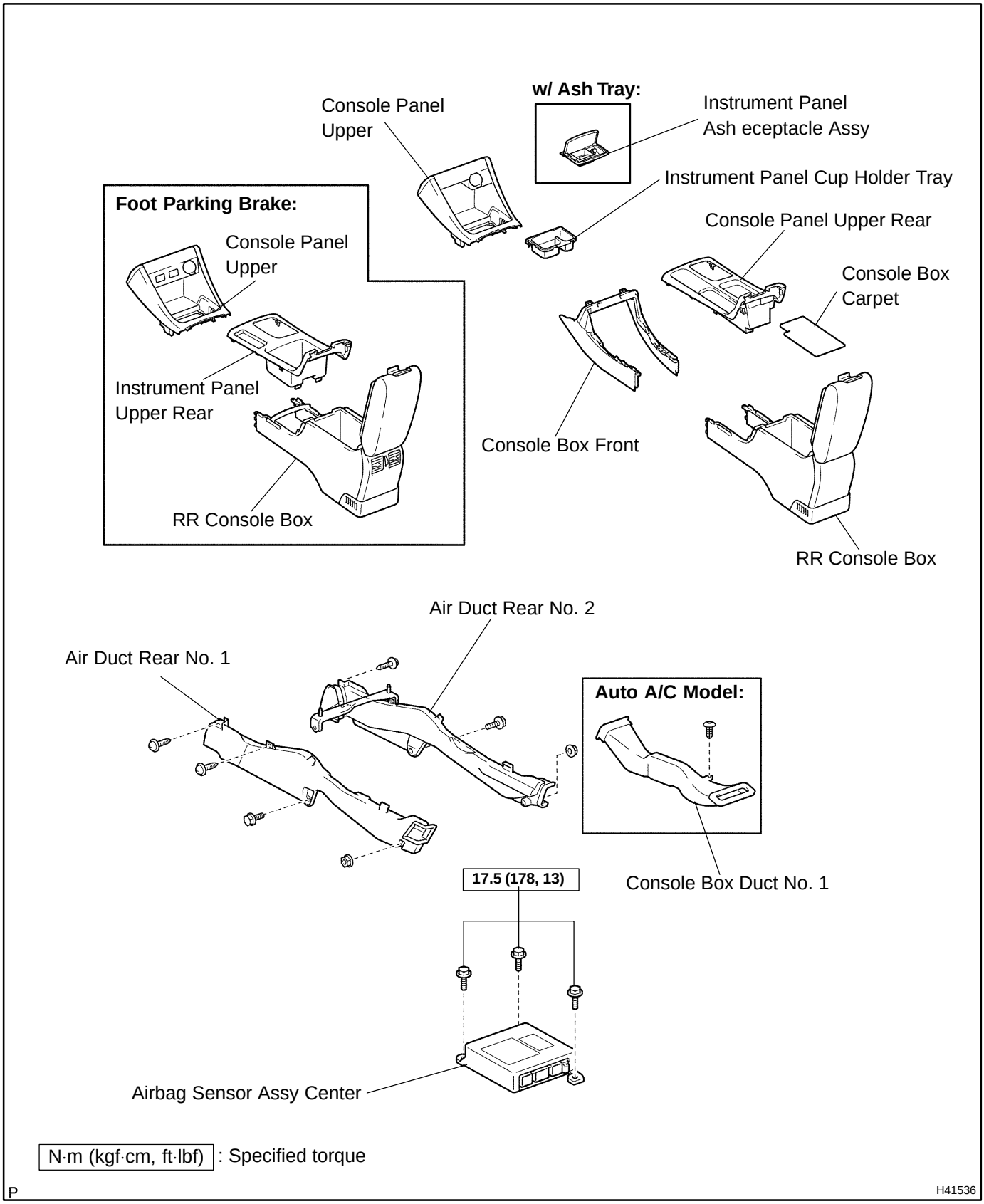

N·m (kgf·cm, ft·lbf) : Specified torque

P

H41536

6007R–01

REPLACEMENT

HINT:

COMPONENTS: See page 60–55

1. **PRECAUTION(See page 60–1)**
2. **DISCONNECT BATTERY NEGATIVE TERMINAL(See page 60–1)**
3. **REMOVE CONSOLE PANEL UPPER REAR (See page 71–12)**
4. **REMOVE CONSOLE BOX CARPET (See page 71–12)**
5. **REMOVE RR CONSOLE BOX(See page 71–12)**
6. **REMOVE INSTRUMENT PANEL CUP HOLDER TRAY(W/O ASHTRAY) (See page 71–12)**
7. **REMOVE INSTRUMENT PANEL ASH RECEPTACLE ASSY(W/ ASHTRAY) (See page 71–12)**
8. **REMOVE CONSOLE PANEL UPPER (See page 71–12)**
9. **REMOVE CONSOLE BOX FRONT (See page 71–12)**
10. **REMOVE AIR DUCT REAR NO.1 (See page 55–29)**
11. **REMOVE AIR DUCT REAR NO.2 (See page 55–29)**
12. **REMOVE CONSOLE BOX DUCT NO.1(AUTO AIR CONDITIONER) (See page 55–29)**

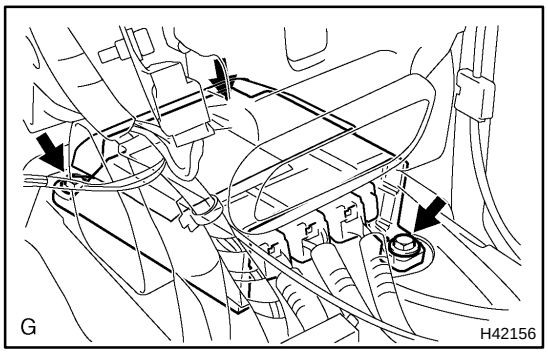

13. **REMOVE AIR BAG SENSOR ASSY CENTER**

(a) Disconnect the 3 connectors from the airbag sensor assy center.
(b) Remove the 3 bolts and air bag sensor assy center.

14. **INSPECT AIR BAG SENSOR ASSY CENTER (See page 60–9)**
15. **INSTALL AIR BAG SENSOR ASSY CENTER**

(a) Check that the ignition switch turn OFF.
(b) Check that the battery negative terminal is disconnected.

NOTICE:

Do not start the operation for 90 seconds after removing the terminal.

(c) Temporarily install the air bag sensor assy center with the 3 bolts.
(d) Tighten the 3 bolts to the specified torque.
Torque: 17.5 N·m (178 kgf·cm, 13 ft·lbf)
(e) Connect the connector to the air bag sensor assy center.
(f) Check that no play is identified.
(g) Check that the water–proof sheet is properly set.

16. **INSPECT SRS WARNING LIGHT(See page 05–690)**

AIR BAG FRONT RH SENSOR

COMPONENTS

6007S–01

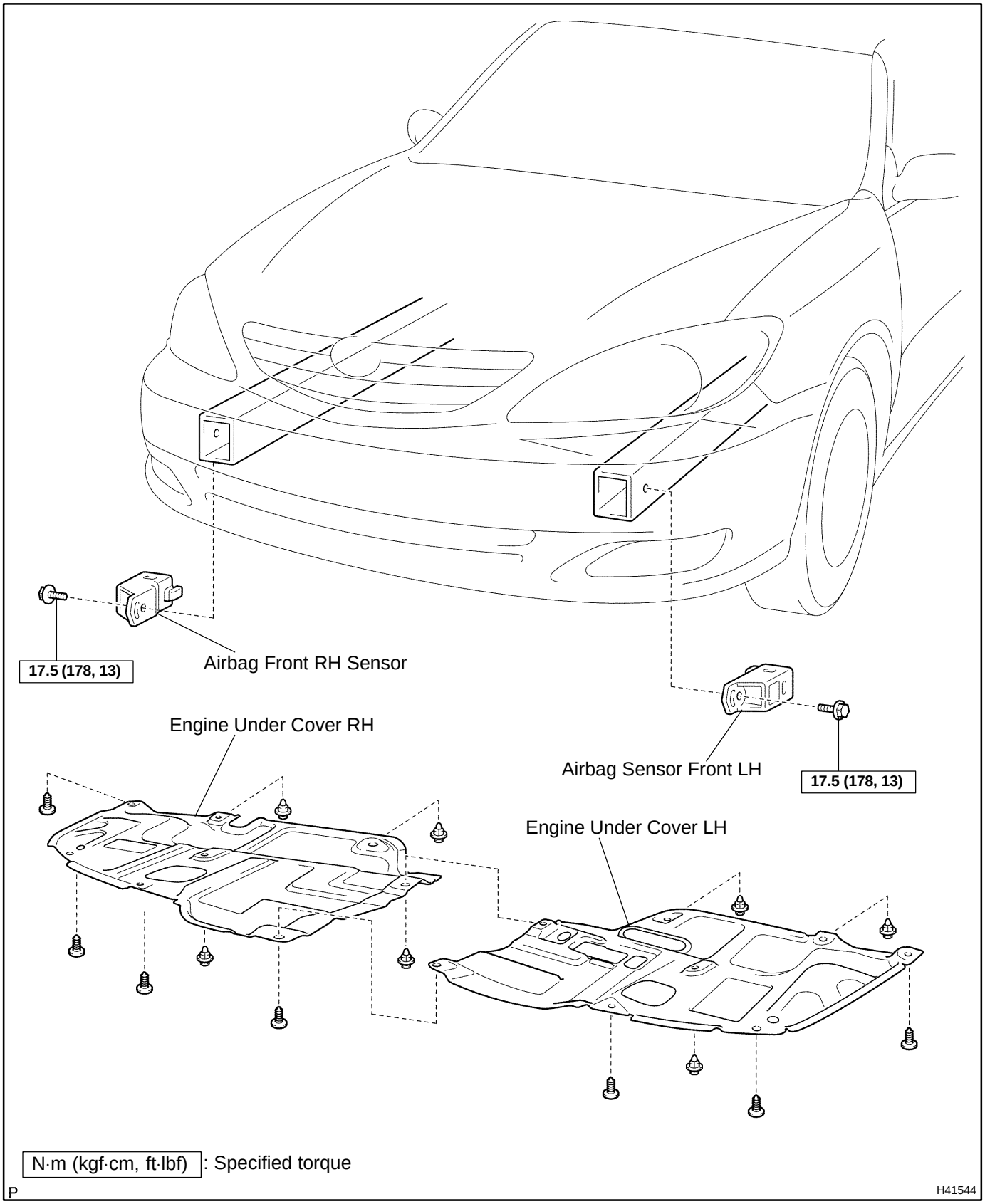

6007T–01

REPLACEMENT

HINT:

COMPONENTS: See page 60–57

1. PRECAUTION(See page 60–1)

2. DISCONNECT BATTERY NEGATIVE TERMINAL(See page 60–1)

3. REMOVE ENGINE UNDER COVER RH

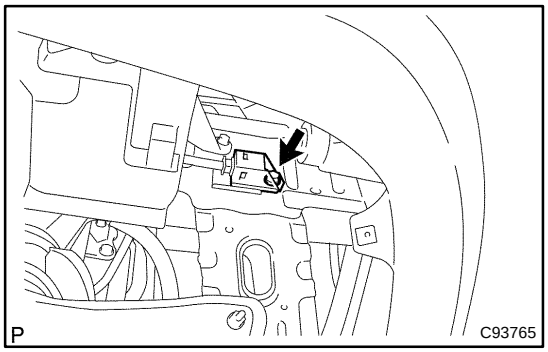

4. REMOVE AIR BAG FRONT RH SENSOR

(a) Remove the bolt and front airbag sensor RH.

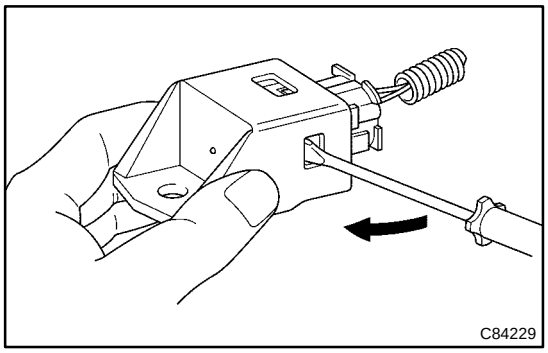

(b) Disconnect the connector from the front airbag sensor RH.

HINT:

Insert a screw driver in any of the three opening sections of the sensor and slide the sensor to disconnect it from the connector.

5. INSPECT AIR BAG FRONT RH SENSOR (See page 60–9)

6. INSTALL AIR BAG FRONT RH SENSOR

(a) Check that the ignition switch trun OFF.

(b) Check that the battery negative (–) terminal is disconnected.

NOTICE:

Do not start the operation for 90 seconds after removing the terminal.

(c) Install the front airbag sensor RH with the bolt.
Torque: 17.5 N·m (178 kgf·cm, 13 ft·lbf)

(d) Connect the connector to the front airbag sensor RH.

(e) Check that no play is identified.

7. INSPECT SRS WARNING LIGHT(See page 05–690)

AIR BAG SENSOR FRONT LH

6007U–01

COMPONENTS

(See page 60–57)

6007V–01

REPLACEMENT

HINT:

COMPONENTS: See page 60–57

1. PRECAUTION(See page 60–1)

2. DISCONNECT BATTERY NEGATIVE TERMINAL(See page 60–1)

3. REMOVE ENGINE UNDER COVER LH

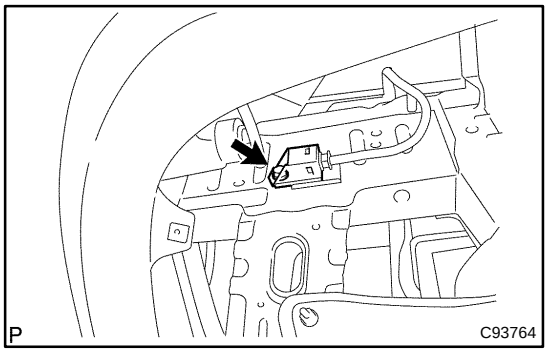

4. REMOVE AIR BAG SENSOR FRONT LH

(a) Remove the bolt and front airbag sensor LH.

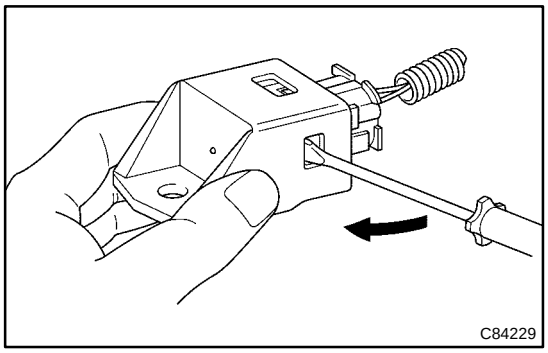

(b) Disconnect the connector from the front airbag sensor LH.

HINT:

Insert a screw driver in any of the three opening sections of the sensor and slide the sensor to disconnect it from the connector.

5. INSPECT AIR BAG SENSOR FRONT LH (See page 60–9)

6. INSTALL AIR BAG SENSOR FRONT LH

(a) Check that the ignition switch is OFF.

(b) Check that the battery negative (–) terminal is disconnected.

NOTICE:

Do not start the operation for 90 seconds after removing the terminal.

(c) Install the front airbag sensor LH with the bolt.
Torque: 17.5 N·m (178 kgf·cm, 13 ft·lbf)

(d) Connect the connector to the front airbag sensor LH.

(e) Check that no play is identified.

7. INSPECT SRS WARNING LIGHT(See page 05–690)

SIDE AIR BAG SENSOR ASSY RH

COMPONENTS

6007W–01

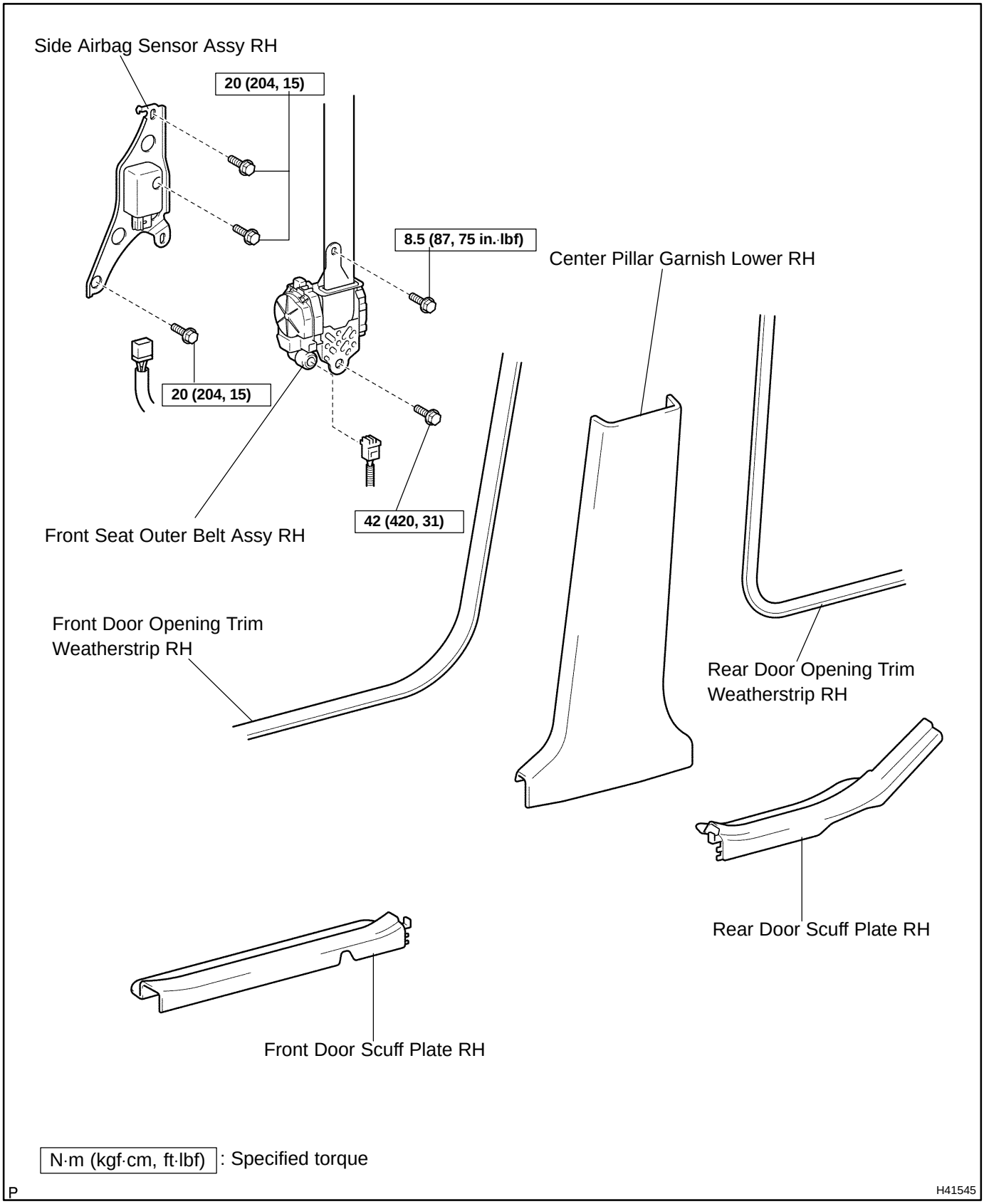

6007X–01

REPLACEMENT

HINT:

COMPONENTS: See page 60–61

1. **PRECAUTION(See page 60–1)**
2. **DISCONNECT BATTERY NEGATIVE TERMINAL(See page 60–1)**
3. **REMOVE FRONT DOOR SCUFF PLATE RH (See page 71–12)**
4. **REMOVE REAR DOOR SCUFF PLATE RH (See page 71–12)**
5. **REMOVE FRONT DOOR OPENING TRIM WEATHERSTRIP RH (See page 61–7)**
6. **REMOVE REAR DOOR OPENING TRIM WEATHERSTRIP RH (See page 61–7)**
7. **REMOVE CENTER PILLAR GARNISH LOWER RH (See page 61–7)**
8. **REMOVE FRONT SEAT OUTER BELT ASSY RH (See page 61–7)**

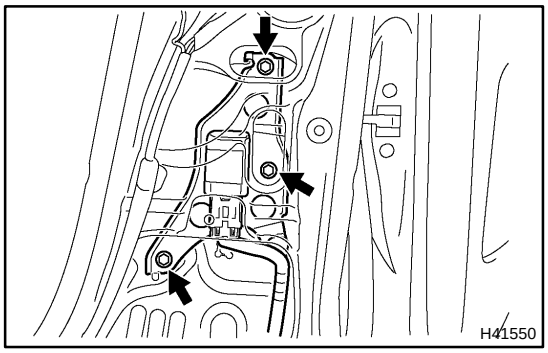

9. **REMOVE SIDE AIR BAG SENSOR ASSY RH**

(a) Disconnect the connector from the side airbag sensor assy RH.

(b) Remove the 3 bolts and side airbag sensor assy RH.

10. **INSPECT SIDE AIR BAG SENSOR ASSY RH (See page 60–9)**
11. **INSTALL SIDE AIR BAG SENSOR ASSY RH**

(a) Install the 3 bolts and side airbag sensor assy RH.
Torque: 20 N·m (204 kgf·cm, 15 ft·lbf)

(b) Connect the side airbag sensor connector.

NOTICE:

- **Installation of the connector is done with the sensor assembly installed. Make sure the sensor assembly is installed with the specified torque.**
- **If the sensor assembly has been dropped, or there are cracks, dents or other defects in the case, bracket or connector, replace the sensor assembly with a new one.**
- **When installing the sensor assembly, take care that the SRS wiring does not interfere with other parts and is not pinched between other parts.**
- **After installation, shake the sensor assembly to check that there is no looseness.**

12. INSTALL FRONT SEAT OUTER BELT ASSY RH

Torque:
Upper bolt: 8.5 N·m (87 kgf·cm, 75 in.·lbf)
Lower bolt: 42 N·m (420 kgf·cm, 31 ft·lbf)

13. INSPECT SRS WARNING LIGHT(See page 05–690)

AIR BAG SENSOR REAR LH

COMPONENTS

6007Y–01

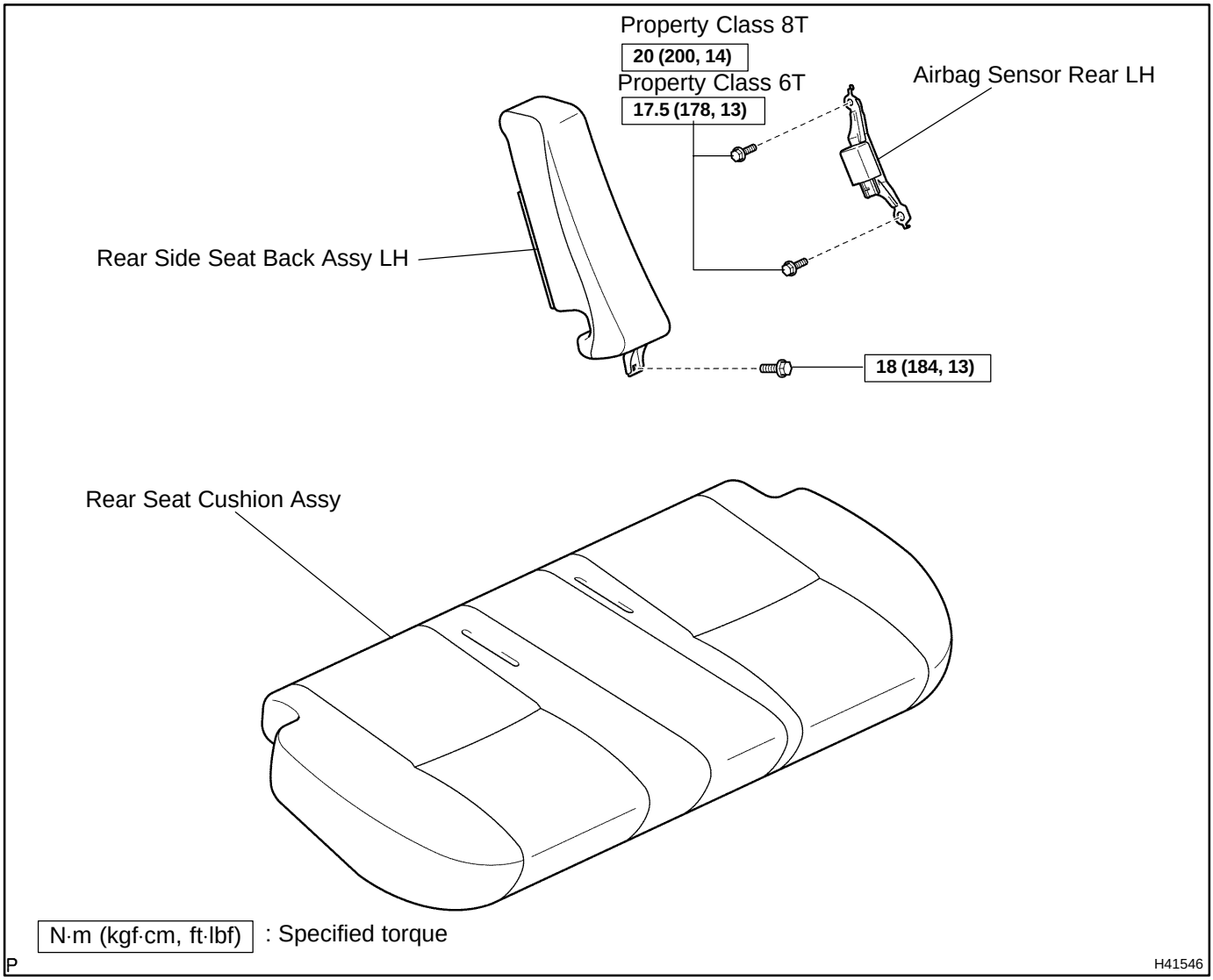

REPLACEMENT

HINT:

COMPNENTS: See page 60–64

1. **PRECAUTION(See page 60–1)**
2. **DISCONNECT BATTERY NEGATIVE TERMINAL(See page 60–1)**
3. **REMOVE CUSHION ASSY, RR SEAT(See page 72–34)**
4. **REMOVE REAR SIDE SEAT BACK ASSY LH (See page 72–34)**

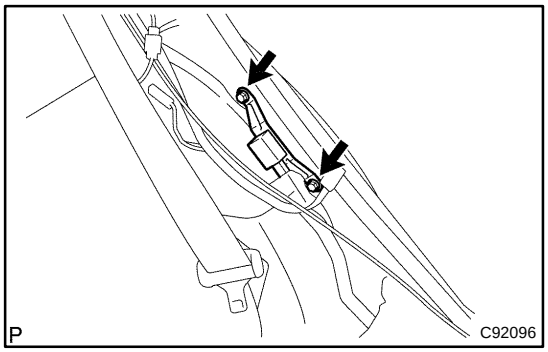

5. **REMOVE AIR BAG SENSOR REAR LH**

(a) Disconnect the connector of the airbag sensor rear LH.
(b) Remove the 2 bolts and the airbag sensor rear LH.

6. **INSTALL AIR BAG SENSOR REAR LH**

(a) Select a suitable bolt (See page 60–1).
(b) Install the airbag sensor rear LH with the 2 bolts.
Torque:
Property class 6T: 17.5 N·m (178 kgf·cm, 13 ft·lbf)
Property class 8T: 20 N·m (200 kgf·cm, 14 ft·lbf)
(c) Connect the connector of the airbag sensor rear LH.

NOTICE:

- **Installation of the connector is done with the sensor assembly installed. Make sure the sensor assembly is installed with the specified torque.**
- **If the sensor assembly has been dropped, or there are cracks, dents or other defects in the case, bracket or connector, replace the sensor assembly with a new one.**
- **When installing the sensor assembly, take care that the SRS wiring does not interfere with other parts and is not pinched between other parts.**
- **After installation, shake the sensor assembly to check that there is no looseness.**

7. **INSPECT AIR BAG SENSOR REAR LH (See page 60–9)**
8. **INSTALL REAR SIDE SEAT BACK ASSY LH (See page 72–34)**
9. **INSPECT SRS WARNING LIGHT(See page 05–690)**

SEAT POSITION AIR BAG SENSOR

60080–01

COMPONENTS

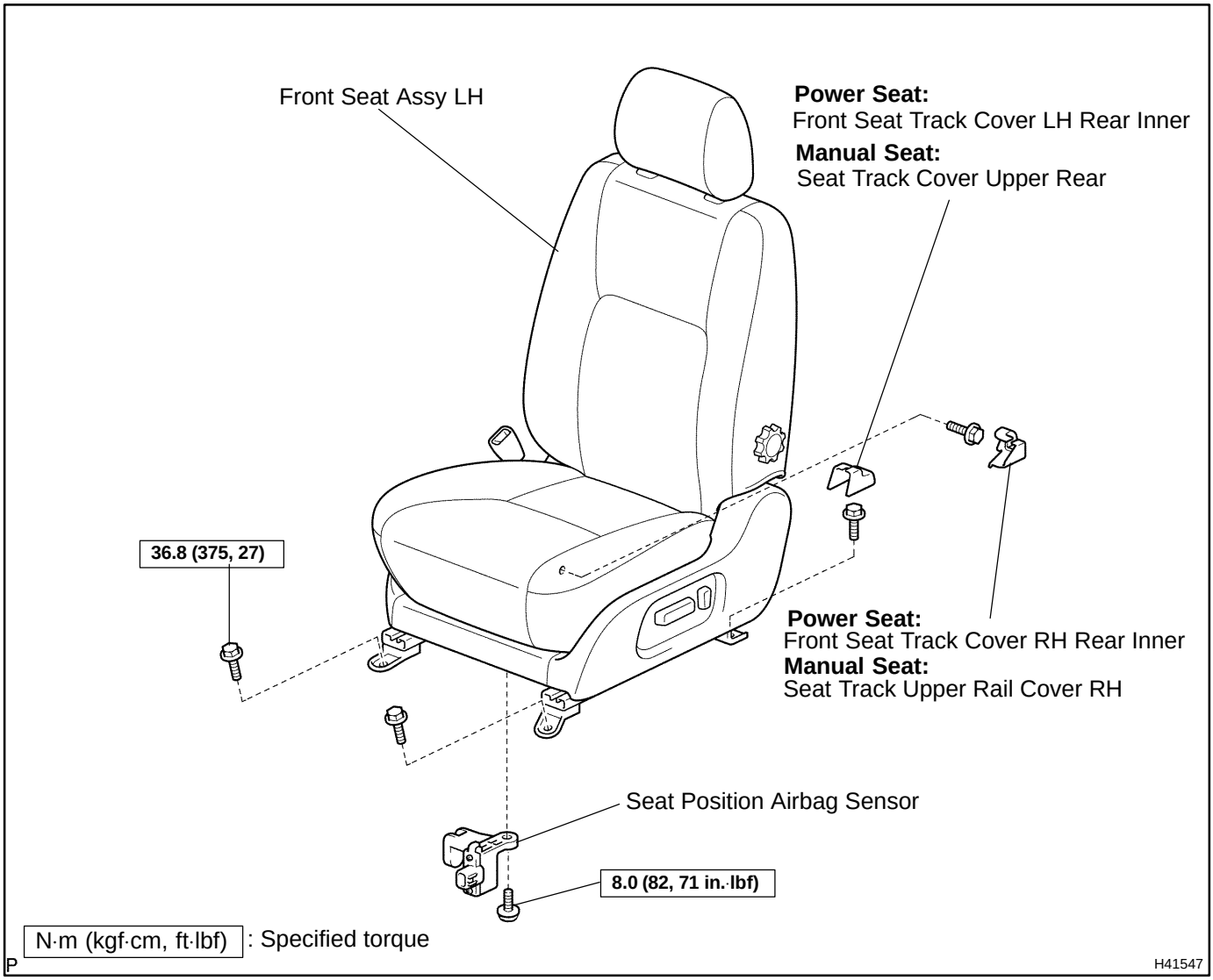

60081–01

REPLACEMENT

HINT:

COMPNENTS: See page 60–66

1. **PRECAUTION(See page 60–1)**
2. **DISCONNECT BATTERY NEGATIVE TERMINAL(See page 60–1)**
3. **REMOVE FRONT SEAT TRACK COVER RH REAR INNER(POWER SEAT)**
4. **REMOVE FRONT SEAT TRACK COVER LH REAR INNER(POWER SEAT)**
5. **REMOVE SEAT TRACK COVER UPPER REAR(MANUAL SEAT)**
6. **REMOVE SEAT TRACK UPPER RAIL COVER RH(MANUAL SEAT)**
7. **REMOVE FRONT SEAT ASSY LH(See page 72–7)**

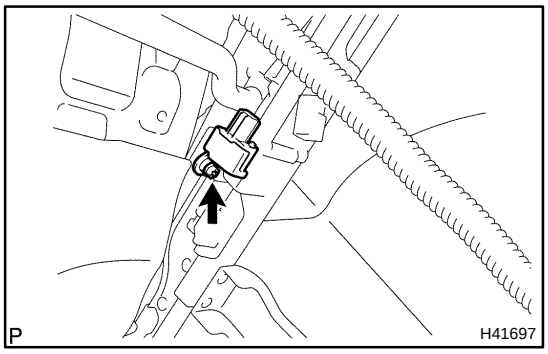

8. **REMOVE SEAT POSITION AIR BAG SENSOR**

(a) Disconnect the connector of the seat position sensor.
(b) Using a torx socket wrench (T30), remove the torx screw and seat position sensor.

9. **INSTALL SEAT POSITION AIR BAG SENSOR**

(a) Using a torx socket wrench (T30), install the seat position sensor with the torx screw.
Torque: 8.0 N·m (82 kgf·cm, 71 in.·lbf)
(b) Connect the connector of the seat position sensor.

NOTICE:

- **Installation of the connector is done with the sensor assembly installed. Make sure the sensor assembly is installed with the specified torque.**
- **If the sensor assembly has been dropped, or there are cracks, dents or other defects in the case, bracket or connector, replace the sensor assembly with a new one.**
- **When installing the sensor assembly, take care that the SRS wiring does not interfere with other parts and is not pinched between other parts.**
- **After installation, shake the sensor assembly to check that there is no looseness.**

10. **INSTALL FRONT SEAT ASSY LH**
Torque: 36.8 N·m (375 kgf·cm, 27 ft·lbf)
11. **SRS WARNING LIGHT(See page 05–690)**

SEAT BELT WARNING SYSTEM

61050–01

LOCATION

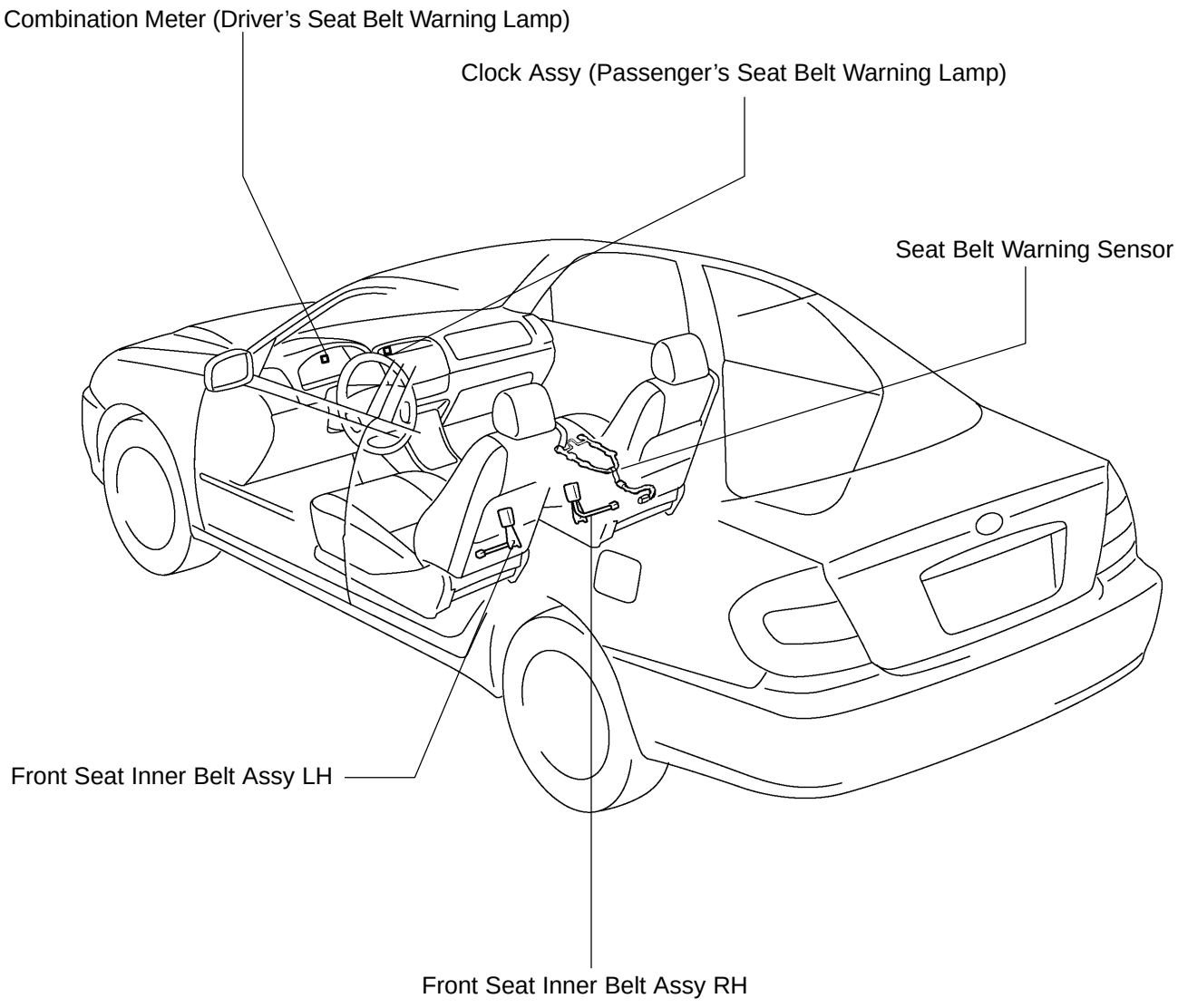

O

B56637

61051–01

PROBLEM SYMPTOMS TABLE

Symptom	Suspected Area	See page
Driver' seat belt warning lamp does not light up	1. GAUGE 10 A Fuse 2. Combination meter 3. Air bag sensor assembly center 4. Front seat inner belt assembly LH 5. Wire harness	 71–25 05–687 61–3
Passenger' seat belt warning lamp does not light up	1. GAUGE 10 A Fuse 2. Clock assembly 3. Front seat inner belt assembly RH 4. Wire harness	 71–26 61–3

INSPECTION

TMC Made

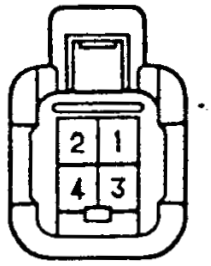

B31196

1. INSPECT FRONT SEAT INNER BELT ASSY LH

(a) When fastening the seat belt (Buckle switch is ON).

(1) Inspect the continuity and resistance between the terminals.

Standard (TMC made):

Terminal No.	Specified condition
1 ⇔ 3	330 Ω

If the result is not as specified, replace the front seat inner belt assembly.

TMMK Made

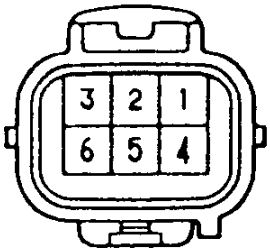

B31270

Standard (TMMK made):

Terminal No.	Specified condition
1 ⇔ 4	330 Ω

If the result is not as specified, replace the front seat inner belt assembly.

TMC Made

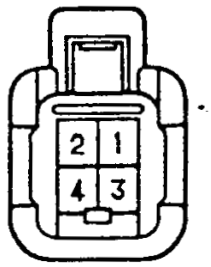

B31196

(b) When releasing the seat belt (Buckle switch is OFF).

(1) Inspect the continuity and resistance between the terminals.

Standard (TMC made):

Terminal No.	Specified condition
1 ⇔ 3	1,330Ω

If the result is not as specified, replace the front seat inner belt assembly.

TMMK Made

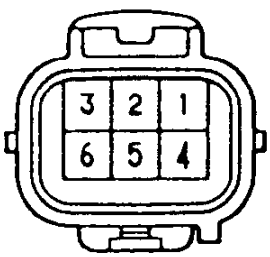

B31270

Standard (TMMK made):

Terminal No.	Specified condition
1 ⇔ 4	1330Ω

If the result is not as specified, replace the front seat inner belt assembly.

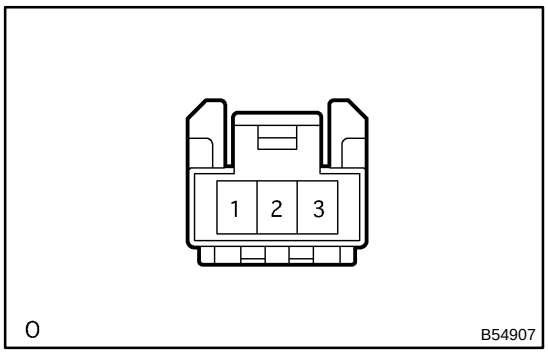

2. INSPECT FRONT SEAT INNER BELT ASSY RH

(a) Short between connector terminals 1 and 3 of the occupation sensor.

TMC Made

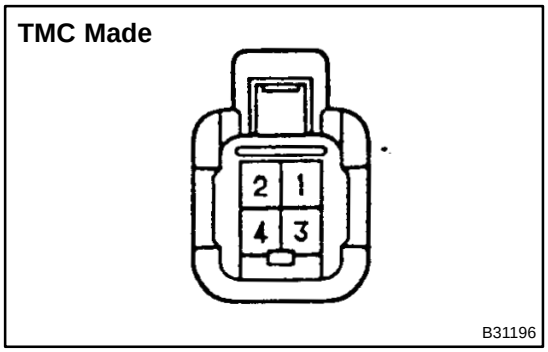

(b) When fastening the seat belt (Buckle switch is ON).

(1) Check the continuity between the connector terminals of the warning switch.

Standard (TMC made):

Terminal No.	Specified condition
1 ⇔ 3	No continuity
2 ⇔ 4	Continuity

If the result is not as specified, replace the front seat inner belt assembly.

TMMK Made

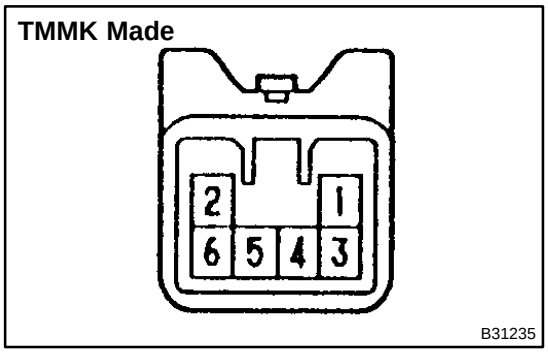

Standard (TMMK made):

Terminal No.	Specified condition
1 ⇔ 3	No continuity

If the result is not as specified, replace the front seat inner belt assembly.

TMC Made

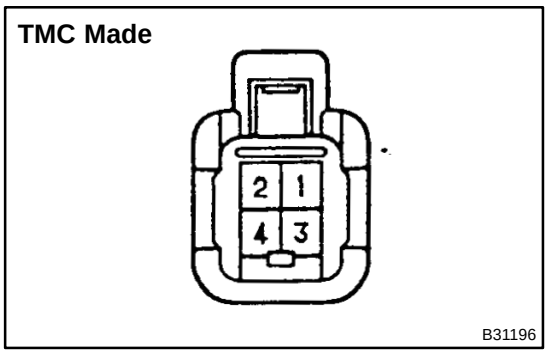

(c) When releasing the seat belt (Buckle switch is OFF).

(1) Check the continuity between the connector terminals of the warning switch.

Standard (TMC made):

Terminal No.	Specified condition
2 ⇔ 4	Continuity
1 ⇔ 3	Continuity

If the result is not as specified, replace the front seat inner belt assembly.

TMMK Made

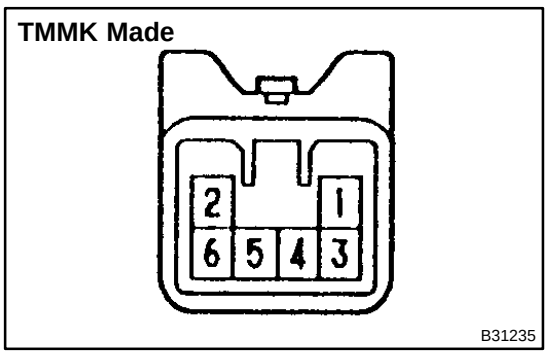

Standard (TMMK made):

Terminal No.	Specified condition
5 ⇔ 4	Continuity
1 ⇔ 3	Continuity

If the result is not as specified, replace the front seat inner belt assembly.

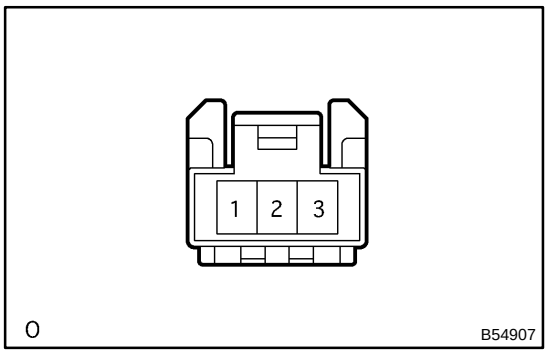

(d) Release the occupation sensor connector.

TMC Made

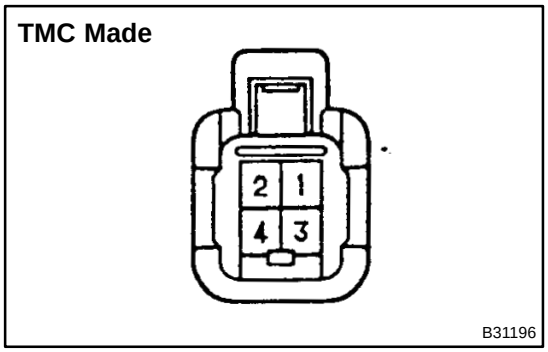

(e) When fastening the seat belt (Buckle switch is ON).
(1) Check the continuity between the connector terminals of the warning switch.

Standard (TMC made):

Terminal No.	Specified condition
2 ⇔ 4	No continuity
1 ⇔ 3	No continuity

If the result is not as specified, replace the front seat inner belt assembly.

TMMK Made

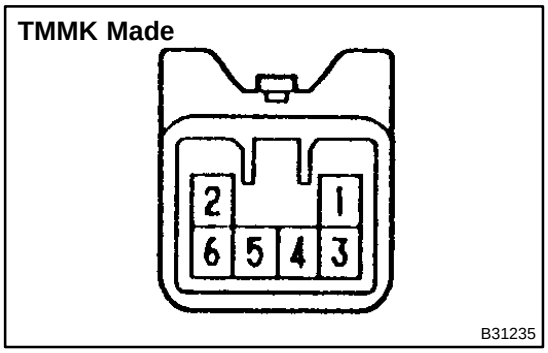

Standard (TMMK made):

Terminal No.	Specified condition
5 ⇔ 4	No continuity
1 ⇔ 3	No continuity

If the result is not as specified, replace the front seat inner belt assembly.

TMC Made

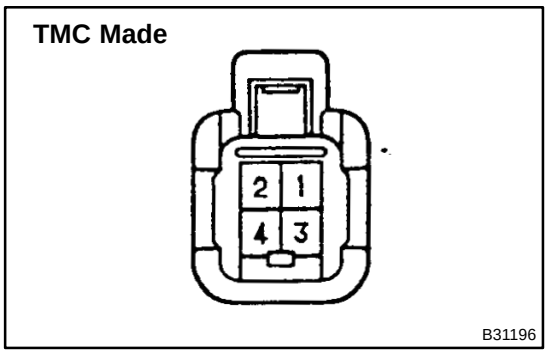

(f) When releasing the seat belt (Buckle switch is OFF).
(1) Check the continuity between the connector terminals of the warning switch.

Standard (TMC made):

Terminal No.	Specified condition
2 ⇔ 4	No continuity
1 ⇔ 3	Continuity

If the result is not as specified, replace the front seat inner belt assembly.

TMMK Made

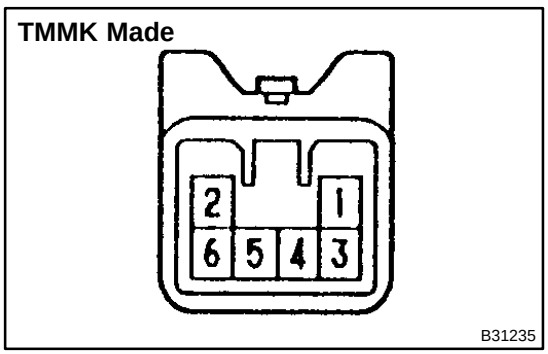

Standard (TMMK made):

Terminal No.	Specified condition
5 ⇔ 4	No continuity
1 ⇔ 3	Continuity

If the result is not as specified, replace the front seat inner belt assembly.

FRONT SEAT BELT

61053–01

COMPONENTS

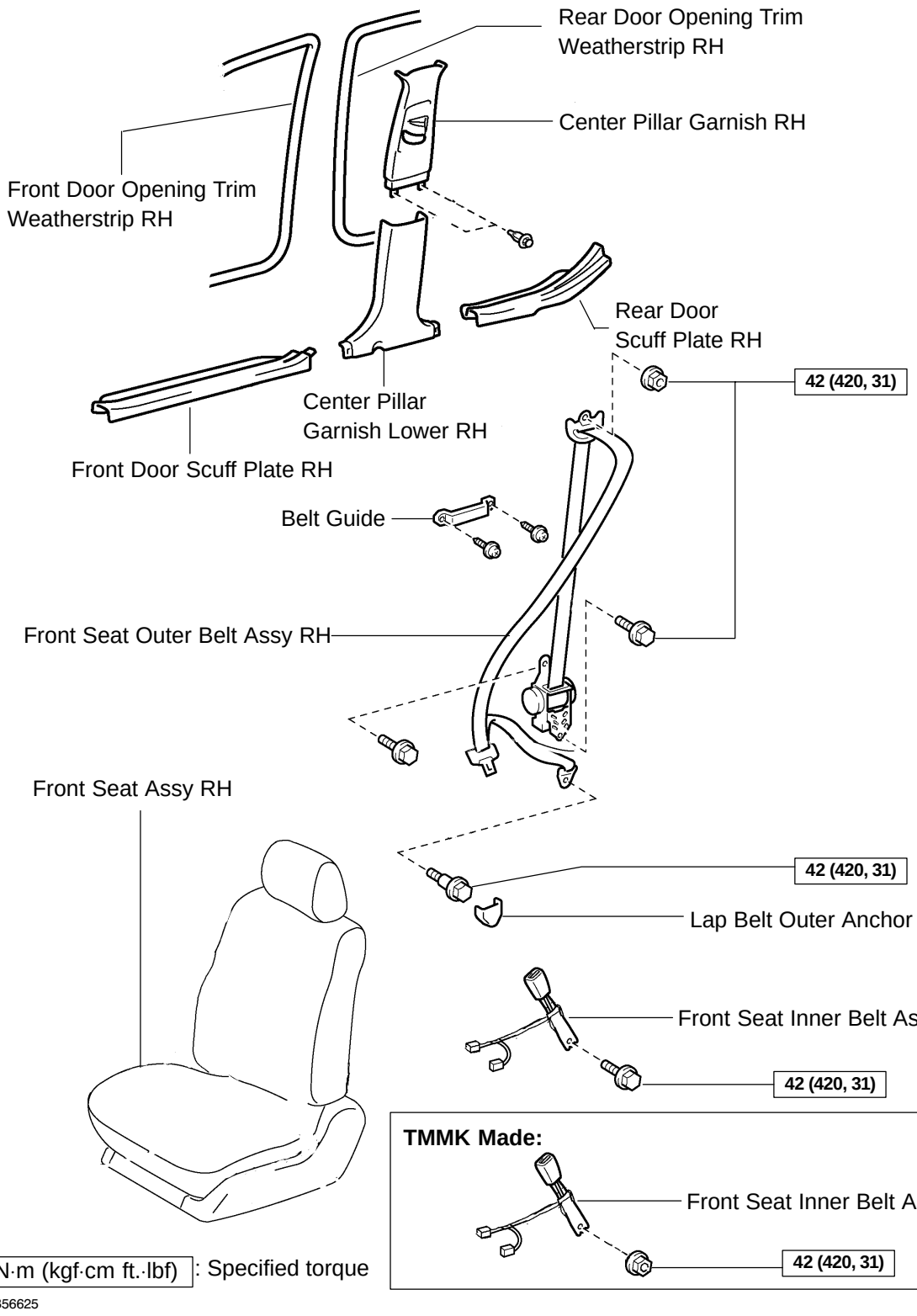

REPLACEMENT

1. **DISCONNECT BATTERY NEGATIVE TERMINAL**
2. **REMOVE FRONT SEAT ASSY RH (See page 72–7)**
3. **REMOVE FRONT DOOR SCUFF PLATE RH (See page 76–20)**
4. **REMOVE FRONT DOOR OPENING TRIM WEATHERSTRIP RH (See page 76–20)**
5. **REMOVE REAR DOOR SCUFF PLATE RH (See page 76–20)**
6. **REMOVE REAR DOOR OPENING TRIM WEATHERSTRIP RH (See page 76–20)**
7. **REMOVE LAP BELT OUTER ANCHOR COVER (See page 76–20)**
8. **REMOVE CENTER PILLAR GARNISH LOWER RH (See page 76–20)**
9. **REMOVE CENTER PILLAR GARNISH UPPER RH (See page 76–20)**

10. REMOVE FRONT SEAT OUTER BELT ASSY RH

NOTICE:

- **Removal operation of the seat belt with pretensioner must be started in 90 seconds or more after the ignition switch is turned OFF and the battery negative terminal is disconnected.**
- **Carefully read the notices for the "pretensioner" in the SRS airbag system and the front seat outer belt assembly.**

(a) Remoe the 2 screws and belt guide.

(b) Remove the nut and the shoulder anchor**.**

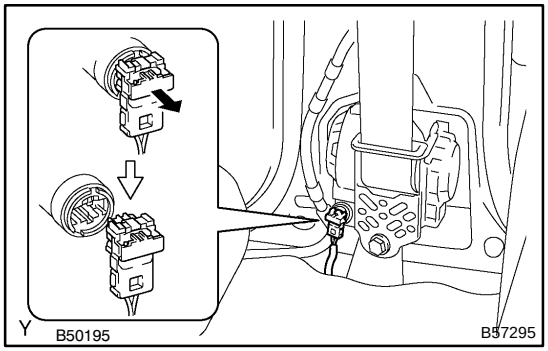

(c) Disconnect the connector.

(1) Using a screwdriver, pull the locking button of the pretensioner connector to your side to release the lock.

HINT:

Tape the screwdriver tip before use.

(d) Remove the 2 bolts and the front seat outer belt assembly.

11. REMOVE FRONT SEAT INNER BELT ASSY RH

(a) Disconnect the connector and clamp.

(b) TMC made:

Remove the bolt and the front seat inner belt assembly.

(c) TMMK made:

Remove the nut and the front seat inner belt assembly.

12. INSTALL FRONT SEAT INNER BELT ASSY RH

(a) TMC made:
Install the front seat inner belt assembly with the bolt.
Torque: 42 N·m (420 kgf·cm, 31 ft·lbf)

(b) TMMK made:
Install the front seat inner belt assembly with the nut.
Torque: 42 N·m (420 kgf·cm, 31 ft·lbf)

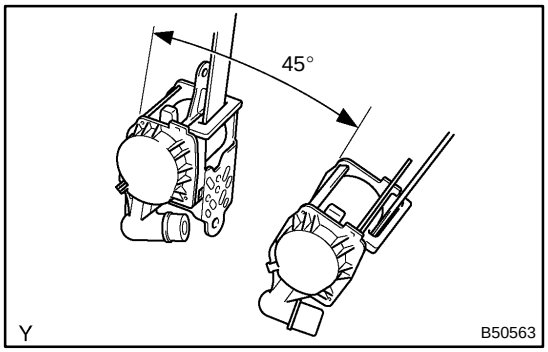

13. INSTALL FRONT SEAT OUTER BELT ASSY RH

(a) Check the degree of tilt when beginning to lock the ELR.
(1) Check the belt will not lock within 15 degrees of tilt in all the direction but the belt will lock over 45 degrees of tilt when moving the installed retractor gently.

NOTICE:
Do not disassemble the retractor.

(b) Install the retractor with the 2 bolts.
Torque:
7.5 N·m (80 kgf·cm, 66 in.·lbf) (Upper part of retractor)
42 N·m (420 kgf·cm, 31 ft·lbf) (Lower part of retractor)

(c) Install the shoulder anchor with the nut.
Torque: 42 N·m (420 kgf·cm, 31 ft·lbf)

(d) Install the floor anchor with the bolt.
Torque: 42 N·m (420 kgf·cm, 31 ft·lbf)

61088–01

DISPOSAL

HINT:

When scrapping vehicles equipped with a seat belt pretensioner or disposing of a front seat outer belt (with seat belt pretensioner) always first active the seat belt pretensioner in accordance with the procedure described below. If any abnormality occurs in the seat belt pretensioner operation, contact the SERVICE DEPT. of the TOYOTA MOTOR SALES, U.S.A., INC. When disposing of a front seat outer belt (with seat belt pretensioner) activated in a collision, follow the same procedure given in step 1–(d) in ”DISPOSAL”.

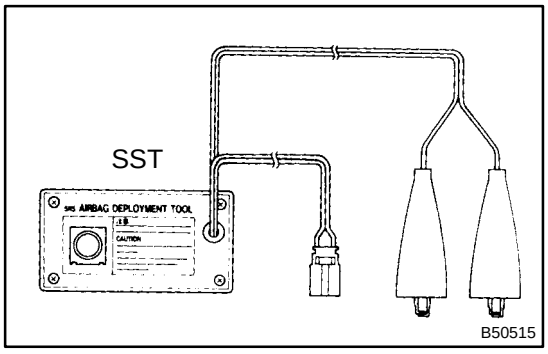

CAUTION:

- **Never dispose of front seat outer belt which has an inactivated pretensioner.**
- **The seat belt pretensioner produces a sizeable exploding sound when it activates, so perform the operation out–of–door and where it will not create a nuisance to nearby residents.**
- **When activating a front seat outer belt (with seat belt pretensioner), perform the operation at least 10 m (33 ft) away from the front seat outer belt.**
- **Use gloves and safety glasses when handling a front seat belt with activated pretensioner.**
- **Always wash your hands with water after completing the operation.**
- **Do not apply water, etc. to a front seat outer belt with activated pretensioner.**
- **When activating the seat belt pretensioner, always use the specified SST. (SRS Airbag Deployment Tool) Perform the operation in a place away from electrical noise.**

  SST 09082–00700

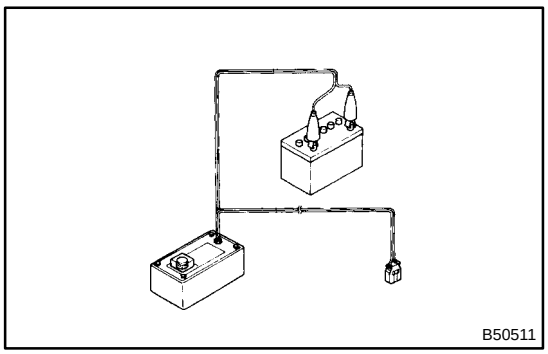

1. DISPOSE FRONT SEAT OUTER BELT ASSY RH(WHEN SCRAPPING VEHICLE DEPLOYMENT METHOD)

HINT:

Check that the battery positive voltage is above 12 V.

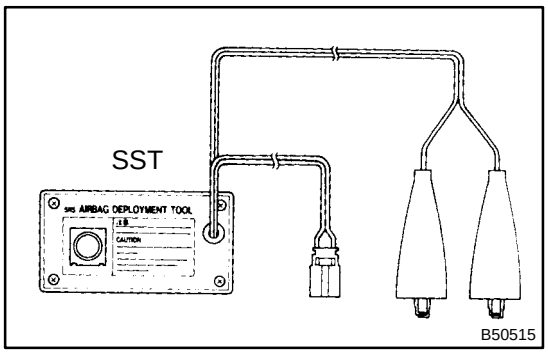

(a) Check functioning of SST.

CAUTION:

When activating the seat belt pretensioner, always use a specified SST.

SST 09082–00700, 09082–00770

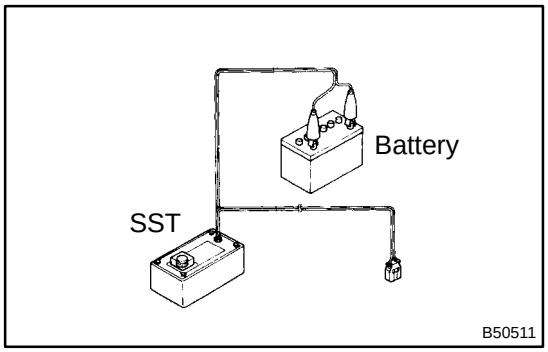

(1) Connect the SST to the battery.
Connect the red clip of the SST to the battery positive (+) terminal and the black clip to the battery negative (–) terminal.

HINT:

Do not connect the yellow connector which will be connected to the seat belt pretensioner.

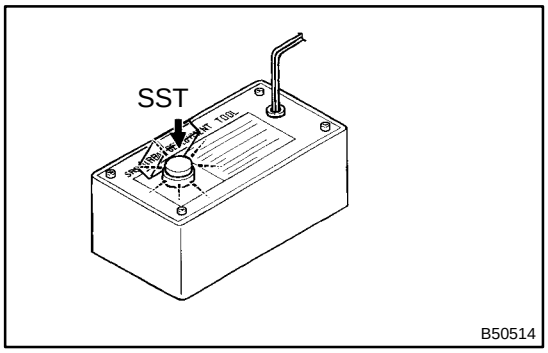

(2) Check functioning of SST.
Press the SST activation switch, and check that the LED of the SST activation switch lights up.

CAUTION:

If the LED lights up when the activation switch is not pressed, the SST probably malfunctions, so definitely do not use the SST.

(b) Disconnect the pretensioner connector.
(1) Remove the front door scuff plate RH (See page 76–20).
(2) Remove the rear door scuff plate RH (See page 76–20).
(3) Remove the front door opening trim weather strip RH (See page 76–20).
(4) Remove the rear door opening trim weather strip RH (See page 76–20).
(5) Remove the center pillar garnish lower RH (See page 76–20).
(6) Remove the center pillar garnish upper RH (See page 76–20).

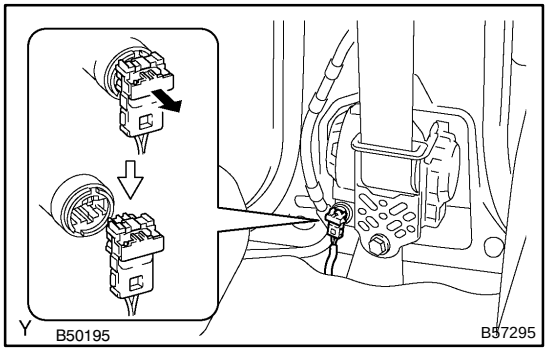

(7) Disconnect the pretensioner connector as shown in the illustration.

(c) Install the SST.
(1) Install the floor anchor of the seat belt.

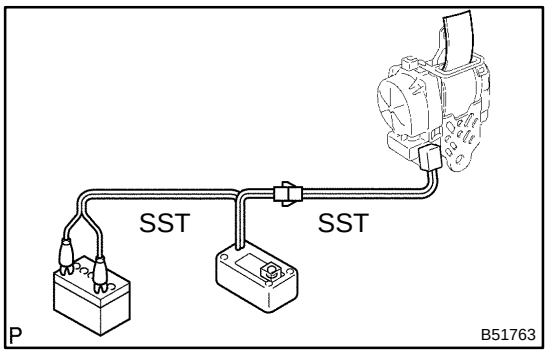

(2) Connect the 2 SSTs, then connect them to the seat belt pretensioner.

SST 09082–00700, 09082–00770

NOTICE:

To avoid damaging the SST connector and wire harness, do not lock the secondary lock of the twin lock.

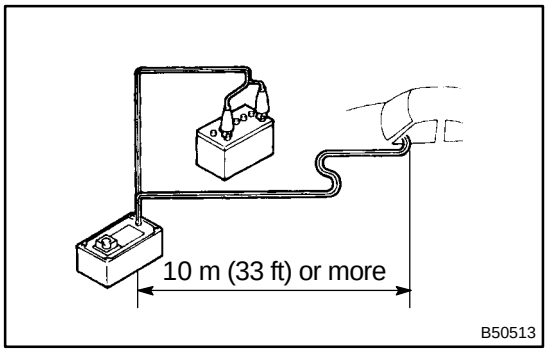

(3) Move the SST at least 10 m (33 ft) away from the front of the vehicle.

(4) Close all the doors and windows of the vehicle.

NOTICE:

Take care not to damage the SST wire harness.

(5) Connect the SST red clip to the battery positive (+) terminal and the black clip to the negative (–) terminal.

(d) Activate the seat belt pretensioner.

(1) Confirm that no one is inside the vehicle or within 10 m (33 ft) area around the vehicle.

(2) Press the SST activation switch and activate the seat belt pretensioner.

HINT:

The seat belt pretensioner operates simultaneously with the LED of the SST activation switch lighting up.

(e) Dispose of the front seat outer belt (with seat belt pretensioner).

CAUTION:

- **The rear outer belt is very hot when the seat belt pretensioner is activated, so leave it alone for at least 30 minutes after activation.**
- **Use gloves and safety glasses when handling a front seat outer belt with activated seat belt pretensioner.**
- **Always wash your hands with water after completing the operation.**
- **Do not apply water, etc. to a front seat outer belt with activated seat belt pretensioner.**

HINT:

When scrapping a vehicle, activate the seat belt pretensioner and scrap the vehicle with activated front seat outer belt being installed.

2. DISPOSE FRONT SEAT OUTER BELT ASSY RH(WHEN DISPOSING OF AIRBAG ASSEMBLY DEPLOYMENT METHOD)

NOTICE:

- **When disposing of a front seat outer belt (with seat belt pretensioner) only, never use the customer's vehicle to activate the seat belt pretensioner.**
- **Be sure to follow the procedure given on the next page when activating the seat belt pretensioner.**

(a) Remove the front seat outer belt (See page 61–7).

HINT:

Cut the belt near the seat belt retractor.

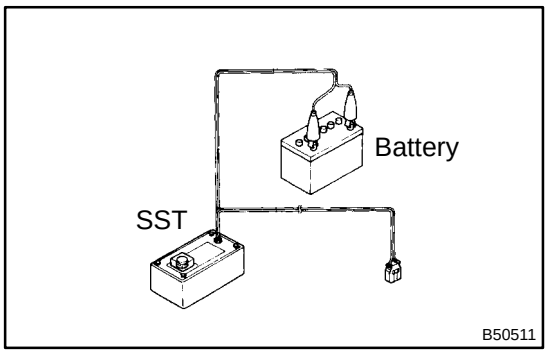

(b) Check functioning of SST (See step 1–(a)).
SST 09082–00700, 09082–00770

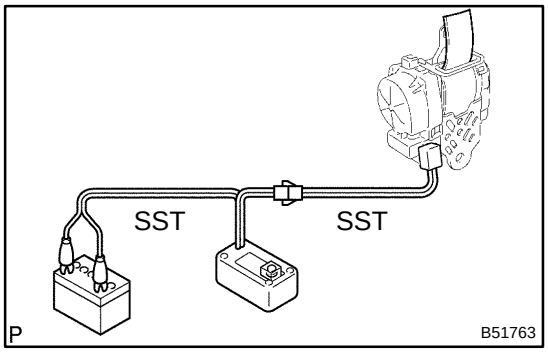

(c) Install the SST.
(1) Connect the 2 SSTs, then connect them to the seat belt pretensioner.
SST 09082–00700, 09082–00770

NOTICE:
To avoid damaging the SST connector and wire harness, do not lock the secondary lock of the twin lock.

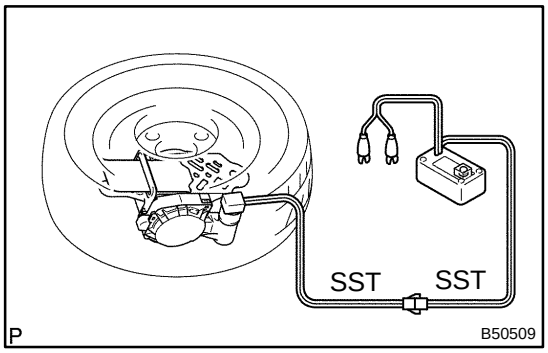

(2) Place the front seat outer belt on the ground and cover it with the disc wheel with tire.

NOTICE:
Place the front seat outer belt as shown in the illustration.

(3) Move the SST at least 10 m (33 ft) away from the disc wheel.

NOTICE:
Take care not to damage the SST wire harness.

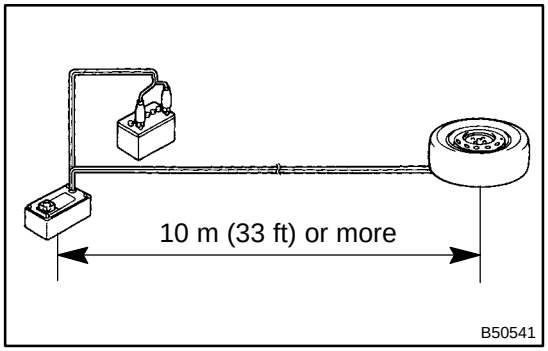

(d) Activate the seat belt pretensioner.
(1) Connect the SST red clip to the battery positive (+) terminal and black clip to the battery negative (–) terminal.
(2) Check that no one is within 10 m (33 ft) area around the disc wheel.
(3) Press the SST activation switch and activate the seat belt pretensioner.

HINT:
The seat belt pretensioner operates simultaneously with the LED of the SST activation switch lighting up.

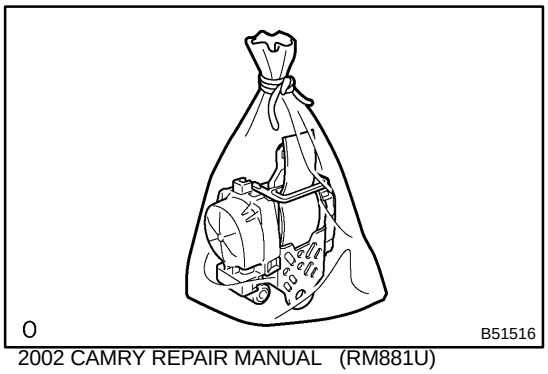

(e) Dispose of the front seat outer belt (with seat belt pretensioner).
(1) Remove the disc wheel and SST.
(2) Place the front seat outer belt in a vinyl bag, tie the end tightly and dispose of it in the same way as other general parts.

REAR SEAT BELT

COMPONENTS

61056–01

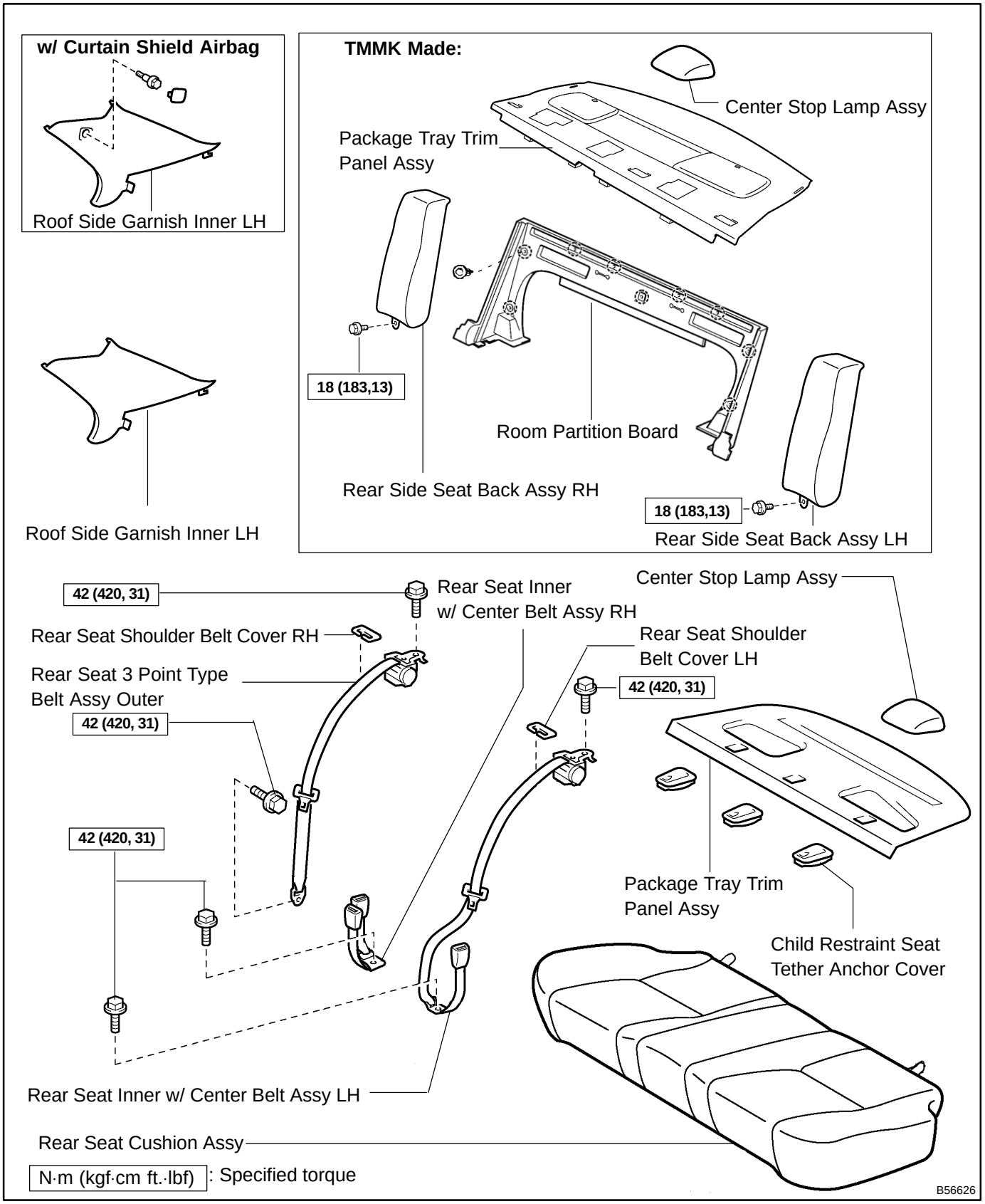

REAR SEAT BELT (TMC MADE)

61057–01

REPLACEMENT

1. **REMOVE REAR SEAT CUSHION ASSY (See page 72–34)**
2. **REMOVE ROOF SIDE GARNISH INNER RH (See page 76–20)**
3. **REMOVE ROOF SIDE GARNISH INNER LH (See page 76–20)**
4. **REMOVE CENTER STOP LAMP ASSY (See page 65–16)**

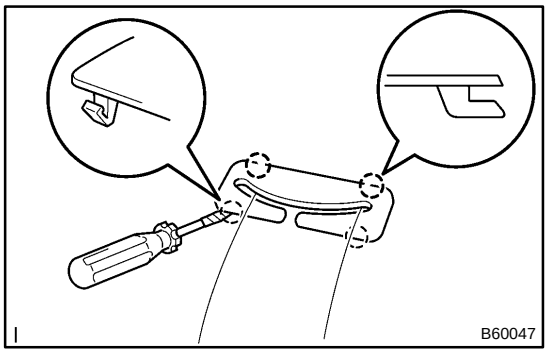

5. REMOVE REAR SEAT SHOULDER BELT COVER RH

(a) Using a screwdriver, disengage the claws in the front side.
HINT:
Tape the screwdriver tip before use.
(b) Pull out the shoulder belt cover to the front side to disengage the claws.
(c) Pull out the shoulder belt from the slit to remove the shoulder belt cover.

6. **REMOVE REAR SIDE SEAT BACK ASSY RH (See page 72–33)**
7. **REMOVE REAR SIDE SEAT BACK ASSY LH (See page 72–33)**

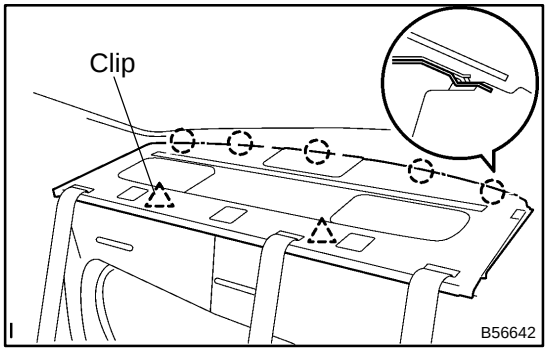

8. REMOVE PACKAGE TRAY TRIM PANEL ASSY

(a) Remove the 3 bolts and the floor anchor of the seat belt.
(b) Disengage the clips and claws and pull out the belt to remove the package tray trim.

9. REMOVE REAR SEAT 3 POINT TYPE BELT ASSY OUTER

(a) Remove the bolt in the retractor, and disengage the claws of the stopper to remove the rear seat belt assembly outer.

10. REMOVE REAR SEAT INNER W/CENTER BELT ASSY RH

(a) Remove the bolt, and disengage the claws of the stopper to remove the rear seat inner with center belt assembly RH.

11. REMOVE REAR SEAT INNER W/CENTER BELT ASSY LH

(a) Remove the bolt in the retractor, and remove the rear seat inner with center belt assembly LH.

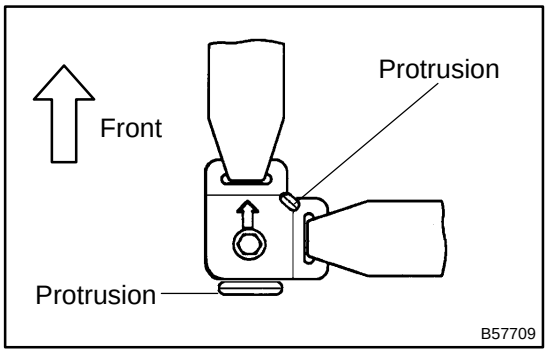

12. INSTALL REAR SEAT INNER W/CENTER BELT ASSY RH

(a) Install the floor anchor with the bolt.
Torque: 42 N·m (420 kgf·cm, 31 ft·lbf)

NOTICE:
Take care for the anchor not to run onto the protrusion part of the floor panel.

13. INSTALL REAR SEAT 3 POINT TYPE BELT ASSY OUTER

(a) Install the retractor with the bolt.
Torque: 42 N·m (420 kgf·cm, 31 ft·lbf)

(b) Install the anchor of the rear seat 3 point type belt assembly outer RH with the bolt.
Torque: 42 N·m (420 kgf·cm, 31 ft·lbf)

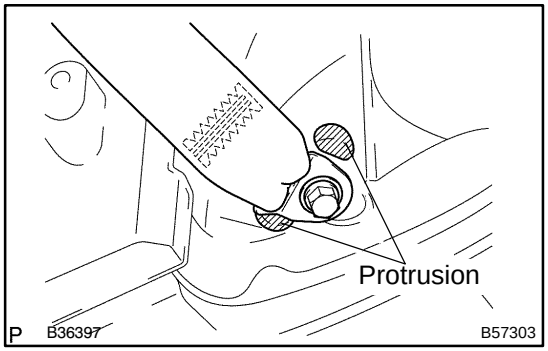

NOTICE:
Take care for the anchor not to run onto the protrusion part of the floor panel.

(c) Check the degree of tilt when the belt begins to lock the ELR.
  (1) Check the degree in the same way as the rear seat inner with center belt assembly RH.

(d) Check the ELR lock.
  (1) Check that the belt will lock when pulling out the belt quickly with the belt installed.

(e) Check the fastening function for child restraint system.
  (1) Check the function in the same way as the rear seat inner with center belt assembly RH.

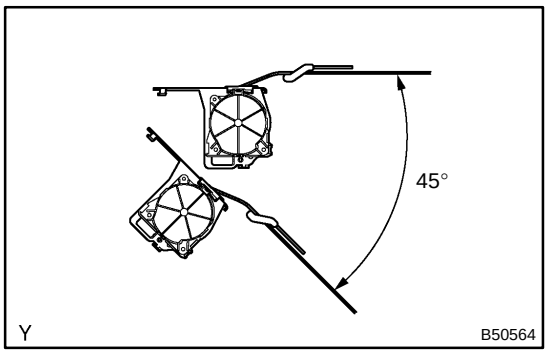

14. INSTALL REAR SEAT INNER W/CENTER BELT ASSY LH

(a) Check the degree of tilt when the belt begins to lock the ELR.
  (1) Check the belt will not lock within 15 degrees of tilt in all the direction but the belt will lock over 45 degrees of tilt when moving the installed retractor gently.

(b) Install the retractor with the bolt.
Torque: 42 N·m (420 kgf·cm, 31 ft·lbf)

(c) Check the ELR lock.
  (1) Check that the belt will lock when pulling out the belt quickly with the belt installed.

(d) Check the fastening function for child restraint system.

NOTICE:

Check should be done with the assembly installed.
  (1) Check that the belt cannot be pulled out any more but can be rewound after the belt is fully pulled out.
  (2) Check that the belt can be pulled out and rewound after the belt is fully rewound.

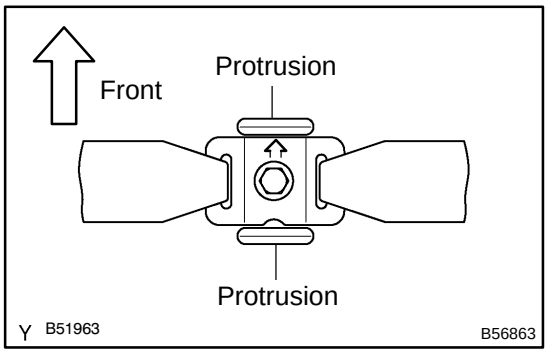

(e) Install the floor anchor with the bolt, directing an arrow mark on the plate to the vehicle's front direction.
Torque: 42 N·m (420 kgf·cm, 31 ft·lbf)

NOTICE:

Take care for the anchor not to run onto the protrusion part of the floor panel.

(f) Check the ELR lock.
  (1) Check that the belt will lock when pulling out the belt quickly with the belt installed.

REAR SEAT BELT (TMMK MADE)

61058–01

REPLACEMENT

1. **REMOVE REAR SEAT CUSHION ASSY (See page 72–38)**
2. **REMOVE ROOF SIDE GARNISH INNER RH (See page 76–20)**
3. **REMOVE ROOF SIDE GARNISH INNER LH (See page 76–20)**
4. **REMOVE CENTER STOP LAMP ASSY (See page 65–16)**

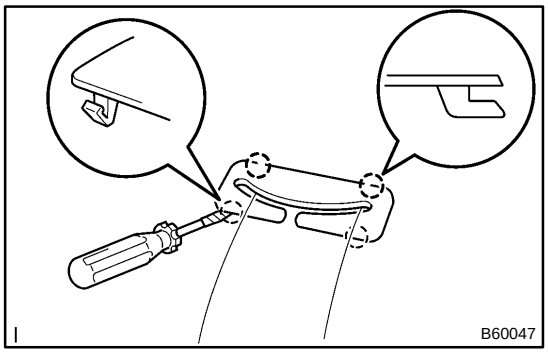

5. REMOVE REAR SEAT SHOULDER BELT COVER RH

(a) Using a screwdriver, disengage the claws in the front side.
HINT:
Tape the screwdriver tip before use.
(b) Pull out the shoulder belt cover to the front side to disengage the claws.
(c) Pull out the shoulder belt from the slit to remove the shoulder belt cover.

6. **REMOVE REAR SIDE SEAT BACK ASSY RH (See page 72–38)**
7. **REMOVE REAR SIDE SEAT BACK ASSY LH (See page 72–38)**

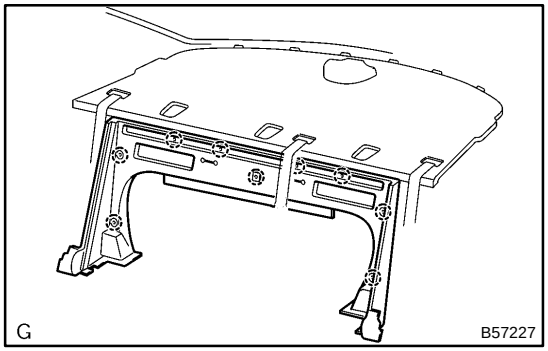

8. REMOVE ROOM PARTITION BOARD ASSY

(a) Remove the 9 clips and room partition board.

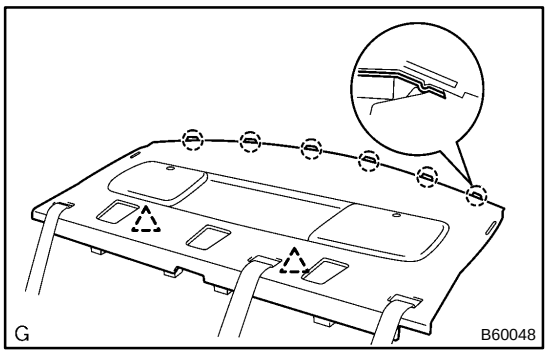

9. REMOVE PACKAGE TRAY TRIM PANEL ASSY

(a) Remove the 3 bolts and the floor anchor of the seat belt.
(b) Disengage the clips and claws and pull out the belt to remove the package tray trim.

10. REMOVE REAR SEAT 3 POINT TYPE BELT ASSY OUTER

(a) Remove the bolt in the retractor, and disengage the claws of the stopper to remove the rear seat belt assembly outer.

11. REMOVE REAR SEAT INNER W/CENTER BELT ASSY RH

(a) Remove the bolt, and disengage the claws of the stopper to remove the rear seat inner with center belt assembly RH.

12. REMOVE REAR SEAT INNER W/CENTER BELT ASSY LH

(a) Remove the bolt in the retractor, and remove the rear seat inner with center belt assembly LH.

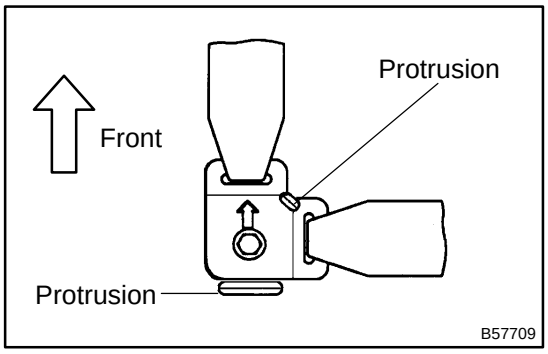

13. INSTALL REAR SEAT INNER W/CENTER BELT ASSY RH

(a) Install the floor anchor with the bolt.
Torque: 42 N·m (420 kgf·cm, 31 ft·lbf)

NOTICE:
Take care for the anchor not to run onto the protrusion part of the floor panel.

14. INSTALL REAR SEAT 3 POINT TYPE BELT ASSY OUTER

(a) Install the retractor with the bolt.
Torque: 42 N·m (420 kgf·cm, 31 ft·lbf)

(b) Install the anchor of the rear seat 3 point type belt assembly outer RH with the bolt.
Torque: 42 N·m (420 kgf·cm, 31 ft·lbf)

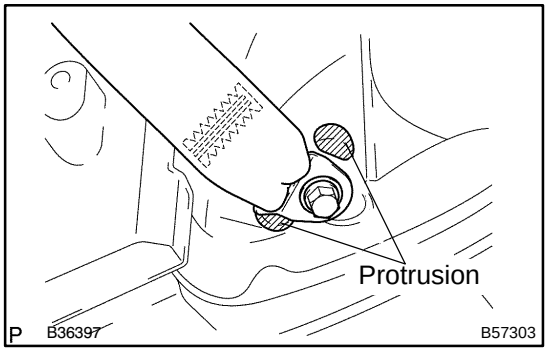

NOTICE:
Take care for the anchor not to run onto the protrusion part of the floor panel.

(c) Check the degree of tilt when the belt begins to lock the ELR.
  (1) Check in the same way as the rear seat inner with center belt assembly RH.

(d) Check the ELR lock.
  (1) Check the degree that the belt will lock when pulling out the belt quickly with the belt installed.

(e) Check the fastening function for child restraint system.
  (1) Check the function in the same way as the rear seat inner with center belt assembly RH.

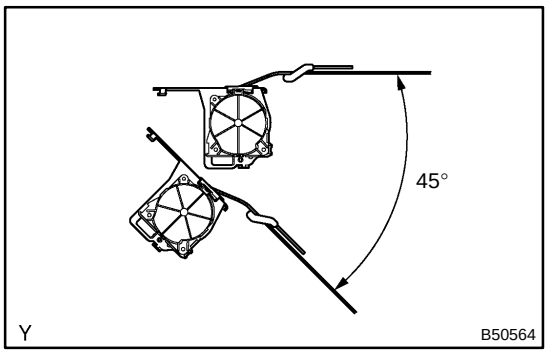

15. INSTALL REAR SEAT INNER W/CENTER BELT ASSY LH

(a) Check the degree of tilt when the belt begins to lock the ELR.
  (1) Check the belt will not lock within 15 degrees of tilt in all the direction but the belt will lock over 45 degrees of tilt when moving the installed retractor gently.

(b) Install the retractor with the bolt.
Torque: 42 N·m (420 kgf·cm, 31 ft·lbf)

(c) Check the ELR lock.
  (1) Check that the belt will lock when pulling out the belt quickly with the belt installed.

(d) Check the fastening function for child restraint system.

NOTICE:

Check should be done with the assembly installed.
  (1) Check that the belt cannot be pulled out any more but can be rewound after the belt is fully pulled out.
  (2) Check that the belt can be pulled out and rewound after the belt is fully rewound.

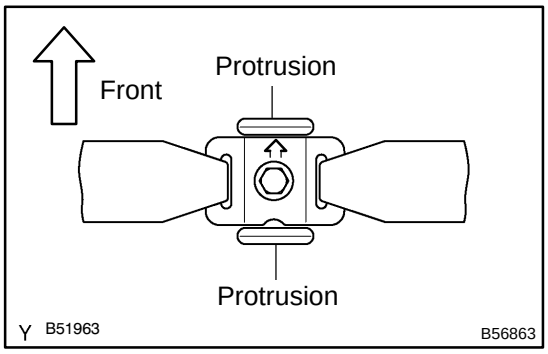

(e) Install the floor anchor with the bolt, directing an arrow mark on the plate to the vehicle's front direction.
Torque: 42 N·m (420 kgf·cm, 31 ft·lbf)

NOTICE:

Take care for the anchor not to run onto the protrusion part of the floor panel.

(f) Check the ELR lock.
  (1) Check that the belt will lock when pulling out the belt quickly with the belt installed.

LIGHTING SYSTEM

650BI–01

PRECAUTION

1. PRECAUTION OF HEADLIGHT BULB REPLACEMENT

(a) If the adhered oil is left unremoved from the halogen lamp surface, the lamp service life is shortened as it becomes hot when it is turned on.

(b) Since the internal pressure of a halogen lamp is high, dropping, hitting or damaging the bulb may cause the glass to scatter. Therefore, handle it with great care.

(c) When replacing bulbs, do not remove until a new bulb is prepared.
Because if it is left being removed for a long period of time, the lens may be covered with dirt or moisture.

(d) For replacement, be sure to use a bulb of the same watt.

(e) Firmly reinstall the socket after bulb replacement. Otherwise, cloudy lens or invasion by water will be caused.

650BJ–01

ON–VEHICLE INSPECTION

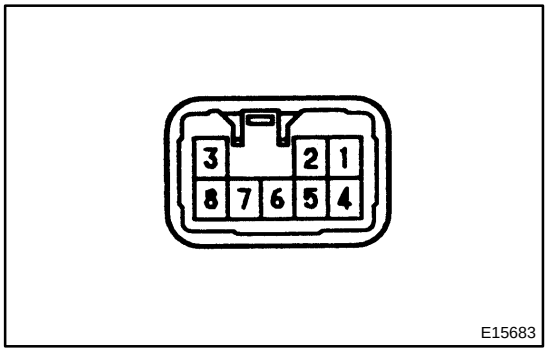

1. INSPECT TURN SIGNAL FLASHER CIRCUIT

(a) Measure voltage between terminal as shown in the chart below.

Tester connection	Condition	Specified condition
7 – Ground	Constant	Continuity
1 – Ground	Turn igniton switch ON	Battery positive voltage
1 – Ground	Turn igniton switch OFF	No voltage
4 – Ground	Constant	Battery positive voltage

(b) Connect the connector to turn signal flasher and inspect the wire harness side connector from the back side as shown in the chart below.

Tester connection	Condition	Specified condition
2 – Ground	Hazard switch OFF → ON	0V → 10 – 14 V (60 to 120 time per minutes)
2 – Ground	Turn signal switch (right turn) OFF → ON	0V → 10 – 14 V (60 to 120 time per minutes)
3 – Ground	Hazard switch OFF → ON	0V → 10 – 14 V (60 to 120 time per minutes)
3 – Ground	Turn signal switch (left turn) OFF → ON	0V → 10 – 14 V (60 to 120 time per minutes)
5 – Ground	Turn signal switch (left turn) OFF → ON	10 – 14 V → 0 V
6 – Ground	Turn signal switch (right turn) OFF → ON	10 – 14 V → 0 V
8 – Ground	Hazard switch OFF → ON	10 – 14 V → 0 V

INSPECTION

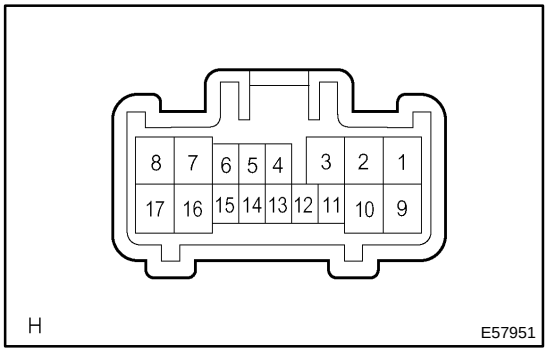

1. HEADLAMP DIMMER SWITCH ASSY

(a) Inspect light control switch continuity.

(1) Check that there is continuity between terminals at each switch position as shown in the chart.

Switch operation	Tester connection	Specified condition
OFF	–	No continuity
TAIL	14 – 16	Continuity
HEAD	13 – 16 – 14	Continuity

(b) Inspect headlamp dimmer switch continuity.

(1) Check that there is continuity between terminals at each switch position as shown in the chart.

Switch operation	Tester connection	Specified condition
FLASH	7 –8 – 16	Continuity
LOW BEAM	16 – 17	Continuity
HI BEAM	7 – 16	Continuity

(c) Inspect turn signal switch continuity.

(1) Check that there is continuity between terminals at each switch position as shown in the chart.

Switch operation	Tester connection	Specified condition
Right turn	2 – 3	Continuity
Neutral	–	No continuity
Left turn	1 – 2	Continuity

(d) Inspect front fog light switch continuity.

(1) Check that there is continuity between terminals at each switch position as shown in the chart.

Switch operation	Tester connection	Specified condition
OFF	–	No continuity
ON	10 – 11	Continuity

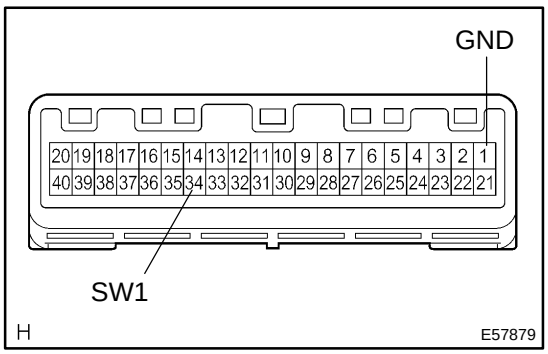

2. HEATER CONTROL HOUSING SUB–ASSY

(a) Auto A/C:

Inspect hazard warning signal switch.

Switch operation	Tester connection	Specified condition
OFF	1 – 34	No continuity
ON	1 – 34	Continuity

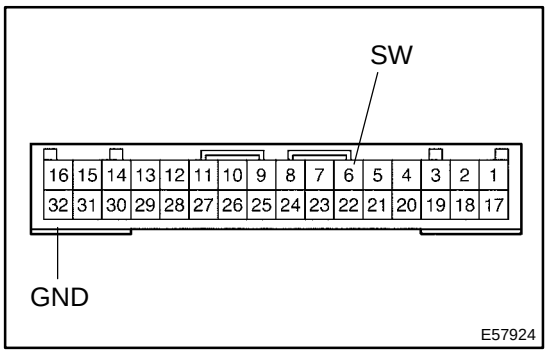

(b) Manual A/C:
Inspect hazard warning signal switch.

Switch operation	Tester connection	Specified condition
OFF	6 – 32	No continuity
ON	6 – 32	Continuity

3. BACK UP LAMP SWITCH ASSY

(a) Inspect back–up lamp switch continuity.
(1) Check that there is continuity between terminals upon switch operation.
Standard:
OFF (When ball is not pressed): No continuity
ON (When ball is pressed): Continuity

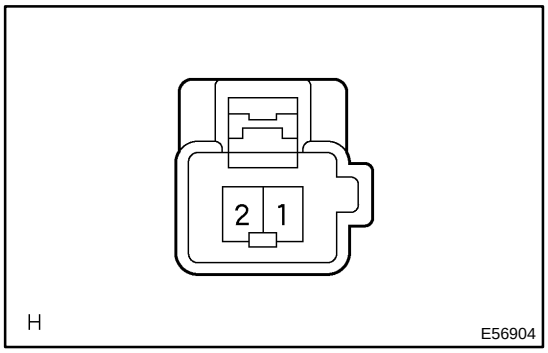

4. LUGGAGE COMPARTMENT DOOR LOCK ASSY

(a) Inspect luggage compartment door courtesy lamp switch continuity.
(1) Check that there is continuity between terminal 2 and body ground when switch is operated.
Standard:
ON (When shaft is pressed): No continuity
OFF (When shaft is not pressed): Continuity

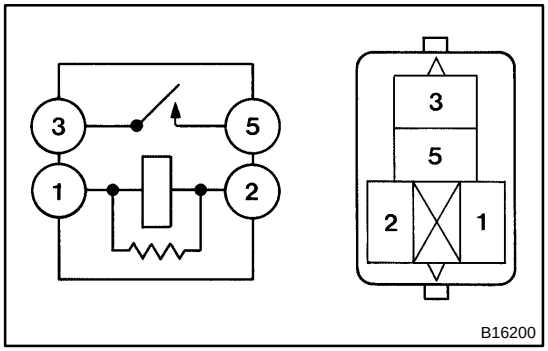

5. FOG LAMP RELAY

(a) Inspect relay continuity.

Condition	Tester connection	Specified condition
Constant	1 – 2	Continuity
Apply B+ between terminals 1 and 2.	3 – 5	Continuity

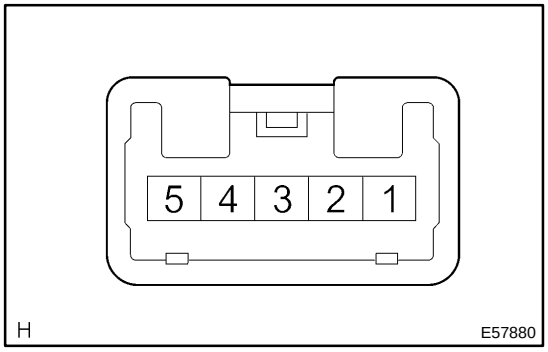

6. ROOF CONSOLE BOX ASSY

(a) Inspect map lamp continuity.
(1) Check that there is continuity between terminal 1 and 5 when switch is operated.
Standard:
ON: Continuity
OFF: No continuity

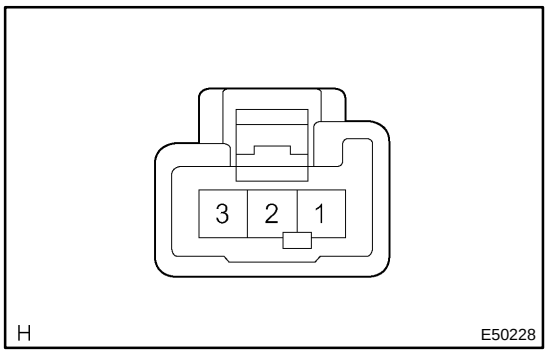

7. ROOM LAMP ASSY NO.1

(a) Inspect room lamp assy No. 1 continuity.
(1) Check that there is continuity between terminals at each switch position as shown in the chart.

Standard:

Switch operation	Tester connection	Specified condition
OFF	–	No continuity
DOOR	1 – 2	Continuity
*1 ON	2 – 3	Continuity
*2 ON	1 – 3	Continuity

*1: TMMK Made
*2: TMC Made

8. GLOVE BOX LAMP ASSY

(a) Inspect glove box lamp assy continuity.
(1) Check that there is continuity between terminals when switch is operated.
Standard:
ON (When shaft is pressed): No continuity
OFF (When shaft is not pressed): Continuity

9. LUGGAGE COMPARTMENT LAMP ASSY NO.1

(a) Inspect luggage compartment lamp assy No. 1.
(b) Check that there is continuity between terminals when switch is operated.
Standard:
ON: Continuity
OFF No continuity

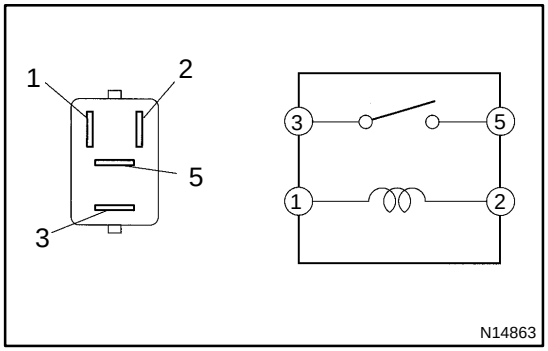

10. TAIL LAMP RELAY

(a) Inspect relay continuity.

Condition	Tester connection	Specified condition
Constant	1 – 2	Continuity
Apply B+ between terminal 1 and 2	3 – 5	Continuity

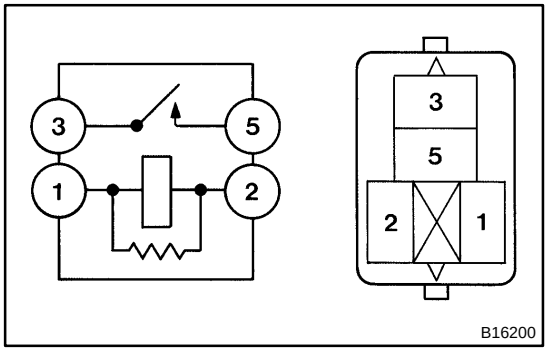

11. DAY TIME RUNNING LIGHT RELAY NO.2

(a) Inspect relay continuity.

Condition	Tester connection	Specified condition
Constant	1 – 2	Continuity
Apply B+ between terminal 1 and 2	3 – 5	Continuity

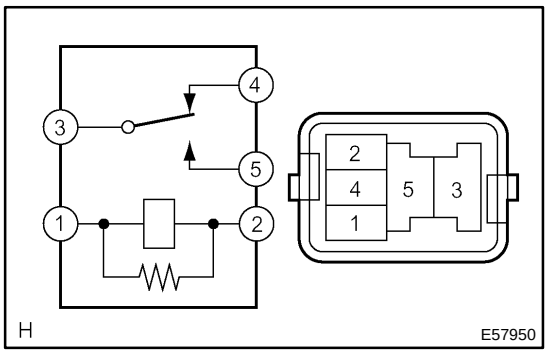

12. RUNNING LIGHT RELAY

(a) Inspect relay continuity.

Condition	Tester connection	Specified condition
Constant	1 – 3, 2 – 4	Continuity
Apply B+ between terminal 1 and 3	4 – 5	Continuity

LH HEADLAMP ASSY

650BN–01

COMPONENTS

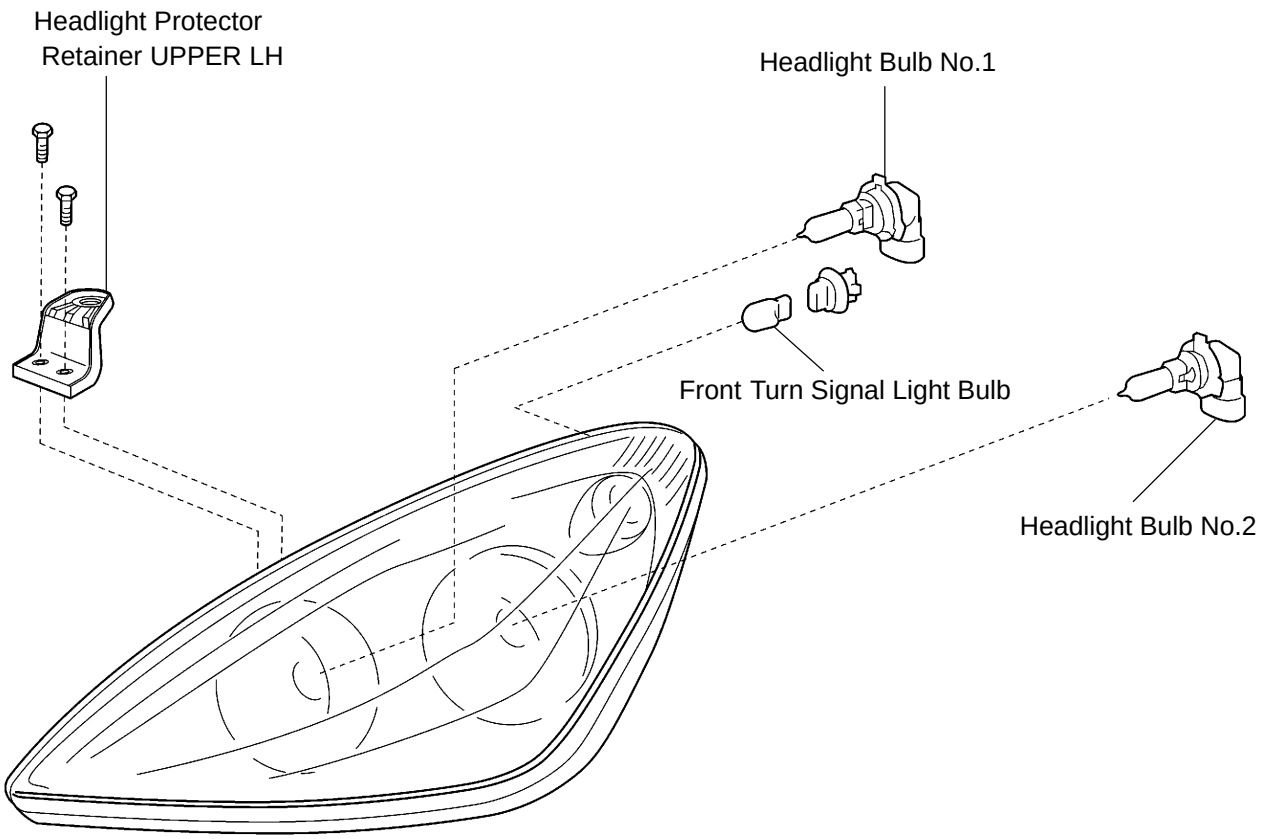

E58521

650BL–01

REPLACEMENT

HINT:

COMPONENTS: See Page 65–7

1. **REMOVE ENGINE UNDER COVER LH (See Page 76–2)**
2. **REMOVE ENGINE UNDER COVER RH (See Page 76–2)**
3. **REMOVE FRONT FENDER LINER RH (See Page 76–2)**
4. **REMOVE FRONT FENDER LINER LH (See Page 76–2)**
5. **REMOVE FRONT BUMPER COVER (See Page 76–2)**

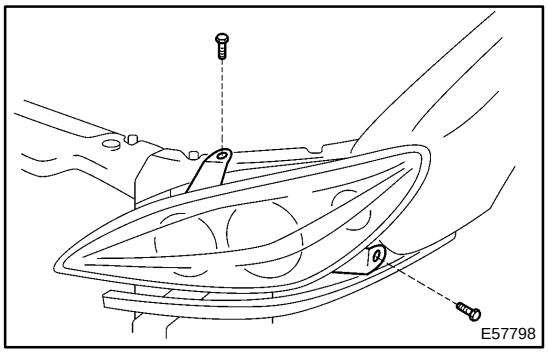

6. REMOVE LH HEADLAMP ASSY

(a) Remove the 2 bolts.
(b) Disconnect the connectors.

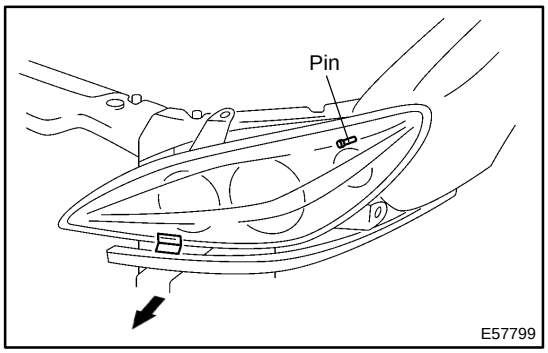

(c) Pull out the headlight unit forward.
(d) Remove the headlight assy.

7. REMOVE HEADLAMP PROTECTOR RETAINER UPPER LH

HINT:
When only the installation part of the headlight unit assy LH is damaged, it can be repaired inexpensively by using a headlight protector retainer UPPER LH. In this case, however, the headlight unit assy LH itself should not be damaged.

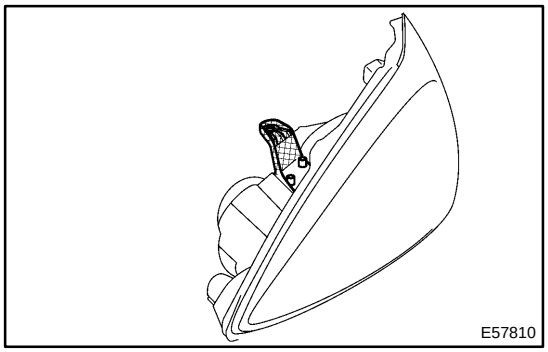

(a) Cut off the part shaded in the illustration and sand smooth with sandpaper.

NOTICE:
After cutting off the part roughly, place the headlight protector retainer UPPER LH against the bosses and gradually file any interfering part until the proper condition for installation is made.

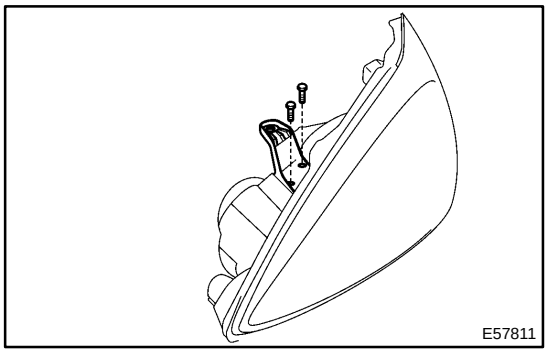

(b) Install the headlight protector retainer UPPER LH with the 2 screws.

8. HEADLIGHT AIM ONLY(See Page 65–10)

650BM–01

ADJUSTMENT

1. HEADLIGHT AIM ONLY

(a) Place the vehicle with the following conditions.
- The area around the headlight is not deformed.
- The vehicle is parked on a level surface.
- Tire inflation pressure is in the specified value.
- A driver is in the driver's seat and the vehicle is in a state ready for driving (with a tank full).
- The vehicle has been bounced several times.

(b) Check the headlight aiming.
(1) Prepare a thick white paper.
(2) Stand the paper perpendicular to the ground at the position 9.84 ft away from the headlights.
(3) Ensure that the center line of the vehicle and the paper face forms a 90–degree angle as shown in the illustration.
(4) Draw a horizontal line (H line) on the paper, showing where the headlights should strike.
(5) Draw a vertical line (V line) to where the center line of the vehicle is to be.
(6) Draw 2 vertical lines to where the both headlights should strike (V RH and V LH lines).
(7) Draw a horizontal line (by connecting the both low beam center marks) to where the headlights should strike (H RH and H LH lines).
(8) Take appropriate measures to prevent any influence of other lights.

HINT:

The H RH and H LH line is 0.4° below the horizontal line (H line) of the light axis.

(9) Start the engine.
(10) Turn the headlights ON.
(11) Check that the headlights properly strike the position shown in the illustration.
(12) If not, adjust the lights in the vertical direction.

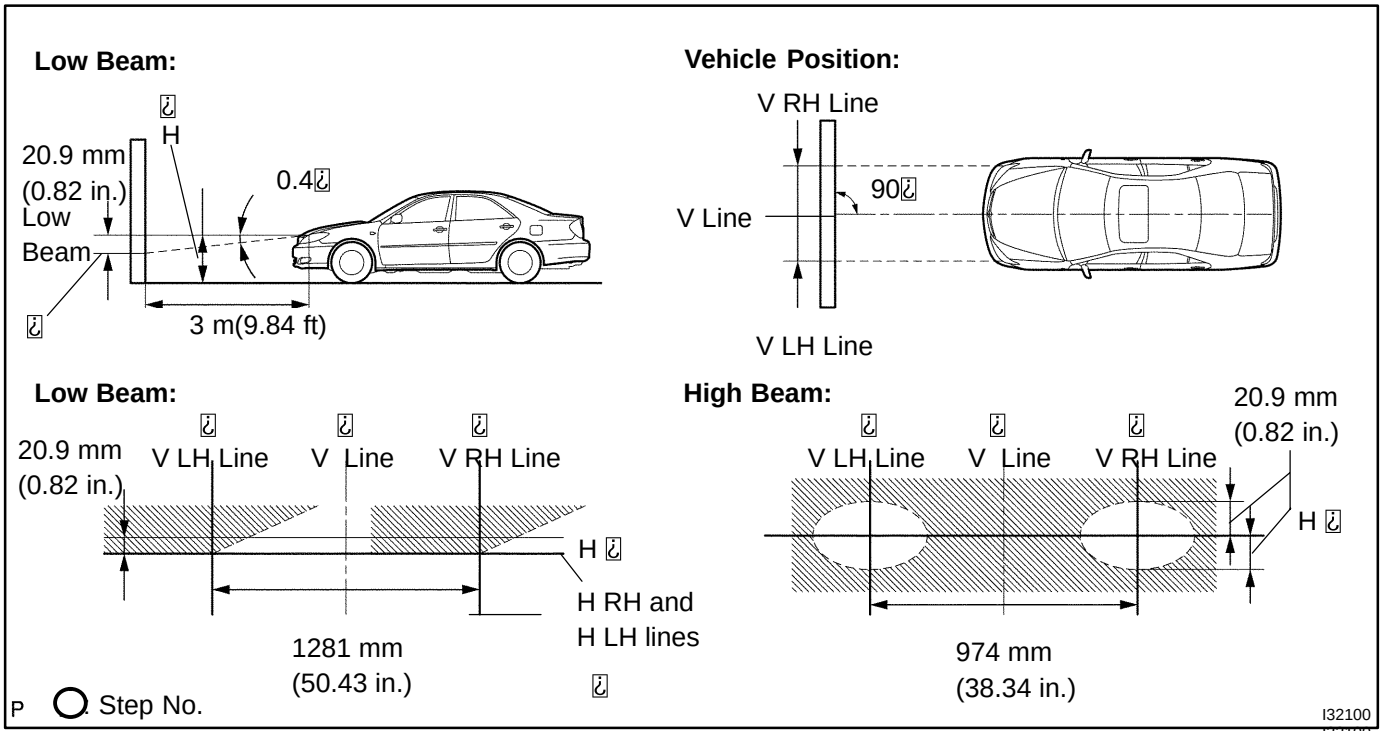

HINT:
- As shown in the illustration, adjust each aim of the RH and LH lights.
- Since it is impossible to adjust the horizontal direction, the value of the "Low Beam" aim is reference value.

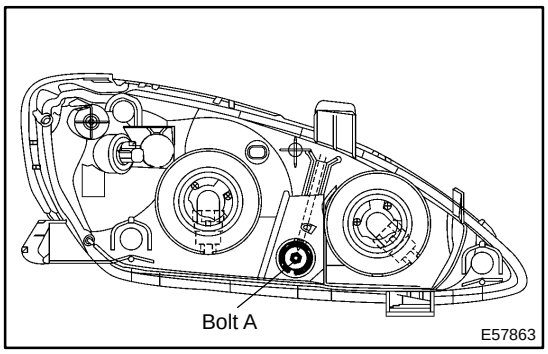

(c) When adjusting it in the vertical direction:
  (1) High Beam:
  Using adjusting bolt A, adjust the headlight aim to be within the specified range.
  (2) Low Beam:
  Using adjusting bolt A, adjust the headlight aim to be within the specified range.

HINT:

The optical aim moves upward when turning a screwdriver clockwise, while it moves downward when turning a screwdriver counterclockwise.

FOG LAMP ASSY LH

650BO–01

REPLACEMENT

1. REMOVE ENGINE UNDER COVER LH
(See Page76–2)

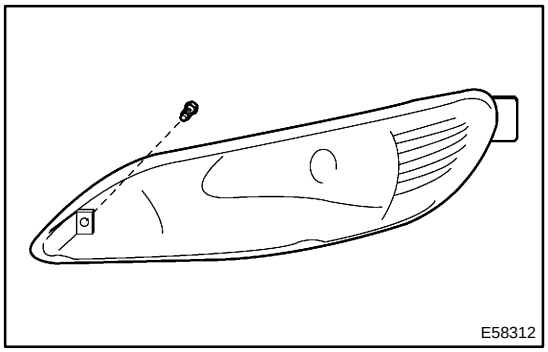

2. REMOVE FOG LAMP ASSY LH

(a) Detach clip and pull out the fog light assy LH forward.

650BP–01

ADJUSTMENT

1. PUT VEHICLE THESE CONDITIONS

(a) Tire inflation pressure is in the specified value.

(b) Start the engine.

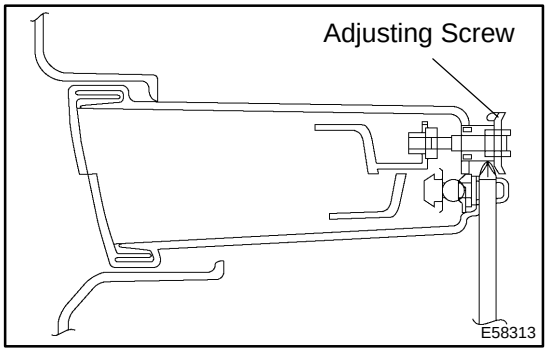

2. ADJUST FOG LIGHT AIM

(a) The fog light aim can be adjusted by turning the aiming screw in the vertical direction.

HINT:

The optical aim moves upward when turning a screwdriver clockwise, while it moves downward when turning a screwdriver counterclockwise.

REAR COMBINATION LAMP ASSY LH

650BQ–01

REPLACEMENT

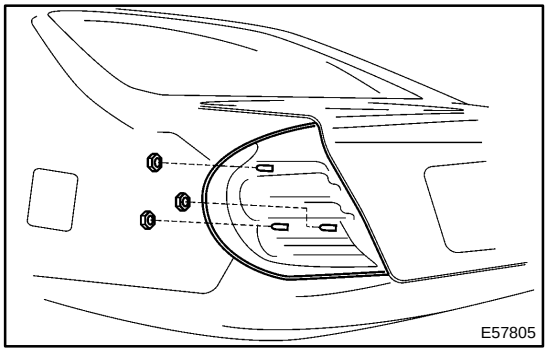

1. REMOVE REAR COMBINATION LAMP ASSY LH

(a) Remove the service hole cover.
(b) Remove the 3 nuts and disconnect the connector of rear combination light.
(c) Pull the rear combination light assy to the back of the vehicle, and remove the rear combination light assy.

LICENSE PLATE LAMP ASSY

650BR–01

REPLACEMENT

1. **REMOVE LUGGAGE COMPARTMENT DOOR COVER**
   (See Page 76–16)
2. **REMOVE LUGGAGE COMPARTMENT DOOR GARNISH SUB–ASSY OUTSIDE**
   (See Page 76–16)

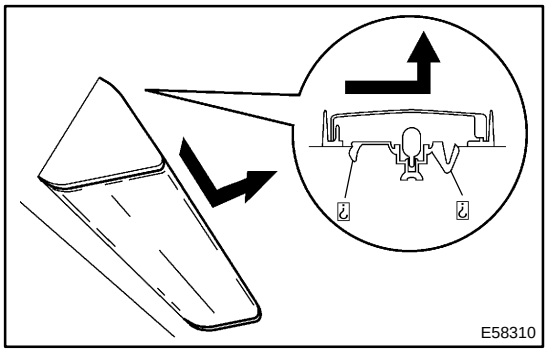

3. **REMOVE LICENSE PLATE LAMP ASSY**

(a) Pull the license plate light assy to the side of vehicle as shown in the illustration and release the claw, then disconnect the connector.

CENTER STOP LAMP ASSY

REPLACEMENT

650BS–01

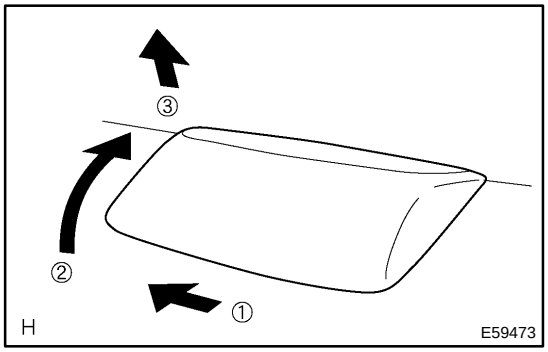

1. REMOVE CENTER STOP LAMP ASSY(W/O REAR SPOILER LED)

(a) Pull out the center stop light assy shown in the illustration.
(b) Disconnect connector.

2. REMOVE LUGGAGE COMPARTMENT DOOR COVER(W/ REAR SPOILER LED)
(See Page 76–6)

3. REMOVE REAR SPOILER SUB–ASSY(W/ REAR SPOILER LED)
(See Page 76–6)

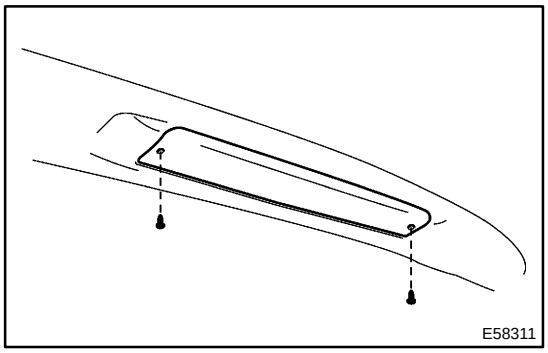

4. REMOVE CENTER STOP LAMP ASSY(W/ REAR SPOILER LED)

(a) Remove the 2 screws and center stop light assy.

5. INSTALL REAR SPOILER SUB–ASSY(W/ REAR SPOILER LED)
(See Page 76–6)

HEADLAMP DIMMER SWITCH ASSY

650BT–01

REPLACEMENT

1. REMOVE STEERING COLUMN COVER
(See Page 50–9)

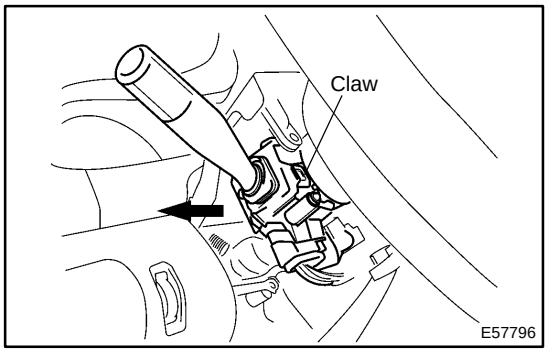

2. REMOVE HEADLAMP DIMMER SWITCH ASSY

(a) Disconnect the connector.
(b) Using a screwdriver, release the claw and pull out the headlight dimmer switch assy.

NOTICE:
Pressing the claw hard breaks the claw.
HINT:
Tape the screwdriver tip before use.

WIPER AND WASHER SYSTEM

6604P–01

PRECAUTION

1. PRECAUTION OF WASHER NOZZLE ADJUSTMENT

(a) Do not clean or adjust the washer nozzle with a safety pin etc. because;
  (1) the washer nozzle tip is made of resin and could be damaged.
  (2) adjustment is not necessary because the washer nozzle is spray type.

(b) In case the washer nozzle is clogged with wax etc., remove the objects and clean the nozzle hole with a soft resin brush etc.

6604Q–01

PROBLEM SYMPTOMS TABLE

1. WIPER AND WASHER SYSTEM

Symptom	Suspect Area	See page
Front wipers do not operate.	1. IG1 Relay 2. WIPER Fuse 3. Front Wiper Switch 4. Wire Harness	– – 66–4 –
Front wipers do not operate in LO or HI.	1. Front Wiper Switch 2. Front Wiper Motor 3. Wire Harness	66–4 66–4 –
Front wipers do not operate in INT.	1. Front Wiper Switch 2. Front Wiper Motor 3. Wire Harness	66–4 66–4 –
Front Washer motor does not operate.	1. WIPER Fuse 2. Front Washer Switch 3. Front Washer Motor 4. Wire Harness	– 66–4 65–2 –
Front Wipers do not operate when washer switch in ON.	1. Front Wiper Switch 2. Front Wiper Motor 3. Wire Harness	66–4 66–4 –
Washer fluid does not operate.	1. Washer Hose and Nozzle	–
° When the wiper switch is OFF, the wiper blade does not retract or the retract position is wrong. ° The wiper blade is in contact with the body.	1. Wiper Motor (wiper arm and blade set position)	66–6

6604R–01

ON–VEHICLE INSPECTION

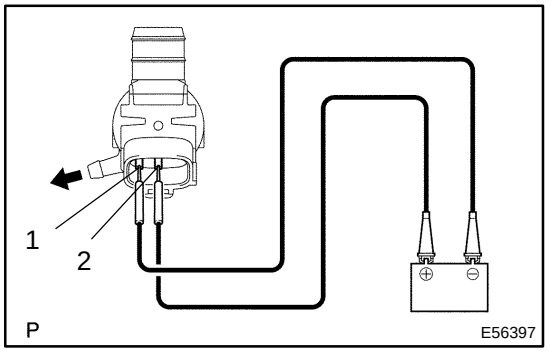

1. WASHER MOTOR

(a) Operation Check

(1) Pour the water into the washer jar with the washer motor and the pump installed to the washer jar assy.

(2) Connect the battery (+) to terminal 2 of the washer motor and the pump, the battery (–) to terminal 1 of the washer motor and the pump. Check that the water comes out from the washer jar.

6604S–01

INSPECTION

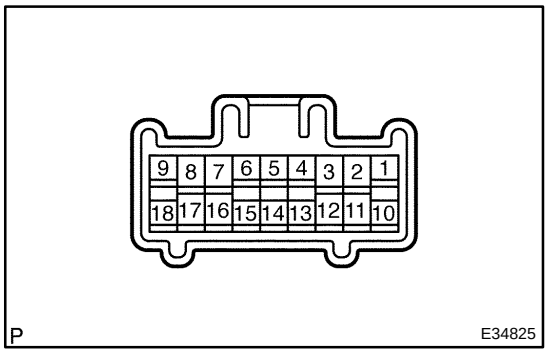

1. WINDSHIELD WIPER SWITCH ASSY

(a) Continuity Check

(1) Check the continuity of each terminal of the connector.

Standard:

Front Wiper Switch

Switch position	Tester connection	Specified condition
MIST	7 (+1) – 17 (+B)	Continuity
OFF	16 (+S) – 7 (+1)	Continuity
INT	16 (+S) – 7 (+1)	Continuity
LO	7 (+1) – 17 (+B)	Continuity
HI	17 (+B) – 8 (+2)	Continuity

Front Washer Switch

Switch position	Tester connection	Specified condition
OFF	–	No continuity
ON	11 (WF) – 2 (EW)	Continuity

(b) Intermittent Operation Check

(1) Connect the voltmeter (+) terminal to terminal 7 (+1) of the connector, the voltmeter (–) terminal to terminal 2 (EW) of the connector.

(2) Connect the battery (+) to terminal 17 (+B) of the connector, the battery (–) to terminal 2 (EW) and 16 (+S) of the connector.

(3) Turn the wiper switch to INT.

(4) Connect the battery (+) to terminal 16 (+S) of the connector for 5 seconds.

(5) Connect the battery (–) to terminal 16 (+S) of the connector. Operate the intermittent wiper relay and check voltage between terminal 7 (+1) and terminal 2 (EW).

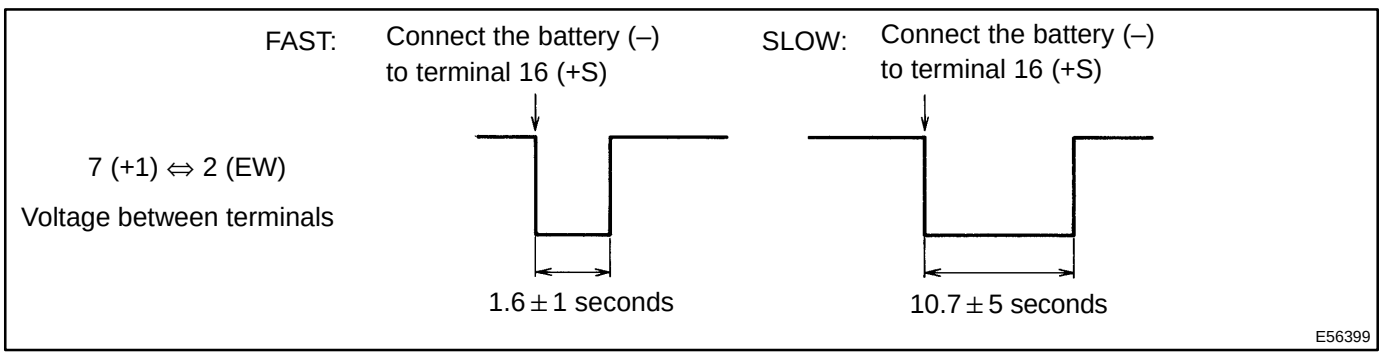

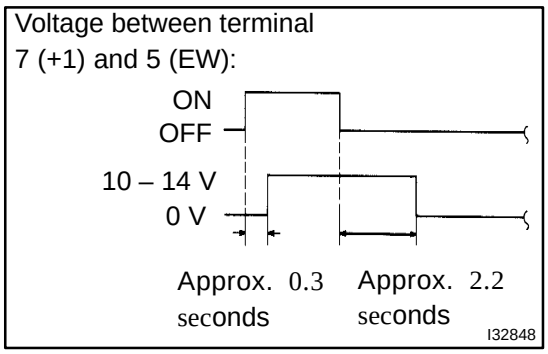

(c) Operation Check (Front Wiper)
(1) Turn the wiper switch to OFF.
(2) Connect the battery (+) to terminal 17 (+B) of the connector, the battery (–) to terminal 16 (+S) and 2 (EW) of the connecter.
(3) Connect the voltmeter (+) terminal to terminal 7 (+1) of the connector, and the voltmeter (–) terminal to terminal 2 (EW) of the connector. Turn the washer switch to ON and OFF, and check voltage between terminal 7 (+1) and terminal 2 (EW).

2. WINDSHIELD WIPER MOTOR ASSY

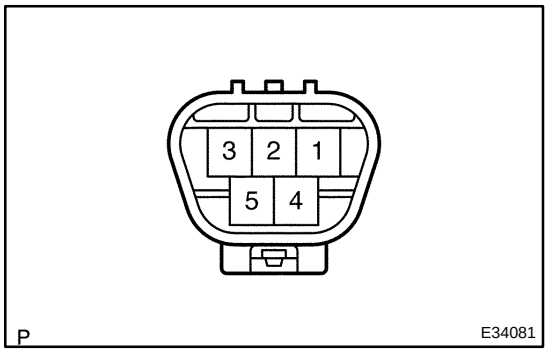

(a) LO Operation Check
(1) Connect the battery (+) to terminal 1 (+1) of the connector, the battery (–) to terminal 5 (E) of the connector, and check that the motor operates at low speed (LO).
(b) HI Operation Check
(1) Connect the battery (+) to terminal 4 (+2) of the connector, the battery (–) to terminal 5 (E) of the connector, and check that the motor operates at high speed (HI).
(c) Automatic Stop Operation Check
(1) Connect the battery (+) to terminal 1 (+1) of the connector, the battery (–) to terminal 5 (E) of the connector. With the motor being rotated at low speed (LO), disconnect terminal 1 (+1) to stop the wiper motor operation at any position except the automatic stop position.
(2) Connect terminals 1 (+1) and 3 (S), and the battery (+) to terminal 2 (B) to restart the motor operation at low speed.
SST 09843–18040

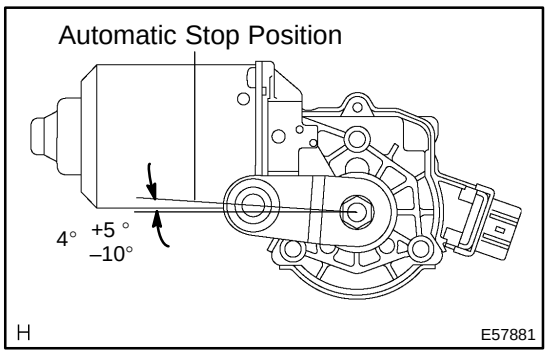

(3) Check the automatic stop position.

WINDSHIELD WIPER MOTOR ASSY

6604T–01

REPLACEMENT

1. REMOVE FRONT WIPER ARM HEAD CAP

2. REMOVE FR WIPER ARM LH

(a) Operate the wiper and stop the windshield wiper motor assy at the automatic stop position.

3. REMOVE FR WIPER ARM RH

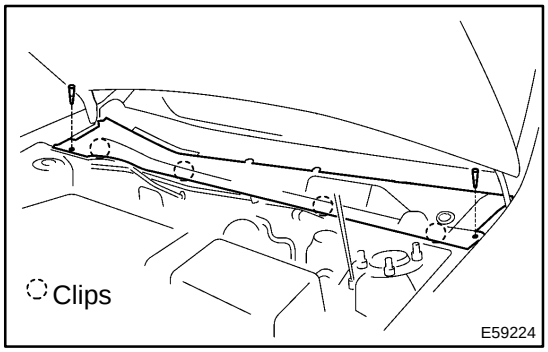

4. REMOVE COWL TOP VENTILATOR LOUVER SUB–ASSY

(a) Remove the 6 clips and cowl top ventilator louver sub assy.

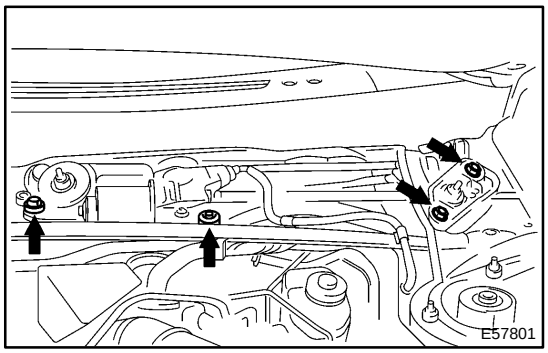

5. REMOVE WIPER LINK ASSY

(a) Disconnect the connector.
(b) Remove the 4 bolts and wiper link assy.

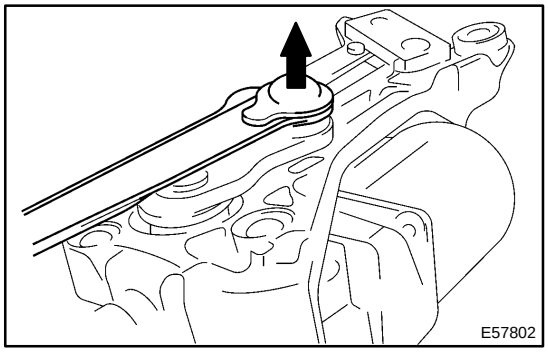

6. REMOVE WINDSHIELD WIPER MOTOR ASSY

(a) Disengage the meshing of rod at the clank arm pivot of the windshield wiper motor assy.

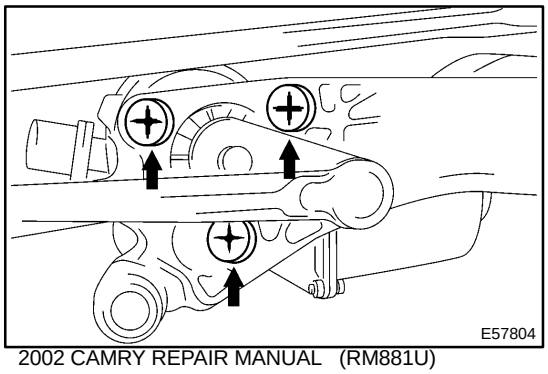

(b) Remove the 3 bolts and windshield wiper motor assy from the windshield wiper link assy.

HINT:
Turning the crank arm by hand prior to the operation will be able to remove the wiper motor easier.

7. INSTALL WINDSHIELD WIPER MOTOR ASSY

(a) Apply grease to the clank arm pivot of the windshield wiper motor assy.
(b) Install the windshield wiper motor assy with the 3 bolts to the windshield wiper link assy.
Torque: 5.4 N·m (55 kgf·cm, 48 in.·lbf)

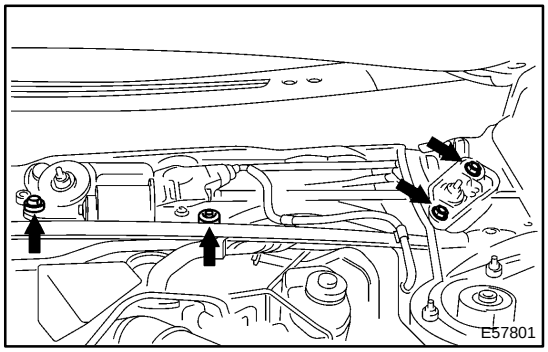

8. INSTALL WIPER LINK ASSY

(a) Install the windshield wiper link assy with the 4 bolts.
Torque: 7.0 N·m (71 kgf·cm, 62 in.·lbf)
(b) Connect the connector.

9. INSTALL FR WIPER ARM RH

(a) Operate the wiper, and stop the windshield wiper motor assy at the automatic stop position.

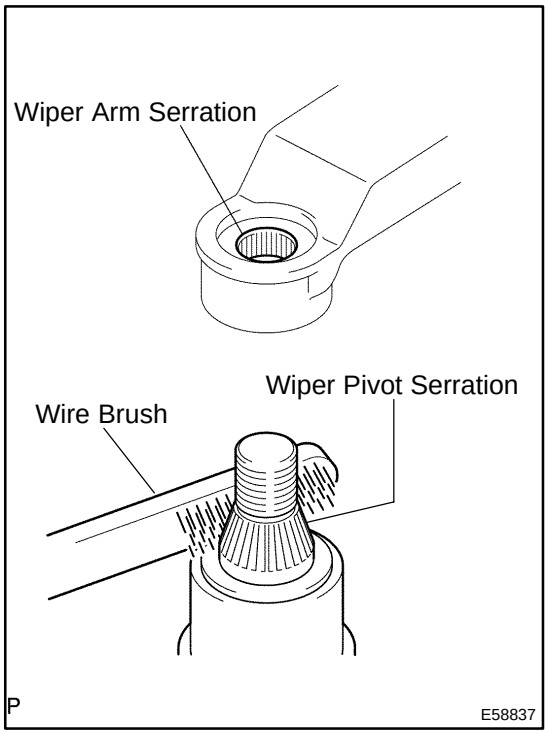

(b) Scrape off the serration part of the wiper arm with a round file or equivalent.
(c) Clean the wiper pivot serration with the wire brush.

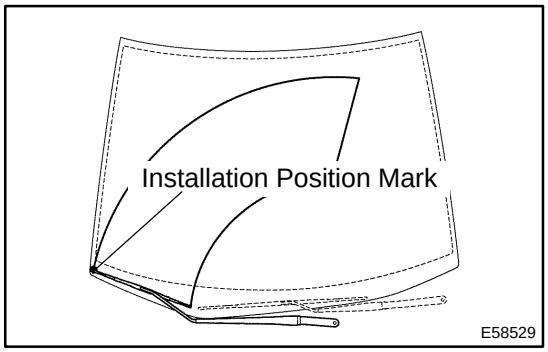

(d) Align the FR wiper blade front end with the mark and install the FR wiper arm RH with the nut.
Torque: 20.1 N·m (205 kgf·cm, 15 ft·lbf)

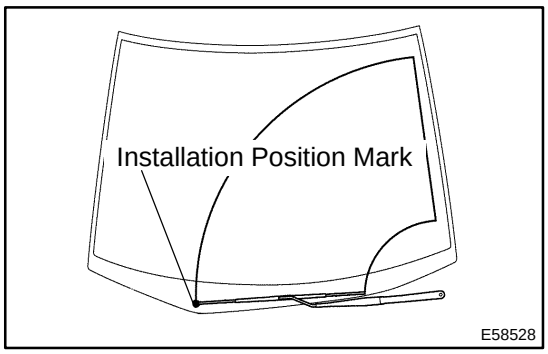

10. INSTALL FR WIPER ARM LH

(a) Clean the wiper pivot serration with the wire brush.
(b) Align the FR wiper blade front tip with the mark and install the FR wiper arm LH with the nut.
Torque: 20.1 N·m (205 kgf·cm, 15 ft·lbf)
(c) Operate the wiper while running the water or the washer fluid over the window, and check the wiping condition and that the wiper does not hit against the vehicle body.

WIPER RUBBER LH

6604U–01

REPLACEMENT

1. REMOVE FR WIPER BLADE LH

(a) Remove the FR wiper blade LH from the front wiper arm LH.

NOTICE:

Do not fold down the front wiper arm with the front wiper blade being removed from it.

2. REMOVE WIPER RUBBER LH

(a) Remove the FR wiper rubber LH from the FR wiper blade LH.

(b) Remove the 2 wiper rubber backing plates from the wiper rubber LH.

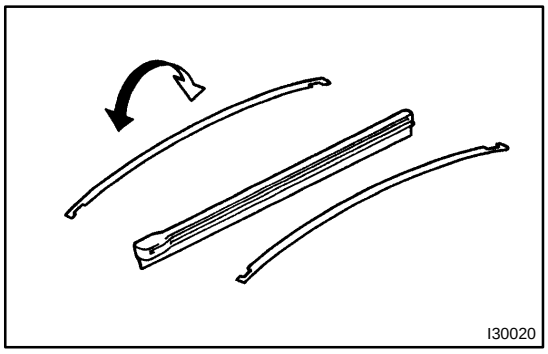

3. INSTALL WIPER RUBBER LH

(a) Install the 2 wiper rubber backing plates to the wiper rubber LH.

NOTICE:

Be careful to observe and keep direction of curvature for correct replacement.

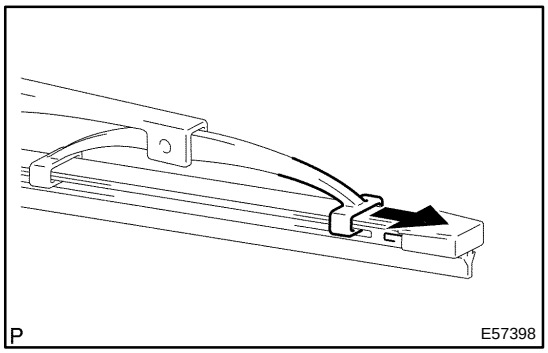

(b) Install the wiper rubber LH so that the head part (Longer side) of the wiper rubber faces the arm axle side.

NOTICE:

- **Push in the front wiper blade into the grooves of the wiper rubber to engage them completely.**
- **Put back the wiper arm of passenger side before driver side wiper arm is put back.**

WINDSHIELD WIPER SWITCH ASSY

6604V–01

REPLACEMENT

1. REMOVE STEERING COLUMN COVER
(See Page 50–9)

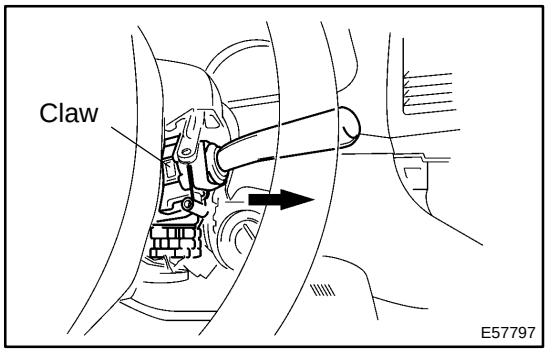

2. REMOVE WINDSHIELD WIPER SWITCH ASSY

(a) Disconnect the connector.
(b) Using a screwdriver, release the claw and pull out the windshield wiper switch assy.

NOTICE:
Pressing the claw hard breaks the claw.
HINT:
Tape the screwdriver tip before use.

AUDIO & VISUAL SYSTEM

6708Z–01

COMPONENTS

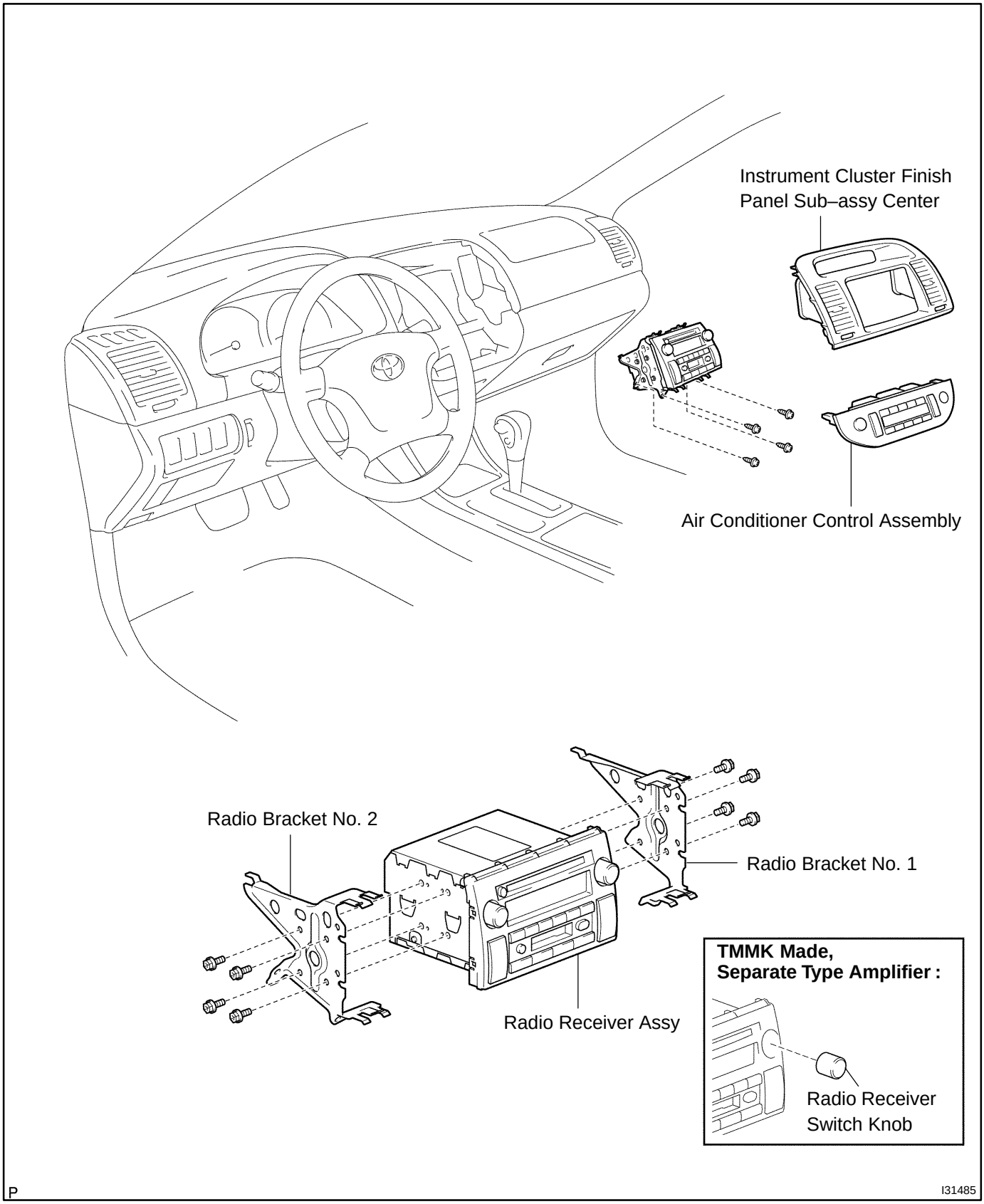

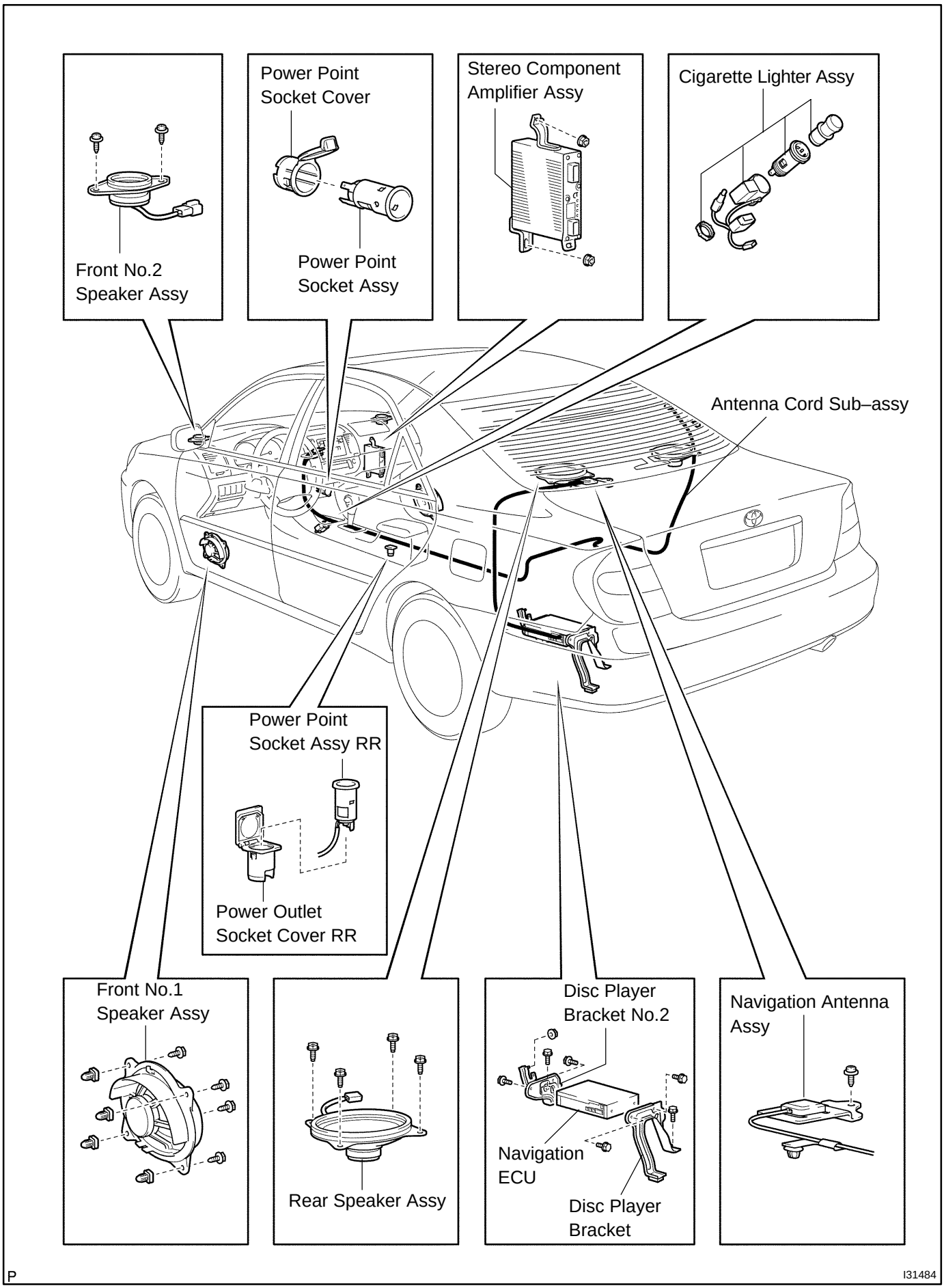
Front No.2
Speaker Assy
Power Point
Socket Cover
Power Point
Socket Assy
Stereo Component
Amplifier Assy
Cigarette Lighter Assy
Antenna Cord Sub–assy
Power Point
Socket Assy RR
Power Outlet
Socket Cover RR
Front No.1
Speaker Assy
Rear Speaker Assy
Disc Player
Bracket No.2
Navigation
ECU
Disc Player
Bracket
Navigation Antenna
Assy
P
I31484

RADIO RECEIVER ASSY

REPLACEMENT

6708W–01

HINT:

COMPONENTS: See page 67–1

1. REMOVE AIR CONDITIONER CONTROL ASSEMBLY(See page 71–12)

2. REMOVE INSTRUMENT CLUSTER FINISH PANEL SUB–ASSY CENTER(See page 71–12)

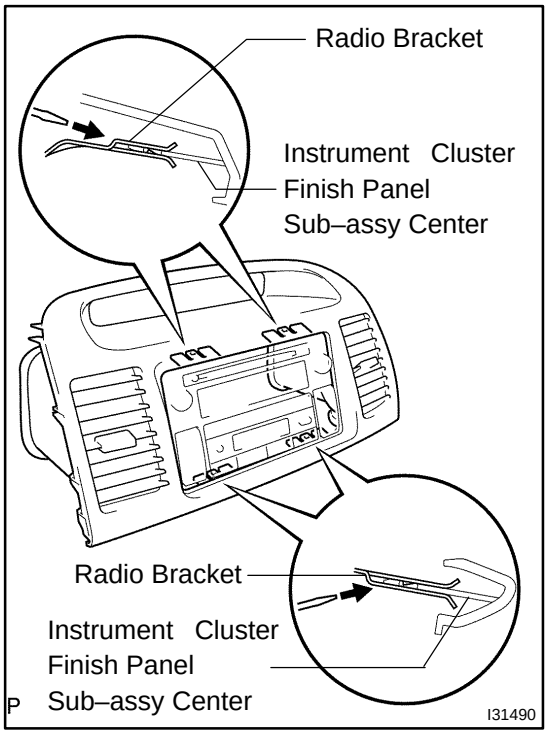

3. REMOVE RADIO RECEIVER ASSY

(a) Insert a screwdriver at indicated point and remove the radio receiver assy from instrument cluster finish panel sub–assy center.

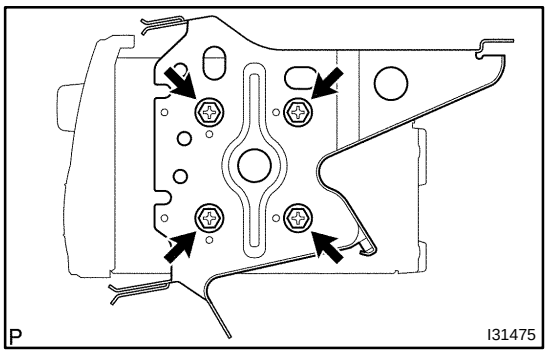

4. REMOVE RADIO BRACKET NO.1

(a) Remove the 4 screws and radio bracket No.1.

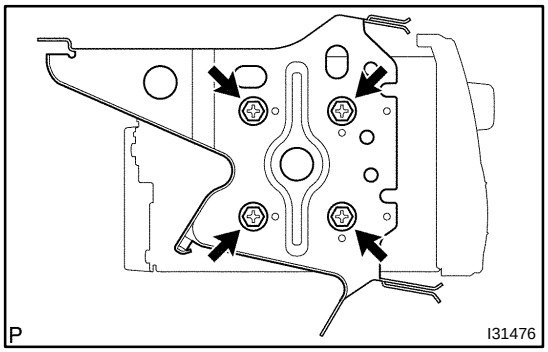

5. REMOVE RADIO BRACKET NO.2

(a) Remove the 4 screws and radio bracket No.2.

NAVIGATION RECEIVER ASSY

6708X–01

REPLACEMENT

HINT:

COMPONENTS: See page 67–1

1. REMOVE AIR CONDITIONER CONTROL ASSEMBLY(See page 71–12)

2. REMOVE INSTRUMENT CLUSTER FINISH PANEL SUB–ASSY CENTER(See page 71–12)

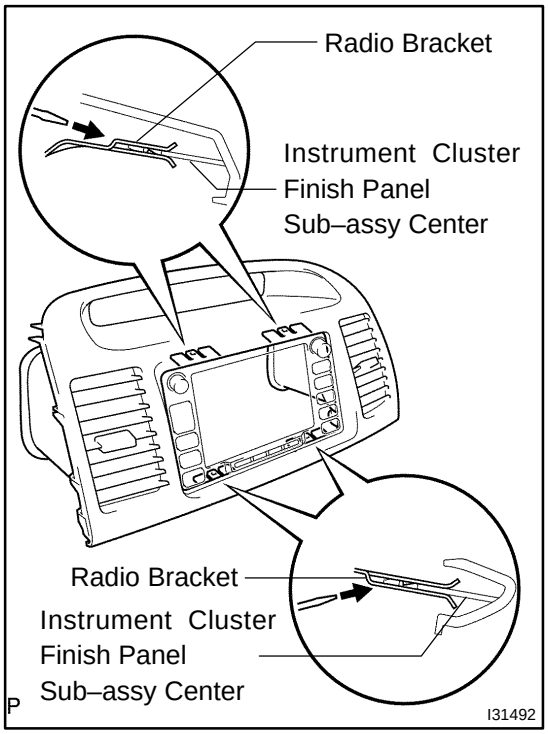

3. REMOVE NAVIGATION RECEIVER ASSY

(a) Insert a screwdriver at indicated point and remove the navigation receiver assy from instrument cluster finish panel sub–assy.

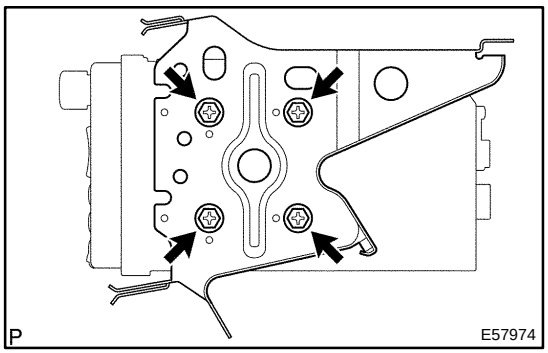

4. REMOVE RADIO RECEIVER BRACKET NO.1

(a) Remove the 4 screws and radio receiver bracket No1.

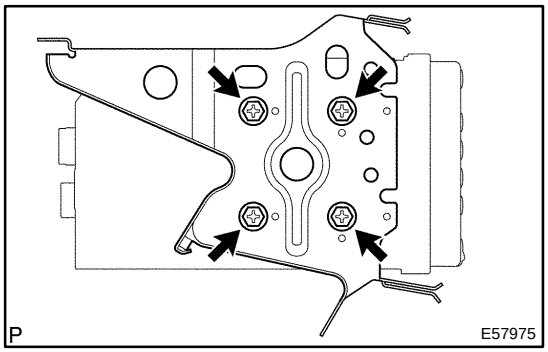

5. REMOVE RADIO RECEIVER BRACKET NO.1

(a) Remove the 4 screws and radio receiver bracket No.1.

FRONT NO.1 SPEAKER ASSY

67093–02

REPLACEMENT

HINT:

COMPONENTS: See page 67–1

1. **REMOVE POWER WINDOW REGULATOR MASTER SWITCH ASSY(See page 75–8)**
2. **REMOVE FRONT DOOR LOWER FRAME BRACKET GARNISH LH(See page 75–8)**
3. **REMOVE FRONT DOOR INSIDE HANDLE BEZEL PLUG LH(See page 75–8)**
4. **REMOVE FRONT DOOR TRIM BOARD SUB–ASSY LH(See page 75–8)**

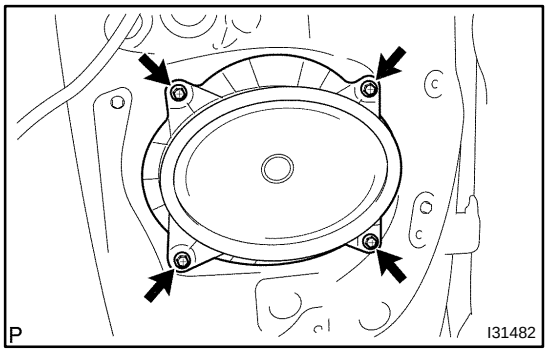

5. REMOVE FRONT NO.1 SPEAKER ASSY

(a) Disconnect the connector.

(b) Remove the 4 screws and front No.1 speaker assy.

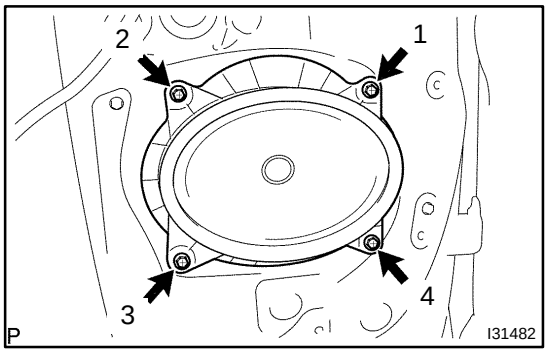

6. INSTALL FRONT NO.1 SPEAKER ASSY

(a) Install the front No.1 speaker assy with the 4 screws.

NOTICE:

Install them in the order shown in the illustration.

(b) Connect the connector.

FRONT NO.2 SPEAKER ASSY

6708Y–02

REPLACEMENT

HINT:

COMPONENTS: See page 67–1

1. REMOVE INSTRUMENT PANEL SPEAKER PANEL SUB–ASSY NO.2(See page 71–12)

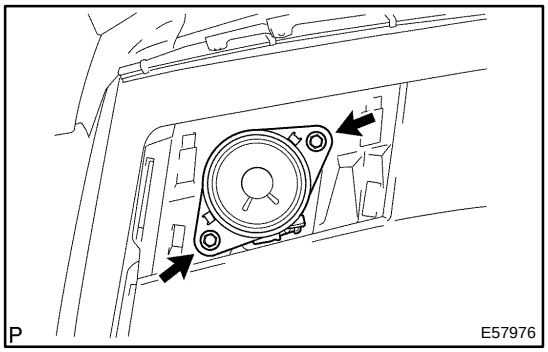

2. REMOVE FRONT NO.2 SPEAKER ASSY

(a) Remove the 2 bolts.

(b) Disconnect the connector and remove the front No.2 speaker assy.

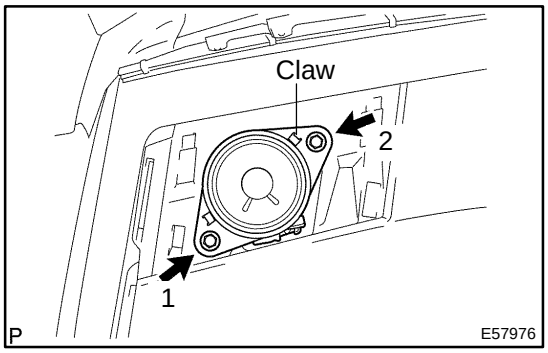

3. INSTALL FRONT NO.2 SPEAKER ASSY

(a) Connect the connector.

(b) Align a claw with the notch of the instrument panel safety pad with 2 bolts, and install the front No.2 speaker assy.

NOTICE:

Install them in the order shown in the illustration.

REAR SPEAKER ASSY

67091–01

REPLACEMENT

HINT:

COMPONENTS: See page 67–1

1. **REMOVE REAR SEAT CUSHION ASSY(See page 72–34 or 72–38)**
2. **REMOVE REAR SEAT BACK ASSY RH(See page 72–34 or 72–38)**
3. **REMOVE REAR SEAT BACK ASSY LH(See page 72–34 or 72–38)**
4. **REMOVE REAR SIDE SEAT BACK ASSY RH(TMC MADE) (See page 72–34)**
5. **REMOVE REAR SIDE SEAT BACK ASSY LH(TMC MADE) (See page 72–34)**
6. **REMOVE REAR SIDE SEAT BACK ASSY RH(TMMK MADE) (See page 72–38)**
7. **REMOVE REAR SIDE SEAT BACK ASSY LH(TMMK MADE) (See page 72–38)**
8. **REMOVE ROOF SIDE GARNISH INNER RH(W/O CURTAIN SHIELD AIR BAG) (See page 76–20)**
9. **REMOVE ROOF SIDE GARNISH INNER LH(W/O CURTAIN SHIELD AIR BAG) (See page 76–20)**
10. **REMOVE ROOF SIDE GARNISH INNER RH(W/ CURTAIN SHIELD AIR BAG) (See page 76–20)**
11. **REMOVE ROOF SIDE GARNISH INNER LH(W/ CURTAIN SHIELD AIR BAG) (See page 76–20)**
12. **REMOVE REAR SEAT SHOULDER BELT COVER RH (See page 61–14 or 61–17)**
13. **REMOVE ROOM PARTITION BOARD ASSY(TMMK MADE) (See page 61–17)**

14. REMOVE PACKAGE TRAY TRIM PANEL ASSY(TMC MADE)

(a) Pull the package tray trim panel assy upward to disengage 2 clips.
(b) Put the bezel and anchor part of the seat belt through the slit part.
(c) Pull it as shown in the illustration to disengage 5 claws.
(d) Disconnect the connector and remove the package tray trim panel assy.

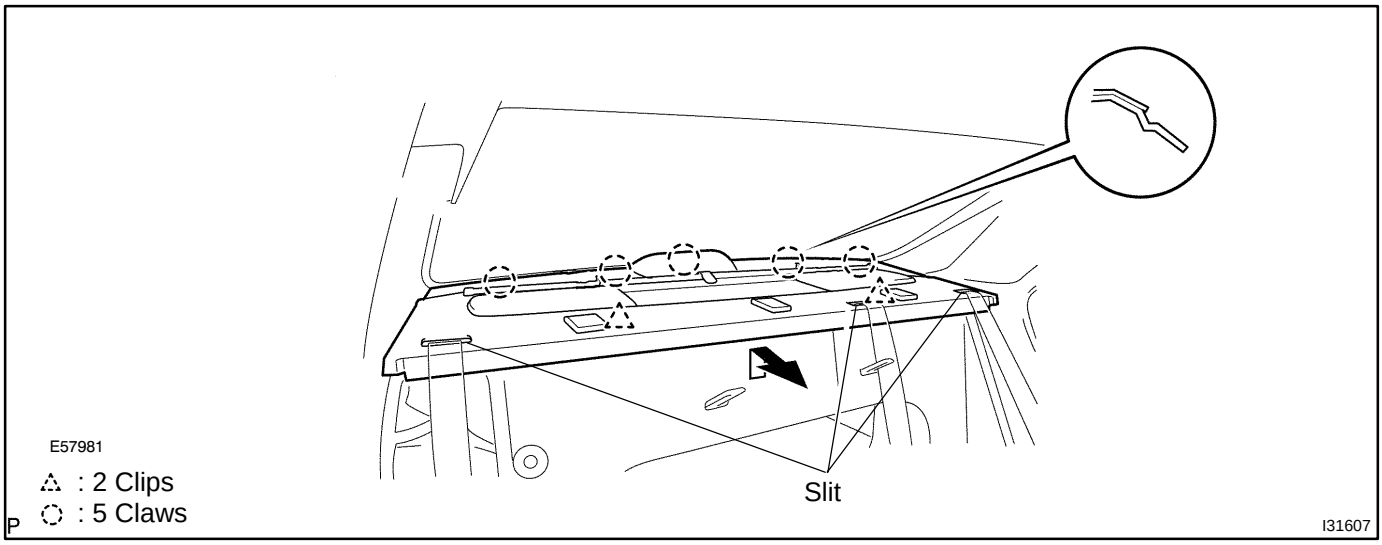

15. REMOVE PACKAGE TRAY TRIM PANEL ASSY(TMMK MADE)
(See page 61–17)
16. REMOVE REAR SEAT 3 POINT TYPE BELT ASSY OUTER(TMC MADE)
(See page 61–14)
17. REMOVE REAR SEAT INNER W/CENTER BELT ASSY RH(TMC MADE)
(See page 61–14)
18. REMOVE REAR SEAT INNER W/CENTER BELT ASSY LH(TMC MADE)
(See page 61–14)
19. REMOVE REAR SEAT 3 POINT TYPE BELT ASSY OUTER(TMMK MADE)
(See page 61–17)
20. REMOVE REAR SEAT INNER W/CENTER BELT ASSY RH(TMMK MADE)
(See page 61–17)
21. REMOVE REAR SEAT INNER W/CENTER BELT ASSY LH(TMMK MADE)
(See page 61–17)

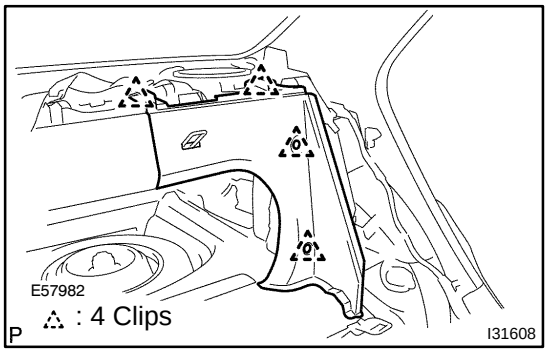

22. REMOVE ROOM PARTITION BOARD LH(TMC MADE)

(a) Disengage 4 clips and remove the room partition board LH.

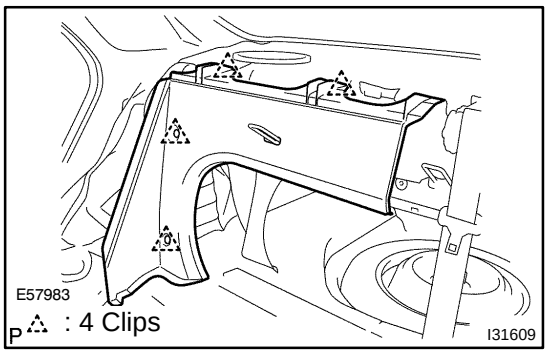

23. REMOVE ROOM PARTITION BOARD RH(TMC MADE)

(a) Disengage 4 clips and remove the room partition board RH.

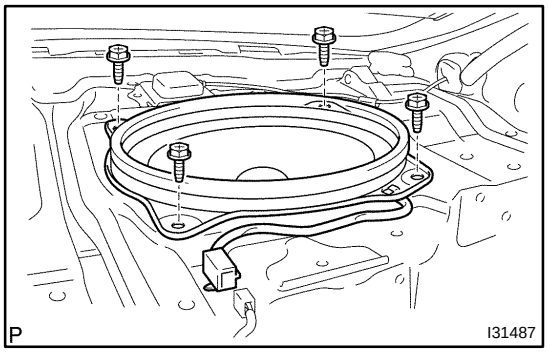

24. REMOVE REAR SPEAKER ASSY

(a) Disconnect the connector.
(b) Remove the 4 screws and rear speaker assy.

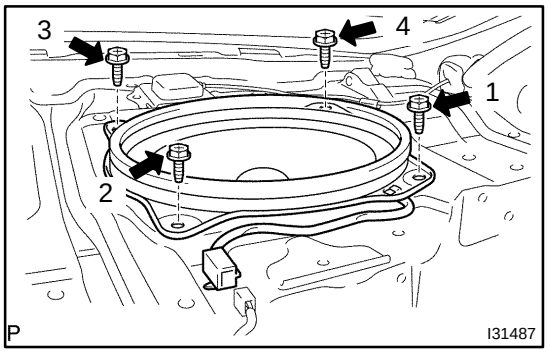

25. INSTALL REAR SPEAKER ASSY

(a) Install the rear speaker assy with the 4 screws.

NOTICE:
Install them in the order shown in the illustration.

(b) Connect the connector.

26. INSTALL REAR SEAT INNER W/CENTER BELT ASSY RH(TMC MADE)
(See page 61–14)
27. INSTALL REAR SEAT 3 POINT TYPE BELT ASSY OUTER(TMC MADE)
(See page 61–14)
28. INSTALL REAR SEAT INNER W/CENTER BELT ASSY LH(TMC MADE)
(See page 61–14)
29. INSTALL REAR SEAT INNER W/CENTER BELT ASSY RH(TMMK MADE)
(See page 61–17)
30. INSTALL REAR SEAT 3 POINT TYPE BELT ASSY OUTER(TMMK MADE)
(See page 61–17)
31. INSTALL REAR SEAT INNER W/CENTER BELT ASSY LH(TMMK MADE)
(See page 61–17)
32. INSTALL REAR SIDE SEAT BACK ASSY LH(TMC MADE)
(See page 72–34)
33. INSTALL REAR SIDE SEAT BACK ASSY RH(TMC MADE)
(See page 72–34)
34. INSTALL REAR SIDE SEAT BACK ASSY LH(TMMK MADE)
(See page 72–38)
35. INSTALL REAR SIDE SEAT BACK ASSY RH(TMMK MADE)
(See page 72–38)

36. INSTALL REAR SEAT BACK ASSY RH(See page 72–34 or 72–38)
37. INSTALL REAR SEAT BACK ASSY LH(See page 72–34 or 72–38)

STEREO COMPONENT AMPLIFIER ASSY

67092–01

REPLACEMENT

HINT:

COMPONENTS: See page 67–1

1. **REMOVE FRONT DOOR SCUFF PLATE RH**
   (See page 71–12)
2. **REMOVE COWL SIDE TRIM SUB–ASSY RH**
   (See page 71–12)
3. **REMOVE INSTRUMENT PANEL UNDER COVER SUB–ASSY NO.1**
   (See page 71–12)
4. **REMOVE GLOVE COMPARTMENT DOOR PAD**
   (See page 71–12)
5. **REMOVE INSTRUMENT PANEL SUB–ASSY LOWER**
   (See page 71–12)

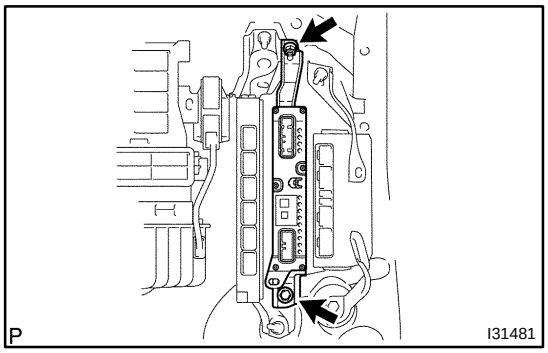

6. **REMOVE STEREO COMPONENT AMPLIFIER ASSY**

(a) Disconnect the connectors.
(b) Remove the 2 nuts and stereo component amplifier assy.

ANTENNA CORD SUB–ASSY

67097–01

REPLACEMENT

HINT:

COMPONENTS: See page 67–1

1. **REMOVE FRONT DOOR SCUFF PLATE LH**
   (See page 71–12)
2. **REMOVE FRONT DOOR SCUFF PLATE RH**
   (See page 71–12)
3. **REMOVE COWL SIDE TRIM SUB–ASSY LH**
   (See page 71–12)
4. **REMOVE COWL SIDE TRIM SUB–ASSY RH**
   (See page 71–12)
5. **REMOVE INSTRUMENT PANEL COIN BOX SUB–ASSY**
   (See page 71–12)
6. **REMOVE INSTRUMENT PANEL SUB–ASSY UPPER**
   (See page 71–12)
7. **REMOVE INSTRUMENT PNL INSERT SUB–ASSY LWR LH (TMMK MADE)**
   (See page 71–12)
8. **REMOVE AIR CONDITIONER CONTROL ASSEMBLY(See page 71–12)**
9. **REMOVE INSTRUMENT CLUSTER FINISH PANEL SUB–ASSY CENTER**
   (See page 71–12)
10. **REMOVE INSTRUMENT PANEL UNDER COVER SUB–ASSY NO.1**
    (See page 71–12)
11. **REMOVE GLOVE COMPARTMENT DOOR PAD**
    (See page 71–12)
12. **REMOVE INSTRUMENT PANEL SUB–ASSY LOWER**
    (See page 71–12)
13. **REMOVE FLOOR SHIFT SHIFT LEVER KNOB SUB–ASSY (M/T TRANSAXLE)**
    (See page 71–12)
14. **REMOVE CONSOLE PANEL UPPER REAR**
    (See page 71–12)
15. **REMOVE CONSOLE BOX CARPET**
16. **REMOVE RR CONSOLE BOX**
    (See page 71–12)
17. **REMOVE INSTRUMENT PANEL CUP HOLDER TRAY (W/O ASHTRAY)**
    (See page 71–12)
18. **REMOVE INSTRUMENT PANEL ASH RECEPTACLE ASSY (W/ ASHTRAY)**
    (See page 71–12)
19. **REMOVE CONSOLE PANEL UPPER**
    (See page 71–12)
20. **REMOVE CONSOLE BOX FRONT**
    (See page 71–12)
21. **REMOVE INSTRUMENT PANEL FINISH PANEL LOWER CENTER**
    (See page 71–12)
22. **REMOVE FRONT SEAT TRACK COVER LH REAR OUTER (TMC MADE)**
    (See page 72–7)
23. **REMOVE FRONT SEAT TRACK COVER LH REAR INNER (TMC MADE)**
    (See page 72–7)

24. REMOVE FRONT SEAT TRACK COVER RH REAR OUTER (TMC MADE)
(See page 72–7)
25. REMOVE FRONT SEAT TRACK COVER RH REAR INNER (TMC MADE)
(See page 72–7)
26. REMOVE SEAT TRACK COVER LH(TMMK MADE)
(See page 72–14)
27. REMOVE SEAT TRACK BRACKET COVER INNER LH(TMMK MADE)
(See page 72–14)
28. REMOVE SEAT TRACK COVER RH(TMMK MADE)
(See page 72–14)
29. REMOVE SEAT TRACK BRACKET COVER INNER RH(TMMK MADE)
(See page 72–14)
30. REMOVE FRONT SEAT ASSY RH (POWER SEAT)(See page 72–7)
31. REMOVE FRONT SEAT ASSY RH (MANUAL SEAT)(See page 72–20)
32. REMOVE FRONT SEAT ASSY LH (POWER SEAT)(See page 72–7)
33. REMOVE FRONT SEAT ASSY LH (MANUAL SEAT)(See page 72–20)
34. REMOVE REAR SEAT CUSHION ASSY(See page 72–34 or 72–38)
35. REMOVE REAR SEAT BACK ASSY RH(See page 72–34 or 72–38)
36. REMOVE REAR SEAT BACK ASSY LH(See page 72–34 or 72–38)
37. REMOVE REAR SIDE SEAT BACK ASSY RH (TMC MADE)
(See page 72–34)
38. REMOVE REAR SIDE SEAT BACK ASSY LH (TMC MADE)
(See page 72–34)
39. REMOVE REAR SIDE SEAT BACK ASSY RH(TMMK MADE)
(See page 72–38)
40. REMOVE REAR SIDE SEAT BACK ASSY LH(TMMK MADE)
(See page 72–38)
41. REMOVE ROOF SIDE GARNISH INNER RH (W/O CURTAIN SHIELD AIR BAG)
(See page 76–20)
42. REMOVE ROOF SIDE GARNISH INNER LH (W/O CURTAIN SHIELD AIR BAG)
(See page 76–20)
43. REMOVE ROOF SIDE GARNISH INNER RH (W/ CURTAIN SHIELD AIR BAG)
(See page 76–20)
44. REMOVE ROOF SIDE GARNISH INNER LH (W/ CURTAIN SHIELD AIR BAG)
(See page 76–20)
45. REMOVE REAR SEAT SHOULDER BELT COVER RH
(See page 61–14)
46. REMOVE ROOM PARTITION BOARD ASSY(TMMK MADE)
(See page 61–17)
47. REMOVE PACKAGE TRAY TRIM PANEL ASSY(TMMK MADE)
(See page 61–17)
48. REMOVE PACKAGE TRAY TRIM PANEL ASSY (TMC MADE)
(See page 67–7)
49. REMOVE REAR SEAT 3 POINT TYPE BELT ASSY OUTER (TMC MADE)
(See page 61–14)
50. REMOVE REAR SEAT INNER W/CENTER BELT ASSY RH (TMC MADE)
(See page 61–14)
51. REMOVE REAR SEAT INNER W/CENTER BELT ASSY LH (TMC MADE)
(See page 61–14)

52. REMOVE REAR SEAT 3 POINT TYPE BELT ASSY OUTER(TMMK MADE)
(See page 61–17)

53. REMOVE REAR SEAT INNER W/CENTER BELT ASSY RH(TMMK MADE)
(See page 61–17)

54. REMOVE REAR SEAT INNER W/CENTER BELT ASSY LH(TMMK MADE)
(See page 61–17)

55. REMOVE ROOM PARTITION BOARD LH (TMC MADE)
(See page 67–7)

56. REMOVE ROOM PARTITION BOARD RH (TMC MADE)
(See page 67–7)

57. REMOVE AIR DUCT REAR NO.2
(See page 55–29)

58. REMOVE ANTENNA CORD SUB–ASSY

(a) Remove the nut and 2 bolts.
(b) Disconnect the connectors.
(c) Remove the 12 clamps and antenna cord sub–assy.

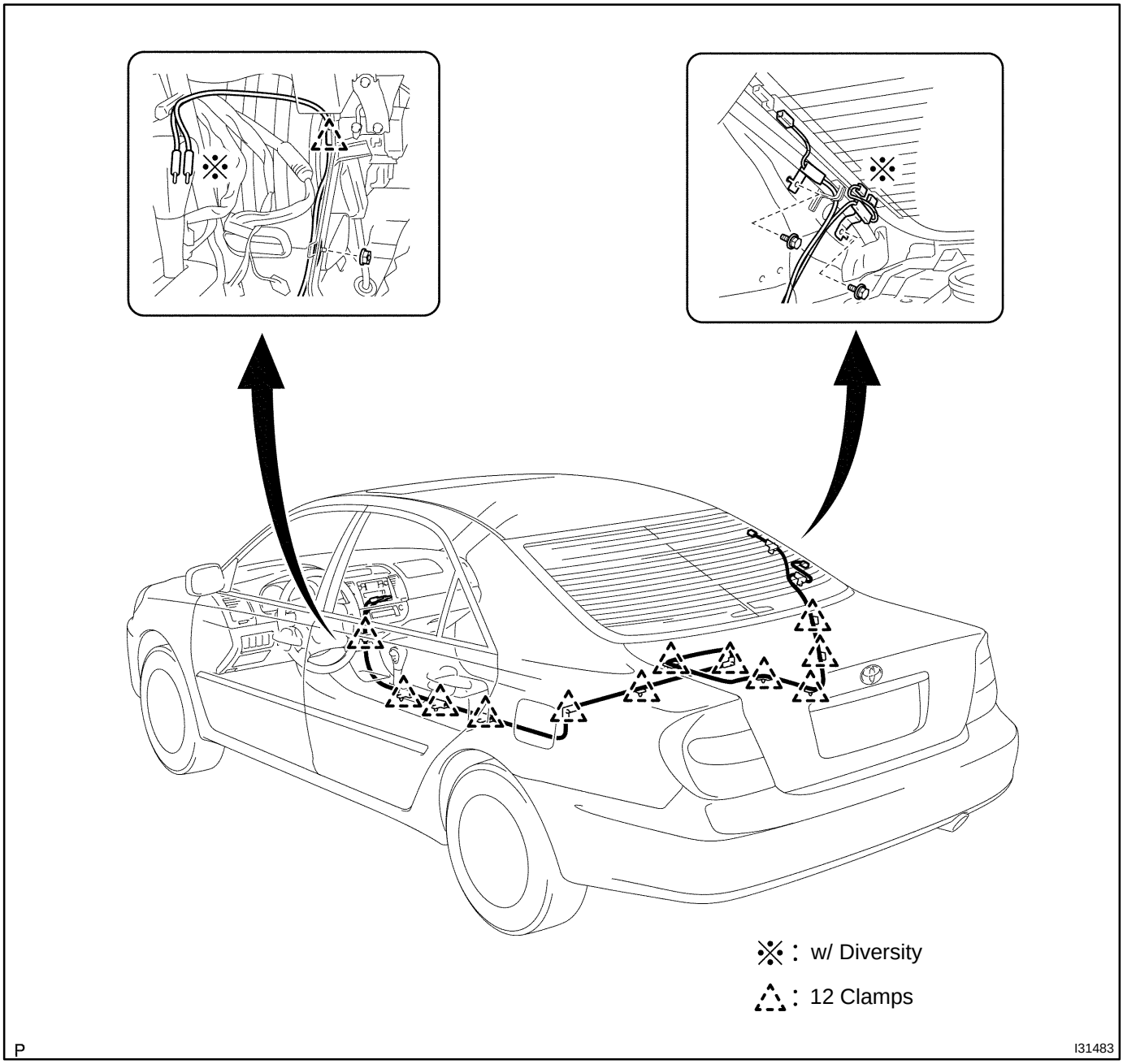

59. INSTALL REAR SEAT INNER W/CENTER BELT ASSY RH (TMC MADE)
(See page 61–14)
60. INSTALL REAR SEAT 3 POINT TYPE BELT ASSY OUTER (TMC MADE)
(See page 61–14)
61. INSTALL REAR SEAT INNER W/CENTER BELT ASSY LH (TMC MADE)
(See page 61–14)
62. INSTALL REAR SEAT INNER W/CENTER BELT ASSY RH(TMMK MADE)
(See page 61–17)
63. INSTALL REAR SEAT 3 POINT TYPE BELT ASSY OUTER(TMMK MADE)
(See page 61–17)

64. INSTALL REAR SEAT INNER W/CENTER BELT ASSY LH(TMMK MADE) (See page 61–17)
65. INSTALL REAR SIDE SEAT BACK ASSY LH (TMC MADE) (See page 72–34)
66. INSTALL REAR SIDE SEAT BACK ASSY RH (TMC MADE) (See page 72–34)
67. INSTALL REAR SIDE SEAT BACK ASSY LH(TMMK MADE) (See page 72–38)
68. INSTALL REAR SIDE SEAT BACK ASSY RH(TMMK MADE) (See page 72–38)
69. INSTALL REAR SEAT BACK ASSY RH(See page 72–34)
70. INSTALL REAR SEAT BACK ASSY LH(See page 72–34)
71. INSTALL FRONT SEAT ASSY LH (POWER SEAT)(See page 72–7)
72. INSTALL FRONT SEAT ASSY LH (MANUAL SEAT)(See page 72–20)
73. INSTALL FRONT SEAT ASSY RH (POWER SEAT)(See page 72–7)
74. INSTALL FRONT SEAT ASSY RH (MANUAL SEAT)(See page 72–20)

NAVIGATION ECU

67090–01

REPLACEMENT

HINT:

COMPONENTS: See page 67–1 or 76–4

1. REMOVE LUGGAGE COMPARTMENT FLOOR MAT

2. REMOVE SPARE WHEEL COVER ASSY

3. REMOVE LUGGAGE COMPARTMENT SIDE COVER SUB–ASSY RH

4. REMOVE LUGGAGE COMPARTMENT TRIM HOOK NO.1
(See page 76–5)

5. REMOVE REAR FLOOR FINISH PLATE
(See page 76–5)

6. REMOVE LUGGAGE COMPARTMENT TRIM COVER INNER LH
(See page 76–5)

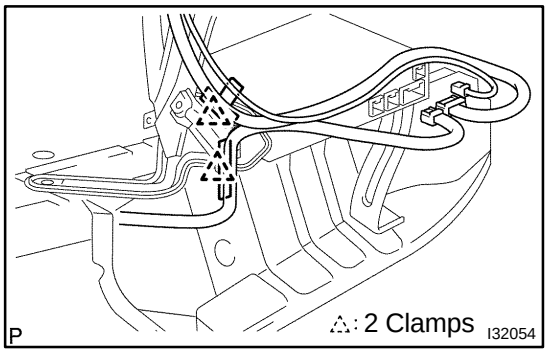

7. REMOVE NAVIGATION ECU

(a) Disconnect the connectors and remove the 2 clamps.

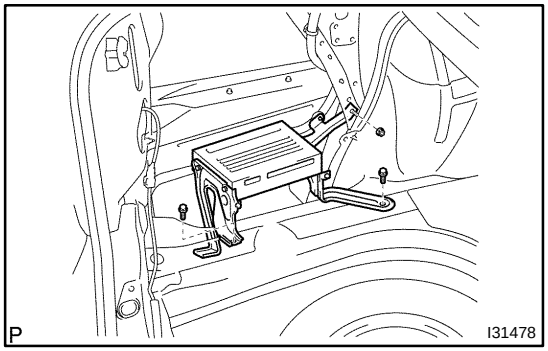

(b) Remove the nut and 2 bolts, then remove the navigation ECU.

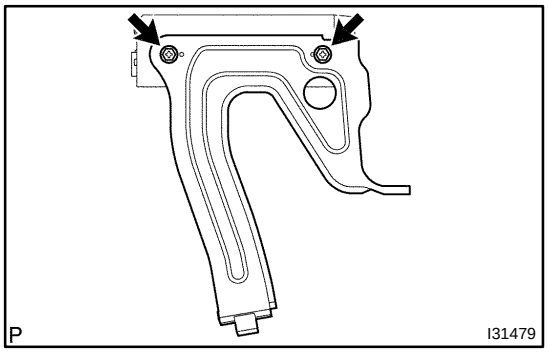

8. REMOVE DISC PLAYER BRACKET

(a) Remove the 2 screws and disc player bracket.

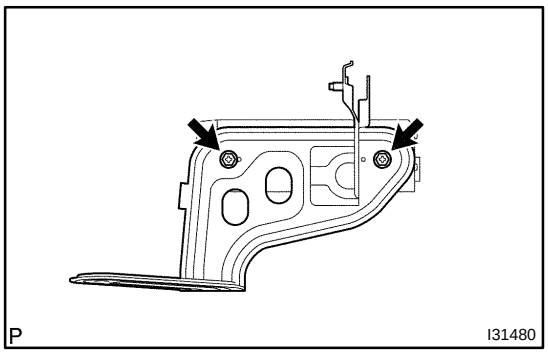

9. REMOVE DISC PLAYER BRACKET NO.2

(a) Remove the 2 screws and disc player bracket No. 2.

NAVIGATION ANTENNA ASSY

67099–01

REPLACEMENT

HINT:

COMPONENTS: See page 67–1

1. **REMOVE LUGGAGE COMPARTMENT FLOOR MAT**

2. **REMOVE SPARE WHEEL COVER ASSY**

3. **REMOVE LUGGAGE COMPARTMENT TRIM HOOK NO.1**
   (See page 76–5)
4. **REMOVE REAR FLOOR FINISH PLATE**
   (See page 76–5)
5. **REMOVE LUGGAGE COMPARTMENT TRIM COVER INNER LH**
   (See page 76–5)
6. **REMOVE REAR SEAT CUSHION ASSY(See page 72–34 or 72–38)**
7. **REMOVE REAR SEAT BACK ASSY RH(See page 72–34 or 72–38)**
8. **REMOVE REAR SEAT BACK ASSY LH(See page 72–34 or 72–38)**
9. **REMOVE REAR SIDE SEAT BACK ASSY RH(TMC MADE)**
   (See page 72–34)
10. **REMOVE REAR SIDE SEAT BACK ASSY LH(TMC MADE)**
    (See page 72–34)
11. **REMOVE REAR SIDE SEAT BACK ASSY RH(TMMK MADE)**
    (See page 72–38)
12. **REMOVE REAR SIDE SEAT BACK ASSY LH(TMMK MADE)**
    (See page 72–38)
13. **REMOVE ROOF SIDE GARNISH INNER RH(W/O CURTAIN SHIELD AIR BAG)**
    (See page 76–20)
14. **REMOVE ROOF SIDE GARNISH INNER LH(W/O CURTAIN SHIELD AIR BAG)**
    (See page 76–20)
15. **REMOVE ROOF SIDE GARNISH INNER RH(W/ CURTAIN SHIELD AIR BAG)**
    (See page 76–20)
16. **REMOVE ROOF SIDE GARNISH INNER LH(W/ CURTAIN SHIELD AIR BAG)**
    (See page 76–20)
17. **REMOVE REAR SEAT SHOULDER BELT COVER RH**
    (See page 61–14 or 61–17)
18. **REMOVE ROOM PARTITION BOARD ASSY(TMMK MADE)**
    (See page 61–17)
19. **REMOVE PACKAGE TRAY TRIM PANEL ASSY(TMC MADE)**
    (See page 67–7)
20. **REMOVE PACKAGE TRAY TRIM PANEL ASSY(TMMK MADE)**
    (See page 61–17)
21. **REMOVE REAR SEAT 3 POINT TYPE BELT ASSY OUTER(TMC MADE)**
    (See page 61–14)
22. **REMOVE REAR SEAT INNER W/CENTER BELT ASSY RH(TMC MADE)**
    (See page 61–14)
23. **REMOVE REAR SEAT INNER W/CENTER BELT ASSY LH(TMC MADE)**
    (See page 61–14)

24. REMOVE REAR SEAT 3 POINT TYPE BELT ASSY OUTER(TMMK MADE)
(See page 61–17)

25. REMOVE REAR SEAT INNER W/CENTER BELT ASSY RH(TMMK MADE)
(See page 61–17)

26. REMOVE REAR SEAT INNER W/CENTER BELT ASSY LH(TMMK MADE)
(See page 61–17)

27. REMOVE ROOM PARTITION BOARD LH(TMC MADE)
(See page 67–7)

28. REMOVE ROOM PARTITION BOARD RH(TMC MADE)
(See page 67–7)

29. REMOVE NAVIGATION ANTENNA ASSY

(a) Disconnect the connector.

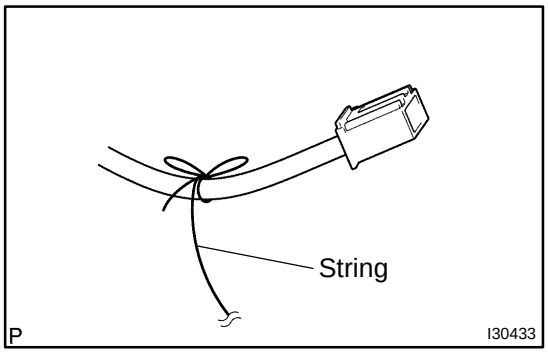

(b) Tie the string at the tip of the cable of the navigation antenna assy.

(c) Remove the screw.
(d) Remove the 2 clamps and navigation antenna assy.

NOTICE:

As the string is used at the time of installation,remain it putting through the luggage room and the room side.

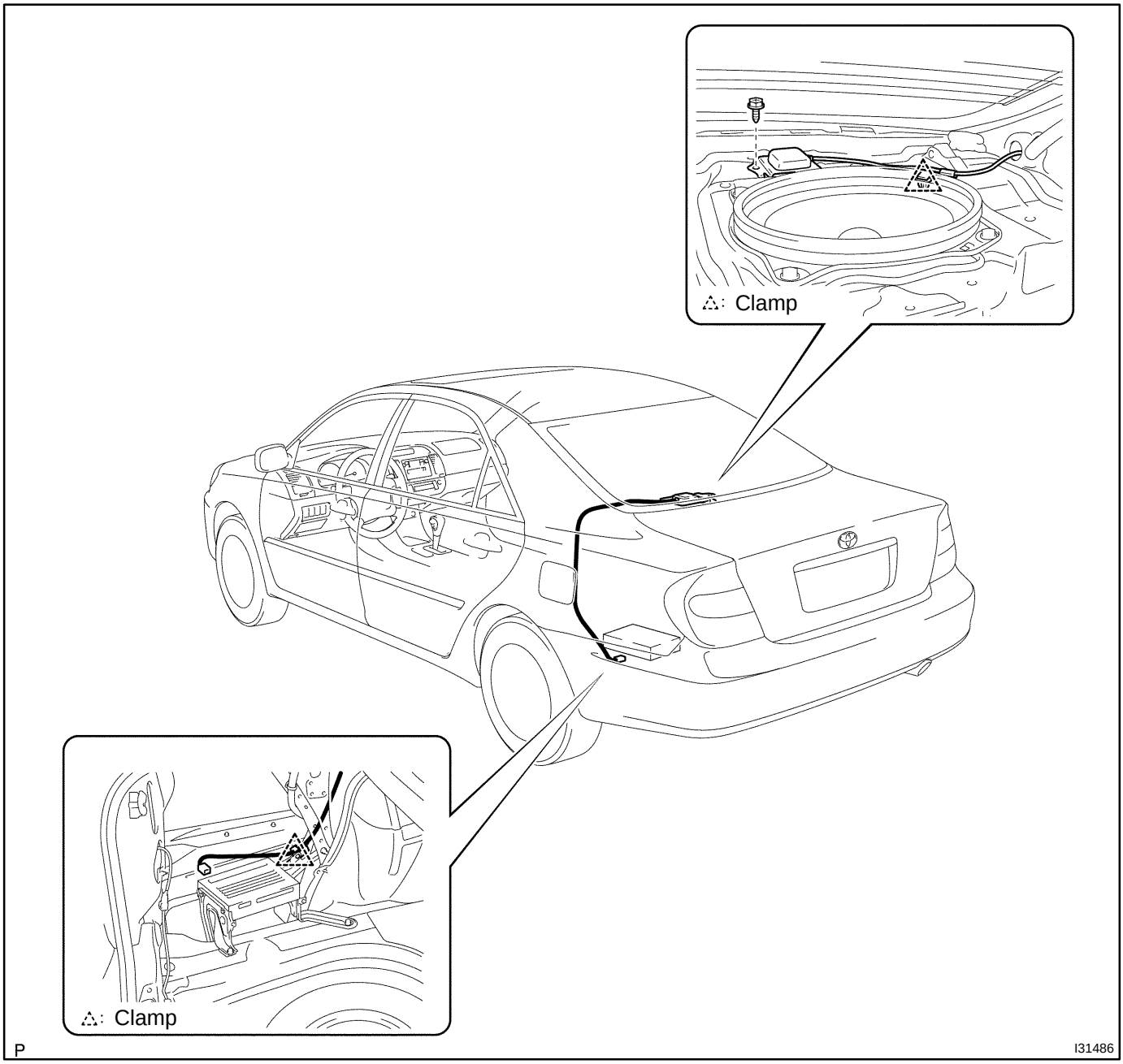

30. INSTALL NAVIGATION ANTENNA ASSY

(a) Detach the string put through the luggage room and the room side from the connector and attach it with a new navigation antenna assy.
(b) Using this string put the navigation antenna assy through the luggage room and the room side.

NOTICE:

To prevent the connector from being damaged, wrap protective tape around the tip of connector of the navigation antenna assy.

(c) Install the navigation antenna assy with screw and 2 clamps.
(d) Connect the connector.

31. INSTALL REAR SEAT INNER W/CENTER BELT ASSY RH(TMC MADE) (See page 61–14)
32. INSTALL REAR SEAT 3 POINT TYPE BELT ASSY OUTER(TMC MADE) (See page 61–14)
33. INSTALL REAR SEAT INNER W/CENTER BELT ASSY LH(TMC MADE) (See page 61–14)
34. INSTALL REAR SEAT INNER W/CENTER BELT ASSY RH(TMMK MADE) (See page 61–17)
35. INSTALL REAR SEAT 3 POINT TYPE BELT ASSY OUTER(TMMK MADE) (See page 61–17)
36. INSTALL REAR SEAT INNER W/CENTER BELT ASSY LH(TMMK MADE) (See page 61–17)
37. INSTALL REAR SIDE SEAT BACK ASSY LH(TMC MADE) (See page 72–34)
38. INSTALL REAR SIDE SEAT BACK ASSY RH(TMC MADE) (See page 72–34)
39. INSTALL REAR SIDE SEAT BACK ASSY LH(TMMK MADE) (See page 72–38)
40. INSTALL REAR SIDE SEAT BACK ASSY RH(TMMK MADE) (See page 72–38)
41. INSTALL REAR SEAT BACK ASSY RH(See page 72–34 or 72–38)
42. INSTALL REAR SEAT BACK ASSY LH(See page 72–34 or 72–38)

CIGARETTE LIGHTER ASSY

67096–01

REPLACEMENT

HINT:

COMPONENTS: See page 67–1

1. REMOVE INSTRUMENT PANEL ASH RECEPTACLE ASSY
(See page 71–12)

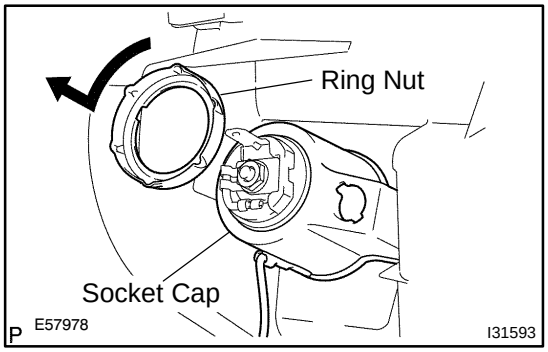

2. REMOVE CIGARETTE LIGHTER ASSY

(a) Rotate the ring nut counterclockwise to remove it.
(b) Remove the cigarette lighter assy from the instrument panel ash receptacle assy.

3. INSTALL CIGARETTE LIGHTER ASSY

(a) Properly position the socket at the cutout of the instrument panel ash receptacle assy and insert them.
(b) Install the socket cap.
(c) Rotate the ring nut clockwise from the backside.

POWER POINT SOCKET ASSY

67098–01

REPLACEMENT

HINT:

COMPONENTS: See page 67–1

1. **REMOVE FLOOR SHIFT SHIFT LEVER KNOB SUB–ASSY(M/T TRANSAXLE) (See page 71–12)**
2. **REMOVE CONSOLE PANEL UPPER REAR (See page 71–12)**
3. **REMOVE INSTRUMENT PANEL CUP HOLDER TRAY(W/O ASHTRAY) (See page 71–12)**
4. **REMOVE INSTRUMENT PANEL ASH RECEPTACLE ASSY(W/ ASHTRAY) (See page 71–12)**
5. **REMOVE CONSOLE PANEL UPPER (See page 71–12)**

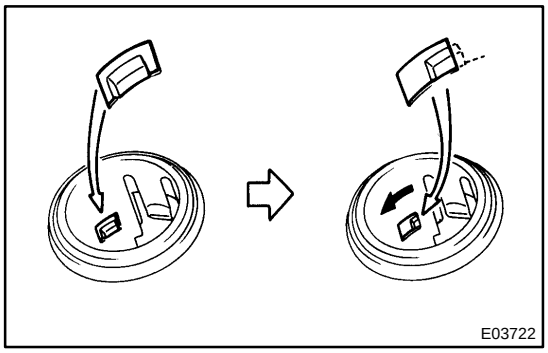

6. REMOVE POWER POINT SOCKET ASSY

(a) Turn the socket in the circumference direction as shown the illustration, disengage the claw between the socket and the power pint socket cover, and push out the socket to the room side.

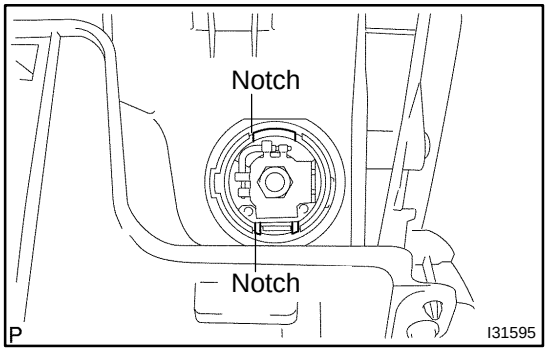

(b) Align the socket with the notch on the power point socket cover, remove the power point socket assy to the room side.

7. INSTALL POWER POINT SOCKET ASSY

(a) Align the socket with the notch on the power point socket cover, push the power point socket assy into as hard as possible and install it.

POWER POINT SOCKET ASSY RR

67095–01

REPLACEMENT

HINT:

COMPONENTS: See page 67–1

1. **REMOVE FLOOR SHIFT SHIFT LEVER KNOB SUB–ASSY(M/T TRANSAXLE) (See page 71–12)**
2. **REMOVE CONSOLE PANEL UPPER REAR (See page 71–12)**
3. **REMOVE CONSOLE BOX CARPET (See page 71–12)**
4. **REMOVE RR CONSOLE BOX(See page 71–12)**

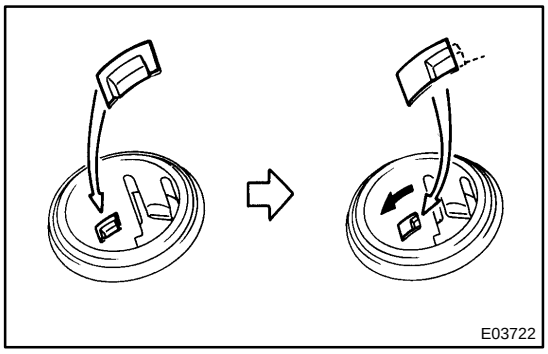

5. REMOVE POWER POINT SOCKET ASSY RR

(a) Remove the clamp.

(b) Turn the socket in the circumference direction as shown the illustration, disengage the claw between the socket and the power outlet socket cover RR, and push out the socket to the room side.

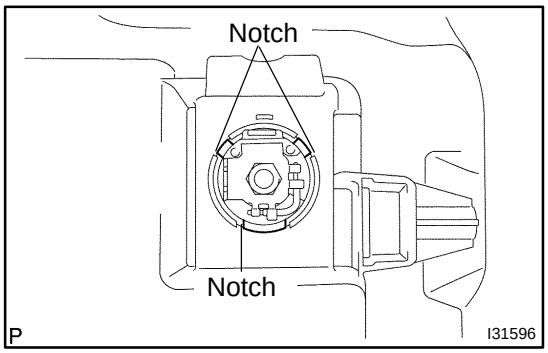

(c) Align the socket with the notch on the power outlet socket cover RR, remove the power point socket assy RR to the room side.

6. INSTALL POWER POINT SOCKET ASSY RR

(a) Align the socket with the notch on the power outlet socket cover RR, push the power point socket assy RR into as hard as possible and install it.

WINDOW GLASS (ANTENNA WIRE)

67094–01

REPAIR

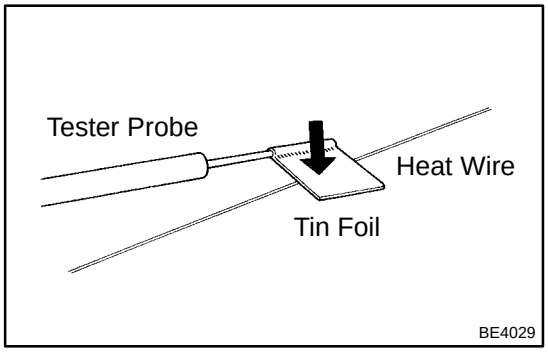

1. INSPECT WINDOW GLASS (ANTENNA WIRE)

NOTICE:

When cleaning the glass, use a soft, dry cloth, and wiper the glass in the direction of the wire. Take care not to damage the wires. Do not use detergents or glass cleaners with abrasive ingredients. When measuring voltage, wind a piece of tin foil around the top of the negative probe and press the foil against the wire with your finger, as shown in the illustration.

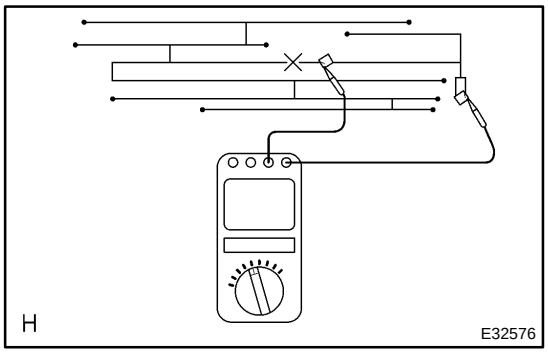

(a) Inspect the continuity, at the center of each antenna wire, as shown in the illustration.

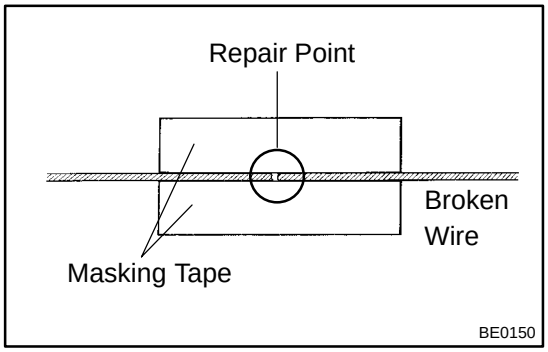

2. REPAIR WINDOW GLASS (ANTENNA WIRE)

(a) Clean the broken wire tips with a grease, wax and silicone remover.

(b) Place the masking tape along both sides of the wire to be repaired.

(c) Thoroughly mix the repair agent (Dupont paste No. 4817).

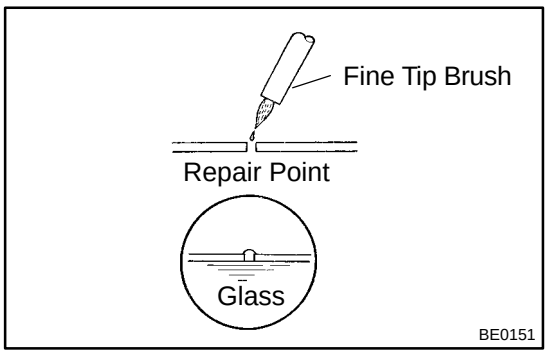

(d) Using a fine tip brush, apply a small amount to the wire.

(e) After a few minutes, remove the masking tape.

(f) Do not repair the defogger wire for at least 24 hours.

POWER SOURCE

LOCATION

6801Z–01

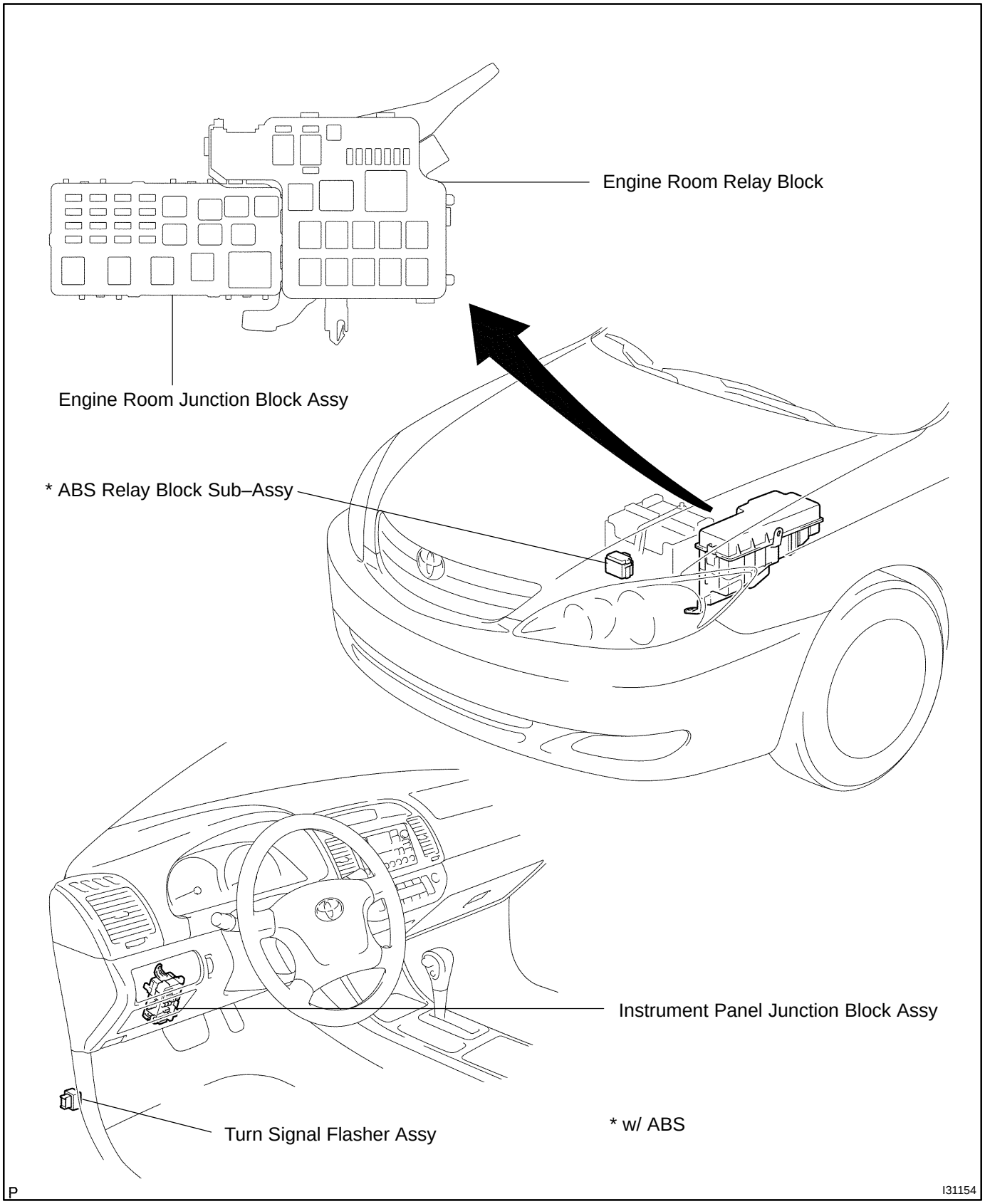

Engine Room Junction Block Assy

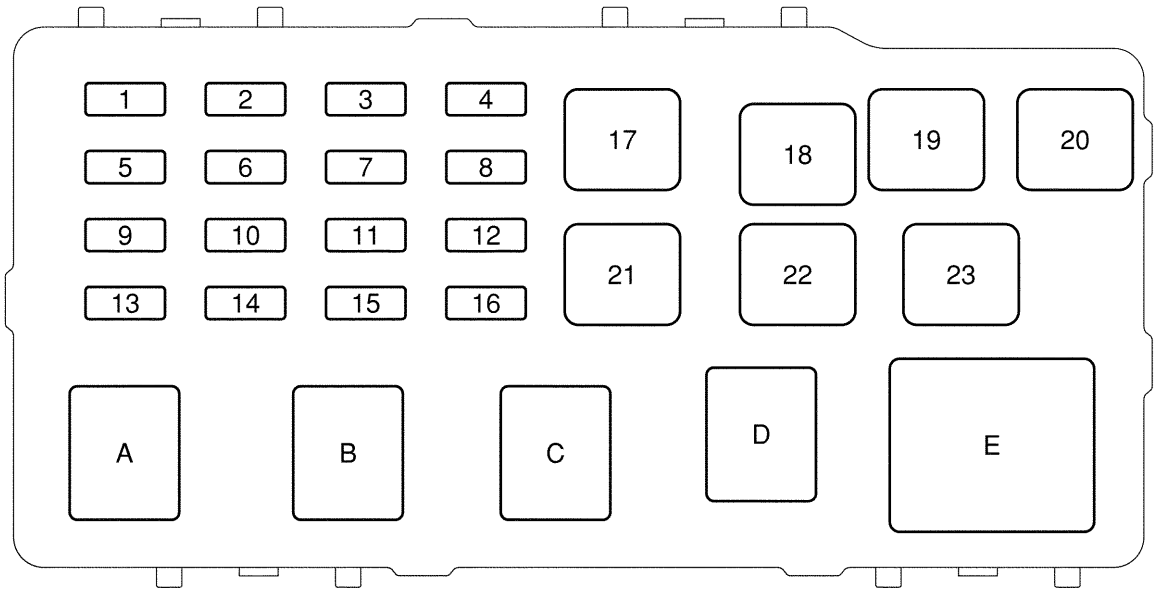

RELAY		FUSE					
A	EFI	1	A/ F	25 A	14	D.C.C	30 A
B	HORN	2	DOOR 1	25 A	15	IG 2	10 A
C	C/ OPN	3	TEL	5 A	16	ST	5 A
D	FAN No. 1	4	AM 2	30 A	17	ADJ PDL	30 A
E	HEAD	5	–		18	CDS	30 A
		6	EFI	20 A	19	ABS No. 2	40 A
		7	ALT–S	5 A	20	MAIN	40 A
		8	HEAD LH UPR	10 A	21	ABS No. 3	40 A
		9	ETCS	10 A	22	HTR	50 A
		10	HORN	10 A	23	RDI	30 A
		11	IGN	15 A			
		12	HEAD RH UPR	10 A			
		13	HAZ	15 A			

P

I31155

Engine Room Relay Block

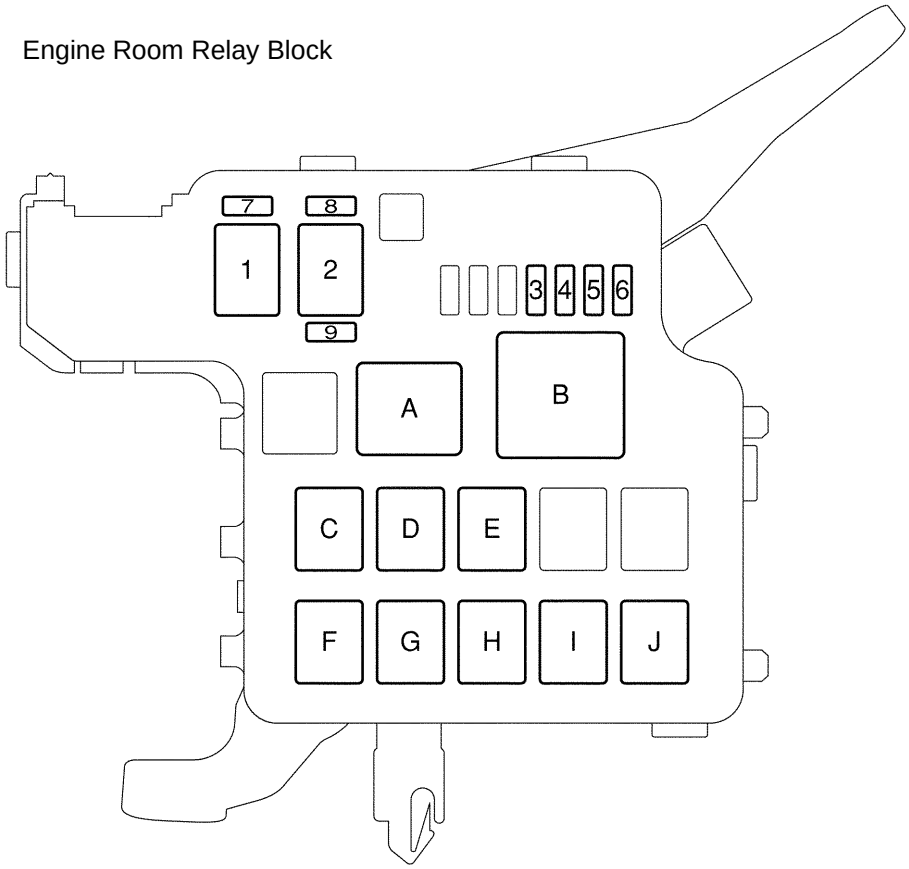

RELAY			FUSE	
A	ST	H FAN No. 3	1 ABS No.1	60 A
B	HTR	I ADJ PDL	2 ALT	100 A (2AZ)
C	FAN No. 2	J DRL No. 4		120 A (1MZ)
D	DRL No. 3		3 A/C	10 A
E	DRL No. 2		4 DRL	5 A
F	A/ F HTR (1MZ)		5 HEAD RH LWR	15 A
G	MG CLT		6 HEAD LH LWR	15 A
			7 SPARE	5 A
			8 SPARE	10 A
			9 SPARE	15 A

ABS Relay Block Sub–Assy

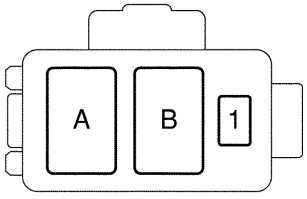

RELAY		FUSE		
A	ABS MTR	1	ABS No. 4	7.5 A
B	ABS SOL			

P

I31156

Instrument Panel Junction Block Assy

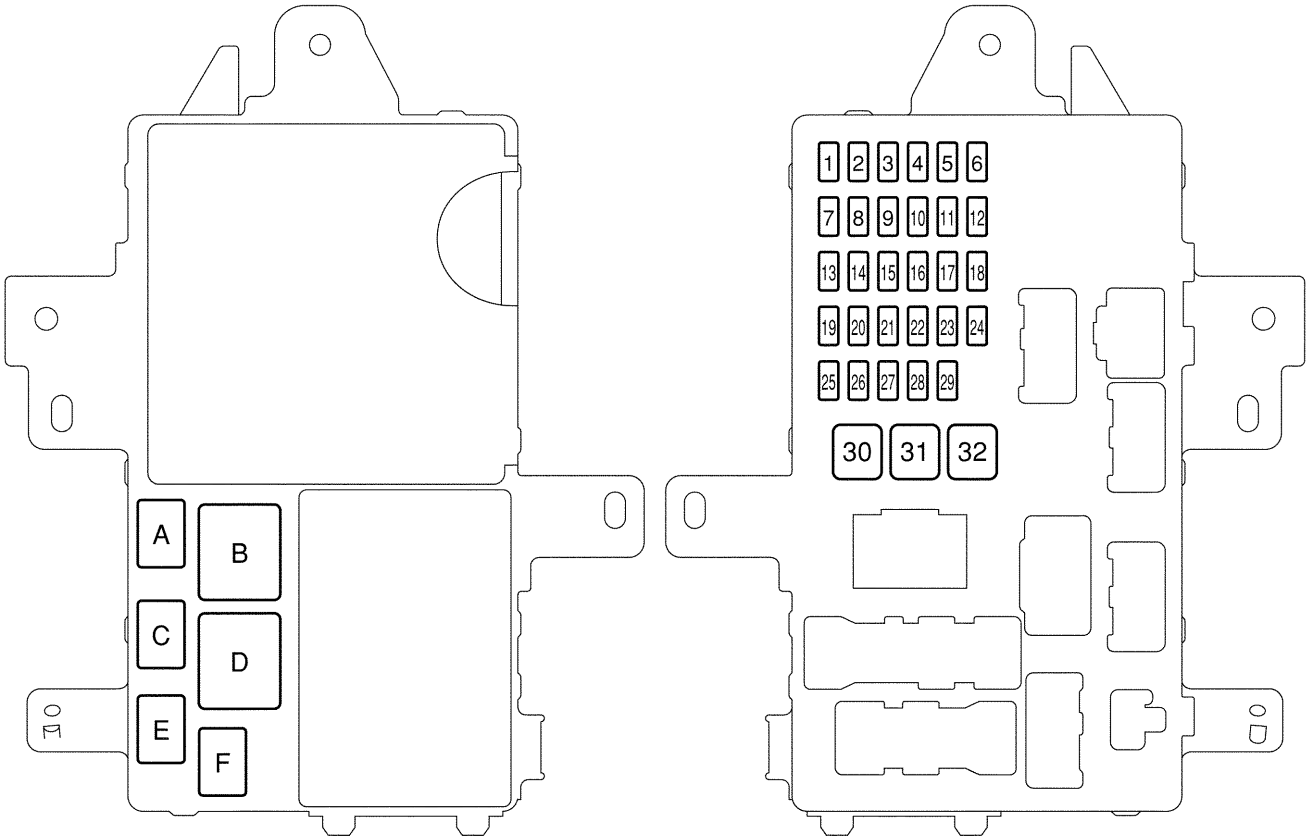

RELAY	FUSE							
A FOG	1 ECU–B	10 A	12 MIR HTR	10 A	23 WASHER	15 A
B RR DEF	2 DOME	7.5 A	13 AM 1	5 A	24 FAN RLY	10 A
C TAIL	3 CIG	15 A	14 FOG	15 A	25 STOP	15 A
D IG 1	4 ECU–ACC	5 A	15 SUN–SHADE	15 A	26 FUEL OPN	5 A
E ACC	5 RAD No. 2	10 A	16 GAUGE 2	10 A	27 DOOR No. 2	25 A
F PWR	6 POWER POINT	15 A	17 PANEL	10 A	28 AMP	25 A
	7 RAD No. 1	20 A	18 TAIL	10 A	29 PWR No. 3	20 A
	8 GAUGE 1	10 A	19 PWR No. 4	20 A	30 PWR SEAT	30 A
	9 ECU–IG	10 A	20 PWR No. 2	20 A	31 PWR No. 1	30 A
	10 WIPER	25 A	21 OBD	7.5 A	32 DEF	40 A
	11 HTR	10 A	22 SEAT HTR	20 A		

P

I31157

HORN SYSTEM

LOCATION

6902K–03

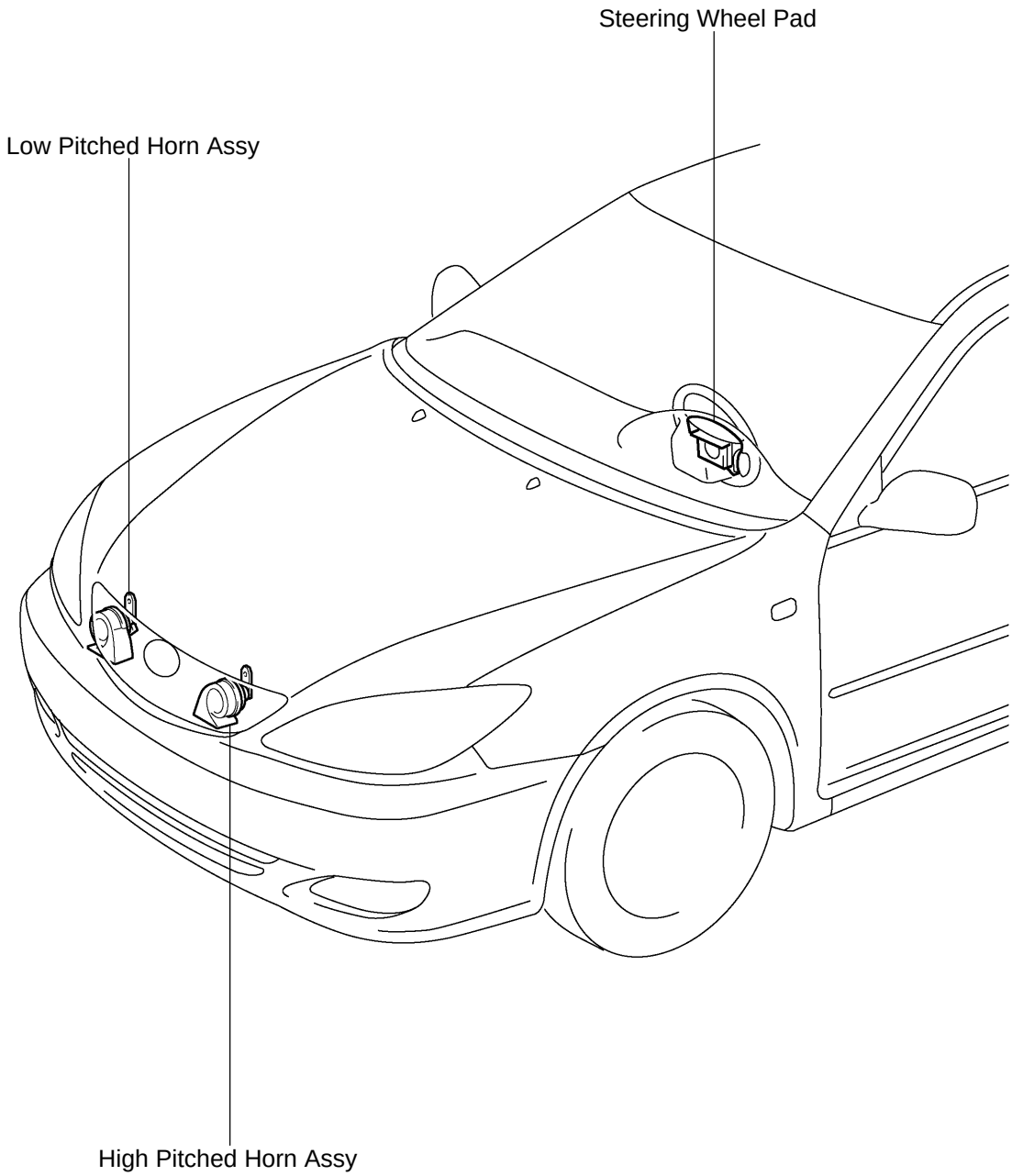

O

B57706

6902L–03

PROBLEM SYMPTOMS TABLE

Symptom	Suspected Area	See page
Horn does not sound	2. Horn button switch	–
	3. High pitched horn	–
	4. Low pitched horn	–
	5. HORN relay	69–3
	6. Wire harness	–

6902M–03

INSPECTION

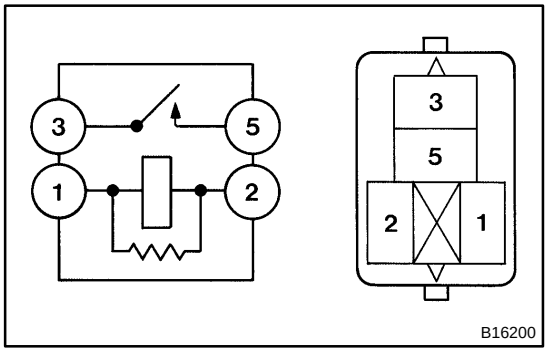

1. INSPECT HORN RELAY ASSY

(a) Inspect the horn relay (Marking: HORN) continuity.

Condition	Tester connection	Specified condition
Constant	1 ⇔ 2	Continuity
Constant	3 ⇔ 5	No continuity
Apply B+ between terminals 1 and 2	3 ⇔ 5	Continuity

If the continuity is not as specified, replace the relay.

LOW PITCHED HORN ASSY

REPLACEMENT

6902N–04

1. REMOVE LOW PITCHED HORN ASSY

(a) Disconnect the connector.

(b) Remove the bolt and the low pitched horn assembly.

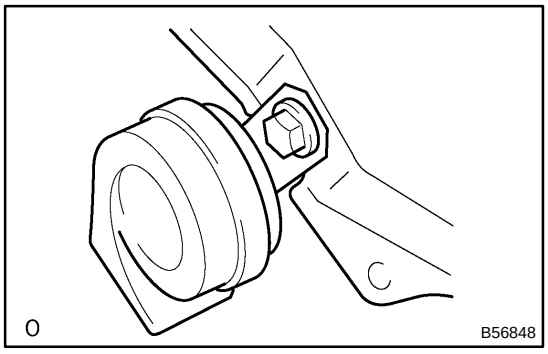

2. INSTALL LOW PITCHED HORN ASSY

(a) Place the stay onto the baffle part in the radiator support upper, and then install the low pitched horn assembly with the bolt.

Torque: 16 – 23 N·m (163 – 235 kgf·cm, 12 – 17 ft·lbf)

(b) Connect the connector.

GARAGE DOOR OPENER SYSTEM

6902S–01

REGISTRATION

1. NEW CODE REGISTRATION

NOTICE:

- **If pressing the switch of the original transmitter to register a code, the system might operate.**
- **When registering the transmitter codes such as for garage, gate or something, check that there is nobody around then register them.**

(a) Press the switch for the item to be registered for 20 seconds.

HINT:

When transferring to the registration mode, LED (red) blinks in 1 Hz cycle.

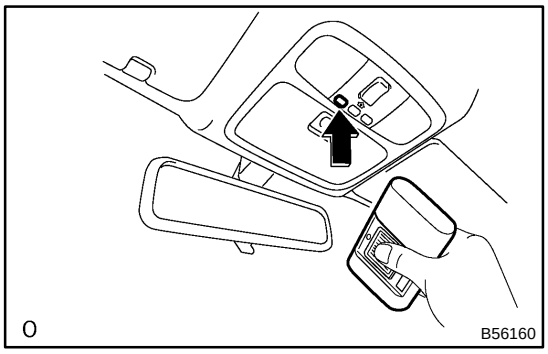

(b) In the condition of step (a), bring the original transmitter within 1–inch area around the garage door opener and press the switch (code transmitting).

HINT:

When code registration is complete correctly, LED (red) blinks in 5.6 Hz cycle.

New code registration timing chart

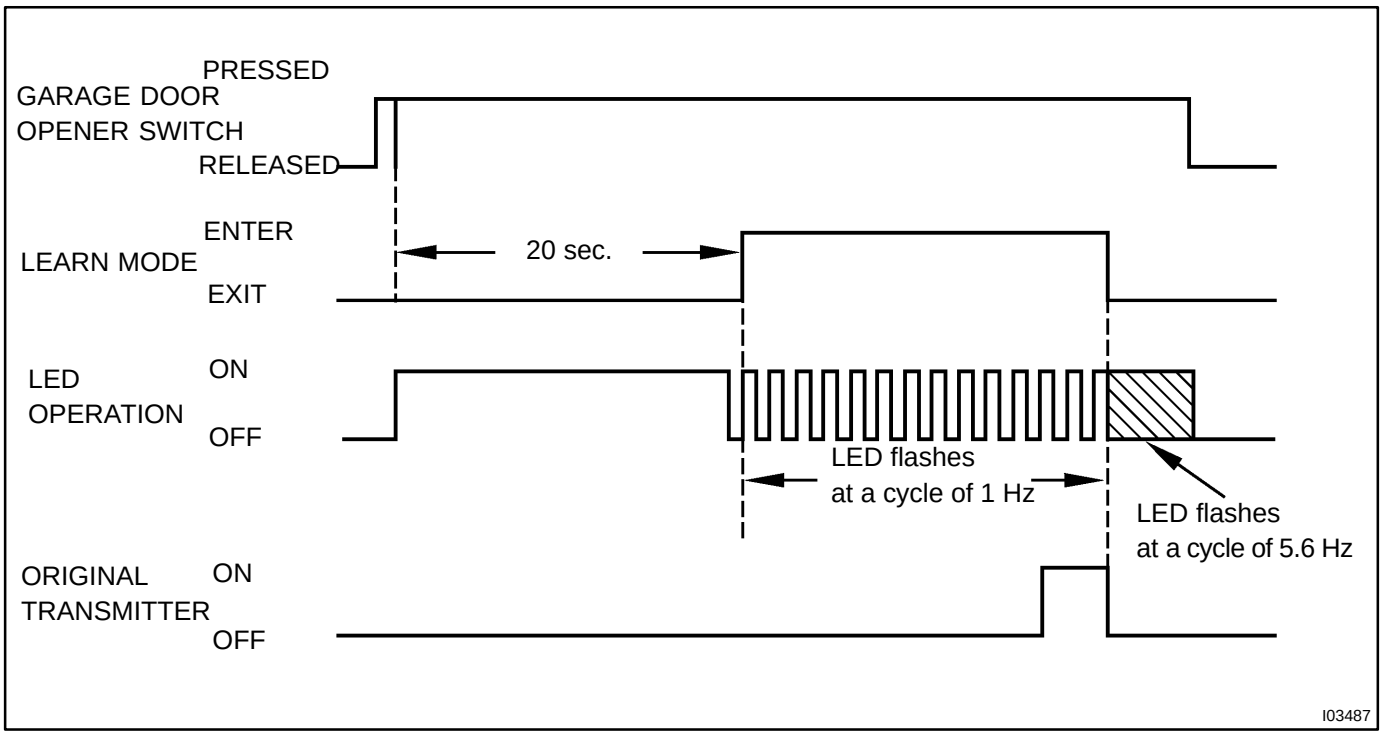

(c) If a code can not be registered, observe the following conditions.

HINT:

- If the battery of original transmitter is consumed.
- Press the switch of the original transmitter repeatedly in the registration mode, as some transmitters stop transmitting for 1 to 2 seconds.
- This system is not applicable to the garage door opener which was made before 1982.

2. CODE DELETION

(a) Press the switches at both ends of the garage door opener simultaneously for 20 seconds.

HINT:

When transferring to the deletion mode, LED (red) blinks in 6 Hz cycle.

(b) When releasing the switch within 10 seconds after transferring to the deletion mode, all the registered codes will be erased.

HINT:

Press the switch until blinking in 6 Hz cycle stops, to set the default code for check.

Code deletion timing chart

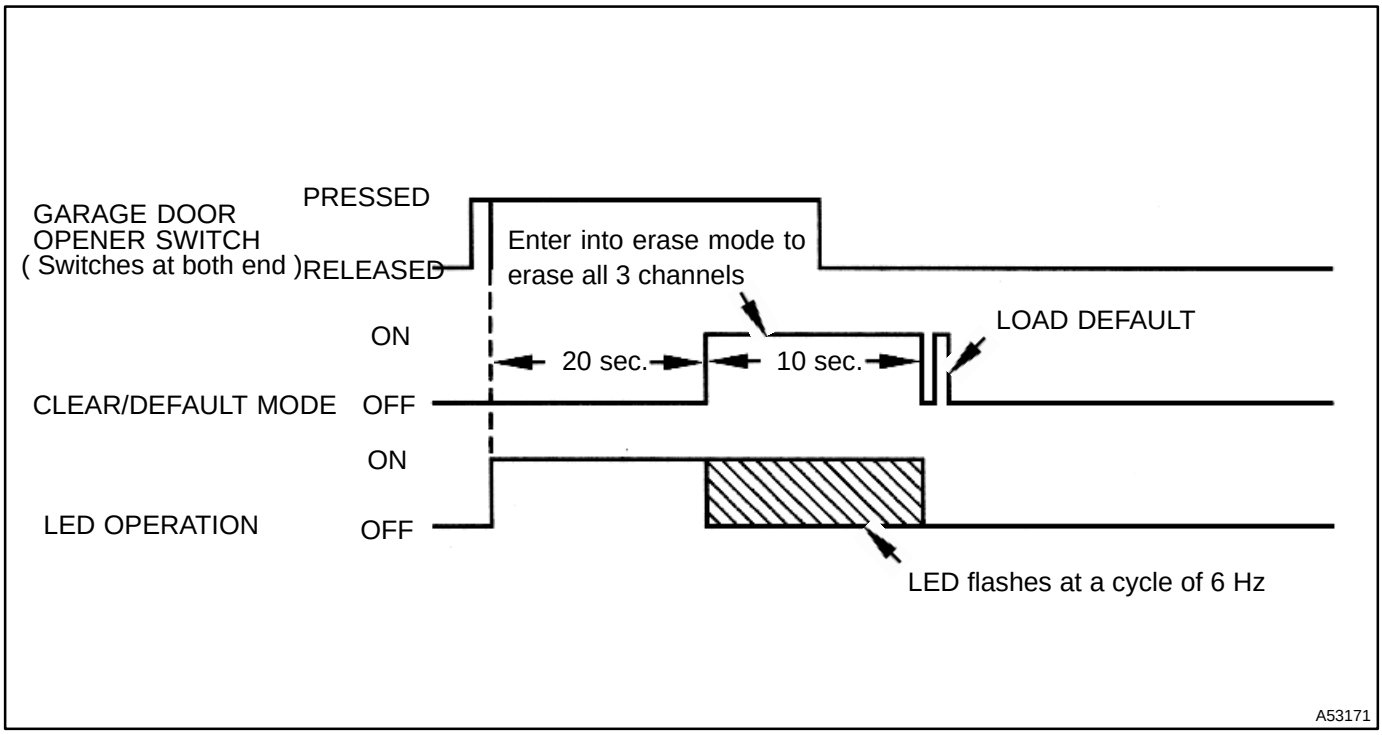

INSPECTION

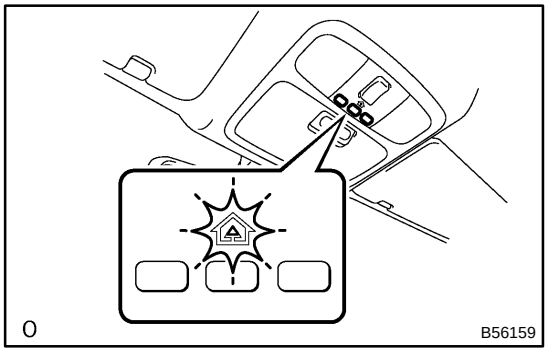

1. INSPECT GARAGE DOOR OPENER

(a) Press the switch and check that each LED (red) lights up. Even if only one switch is found not to light up, replace the garage door opener.

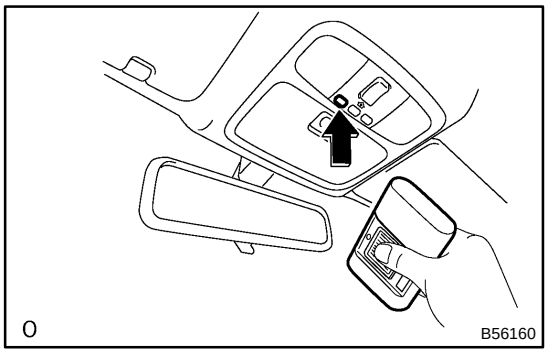

2. INSPECT GARAGE DOOR OPENER REGISTRATION AND TRANSMITTING

HINT:

Use the home link tester made by KENT MORE for this test. Because it is necessary to register the code of the hand–held transmitter, the customer's code should be erased. When the inspection is complete, register the customer's code again.

(a) Check that the code of hand–held transmitter for inspection can be registered.

HINT:

If the code can not be registered, replace the garage door opener.

(b) Press the switch which inspection code has been registered for and check that LED (green) of the home link tester lights up.

HINT:

If the LED (green) does not light up, replace the garage door opener.

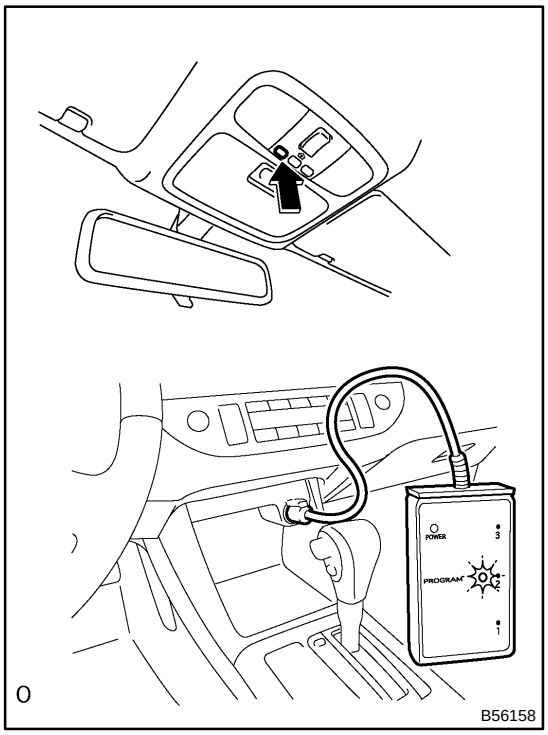

POWER WINDOW CONTROL SYSTEM

700H6–01

ON–VEHICLE INSPECTION

1. CHECK POWER WINDOW (MANUAL OPERATION FUNCTION)

(a) Turn the ignition switch ON.

(b) Check that the door glass will rise when operating the power window regulator master switch to the UP side, and the door glass will go down when operating it to the DOWN side.

(c) Check that the door glass will rise when operating the power window regulator switch of each door to the UP side, and the door glass will go down when operating it to the DOWN side.

(d) Check that the other door glasses than the driver's will not operate when locking the window locking switch.

2. CHECK AUTOMATIC OPERATION FUNCTION

HINT:

For the w/o jam protection models are (a), (b), and (d) only.

(a) Turn the ignition switch ON.

(b) Check that the AUTO UP operates and the door glass is fully closed when each window switch of the regulator master switch assy is turned UP by double shift.

(c) Check that the AUTO DOWN operates and the door glass is fully opened when each window switch of the regulator master switch assy is turned DOWN by double shift.

(d) Check that the door glass stops when the applicable switch is turned UP during the AUTO DOWN operation. (However, if the switch is kept in the UP side, it will transfer to the manual operation.)

(e) Check that the door glass stops when the applicable switch is turned DOWN during the AUTO UP operation. (However, if the switch is kept in the DOWN side, it will transfer to the manual operation.)

3. CHECK JAM PROTECTION FUNCTION (DRIVER'S DOOR GLASS, W/JAM PROTECTION)

(a) Check the basic function.

NOTICE:

- **Never check it with any part of your body such as hand caught between the glass and the vehicle's body. Also, pay thorough attention not to get caught in there during the operation.**
- **In case of resetting the power window motor, check should be carried out after repeating the UP and DOWN operation several times by the AUTO and MANUAL UP operation.**

HINT:

Jam protection function only works during the UP operation.

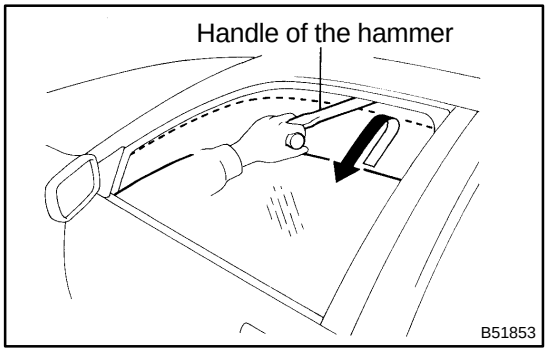

(1) Open the door glass fully.

(2) Set the handle of the hammer near the fully–closed position.

(3) When fully closing the door glass with the AUTO UP and MANUAL UP operation, check that it moves down without the hammer handle getting caught and will go down by about 200 mm (7.87 in.) and stop there.

HINT:

The window goes down by about 50 mm. In case that the opening value is below 200 mm, the window goes down by 200 mm or keeps going down for 5 seconds, and stops then.

(4) During the lowering operation, check that it will not move up even when the window regulator master switch is operated to the UP side.

700H7–01

INSPECTION

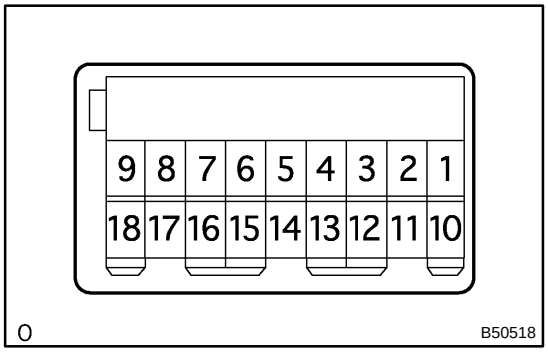

1. INSPECT POWER WINDOW REGULATOR MASTER SWITCH ASSY

(a) Check the continuity between each terminal of the connector.

NOTICE:

Whether the operation is good or bad can be judged by the basic function check, because the continuity cannot be checked by UP/DOWN operation of the driver side switch.

Standard (Window unlock):

Switch position	Passenger Side Terminal No.	Rear RH Terminal No.	Rear LH Terminal No.
UP	6 – 13 *1 (6 – 18 *2), 1 – 15	6 – 18 *1 (6 – 10 *2), 1 – 16	6 – 12, 1 – 10 *1 (1 – 13 *2)
OFF	1 – 13 *1 (1 – 18 *2), 1 – 15	1 – 18 *1 (1 – 10 *2), 1 – 16	6 – 12, 1 – 10 *1 (1 – 12 *2)
DOWN	6 – 15, 1 – 13 *1 (1 – 18 *2)	6 – 16, 1 – 18 *1 (1 – 10 *2)	6 – 10 *1 (6 – 13 *2), 1 – 12

Standard (Window lock):

Switch position	Passenger Side Terminal No.	Rear RH Terminal No.	Rear LH Terminal No.
UP	6 – 13 *1 (6 – 18 *2)	6 – 18 *1 (6 – 10 *2)	6 – 12
OFF	13 – 15 *1 (18 – 15 *2)	16 – 18 *1 (1 – 10 *2)	10 – 12
DOWN	6 – 15	6 – 16	6 – 10 *1 (6 – 13 *2)

*1: w/ Jam protection *2: w/o Jam protection

If the continuity is not as specified, replace the switch.

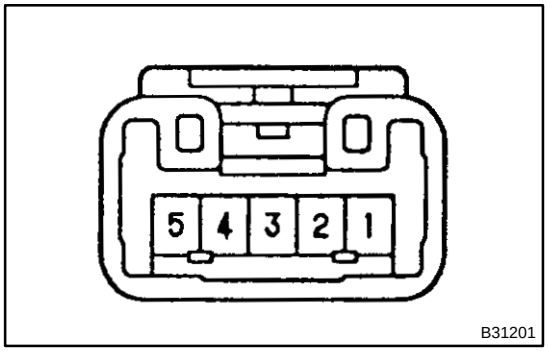

2. INSPECT POWER WINDOW REGULATOR SWITCH ASSY

(a) Check the continuity between each terminal of the connector when operating the switch.

Standard:

Switch position	Terminal No.	Condition
UP	1 – 2 3 – 4	Continuity
OFF	1 – 2 3 – 5	Continuity
DOWN	1 – 4 3 – 5	Continuity

If the continuity is not as specified, replace the switch.

3. INSPECT POWER WINDOW REGULATOR MOTOR ASSY LH

NOTICE:

- **Be sure not to apply the battery voltage to terminal 2, 3 and 6 of the power window regulator motor assy LH connector, because it might damage the pulse sensor and the limit switch.**
- **Be sure to reset the power window regulator motor assembly (initial position setting of the limit switch) when the power window regulator motor assy LH is installed to the regulator (see page 75–8).**

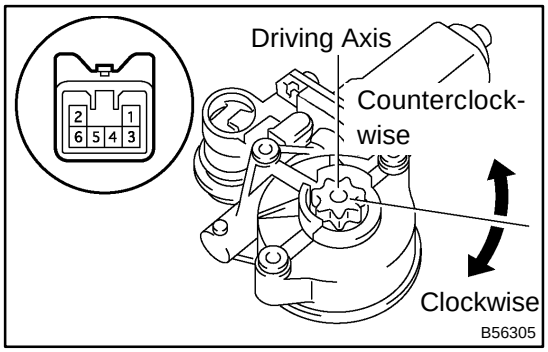

(a) Inspect the operation of the front LH side power window regulator motor assembly.

(1) When adding the battery voltage to each connector terminal, check that the motor operates smoothly.

Standard:

Measuring condition	Operational direction
Battery positive – Terminal 5 Battery negative – Terminal 4	Clockwise rotation toward driving axis
Battery positive – Terminal 4 Battery negative – Terminal 5	Counterclockwise wind rotation toward driving axis

(b) Check the PTC operation inside the power window regulator motor.

NOTICE:

Work must be perform with the power window regulator and door glass installed to the vehicle.

(1) Set the DC 400 A probe to terminal 4 or 5 of the wire harness.

NOTICE:

Match the arrow mark of the probe with the current direction.

(2) Set the door glass at the fully closed position.

(3) When approximately 60 seconds have passed after fully closing the door glass, check how long the current when pressing the power regulator switch UP again (at initial time) takes to change from approximately 16 – 34 A to less than 1 A.

Standard: Approximately 4 – 90 seconds

(4) When approximately 60 seconds have passed after the cutoff checking, check that the door glass will go down when the power regulator switch is pressed DOWN.

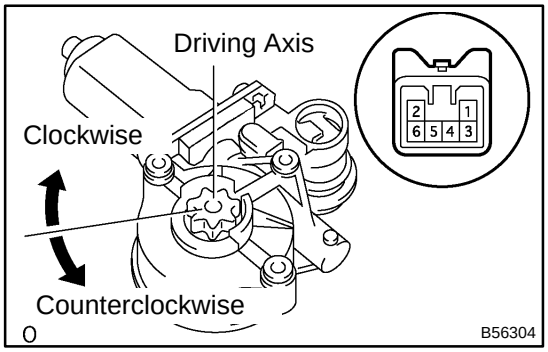

4. INSPECT POWER WINDOW REGULATOR MOTOR ASSY RH

(a) Inspect the operation of the front RH side power window regulator motor assembly.

(1) When adding the battery voltage to each connector terminal, check that the motor operates smoothly.

Standard:

Measuring condition	Operational direction
Battery positive – Terminal 5 Battery negative – Terminal 4	Clockwise rotation toward driving axis
Battery positive – Terminal 4 Battery negative – Terminal 5	Counterclockwise wind rotation toward driving axis

(b) Check the PTC operation inside the power window regulator motor.

NOTICE:

Work must be perform with the power window regulator and door glass installed to the vehicle.

(1) Set the DC 400 A probe to terminal 4 or 5 of the wire harness.

NOTICE:

Match the arrow mark of the probe with the current direction.

(2) Set the door glass at the fully closed position.

(3) When approximately 60 seconds have passed after fully closing the door glass, check how long the current when pressing the power regulator switch UP again (at initial time) takes to change from approximately 16 – 34 A to less than 1 A.

Standard: Approximately 4 – 90 seconds

(4) When approximately 60 seconds have passed after the cutoff checking, check that the door glass will go down when the power regulator switch is pressed DOWN.

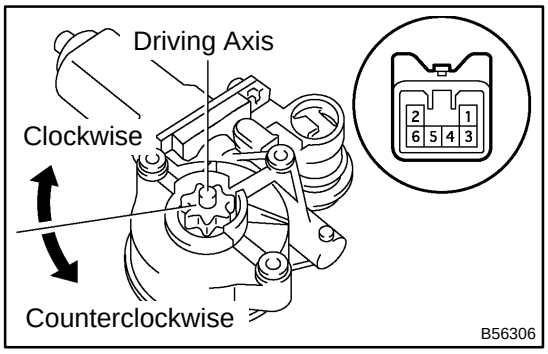

5. INSPECT POWER WINDOW REGULATOR MOTOR ASSY LH

(a) Inspect the operation of the rear LH side power window regulator motor assembly.

(1) When adding the battery voltage to each connector terminal, check that the motor operates smoothly.

Standard:

Measuring condition	Operational direction
Battery positive – Terminal 5 Battery negative – Terminal 4	Clockwise rotation toward driving axis
Battery positive – Terminal 4 Battery negative – Terminal 5	Counterclockwise wind rotation toward driving axis

(b) Check the PTC operation inside the power window regulator motor.

NOTICE:

Work must be perform with the power window regulator and door glass installed to the vehicle.

(1) Set the DC 400 A probe terminal 4 or 5 of the wire harness.

NOTICE:

Match the arrow mark of the probe with the current direction.

(2) Set the door glass at the fully closed position.

(3) When approximately 60 seconds have passed after fully closing the door glass, check how long the current when pressing the power regulator switch UP again (at initial time) takes to change from approximately 16 – 34 A to less than 1 A.

Standard: Approximately 4 – 90 seconds

(4) When approximately 60 seconds have passed after the cutoff checking, check that the door glass will go down when the power regulator switch is pressed DOWN.

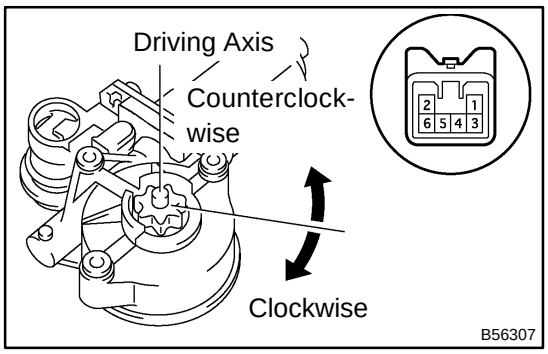

6. INSPECT POWER WINDOW REGULATOR MOTOR ASSY RH

(a) Inspect the operation of the rear RH side power window regulator motor assembly.

(1) When adding the battery voltage to each connector terminal, check that the motor operates smoothly.

Standard:

Measuring condition	Operational direction
Battery positive – Terminal 5 Battery negative – Terminal 4	Clockwise rotation toward driving axis
Battery positive – Terminal 4 Battery negative – Terminal 5	Counterclockwise wind rotation toward driving axis

(b) Check the PTC operation inside the power window regulator motor.

NOTICE:

Work must be perform with the power window regulator and door glass installed to the vehicle.

(1) Set the DC 400 A probe to terminal 4 or 5 of the wire harness.

NOTICE:

Match the arrow mark of the probe with the current direction.

(2) Set the door glass at the fully closed position.

(3) When approximately 60 seconds have passed after fully closing the door glass, check how long the current when pressing the power regulator switch UP again (at initial time) takes to change from approximately 16 – 34 A to less than 1 A.

Standard: Approximately 4 – 90 seconds

(4) When approximately 60 seconds have passed after the cutoff checking, check that the door glass will go down when the power regulator switch is pressed DOWN.

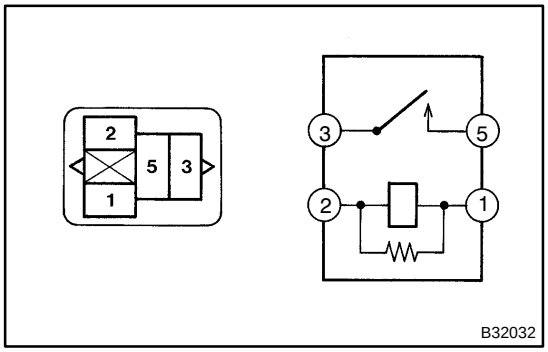

7. INSPECT POWER WINDOW RELAY ASSY

(a) Inspect the power window relay continuity.

Standard:

Terminal No.	Condition	Specified Condition
1 – 2	Constant	Continuity
3 – 5	Constant	No continuity
3 – 5	Apply B + between terminals 1 and 2	Continuity

If the continuity is not as specified, replace the relay.

WINDSHIELD GLASS

COMPONENTS

700AZ–01

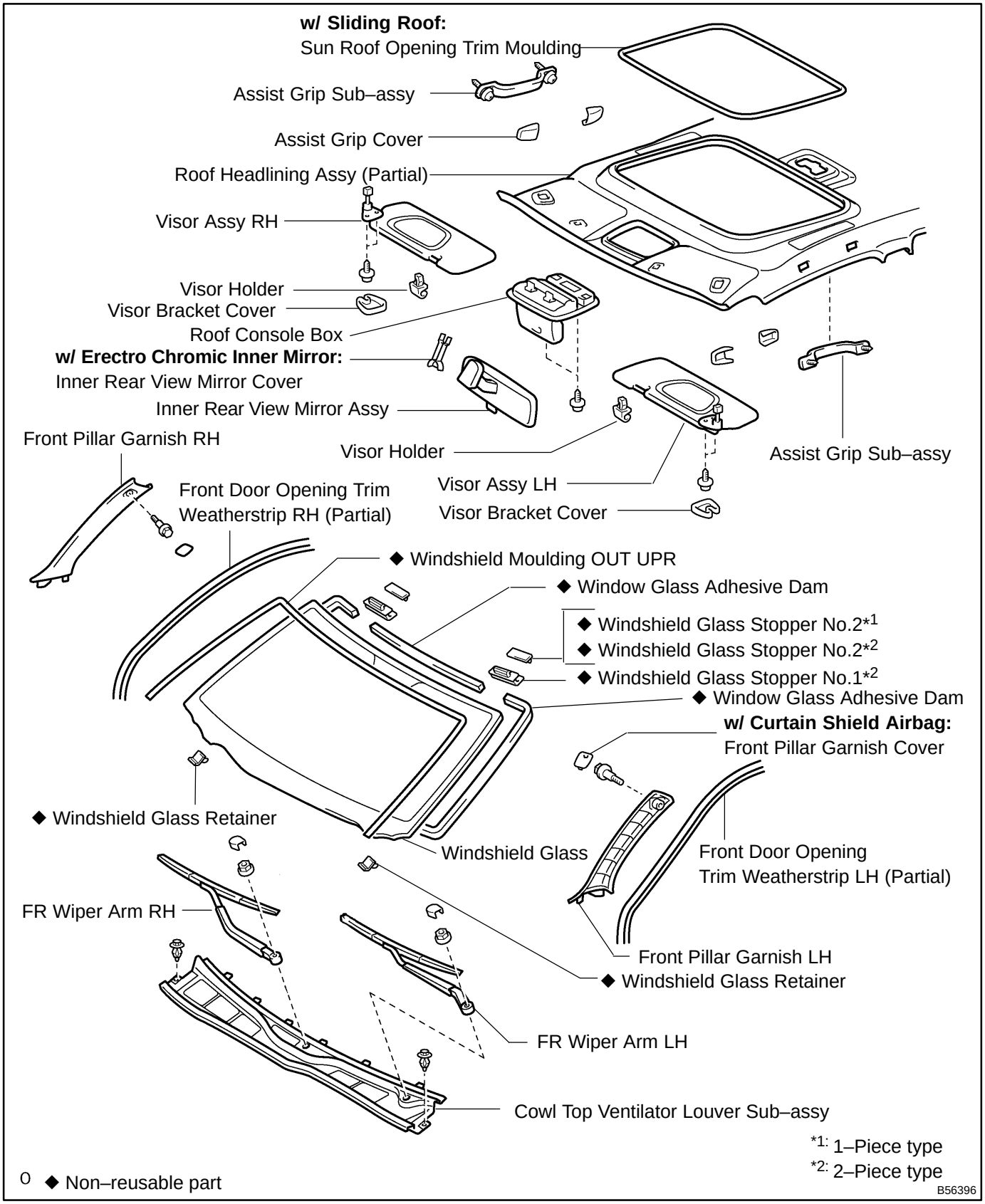

REPLACEMENT

HINT:

Installation is according to the reverse order of the removal.

1. **REMOVE FR WIPER ARM RH**
   (See page 66–6)
2. **REMOVE FR WIPER ARM LH**
   (See page 66–6)
3. **REMOVE COWL TOP VENTILATOR LOUVER SUB–ASSY**
   (See page 66–6)
4. **REMOVE FRONT DOOR OPENING TRIM WEATHERSTRIP RH**
   (See page 66–6)
5. **REMOVE FRONT DOOR OPENING TRIM WEATHERSTRIP LH**
   (See page 66–6)
6. **REMOVE FRONT PILLAR GARNISH RH(W/O CURTAIN SHIELD AIR BAG)**
   (See page 76–20)
7. **REMOVE FRONT PILLAR GARNISH LH(W/O CURTAIN SHIELD AIR BAG)**
   (See page 76–20)
8. **REMOVE FRONT PILLAR GARNISH RH(W/ CURTAIN SHIELD AIR BAG)**
   (See page 76–20)
9. **REMOVE FRONT PILLAR GARNISH LH(W/ CURTAIN SHIELD AIR BAG)**
   (See page 76–20)
10. **REMOVE ROOF CONSOLE BOX ASSY**
    (See page 76–20)
11. **REMOVE RH VISOR ASSY**
    (See page 76–20)
12. **REMOVE LH VISOR ASSY**
    (See page 76–20)
13. **REMOVE VISOR HOLDER**
    (See page 76–20)
14. **REMOVE ROOF HEADLINING ASSY**
    (See page 76–20)
15. **REMOVE INNER REAR VIEW MIRROR ASSY**
    (See page 70–26)

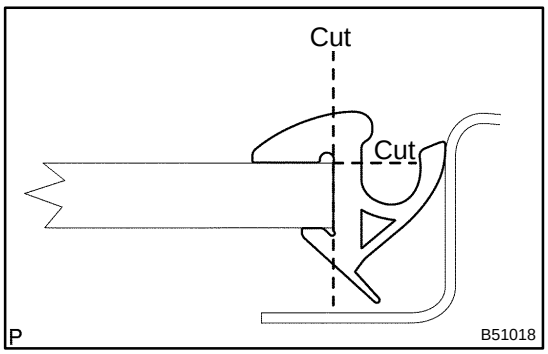

16. **REMOVE WINDSHIELD MOULDING OUTER UPPER**

(a) Using a knife, cut off the moulding as shown in the illustration.

NOTICE:

Do not damage the body with the knife.

(b) Remove the remaining moulding.

HINT:

When removing, make a cut partly, pull and remove it by hand.

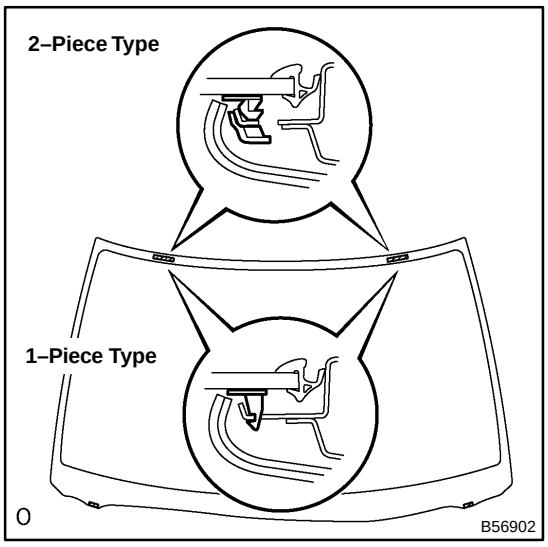

17. REMOVE WINDSHIELD GLASS

HINT:
There is a case where a 1–piece type and a 2–piece type of stoppers are installed in a vehicle type.

(a) Push a piano wire through between the body and glass from the interior.
(b) Apply protective tape to the outer surface to keep the surface from being scratched.

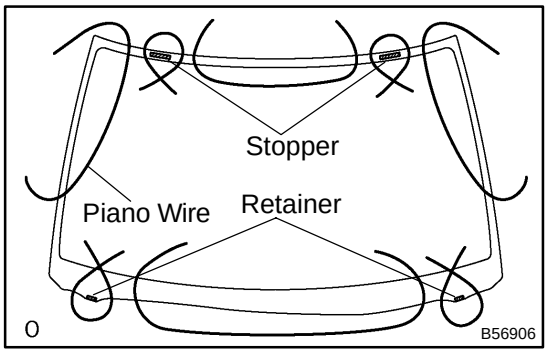

(c) Tie both wire ends to wooden blocks or similar objects.

NOTICE:

- **w/ Curtain shield airbag:**
  When working around the curtain shield airbag,be careful not to damage the airbag.
- **When separating the glass, take care not to damage the paint and interior/exterior ornaments.**
- **To prevent the piano wire to be cut, do not cross it.**

(d) Cut the adhesive by pulling the piano wire around it.
(e) Using a suction rubber, remove the glass.

NOTICE:
Leave as much adhesive on the body as possible when cutting off the glass.

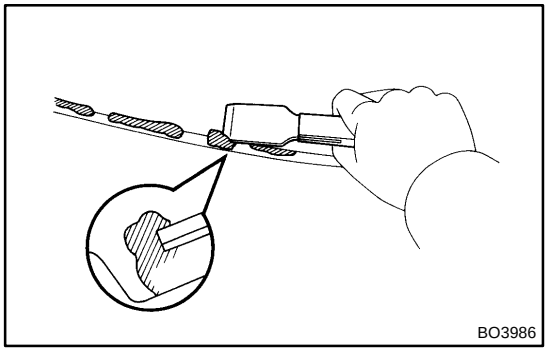

18. CLEAN WINDSHIELD GLASS

(a) Using a scraper, remove the damaged stoppers, dam and adhesive sticking to the glass.
(b) Clean the outer circumference of the glass with white gasoline.

NOTICE:

- **Do not touch the glass after cleaning it.**
- **Be careful not to damage the body.**

19. INSTALL WINDSHIELD GLASS STOPPER NO.1

(a) Install 2 new windshield glass stoppers No.1 to the body.

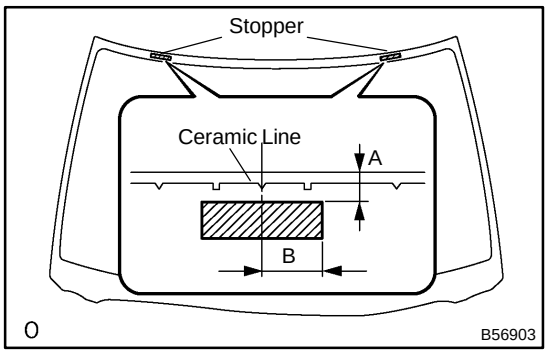

20. INSTALL WINDSHIELD GLASS STOPPER NO.2

(a) Coat the installation part of the stopper with Primer G.

NOTICE:

- **Dry the primer coating dry for 3 minutes or more.**
- **Do not apply too much primer.**

(b) Install 2 new windshield glass stoppers No.2 onto the glass as shown in the illustration.

A: 7.7 mm (0.303 in.)

B: 40.0 mm (1.575 in.)

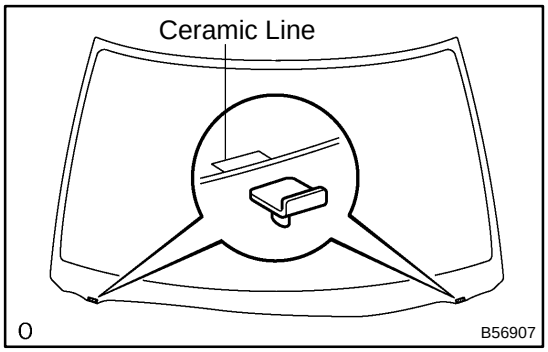

21. INSTALL WINDSHIELD GLASS RETAINER

(a) Install 2 new windshield glass retainers onto the glass as shown in the illustration.

22. INSTALL WINDOW GLASS ADHESIVE DAM

(a) Coat the installation part of the window glass adhesive dam with Primer G.

NOTICE:

- **Let the primer coating dry for 3 minutes or more.**
- **Do not apply too much primer.**

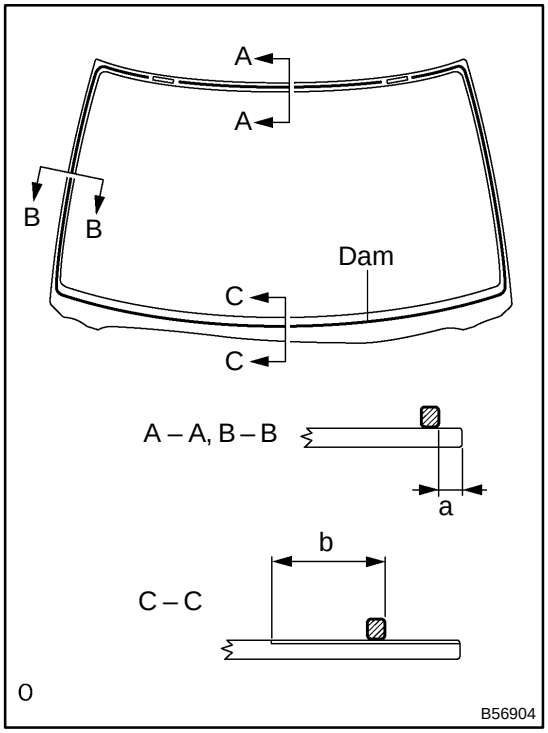

(b) Install a new window glass adhesive dam as shown in the illustration.

a: 7 mm (0.28 in.)

b: 35 mm (1.38 in.)

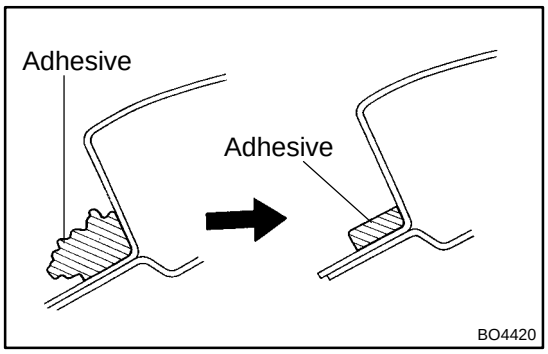

23. INSTALL WINDSHIELD GLASS

(a) Clean and shape the contact surface of the vehicle's body
  (1) Using a knife, cut away any rough areas of the body.

HINT:
Leave as much adhesive on the body as possible.

  (2) Clean the cut surface of the adhesive with a piece of shop rag saturated in cleaner.

(b) Position the glass.
  (1) Using a suction rubber, place the glass in the correct position.
  (2) Check that all the contacting parts of the glass rim are perfectly even.
  (3) Place reference marks between the glass and body.

NOTICE:
Check that the stoppers are attached to the body correctly.

HINT:
When reusing the glass, check and correct the reference mark's positions.

  (4) Remove the glass.

(c) Coat the contact surface of the back door with Primer M.

(d) Using a bursh, coat the exposed part of the contact surface on the vehicle side with Primer M.

NOTICE:
- **Dry the primer coating for 3 minutes or more.**
- **Do not coat the adhesive with Primer M.**
- **Do not apply too much Primer.**

(e) Coat the contact surface of the glass with Primer G.
  (1) Using a brush or sponge, coat the edge of the glass and the contact surface with Primer G.

NOTICE:
- **Dry the primer coating for 3 minutes or more.**
- **Do not apply too much primer.**

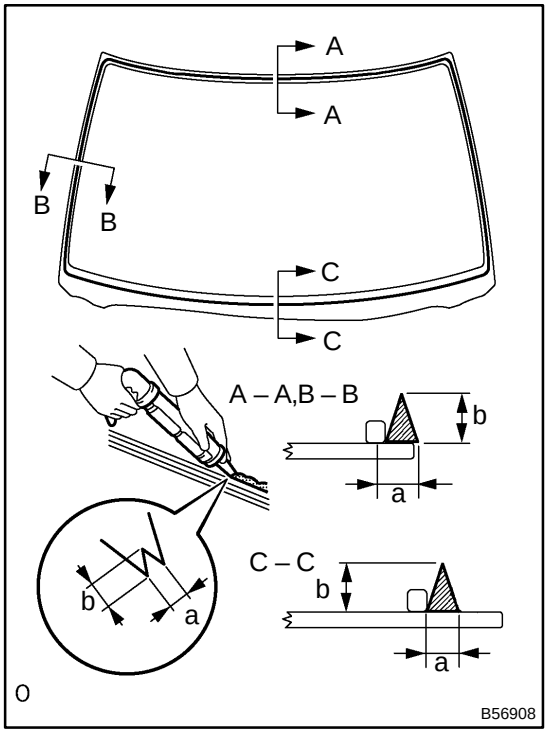

(f) Apply adhesive.
  (1) Cut off the tip of the cartridge nozzle as shown in the illustration.

Part No. 08850–00801 or equivalent

HINT:
After cutting off the tip, use all adhesive within the time described in the table below.

Temperature	Tackfree time
35°C (95°F)	15 minutes
20°C (68°F)	100 minutes
5°C (41°F)	8 hours

  (2) Load the sealer gun with the cartridge.
  (3) Coat the glass with adhesive, as shown in the illustration.

a: 8 mm (0.31 in.)
b: 12 mm (0.47 in.)

(g) Install the glass.

(1) Using a suction rubber, position the glass so that the reference marks are alined, and press it in gently along the rim.

NOTICE:

- **Dry the primer coating for 3 minutes or more.**
- **Check that the stoppers are attached to the body correctly.**
- **Check the clearance between the body and glass.**

(2) Lightly press the glass front surface for close contact.

(3) Using a scraper remove any excess or protruding adhesive.

HINT:

Apply adhesive on the glass rim.

24. INSTALL WINDSHIELD MOULDING OUTER UPPER

(a) Install a new windshield moulding to the windshield glass before the adhesive has hardened.

(b) Hold the windshield glass in place securely with protective tape or equivalent until the adhesive has completely hardened.

(c) Using a scraper, remove any excess or protruding adhesive before the adhesive has hardened.

NOTICE:

Take care not to drive the vehicle during the time described in the table below.

Temperature	Tackfree time
35°C (95°F)	1.5 hours
20°C (68°F)	5 hours
5°C (41°F)	24 hours

25. WATER–LEAK CHECK AND REPAIREMENT

(a) Conduct a leak test after the adhesive has completely hardened.

(b) Seal any leak with sealant.

BACK WINDOW GLASS

COMPONENTS

700B1–01

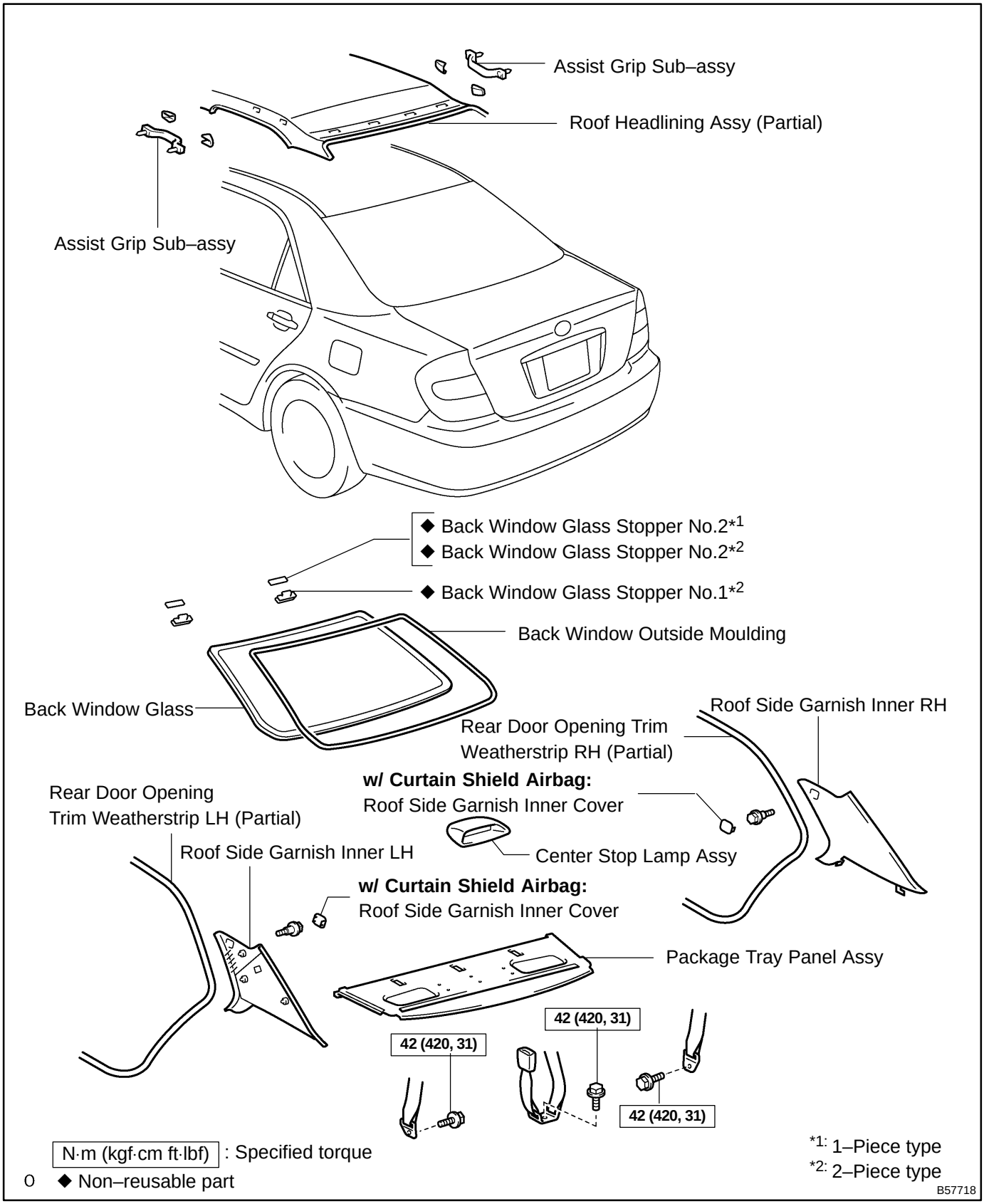

REPLACEMENT

HINT:

Installation is according to the reverse order of the removal.

1. **REMOVE REAR SEAT CUSHION ASSY (See page 72–34, 72–38)**
2. **REMOVE REAR SEAT BACK ASSY (See page 72–34, 72–38)**
3. **REMOVE REAR DOOR OPENING TRIM WEATHERSTRIP RH**
4. **REMOVE REAR DOOR OPENING TRIM WEATHERSTRIP LH**
5. **REMOVE ROOF SIDE GARNISH INNER RH (W/O CURTAIN SHIELD AIR BAG) (See page 76–20)**
6. **REMOVE ROOF SIDE GARNISH INNER LH (W/O CURTAIN SHIELD AIR BAG) (See page 76–20)**
7. **REMOVE ROOF SIDE GARNISH INNER RH (W/ CURTAIN SHIELD AIR BAG) (See page 76–20)**
8. **REMOVE ROOF SIDE GARNISH INNER LH (W/ CURTAIN SHIELD AIR BAG) (See page 76–20)**
9. **REMOVE ROOF HEADLINING ASSY (See page 76–20)**
10. **REMOVE CENTER STOP LAMP ASSY (See page 65–16)**
11. **REMOVE PACKAGE TRAY TRIM PANEL ASSY (See page 61–14, 61–17)**

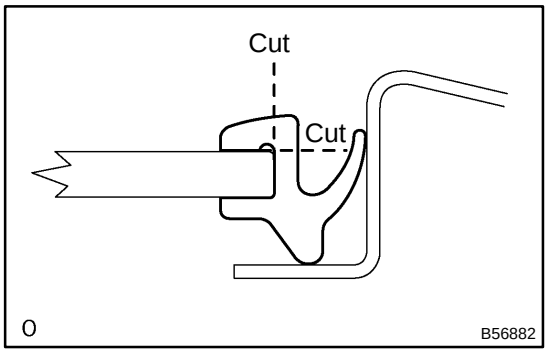

12. REMOVE BACK WINDOW MOULDING OUTSIDE

(a) Using a knife, cut off the moulding as shown in the illustration.

NOTICE:

Do not damage the body with the knife.

(b) Remove the remaining moulding.

HINT:

When removing, make a cut partly, pull and remove it by hand.

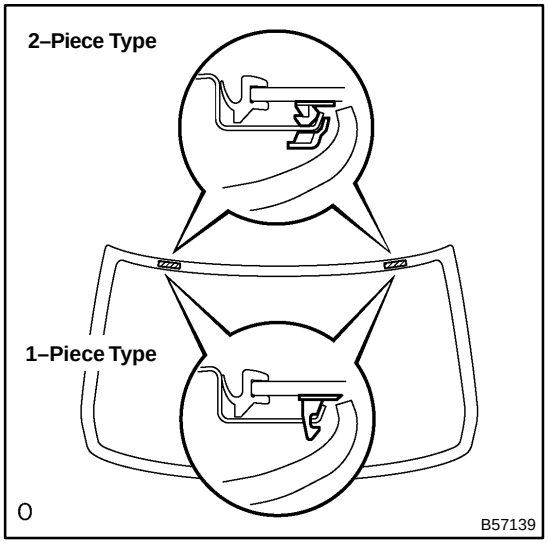

13. REMOVE BACK WINDOW GLASS

HINT:

There is a case where a 1–piece type and a 2–piece type of stoppers are installed in a vehicle type.

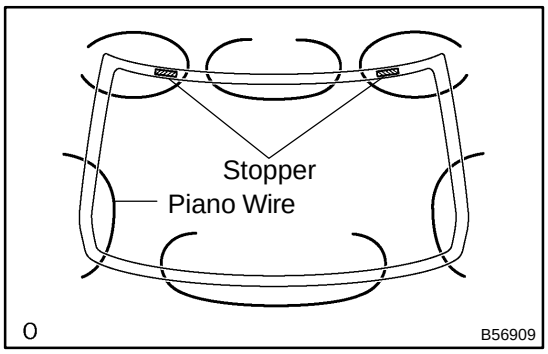

(a) Push a piano wire through between the body and glass from the interior.
(b) Apply protective tape to the outer surface to keep the surface from being scratched.
(c) Tie both wire ends to wooden blocks or similar objects.

NOTICE:

- **When separating the glass, take care not to damage the paint and interior/exterior ornaments.**
- **To prevent the piano wire to be cut, do not cross it.**

(d) Cut the adhesive by pulling the piano wire around it.
(e) Using a suction rubber, remove the glass.

NOTICE:

Leave as much adhesive on the body as possible when cutting off the glass.

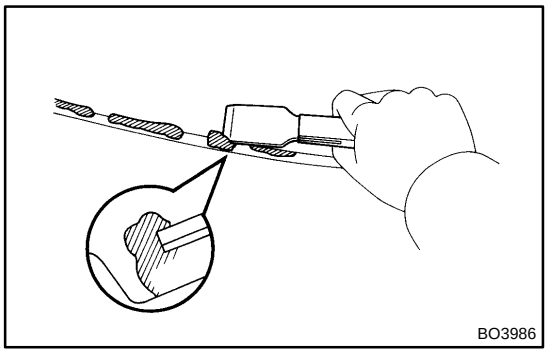

14. CLEAN BACK WINDOW GLASS

(a) Using a scraper, remove the damaged spacers and clips, dam and adhesive sticking to the glass.
(b) Clean the outer circumference of the glass with white gasoline.

NOTICE:

- **Do not touch the glass after cleaning it.**
- **Be careful not to damage the body.**

15. INSTALL BACK WINDOW GLASS STOPPER NO.1

(a) Install 2 new windshield glass stoppers No.1 to the body.

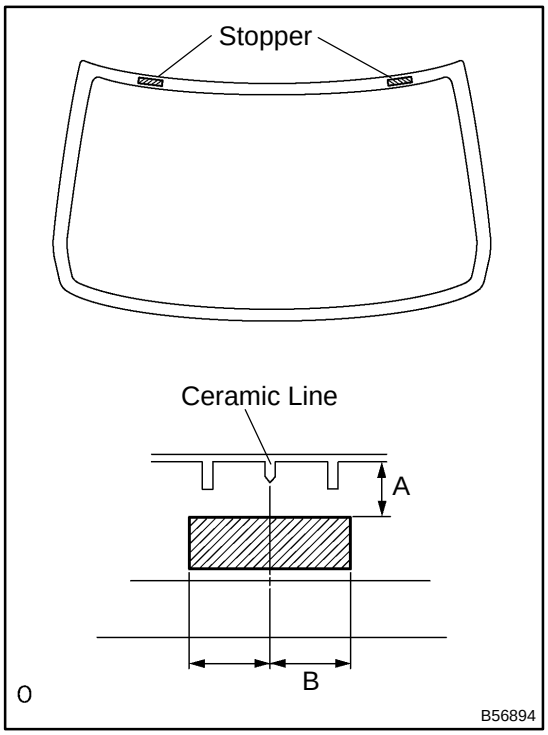

16. INSTALL BACK WINDW GLASS STOPPER NO.2

(a) Coat the installation part of the stopper with Primer G.

NOTICE:

- **Dry the primer coating for 3 minutes or more.**
- **Do not apply too much primer.**

(b) Install 2 new windshield glass stoppers No.2 onto the glass as shown in the illustration..

A: 11.2 mm (0.441 in.)
B: 40 mm (1.57 in.)

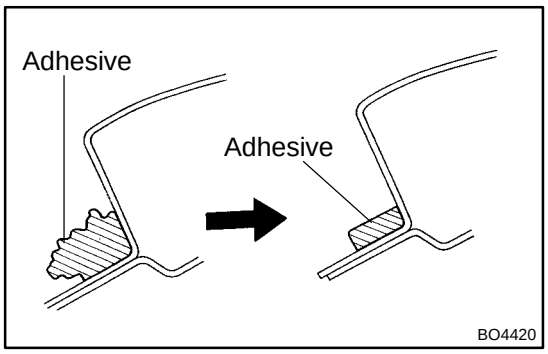

17. INSTALL BACK WINDOW GLASS

(a) Clean and shape the contact surface of the vehicle's body
  (1) Using a knife, cut away any rough areas on the body.

HINT:

Leave as much adhesive on the body as possible.

  (2) Clean the cut surface of the adhesive with a piece of shop rag saturated in cleaner.

(b) Position the glass.
  (1) Using a suction rubber, place the glass in the correct position.
  (2) Check that all the contacting parts of the glass rim are perfectly even.
  (3) Place reference marks between the glass and body.

NOTICE:

Check that the stoppers are attached to the body correctly.

HINT:

When reusing the glass, check and correct the reference mark's positions.

  (4) Remove the glass.

(c) Coat the contact surface of the back door with Primer M.

(d) Using a bursh, coat Primer M to the exposed part of the contact surface on the vehicle side with Primer M.

NOTICE:

- **Dry the primer coating for 3 minutes or more.**
- **Do not coat the adhesive with Primer M.**
- **Do not apply too much Primer.**

(e) Coat the contact surface of the glass with Primer G.
  (1) Using a brush or sponge, coat the edge of the glass and the contact surface with Primer G.

NOTICE:

- **Dry the primer coating for 3 minutes or more.**
- **Do not apply too much primer.**

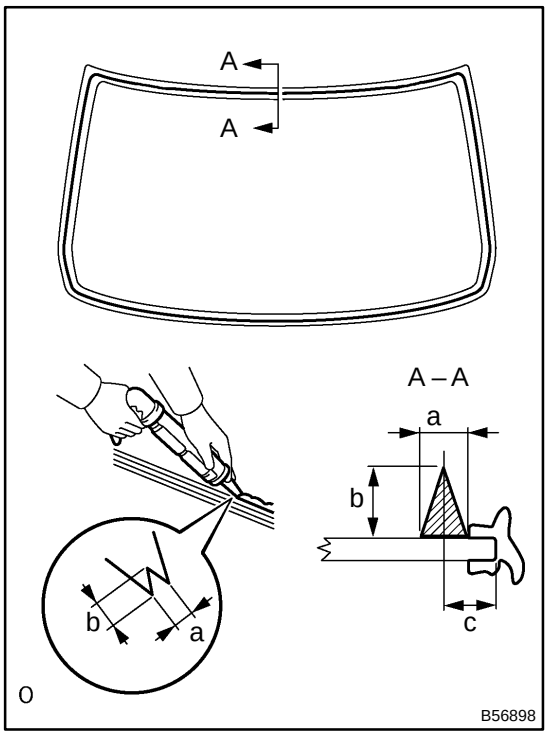

(f) Apply adhesive.

(1) Cut off the tip of the cartridge nozzle as shown in the illustration.

Part No. 08850–00801 or equivalent

HINT:

After cutting off the tip, use all adhesive within the time described in the table below.

Temperature	Tackfree time
35°C (95°F)	15 minutes
20°C (68°F)	100 minutes
5°C (41°F)	8 hours

(2) Load the sealer gun with the cartridge.

(3) Coat the glass with adhesive, as shown in the illustration.

a: 8 mm (0.31 in.)

b: 12 mm (0.47 in.)

c: 6.5 mm (0.256 in.)

(g) Install the glass.

(1) Using a suction rubber, position the glass so that the reference marks are alined, and press it in gently along the rim.

NOTICE:

- **Dry the primer coating for 3 minutes or more.**
- **Check that the stoppers are attached to the body correctly.**
- **Check the clearance between the body and glass.**

(2) Lightly press the glass front surface for close contact.

(3) Using a scraper, remove any excess or protruding adhesive.

HINT:

Apply adhesive on the glass rim.

18. INSTALL BACK WINDOW MOULDING OUTSIDE

(a) Install a new windshield moulding to the windshield glass before the adhesive has hardened.

(b) Hold the windshield glass in place securely with protective tape or equivalent until the adhesive has completely hardened.

(c) Using a scraper, remove any excess or protruding adhesive before the adhesive has hardened.

NOTICE:

Take care not to drive the vehicle during the time described in the table below.

Temperature	Tackfree time
35°C (95°F)	1.5 hours
20°C (68°F)	5 hours
5°C (41°F)	24 hours

19. WATER–LEAK CHECK AND REPAIREMENT

(a) Conduct a leak test after the adhesive has completely hardened.

(b) Seal any leak with sealant.

WINDOW DEFOGGER SYSTEM

700BA–01

LOCATION

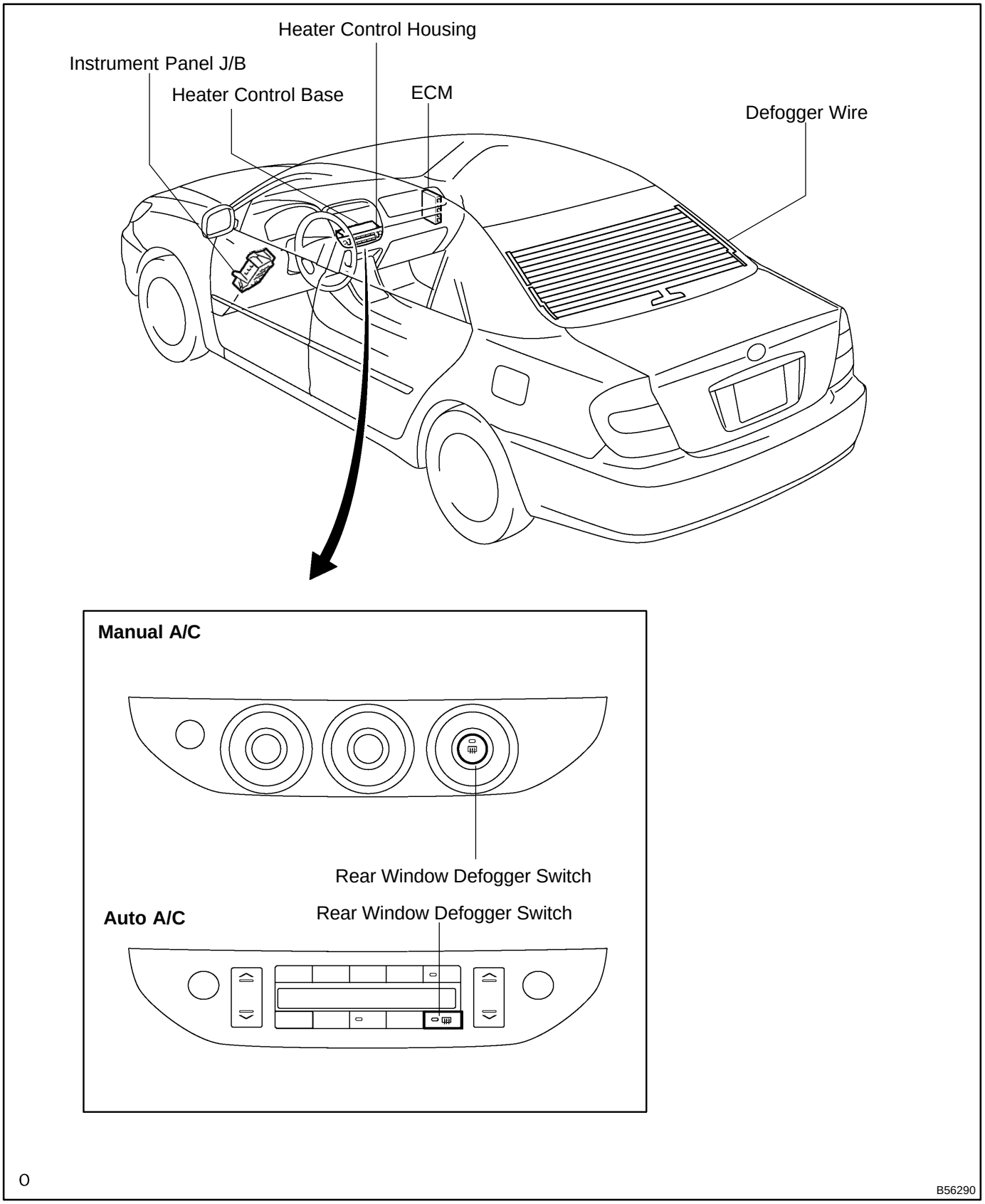

700BB–01

PROBLEM SYMPTOMS TABLE

Symptom	Suspected Area	See page
Rear window defogger does not operate (Indicator lamp on)	1. DEF fuse (Instrument panel J/B) 2. GAUGE 2 fuse (Instrument panel J/B) 3. DEF relay (Instrument panel J/B) 4. Rear window defogger wire 5. Wire harness 6. ECM (2AZ–FE) 7. ECM (1MZ–FE)	68–1 68–1 70–19 05–23 05–199
Rear window defogger does not operate (Indicator lamp off)	1. HTR fuse (Instrument panel J/B) 2. Defogger switch (Heater control housing) 3. Wire harness 4. Heater control base	68–1 05–626 05–626

INSPECTION

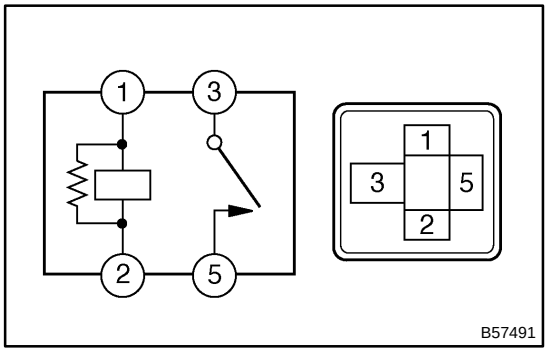

1. INSPECT DEFOGGER RELAY

(a) Inspect the defogger relay (marking: DEF) continuity.
Standard:

Terminal No.	Condition	Specified condition
1 ⇔ 2	Constant	Continuity
3 ⇔ 5	Constant	No continuity
3 ⇔ 5	Apply B+ between terminals 1 and 2	Continuity

If the continuity is not as specified, replace the relay.

POWER MIRROR CONTROL SYSTEM

700BD–01

LOCATION

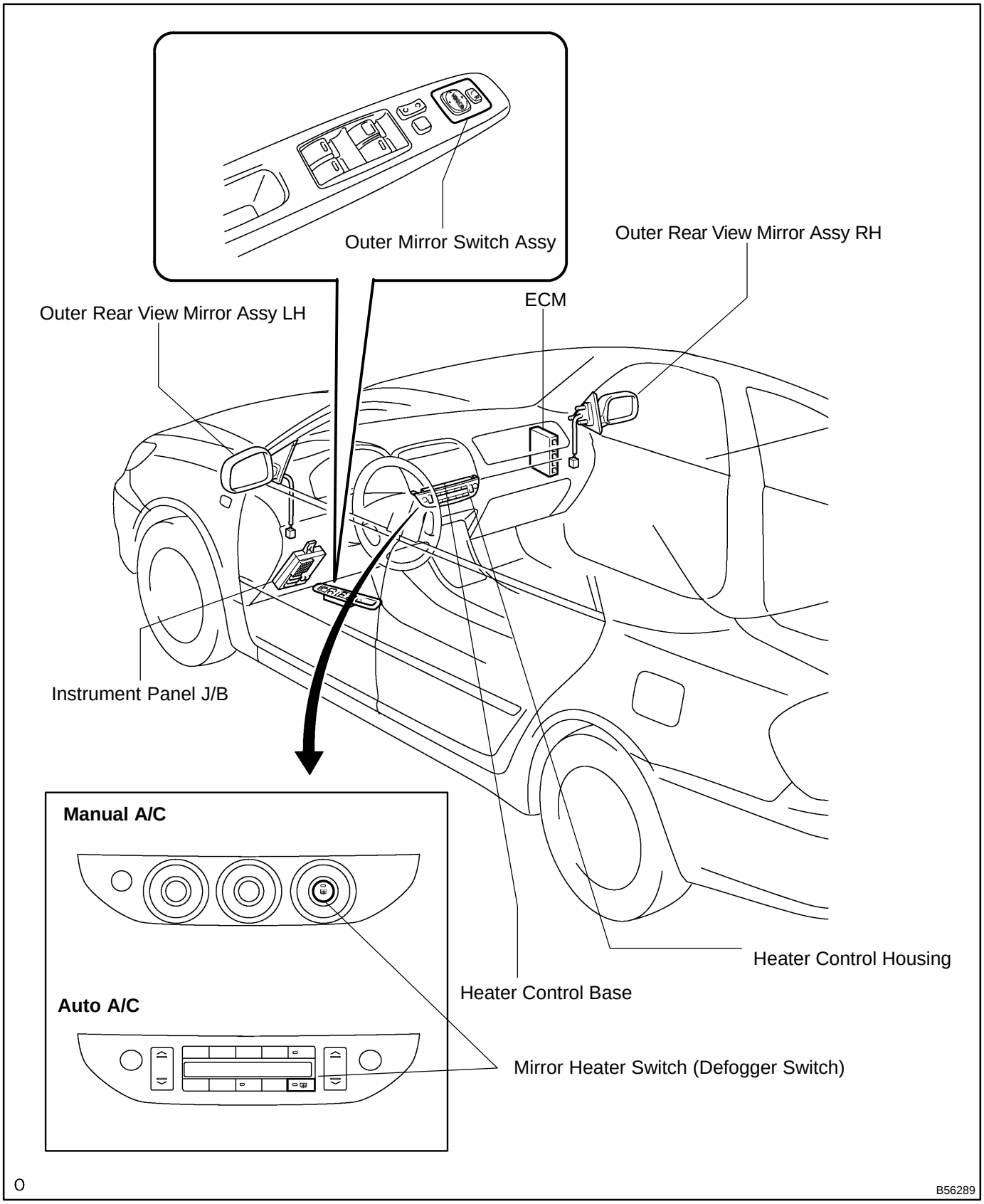

700H5–01

PROBLEM SYMPTOMS TABLE

Symptom	Suspected Area	See page
Mirror does not operate	1. ECU–ACC fuse (Instrument panel J/B)	68–1
	2. Mirror switch	70–22
	3. Mirror motor	70–22
	4. Wire harness	–
Mirror operates abnormally	1. Mirror switch	70–22
	2. Mirror motor	70–22
	3. Wire harness	–

700BE–01

INSPECTION

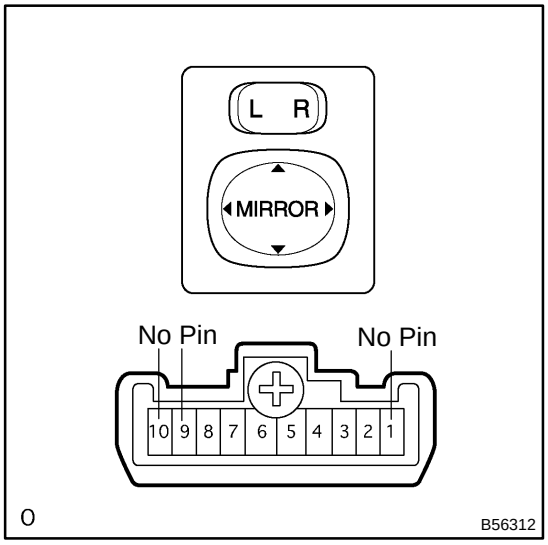

1. INSPECT OUTER MIRROR SWITCH ASSY

(a) Inspect the mirror switch continuity.

(1) Left side for left/right adjustment switch:
Inspect the left side mirror switch continuity.

Standard:

Terminal No.	Switch position	Specified condition
–	OFF	No continuity
4 – 8 6 – 7	UP	Continuity
4 – 7 6 – 8	DOWN	Continuity
5 – 8 6 – 7	LEFT	Continuity
5 – 7 6 – 8	RIGHT	Continuity

If the continuity is not as specified, replace the switch.

(2) Right side for left/right adjustment switch:
Inspect the right side mirror switch continuity.

Standard:

Terminal No.	Switch position	Specified condition
–	OFF	No continuity
3 – 8 6 – 7	UP	Continuity
3 – 7 6 – 8	DOWN	Continuity
2 – 8 6 – 7	LEFT	Continuity
2 – 7 6 – 8	RIGHT	Continuity

If the continuity is not as specified, replace the switch.

TMC Made

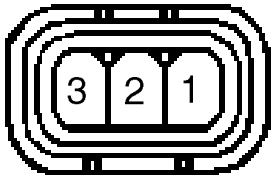

TMMK Made

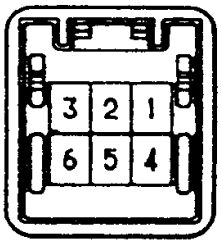

B59988

2. INSPECT OUTER REAR VIEW MIRROR ASSY LH (W/O OUTER MIRROR HEATER)

(a) Inspect the mirror motor operation.

Standard (TMC Made):

Battery connection	Mirror position
Positive (+) – 1 Negative (–) – 2	Turn upward
Positive (+) – 2 Negative (–) – 1	Turn downward
Positive (+) – 3 Negative (–) – 2	Turn left
Positive (+) – 2 Negative (–) – 3	Turn right

Standard (TMMK Made):

Battery connection	Mirror position
Positive (+) – 6 Negative (–) – 2	Turn upward
Positive (+) – 2 Negative (–) – 6	Turn downward
Positive (+) – 3 Negative (–) – 2	Turn left
Positive (+) – 2 Negative (–) – 3	Turn right

If the continuity is not as specified, replace the outer rear view mirror assy LH.

TMC Made

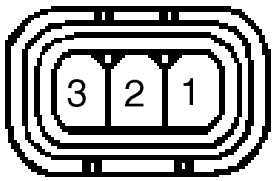

TMMK Made

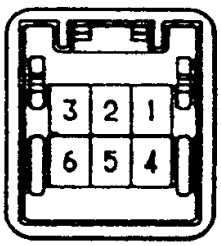

B59988

3. INSPECT OUTER REAR VIEW MIRROR ASSY RH (W/O OUTER MIRROR HEATER)

(a) Inspect the mirror motor operation.

Standard (TMC Made):

Battery connection	Mirror position
Positive (+) – 1 Negative (–) – 2	Turn upward
Positive (+) – 2 Negative (–) – 1	Turn downward
Positive (+) – 3 Negative (–) – 2	Turn left
Positive (+) – 2 Negative (–) – 3	Turn right

Standard (TMMK Made):

Battery connection	Mirror position
Positive (+) – 6 Negative (–) – 2	Turn upward
Positive (+) – 2 Negative (–) – 6	Turn downward
Positive (+) – 3 Negative (–) – 2	Turn left
Positive (+) – 2 Negative (–) – 3	Turn right

If the continuity is not as specified, replace the outer rear view mirror assy RH.

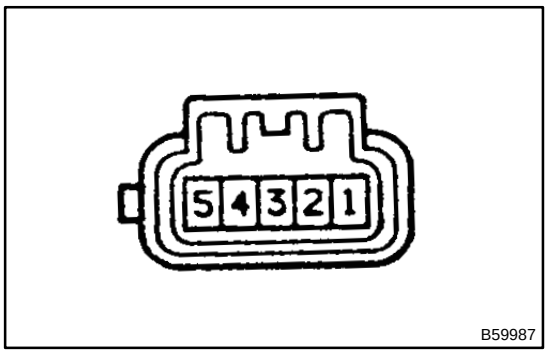

4. INSPECT OUTER REAR VIEW MIRROR ASSY LH (W/ OUTER MIRROR HEATER, TMC MADE)

(a) Inspect the mirror heater operation.

Standard:

Battery connection	Mirror position
Positive (+) – 2 Negative (–) – 3	Turn upward
Positive (+) – 3 Negative (–) – 2	Turn downward
Positive (+) – 4 Negative (–) – 3	Turn left
Positive (+) – 3 Negative (–) – 4	Turn right

If the continuity is not as specified, replace the outer rear view mirror assy LH.

(1) Check the resistance between terminals 1 and 5 of the connector.

Resistance: 4.0 – 5.4 Ω

(2) Check that the mirror is heated up when connecting the battery positive (+) to terminal 4 and the battery negative (–) to terminal 5 of the connector.

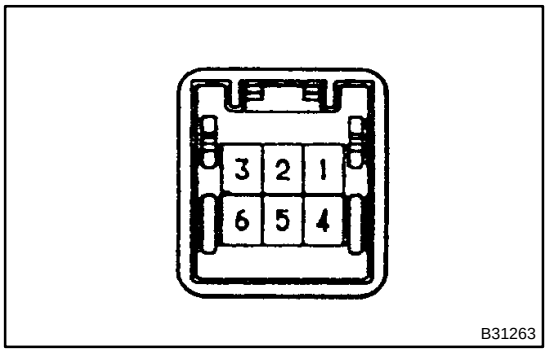

5. INSPECT OUTER REAR VIEW MIRROR ASSY LH (W/ OUTER MIRROR HEATER, TMMK MADE)

(a) Inspect the mirror motor operation.

Standard:

Battery connection	Mirror position
Positive (+) – 6 Negative (–) – 2	Turn upward
Positive (+) – 2 Negative (–) – 6	Turn downward
Positive (+) – 3 Negative (–) – 2	Turn left
Positive (+) – 2 Negative (–) – 3	Turn right

If the continuity is not as specified, replace the outer rear view mirror assy LH.

(b) Inspect the mirror heater operation.

(1) Check the resistance between terminals 1 and 4 of the connector.

Resistance: 4.0 – 5.4 Ω

(2) Check that the mirror is heated up when connecting the battery positive (+) to terminal 4 and the battery negative (–) to terminal 5 of the connector.

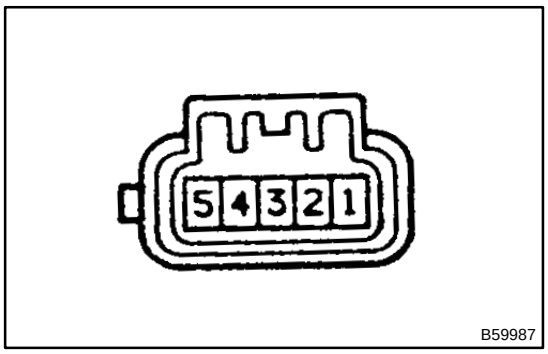

6. INSPECT OUTER REAR VIEW MIRROR ASSY RH (W/ OUTER MIRROR HEATER, TMC MADE)

(a) Inspect the mirror motor operation.

Standard:

Battery connection	Mirror position
Positive (+) – 2 Negative (–) – 3	Turn upward
Positive (+) – 3 Negative (–) – 2	Turn downward
Positive (+) – 4 Negative (–) – 3	Turn left
Positive (+) – 3 Negative (–) – 4	Turn right

If the continuity is not as specified, replace the outer rear view mirror assy RH.

(b) Check the mirror heater operation.

(1) Check the resistance between terminals 1 and 5 of the connector.

Resistance: 4.0 – 5.4 Ω

(2) Check that the mirror is heated up when connecting the battery positive (+) to terminal 4 and the battery negative (–) to terminal 5 of the connector.

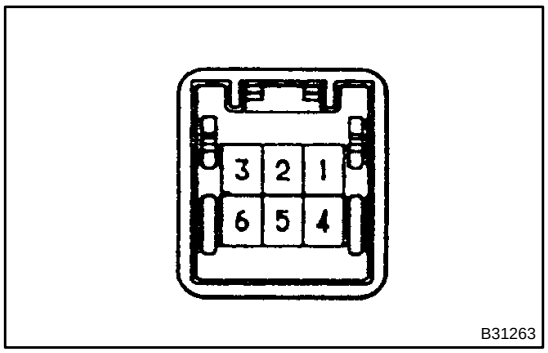

7. INSPECT OUTER REAR VIEW MIRROR ASSY RH (W/ OUTER MIRROR HEATER, TMMK MADE)

(a) Inspect the mirror motor operation.

Standard:

Battery connection	Mirror position
Positive (+) – 6 Negative (–) – 2	Turn upward
Positive (+) – 2 Negative (–) – 6	Turn downward
Positive (+) – 3 Negative (–) – 2	Turn left
Positive (+) – 2 Negative (–) – 3	Turn right

If the continuity is not as specified, replace the outer rear view mirror assy RH.

(b) Check the mirror heater operation.

(1) Check the resistance between terminals 1 and 4 of the connector.

Resistance: 4.0 – 5.4 Ω

(2) Check that the mirror is heated up when connecting the battery positive (+) to terminal 4 and the battery negative (–) to terminal 5 of the connector.

INNER REAR VIEW MIRROR ASSY

700B3–01

REPLACEMENT

HINT:
Installation is according to the reverse order of the removal.

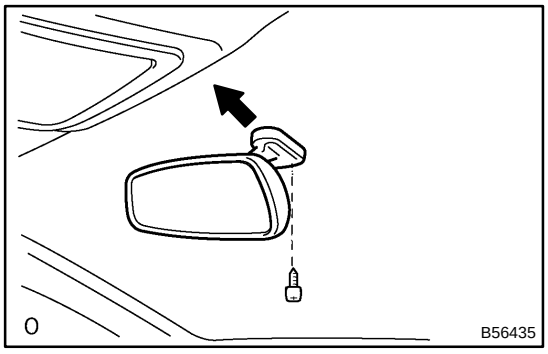

1. REMOVE INNER REAR VIEW MIRROR ASSY

(a) Remove the screw.
(b) w/ Erectro chromic inner mirror:
Remove the inner rear view mirror cover.
(c) w/ Erectro chromic inner mirror:
Disconnect the connector.
(d) Remove the rear view inner mirror assembly.

PRE–CHECK

1. SELECTING COMPASS DISPLAY MODE

(a) The comp switch allows you to select a Display or Non–display mode of the compass.

2. SETTING ZONE

(a) Deviation between the ”magnetic north” and ”actual north” differs depending on the location. Therefore, adjustment of the magnetism is required. Since the magnetic condition differs according to the area where the vehicle is used, it is necessary for each user to set the zone. (Refer to ”Compass Zone Map”). The zone setting can be changed using the comp switch of the inner mirror.

3. PERFORMING CALIBRATION

(a) Because each vehicle has its own magnetic field, calibration should be performed for each vehicle. This compass function is used when storing the record of the vehicle’s magnetic field.

4. WHEN COMPASS MAGNETIZED:

(a) A compass could be magnetized during shipping by vessels or freight cars. Before delivery, therefore, make sure to perform calibration and ensure that calibration is done properly. If it cannot be done (cannot be complete in spite of driving around several times), it may be caused by magnetization. Demagnetize the vehicle using a demagnetizer and perform calibration again.

5. SETTING COMPASS

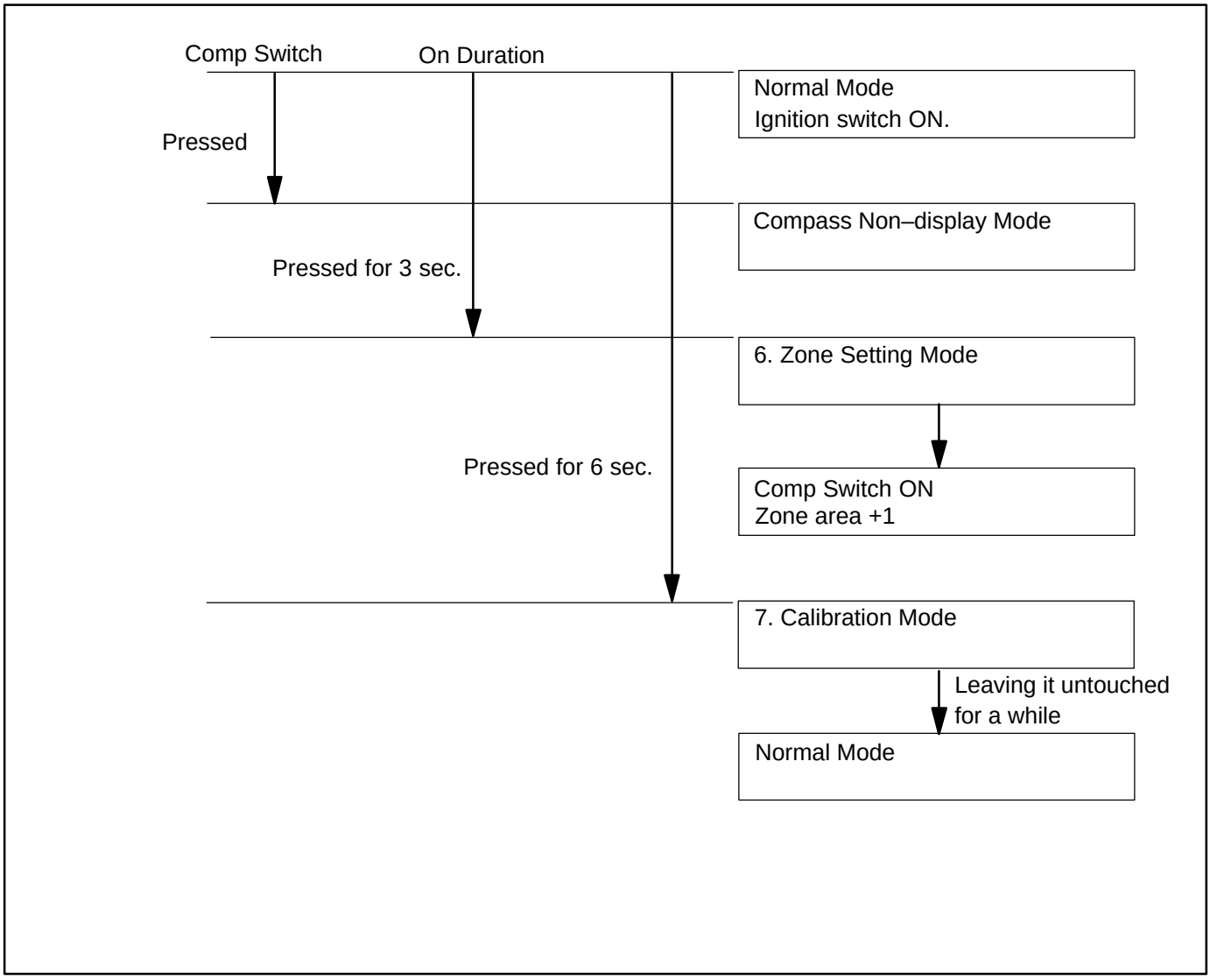

6. ZONE SETTING MODE

(a) Pressing the comp switch for 3 seconds. Inthe normal mode will activate the zone setting mode. A number (1–15) is displayed on the compass display.

HINT:

In the initial status, ”8” is displayed.

(b) The displayed number increases +1 every time the comp switch is pressed. Referring to the map, check the number for the area where the vehicle will be used and set the zone number.

(c) Leave it untouched for several seconds after setting and check that the compass display shows an azimuthal direction (N, NE, E, SE, S, SW, W or NW) or ”C”.

7. CALIBRATION SETTING MODE

(a) Pressing the comp switch for 6 seconds. in the normal mode will also activate this mode.

(b) Drive the vehicle at a slow speed of 8 km/h (5 MPH)or less in the circular direction.

(c) Driving around the circle 1 to 3 times will display the azimuthal direction on the display, completing the calibration.

HINT:

Once calibration is complete, it is not necessary to perform the above procedures unless the magnetic field strength is drastically changed. If this happens, the azimuthal display will be changed to ”C”.

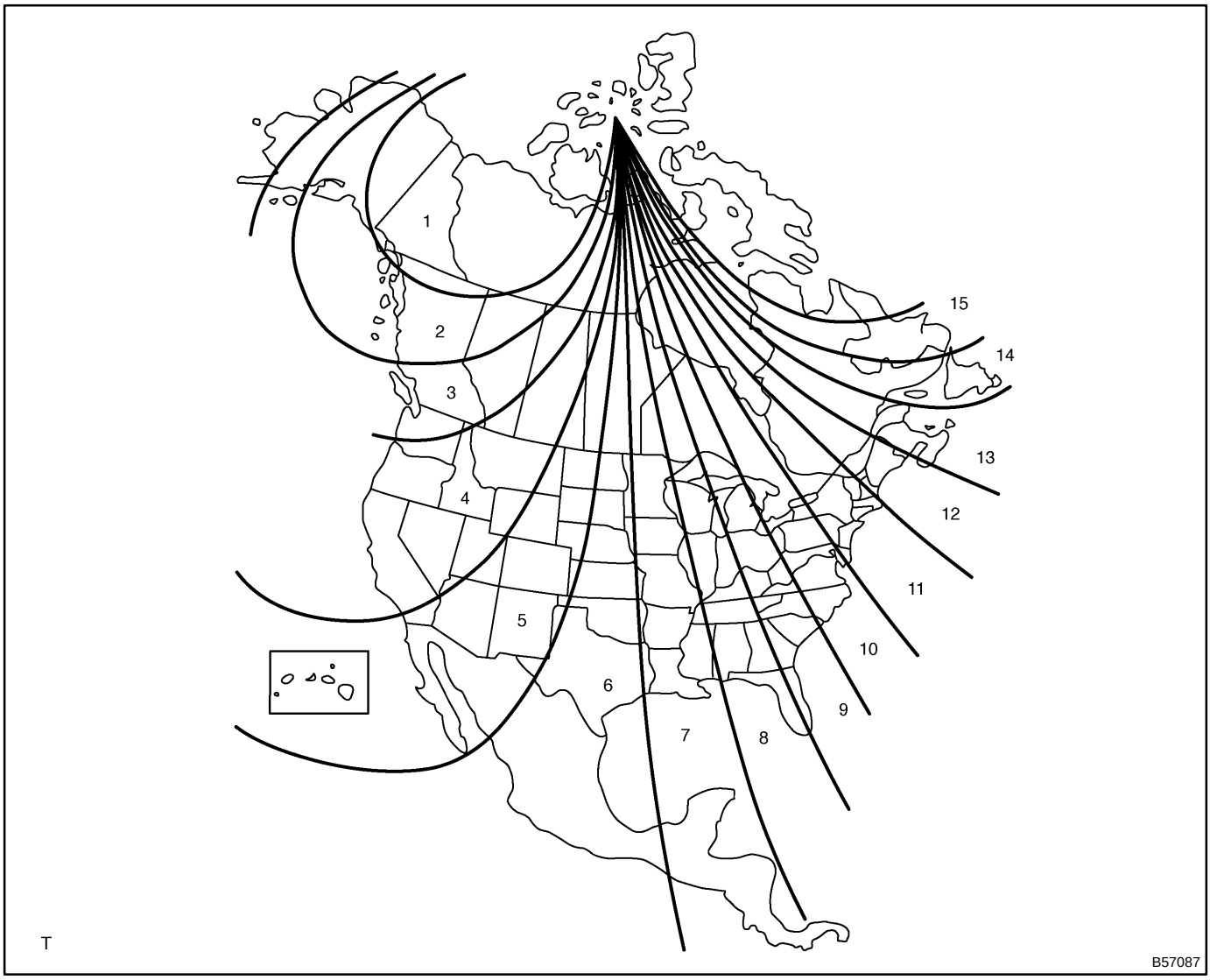

INSPECTION

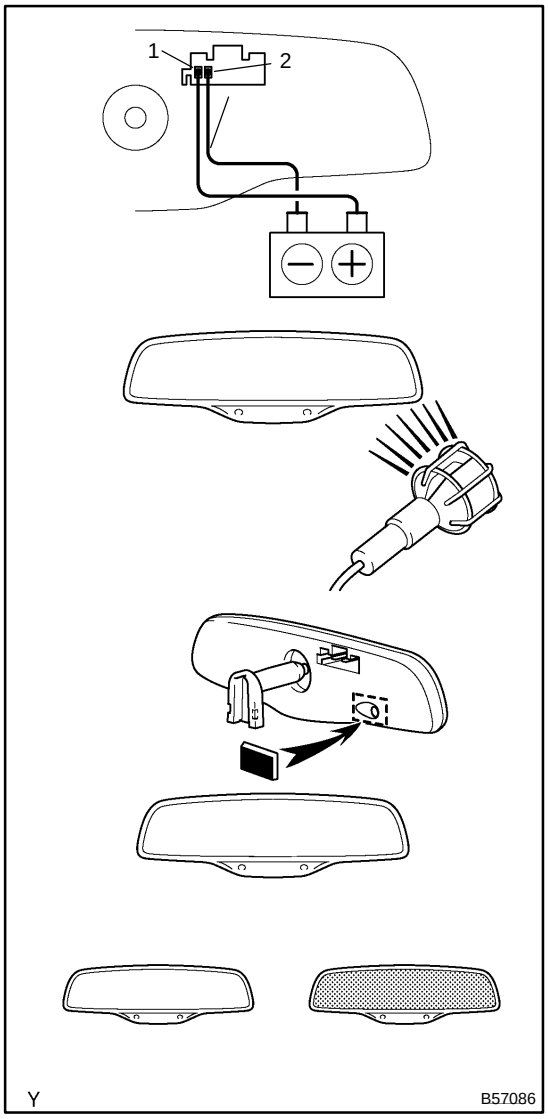

1. INSPECT INNER REAR VIEW MIRROR ASSY

(a) Inspect the electro chromic inner mirror operation.
  (1) Connect the positive (+) lead from the battery to terminal 1 and the negative (–) lead to terminal 2.
  (2) Attach a black colored tape to the forward sensor to prevent it from sensing.
  (3) Light up the mirror with an electric light, and check that the mirror surface changes from ”bright” to ”dark”.

If the operation is not as specified, replace the inner mirror.

OUTER REAR VIEW MIRROR SUB–ASSY LH

700BF–01

REPLACEMENT

HINT:
In the RH side, work in the same procedure as in the LH side.

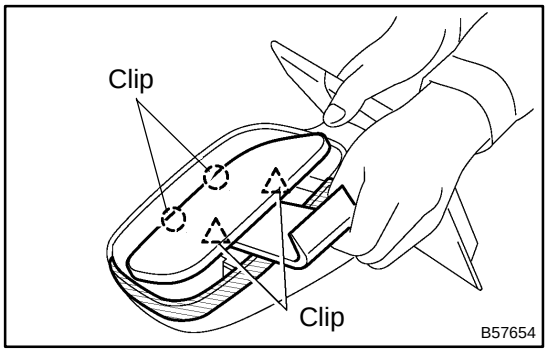

1. REMOVE OUTER REAR VIEW MIRROR SUB–ASSY LH(TMC made)

(a) Tape the lower part of outer mirror body with protection tape.
(b) Using a roof–moulding remover, disengage the clips placed in the lower part of mirror.
(c) Pull out the outer rear view mirror.

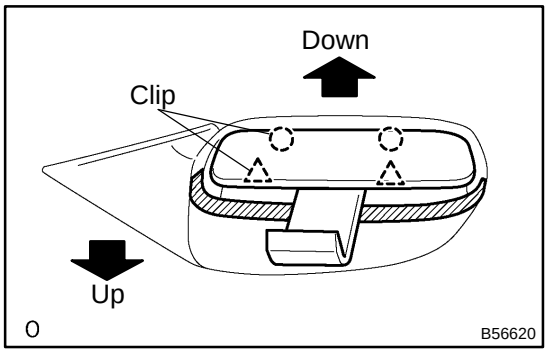

2. REMOVE OUTER REAR VIEW MIRROR SUB–ASSY LH(TMMK made)

(a) Tape the upper part of outer mirror body with protection tape.
(b) Using a roof–mouding remover, disengage the clips placed in the upper part of the mirror.
(c) Pull out the outer rear view mirror.

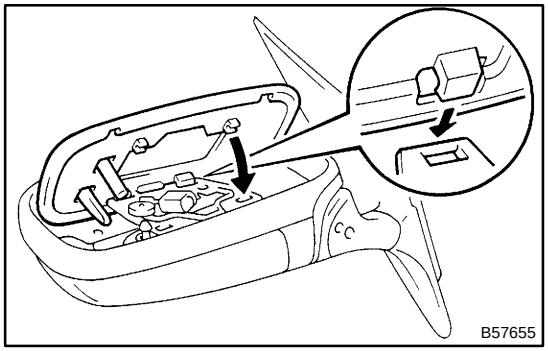

3. INSTALL OUTER REAR VIEW MIRROR SUB–ASSY LH(TMC made)

(a) Insert the claws placed in the upper part of backside of the mirror into the actuator hole.
(b) Set the mirror in the actuator.
(c) Insert the lower portion of mirror to engage the 2 clips securely.

4. INSTALL OUTER REAR VIEW MIRROR SUB–ASSY LH(TMMK made)

(a) Insert the claws placed in the lower part of backside of the mirror into the actuator hole.
(b) Set the mirror in the actuator.
(c) Insert the upper portion of mirror to engage the 2 clips securely.

COMBINATION METER

7105L–01

PROBLEM SYMPTOMS TABLE

Warning Lights and Buzzer:

Symptom	Suspect Area	See page
Check Engine warning light does not light up.	1. Wire Harness or Connector 2. ECM 3. Combination Meter Assy	– 05–1, 05–173 –
Discharge warning light does not light up.	1. Wire Harness or Connector 2. ECM 3. Combination Meter Assy	– 05–1, 05–173 –
Brake warning light does not light up.	1. Wire Harness or Connector 2. Skid control ECU 3. Combination Meter Assy	– 05–448 –
ABS warning light does not light up.	1. Wire Harness or Connector 2. Skid control ECU 3. Skid control ECU with Actuator 4. Combination Meter Assy	– 05–448 05–360, 05–401 –
SRS warning light does not light up.	1. Wire Harness or Connector 2. Airbag Sensor Assy 3. Combination Meter Assy	– 05–687 –
Open Door warning light does not light up.	1. Wire Harness or Connector 2. Front Door Courtesy Light 3. MPX Body ECU 4. Combination Meter Assy	– 05–897 – –
Fuel Level warning light does not light up.	1. Wire Harness or Connector 2. Fuel Level Warning Switch 3. Combination Meter Assy	– – –
Low Oil Pressure warning light does not light up.	1. Wire Harness or Connector 2. Low Oil Pressure Warning Switch 3. Combination Meter Assy	– – –
Window washer level warning does not lights up	1. Wire Harness or Connector 2. Window washer level waring switch 3. Combination Meter Assy	– – –

Indicator Lights:

Symptom	Suspect Area	See page
Shift indicator lights do not light up.	1. Wire Harness or Connector 2. Neutral Start Switch Circuit 3. Combination Meter Assy	– 05–548 –
Turn indicator light does not light up.	1. Wire Harness or Connector 2. Turn Signal and Hazard Warning System 3. Combination Meter Assy	– 05–897 –
High Beam indicator light does not light up.	1. Wire Harness or Connector 2. Headlight Dimmer Switch 3. Combination Meter Assy	– 05–897 –
O/D OFF indicator light does not light up.	1. Wire Harness or Connector 2. O/D Main Switch Circuit 3. ECM 4. Combination Meter Assy	– 05–548 05–1, 05–173 –

TRAC indicator light does not light up.	1. Wire Harness or Connector 2. VSC OFF Indicator, VSC Cut Switch Circuit 3. Combination Meter Assy	– 05–448 –
SLIP indicator light does not light up.	1. Wire Harness or Connector 2. Slip Indicator Circuit 3. Combination Meter Assy	– 05–448 –

Meter Gauges:

Symptom	Suspect Area	See page
Tachometer, Fuel Gauge and Water Temperature Gauge do not operate.	1. Wire Harness or Connector 2. GAUGE Fuse 3. Combination Meter Assy	– – –
Fuel Gauge does not operate or abnormal operation.	1. Wire Harness or Connector 2. Fuel Receiver Gauge 3. Combination Meter Assy	– – –

7105M–01

ON–VEHICLE INSPECTION

1. INSPECT SPEEDOMETER

(a) Check the operation.

(1) Using a speedometer tester, inspect the speedometer fro allowable indication error and check the operation of the odometer.

USA (mph):

Standard indication	Allowable range
20 mph	18 – 24 mph
40 mph	38 – 44 mph
60 mph	56 – 66 mph
80 mph	78 – 88 mph
100 mph	98 – 110 mph
120 mph	118 – 132 mph

CANADA (km/h):

Standard indication	Allowable range
20 km/h	17 – 24 km/h
40 km/h	38 – 46 km/h
60 km/h	57.5 – 67 km/h
80 km/h	77 – 88 km/h
100 km/h	96 – 109 km/h
120 km/h	115 – 130 km/h
140 km/h	134 – 151.5 km/h
160 km/h	153 – 173 km/h

NOTICE:

Tire wear and tire over or under inflation will increase the indication error.

(2) Check the deflection width of the speed meter indicator.

Reference: Below 0.5 km/h (0.3 mph)

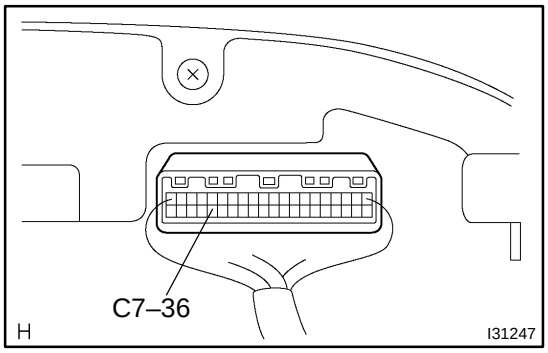

2. INSPECT OUTPUT SIGNAL OF VEHICLE SPEED

(a) Check for standard signal.

(1) While driving the vehicle at the speed of 10 km/h, check the voltage between the terminals C7–36 of the combination meter assy and body ground.

Standard: Fluctuation between 10 to 14 V or less is repeated 7 times within 1 sec.

NOTICE:

Check it with the ignition switch ON and the connector connected.

3. INSPECT TACHOMETER

(a) Check the operation

(1) Connect a tune–up test tachometer, and start the engine.

NOTICE:

- **Reversing the connection of the tachometer will damage the transistors and diodes inside.**
- **When removing or installing the tachometer, be careful not to drop or subject it to heavy shocks.**

(2) Compare the test and tachometer indications.

DC 13.5 V, 25 °C at (77 °F)

Standard indication (r/min)	Allowable range (r/min) Data in ( ) are for reference
700	630 – 770
1,000	(900 – 1,100)
2,000	(1,850 – 2,150)
3,000	2,800 – 3,200
4,000	(4,800 – 5,200)
5,000	5,750 – 6,250
6,000	(6,700 – 7,300)

Fuel Sender Gauge:



Ie–5–1–A I30899

4. INSPECT FUEL RECEIVER GAUGE

(a) Inspect the circuit.

(1) Disconnect the connector from the sender gauge.

(2) Turn the ignition switch ON, then check the position of the receiver gauge needle.

Standard:

Needle position is EMPTY and FUEL warning light is ON.

5. INSPECT FUEL LEVEL WARNING

(a) Inspect the circuit.

(1) Disconnect the connector from the sender gauge.

(2) Turn the ignition switch to ON, check the fuel level needle indicates EMPTY and fuel level warning lights light on.

6. INSPECT ENGINE COOLANT TEMPERATURE RECEIVER GAUGE WARNING LIGHT

(a) Inspect the circuit.

(1) Disconnect the connector from the sender gauge.

(2) Turn the ignition switch to ON, check the position of the water temperature receiver gauge needle.

Needle position: COOL

(3) Ground terminal 2 on the wire harness side, then check the position of the water temperature receiver gauge needle.

Needle position: HOT

7. INSPECT SEAT BELT WARNING LIGHT (Driver's seat)

(a) Check the operation.
   (1) Turn the ignition switch to ON and check that the warning light lights up.
   (2) Fasten the outer belt to the inner belt and check that the warning light lights out.
   (3) Disconnect the connector from the buckle switch and ground terminal on the wire harness side connector.
   (4) Turn the ignition switch to ON and check that the warning light lights up.

8. INSPECT LOW OIL PRESSURE WARNING LIGHT

(a) Inspect the circuit.
   (1) Disconnect the connector from the low oil pressure switch.
   (2) Turn the ignition switch to ON.
   (3) Connect the terminal of wire harness side connector and ground, then check the warning low oil pressure warning light.

   Low oil pressure warning light: Light on

9. INSPECT BRAKE WARNING LIGHT

(a) Inspect the parking brake warning light.
   (1) Disconnect the connector from the parking brake switch and ground terminal on the wire harness side connector.
   (2) Turn the ignition switch to ON and check that the warning light lights up.

(b) Inspect the brake fluid level warning light.
   (1) Disconnect the connector from the brake fluid level warning switch and connect terminals on the wire harness side connector.
   (2) Turn the ignition switch to ON and check that the warning light lights up.

10. INSPECT BRAKE FLUID LEVEL WARNING SWITCH

(a) Inspect the continuity.
   (1) Remove the reservoir tank cap and strainer.
   (2) Disconnect the connector.
   (3) Check that the continuity exists between the terminals.

   Float up (switch off): No continuity

   (4) Use syphon, etc., to take fluid out of the reservoir tank.
   (5) Check that the continuity exists between the terminals.

   Float down (switch on): Continuity

   (6) Pour the fluid back in the reservoir tank.

11. INSPECT DRIVER'S SEAT BELT WARNING BUZZER

(a) Check warning buzzer function.
   (1) Turn the ignition switch to ON and check that the driver's seat belt warning sounds if the driver's seat belt is not fastened.
   (2) Check that the buzzer stop after about 4 to 8 seconds.

12. INSPECT KEY REMINDER WARNING BUZZER

(a) Check warning buzzer function.
   (1) Turn the ignition switch to OFF and check that the key reminder warning sounds if the ignition key is insert the key cylinder and front diriver side door is opened.

7105N–01

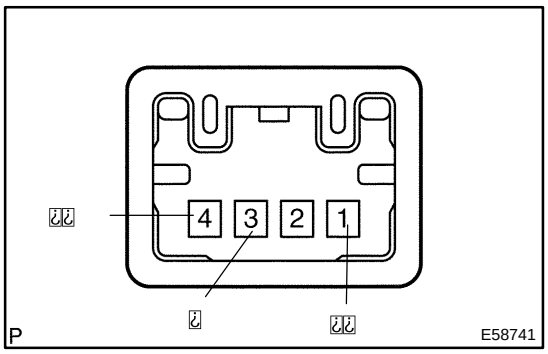

INSPECTION

1. LIGHT CONTROL RHEOSTAT

(a) Inspect continuity.

(1) Check the continuity between the light control rheostat connector terminals when operating the rheostat volume knob.

Standard:

Switch	Terminal No. (Symbol)	Continuity
Turn the knob to maximum	1 (TC) ⇔ 3 (T)	Continuity
Other conditions of the above	1 (TC) ⇔ 3 (T)	No continuity

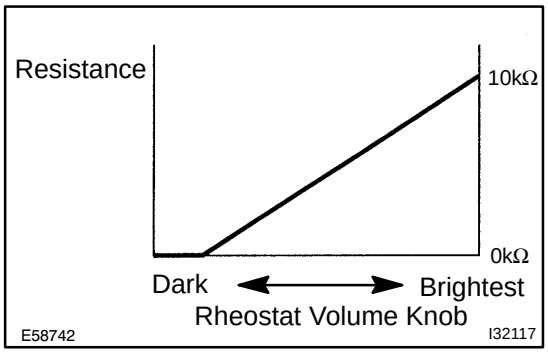

(b) Check resistance.

(1) Check the resistance between terminal 4 (RV) and terminal 3 (T) when operating the light control rheostat volume knob. Also, check that the resistance changes continuously.

Standard resistance:

Turn the knob to maximum: Approx. 10 kΩ

Turn the knob to minimum: Approx. 0 kΩ

INSTRUMENT PANEL/METER

COMPONENTS

7105G–01

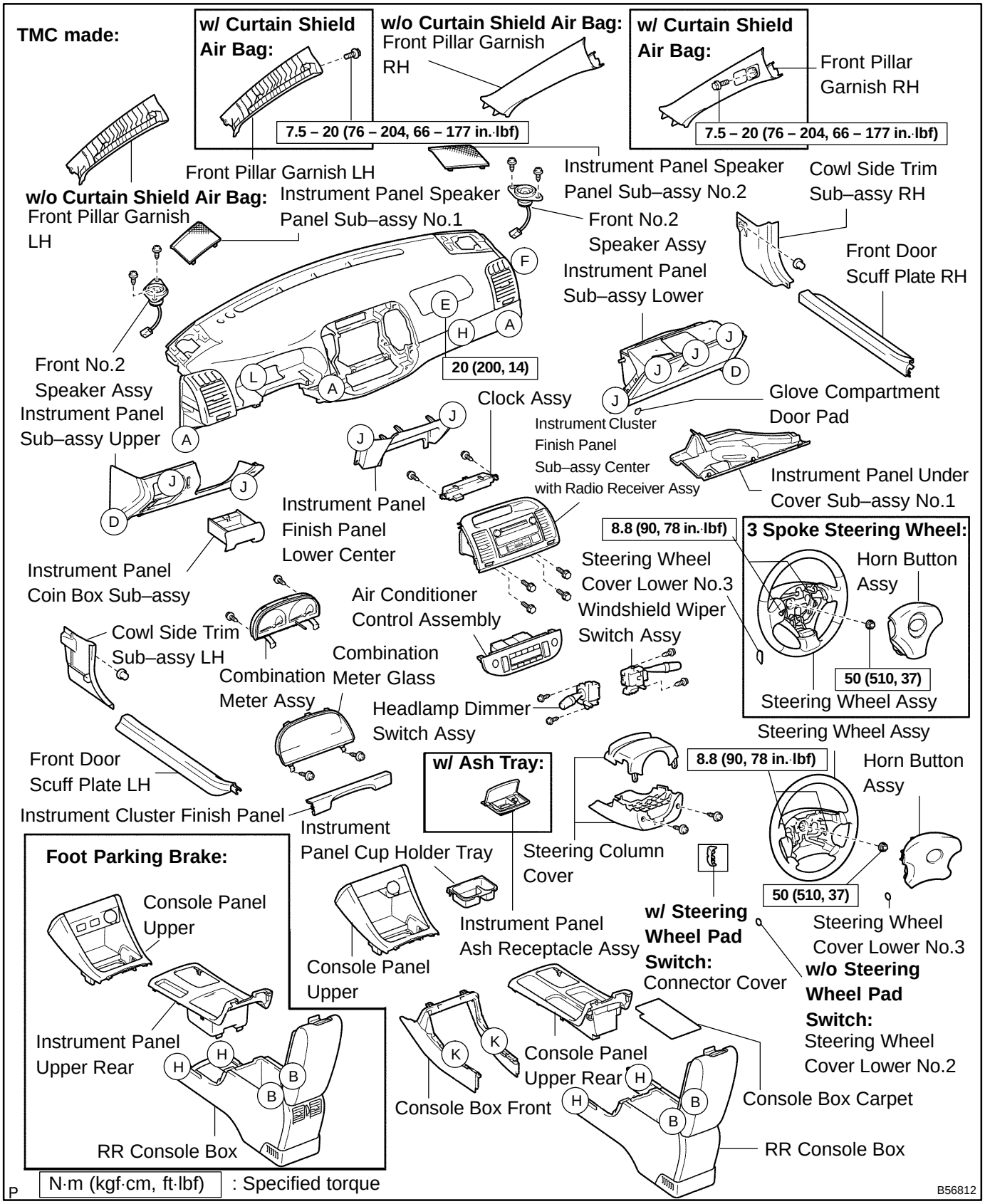

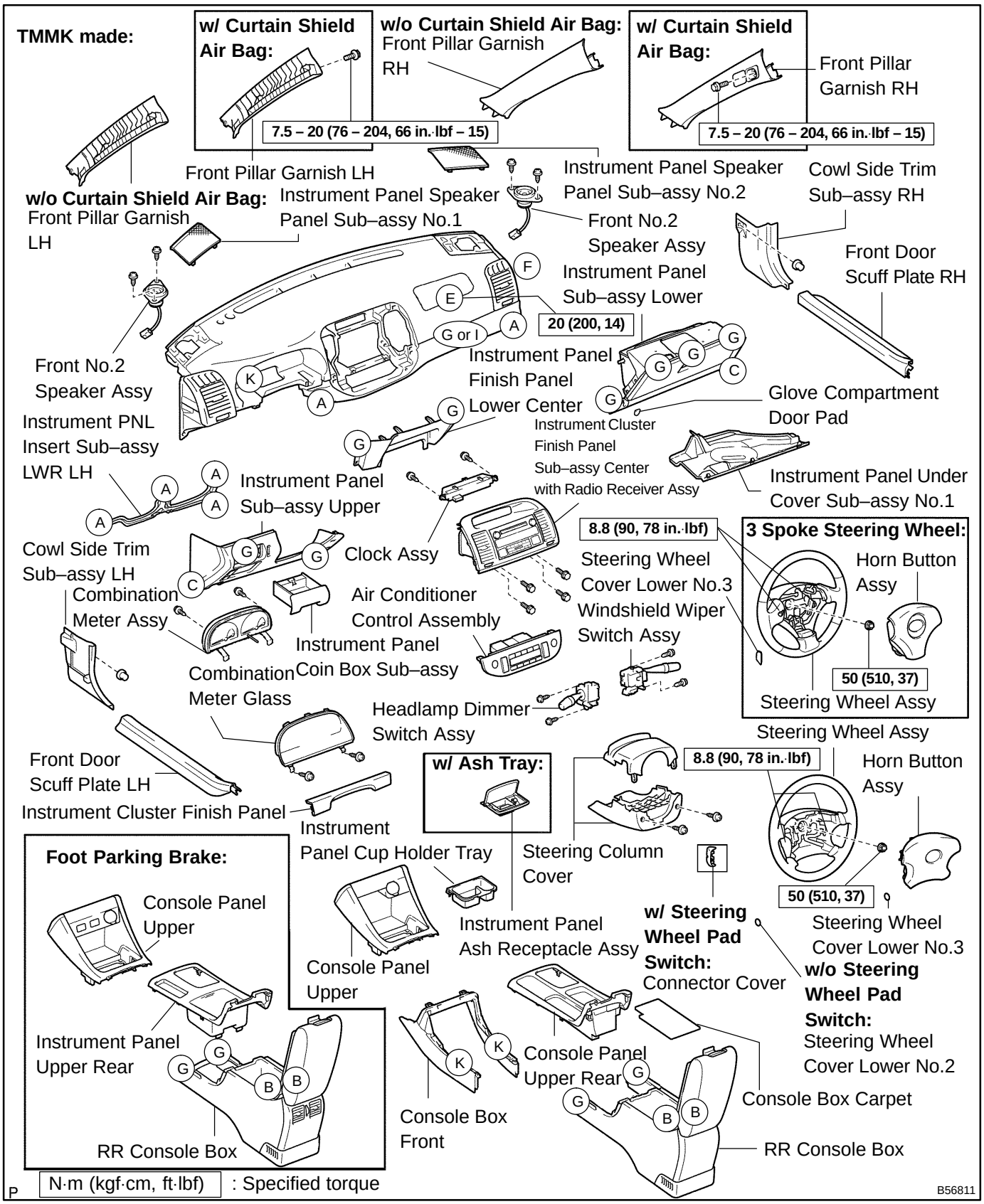
TMMK made:
w/ Curtain Shield Air Bag:
7.5 – 20 (76 – 204, 66 in.·lbf – 15)
w/o Curtain Shield Air Bag:
Front Pillar Garnish RH
w/ Curtain Shield Air Bag:
Front Pillar Garnish RH
7.5 – 20 (76 – 204, 66 in.·lbf – 15)
Front Pillar Garnish LH
w/o Curtain Shield Air Bag:
Front Pillar Garnish LH
Instrument Panel Speaker Panel Sub–assy No.1
Instrument Panel Speaker Panel Sub–assy No.2
Front No.2 Speaker Assy
Cowl Side Trim Sub–assy RH
Front Door Scuff Plate RH
Instrument Panel Sub–assy Lower
20 (200, 14)
Front No.2 Speaker Assy
Instrument Panel Finish Panel Lower Center
Glove Compartment Door Pad
Instrument PNL Insert Sub–assy LWR LH
Instrument Cluster Finish Panel Sub–assy Center with Radio Receiver Assy
Instrument Panel Under Cover Sub–assy No.1
Instrument Panel Sub–assy Upper
8.8 (90, 78 in.·lbf)
3 Spoke Steering Wheel:
Cowl Side Trim Sub–assy LH
Clock Assy
Steering Wheel Cover Lower No.3
Horn Button Assy
Combination Meter Assy
Air Conditioner Control Assembly
Windshield Wiper Switch Assy
50 (510, 37)
Instrument Panel Coin Box Sub–assy
Combination Meter Glass
Steering Wheel Assy
Headlamp Dimmer Switch Assy
Front Door Scuff Plate LH
w/ Ash Tray:
8.8 (90, 78 in.·lbf)
Horn Button Assy
Instrument Cluster Finish Panel
Instrument Panel Cup Holder Tray
Steering Column Cover
50 (510, 37)
Steering Wheel Assy
Foot Parking Brake:
Console Panel Upper
Instrument Panel Ash Receptacle Assy
w/ Steering Wheel Pad Switch:
Steering Wheel Cover Lower No.3
Console Panel Upper
Connector Cover
w/o Steering Wheel Pad Switch:
Steering Wheel Cover Lower No.2
Instrument Panel Upper Rear
Console Panel Upper Rear
Console Box Carpet
Console Box Front
RR Console Box
RR Console Box
N·m (kgf·cm, ft·lbf) : Specified torque
B56811

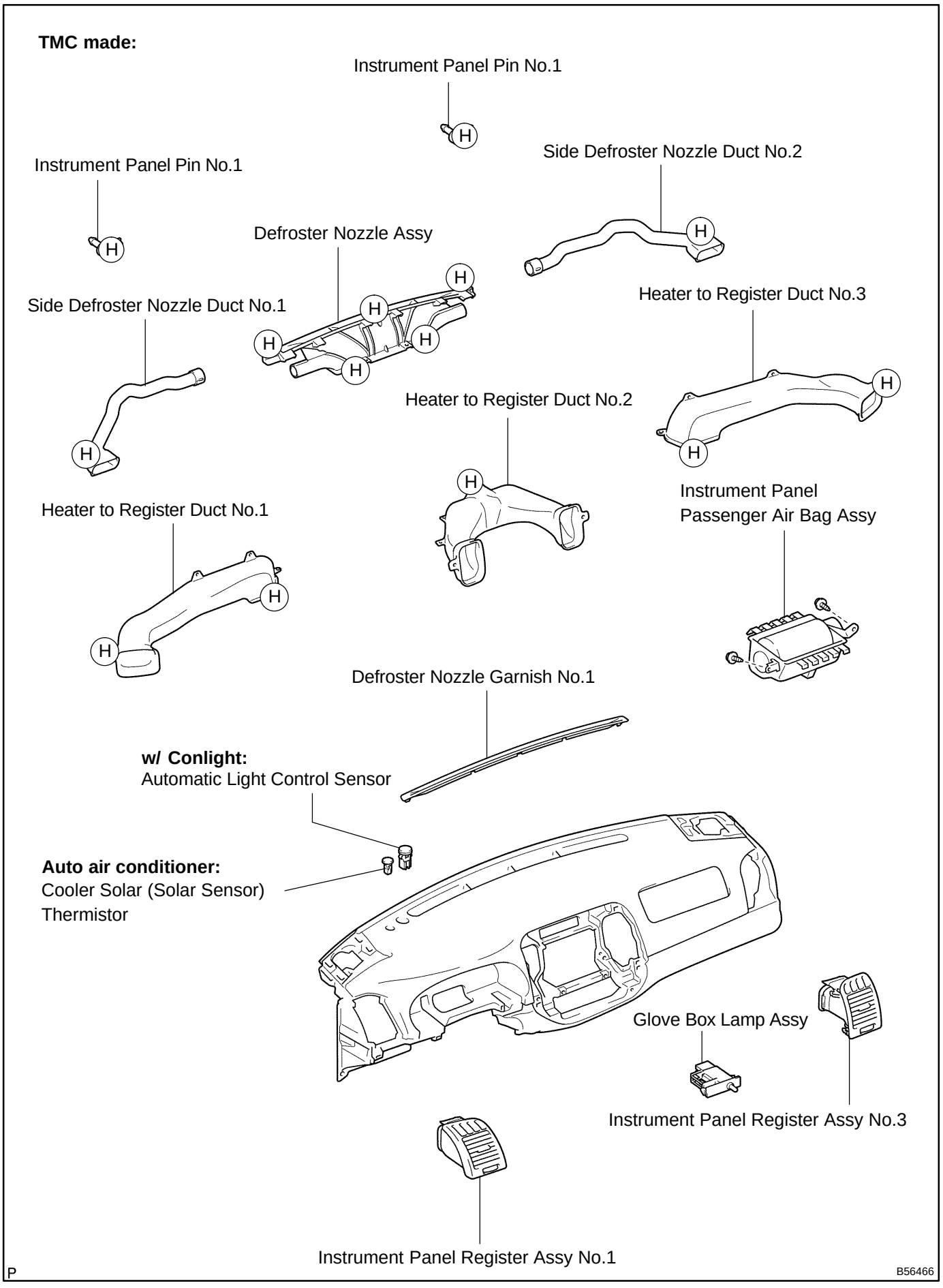
TMC made:
Instrument Panel Pin No.1
Instrument Panel Pin No.1
Side Defroster Nozzle Duct No.2
Defroster Nozzle Assy
Side Defroster Nozzle Duct No.1
Heater to Register Duct No.3
Heater to Register Duct No.2
Heater to Register Duct No.1
Instrument Panel
Passenger Air Bag Assy
Defroster Nozzle Garnish No.1
w/ Conlight:
Automatic Light Control Sensor
Auto air conditioner:
Cooler Solar (Solar Sensor)
Thermistor
Glove Box Lamp Assy
Instrument Panel Register Assy No.3
Instrument Panel Register Assy No.1
P
B56466

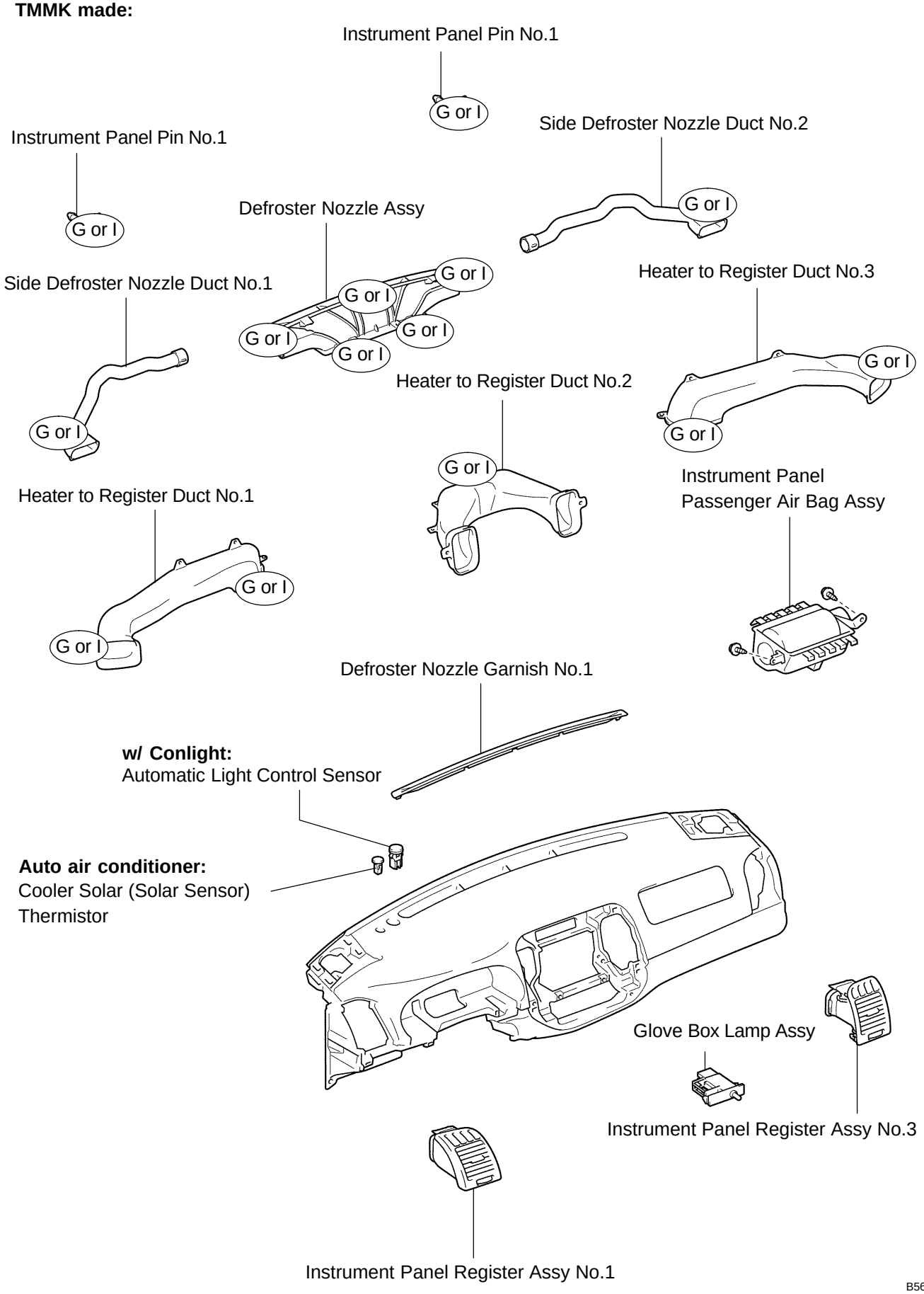
TMMK made:
Instrument Panel Pin No.1
G or I
Instrument Panel Pin No.1
G or I
Side Defroster Nozzle Duct No.2
G or I
Defroster Nozzle Assy
G or I
G or I
G or I
G or I
Side Defroster Nozzle Duct No.1
G or I
Heater to Register Duct No.3
G or I
G or I
Heater to Register Duct No.2
G or I
Instrument Panel
Passenger Air Bag Assy
Heater to Register Duct No.1
G or I
G or I
Defroster Nozzle Garnish No.1
w/ Conlight:
Automatic Light Control Sensor
Auto air conditioner:
Cooler Solar (Solar Sensor)
Thermistor
Glove Box Lamp Assy
Instrument Panel Register Assy No.3
Instrument Panel Register Assy No.1
P
B56466

INSTRUMENT PANEL SAFETY PAD SUB–ASSY

7105H–01

PRECAUTION

1. PRECAUTION FOR VEHICLE WITH SRS AIRBAG AND SEAT BELT PRETENSIONER

(a) Some operations in this section may affect the SRS airbag. Before performing the corresponding operations, please read the NOTICE of the SRS airbag to perform the proper operations.

7105I–02

REPLACEMENT

HINT:

COMPONENTS: See page 71–7

1. TABLE OF BOLT,SCREW AND NUT

HINT:

Indicate the bolts, screws and nuts, which are necessary for installation and removal of the instrument panel, in the illustration and the text with alphabets.

mm (in.) (L = Length)

Code	Shape	Code	Shape	Code	Shape
<A>	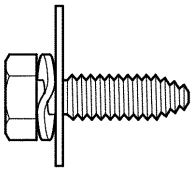 ϕ=6 (0.24) L=20 (0.79) B30741 90119-06144	<B>	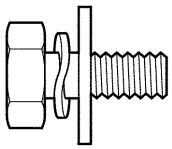 ϕ=6 (0.24) L=16 (0.63) B55950 90119-06220	<C>	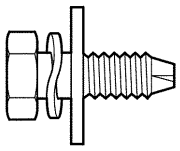 ϕ=6 (0.24) L=18 (0.71) B55951 90119-06428
<D>	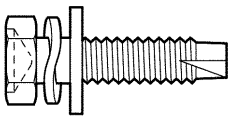 ϕ=6 (0.24) L=25 (0.98) B55952 90119-06429	<E>	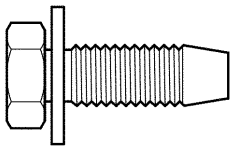 ϕ=8 (0.31) L=20 (0.79) B31940 91633-60820	<F>	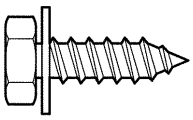 ϕ=6 (0.24) L=20 (0.79) B55953 90159-60200
<G>	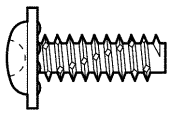 ϕ=5 (0.20) L=14 (0.55) B55954 90167-50002	<H>	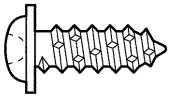 ϕ=5.22 (0.2055) L=16 (0.63) B30768 93567-15016	<I>	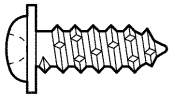 ϕ=5 (0.20) L=16 (0.63) B30768 93567-55016
<J>	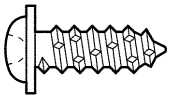 ϕ=5 (0.20) L=18 (0.71) B30768 93567-55018	<K>	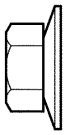 ϕ=6 (0.24) B51290 90179-06097	<L>	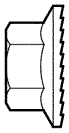 ϕ=6 (0.24) B33327 90179-06115

P B55949

2. DISCONNECT BATTERY NEGATIVE TERMINAL(See page 60–1)

3. REMOVE STEERING WHEEL COVER LOWER NO.2

4. REMOVE STEERING WHEEL COVER LOWER NO.3(W/O STEERING PAD SWITCH 4 SPOKE STEERING WHEEL)

5. REMOVE CONNECTOR COVER(W/ STEERING PAD SWITCH 4 SPOKE STEERING WHEEL) (See page 82–5)

6. REMOVE STEERING WHEEL COVER LOWER NO.3(3 SPOKE STEERING WHEEL ASSY)

7. PLACE FRONT WHEELS FACING STRAIGHT AHEAD

8. REMOVE HORN BUTTON ASSY
(See page 60–15)

9. REMOVE STEERING WHEEL ASSY
(See page 50–9 or 50–22)
SST 09950–50013 (09951–05010, 09952–05010, 09953–05020, 09954–05021)

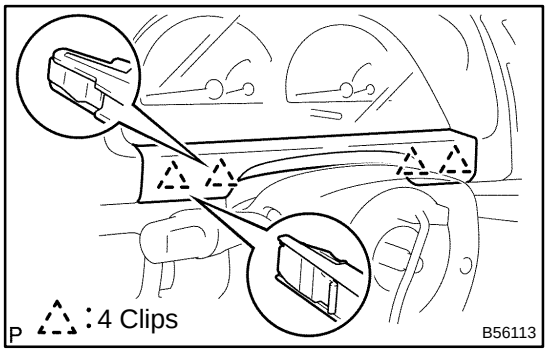

10. REMOVE INSTRUMENT CLUSTER FINISH PANEL

(a) Disengage the 4 clips and remove the instrument cluster finish panel.

11. REMOVE STEERING COLUMN COVER
(See page 50–9 or 50–22)

12. REMOVE HEADLAMP DIMMER SWITCH ASSY
(See page 65–17)

13. REMOVE WINDSHIELD WIPER SWITCH ASSY
(See page 66–10)

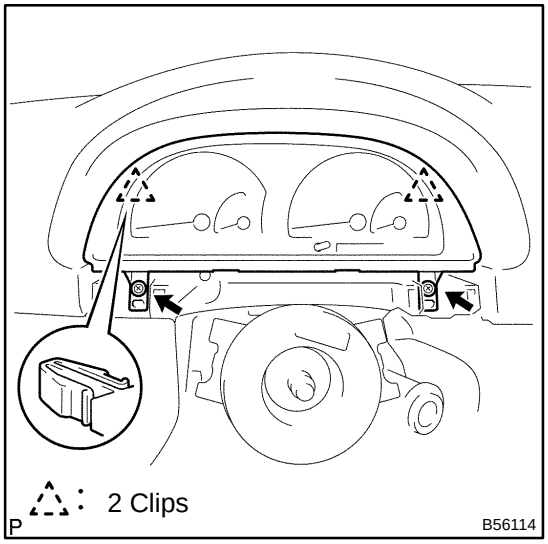

14. REMOVE COMBINATION METER ASSY

(a) Remove the 2 screws and disengage the 2 clips.
(b) Pull out the combination meter assy, then disconnect the connectors.

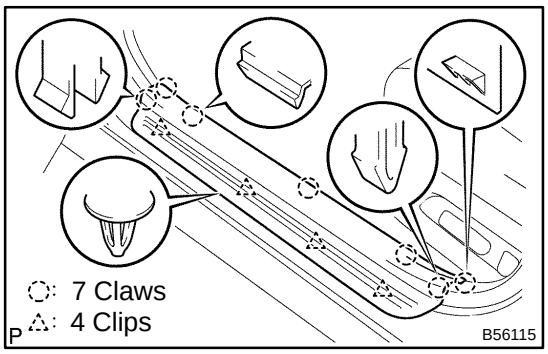

15. REMOVE FRONT DOOR SCUFF PLATE LH

(a) Disengage the 7 claws, 4 clips and remove the front door scuff plate LH.

16. REMOVE FRONT DOOR SCUFF PLATE RH

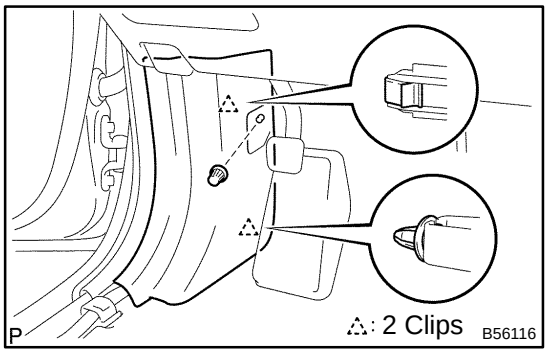

17. REMOVE COWL SIDE TRIM SUB–ASSY LH

(a) Remove the clip.
(b) Disengage the 2 clips and remove the cowl side trim sub–assy LH.

18. REMOVE COWL SIDE TRIM SUB–ASSY RH

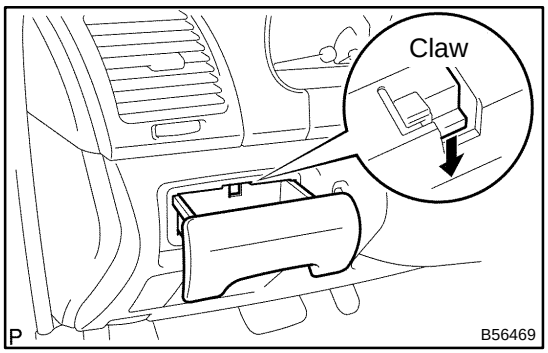

19. REMOVE INSTRUMENT PANEL COIN BOX SUB–ASSY

(a) Disengage the claw and remove the instrument panel coin box sub–assy.

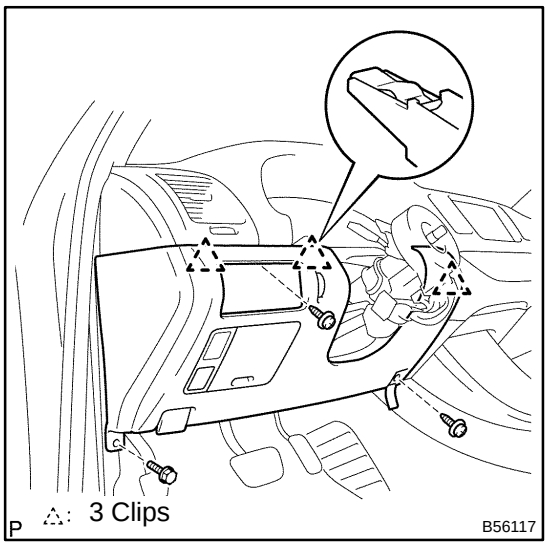

20. REMOVE INSTRUMENT PANEL SUB–ASSY UPPER

(a) Disconnect the hood lock control cable.
(b) Using a screwdriver, open the instrument panel sub–assy upper cover.

HINT:
Tape the screwdriver tip, before use.

(c) TMC made:
Remove the bolt<D> and 2 screws<J>.
(d) TMMK made:
Remove the bolt<C> and 2 screws<G>.
(e) Disengage the 3 clips.
(f) Disconnect the connectors and remove the instrument panel sub–assy upper.

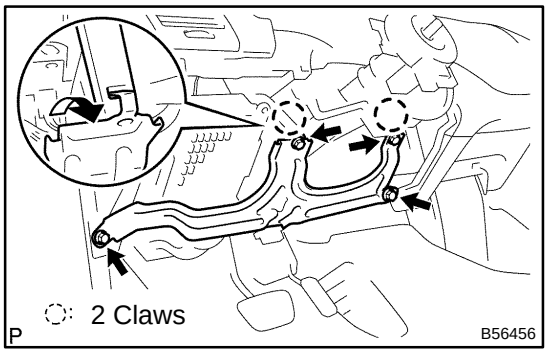

21. REMOVE INSTRUMENT PNL INSERT SUB–ASSY LWR LH(TMMK MADE)

(a) Remove the 4 bolts<A>.
(b) Disengage the 2 claws and remove the instrument panel insert sub–assy LWR LH.

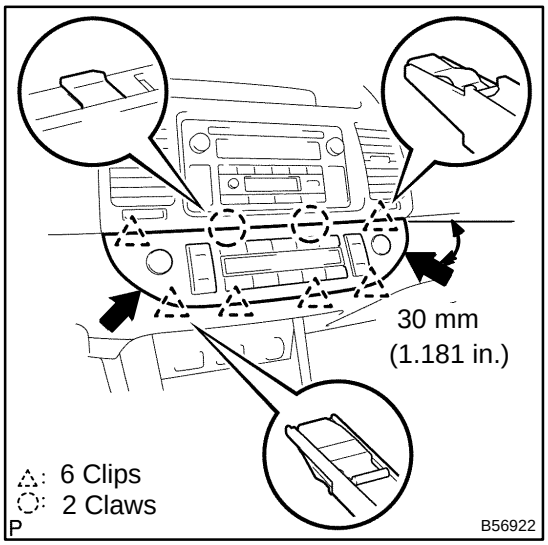

22. REMOVE AIR CONDITIONER CONTROL ASSEMBLY

(a) Using a screwdriver, disengage the 6 clips, 2 claws and remove the air conditioner control assembly then disconnect the connectors.

HINT:
Tape the screwdriver tip, before use.

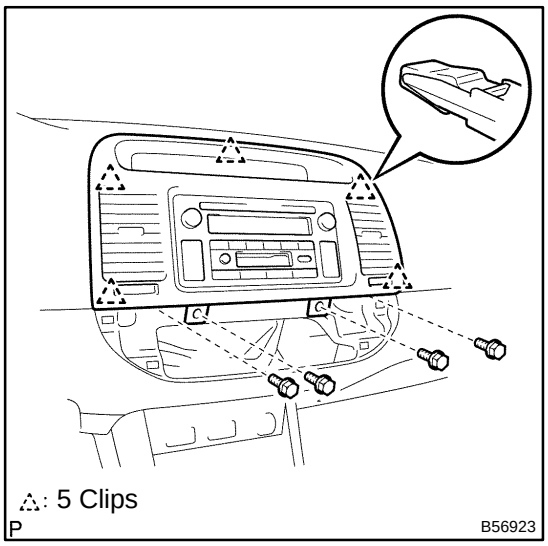

23. REMOVE INSTRUMENT CLUSTER FINISH PANEL SUB–ASSY CENTER

(a) Remove the 4 bolts.
(b) Using a moulding remover, disengage 5 clips and remove the instrument cluster finish panel sub–assy center with radio receiver assy, then disconnect the connectors.

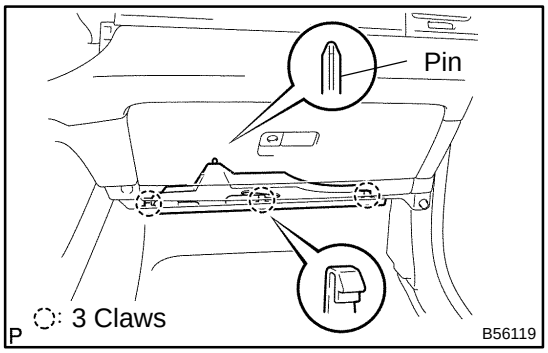

24. REMOVE INSTRUMENT PANEL UNDER COVER SUB–ASSY NO.1

(a) Disengage the 3 claws and pin.
(b) Remove the instrument panel under cover sub–assy No.1.

25. REMOVE GLOVE COMPARTMENT DOOR PAD

(a) Using a screwdriver, remove the glove compartment door pad.

HINT:

Tape the screwdriver tip, before use.

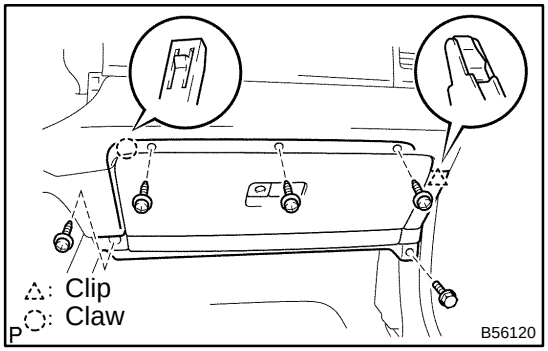

26. REMOVE INSTRUMENT PANEL SUB–ASSY LOWER

(a) TMC made:
Remove the bolt<D> and 4 screws <J>.
(b) TMMK made:
Remove the bolt<C> and 4 screws <G>.
(c) Disengage the claw, clip and remove the instrument panel sub–assy lower.

27. REMOVE FLOOR SHIFT SHIFT LEVER KNOB SUB–ASSY(M/T TRANSAXLE)

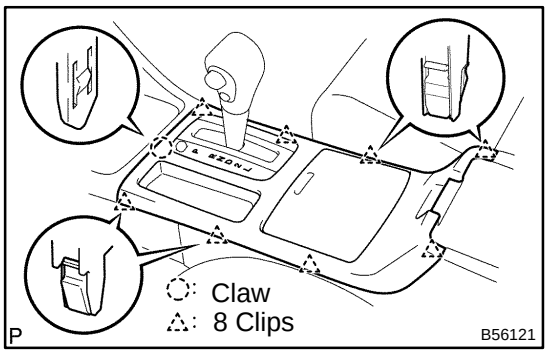

28. REMOVE CONSOLE PANEL UPPER REAR

(a) Foot parking brake:
Using a moulding remover, disengage the claw, 8 clips and remove the console panel upper rear.

HINT:
Set the shift lever N range(A/T).

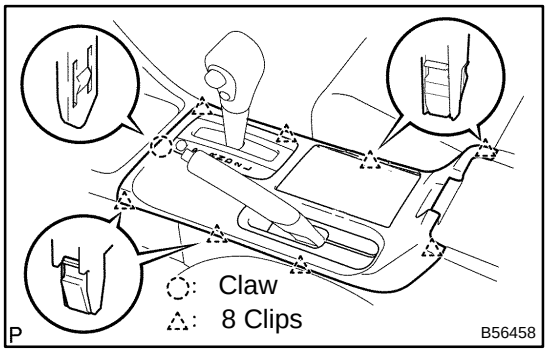

(b) Hand parking brake:
Disengage the clip and 2 claws, then remove the console panel cup holder.

(c) Hand parking brake:
Using a moulding remover, disengage the claw, 8 clips and remove the console panel upper rear.

HINT:
Set the shift lever N range(A/T).

29. REMOVE CONSOLE BOX CARPET

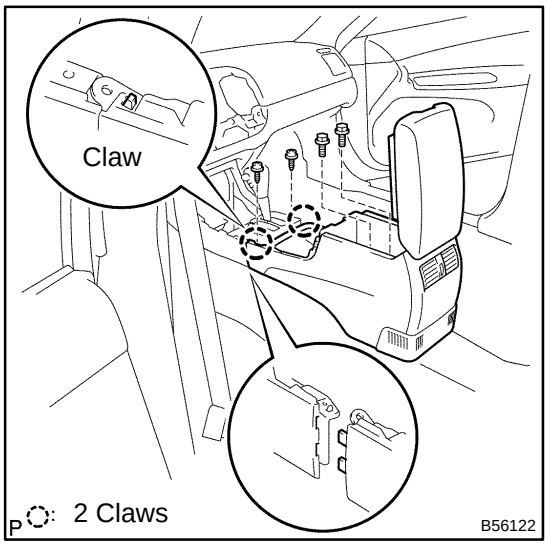

30. REMOVE RR CONSOLE BOX

(a) TMC made:
Remove the 2 bolts<B> and 2 screws<H>.

(b) TMMK made:
Remove the 2 bolts<B> and 2 screws<G>.

(c) Disengage the 2 claws and remove the RR console box.

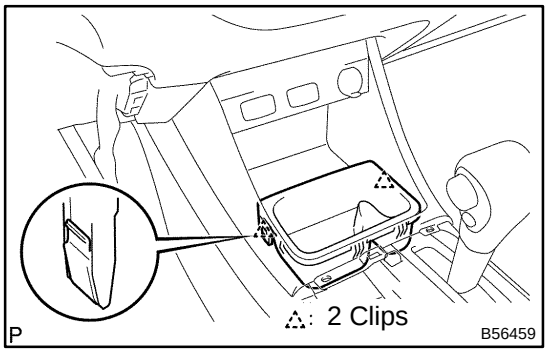

31. REMOVE INSTRUMENT PANEL CUP HOLDER TRAY(W/O ASHTRAY)

(a) Disengage the 2 clips and remove the instrument panel cup holder tray.

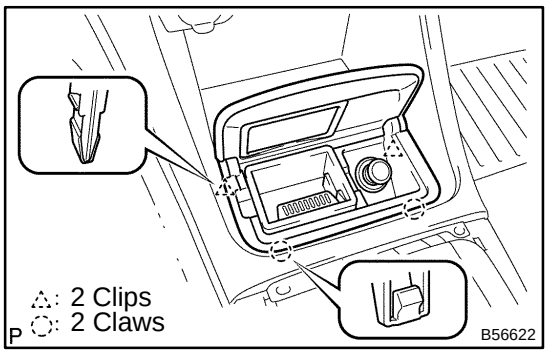

32. REMOVE INSTRUMENT PANEL ASH RECEPTACLE ASSY(W/ ASHTRAY)

(a) Disengage the 2 clips, 2 claws and disconnect the connector.
(b) Remove the instrument panel ash receptacle assy.

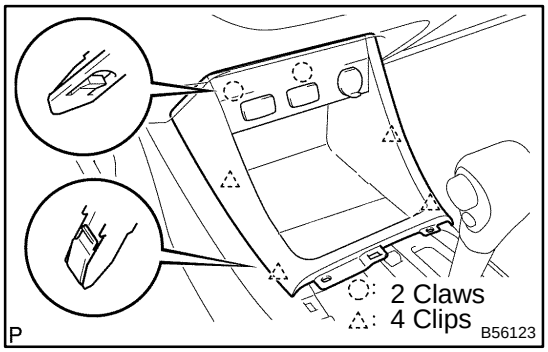

33. REMOVE CONSOLE PANEL UPPER

(a) Using a moulding remover, disengage the 4 clips and 2 claws.
(b) Disconnect the connectors and remove the console panel upper.

HINT:
Set the shift lever N range(A/T).

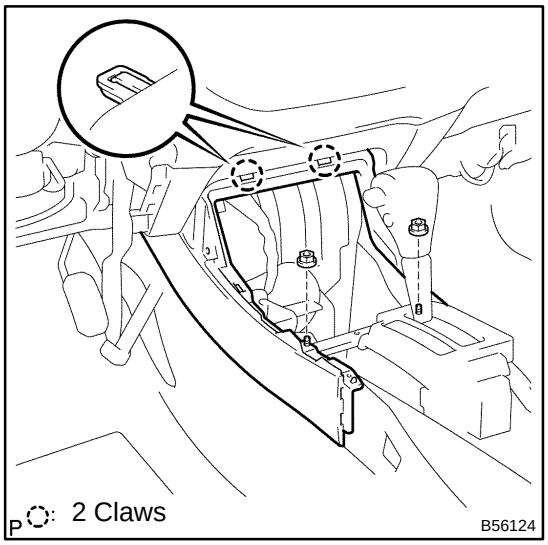

34. REMOVE CONSOLE BOX FRONT

(a) Remove the 2 nuts<K>.
(b) Disengage the 2 claws and remove the console box front.

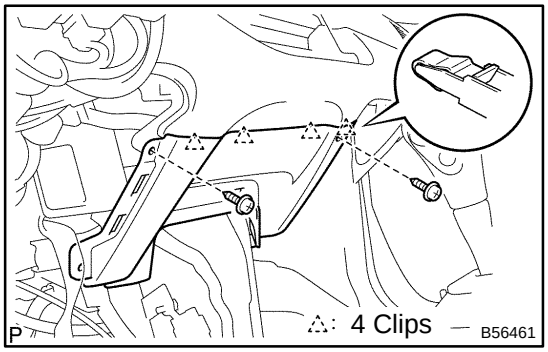

35. REMOVE INSTRUMENT PANEL FINISH PANEL LOWER CENTER

(a) TMC made:
Remove the 2 screws<J>.
(b) TMMK made:
Remove the 2 screws<G>.
(c) Disengage the 4 clips and remove the instrument panel finish panel lower center.

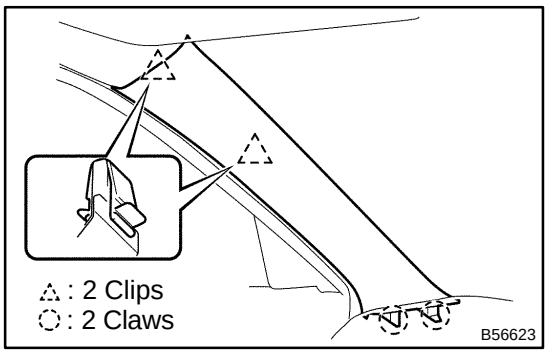

36. REMOVE FRONT PILLAR GARNISH LH(W/O CURTAIN SHIELD AIR BAG)

(a) Using a moulding remover, disengage the 2 clips, 2 claws and remove the front pillar garnish LH.

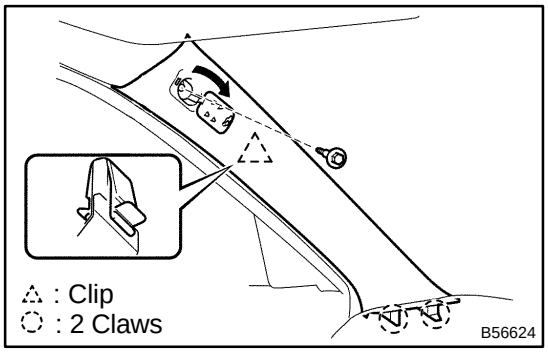

37. REMOVE FRONT PILLAR GARNISH LH(W/ CURTAIN SHIELD AIR BAG)

(a) Using a screwdriver, open the cover and remove the bolt.

HINT:

Tape the screwdriver tip, before use.

(b) Using a moulding remover, disengage the clip, 2 claws and remove the front pillar garnish LH.

38. REMOVE FRONT PILLAR GARNISH RH(W/O CURTAIN SHIELD AIR BAG)

39. REMOVE FRONT PILLAR GARNISH RH(W/ CURTAIN SHIELD AIR BAG)

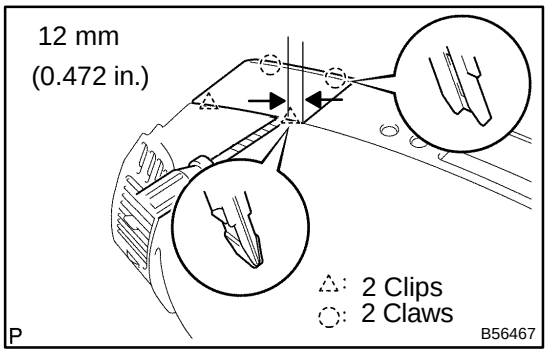

40. REMOVE INSTRUMENT PANEL SPEAKER PANEL SUB–ASSY NO.2

(a) Using a screwdriver, disengage the 2 clips and 2 claws.

HINT:

Tape the screwdriver tip, before use.

(b) Remove the instrument panel speaker panel sub–assy No.2.

41. REMOVE INSTRUMENT PANEL SPEAKER PANEL SUB–ASSY

42. REMOVE FRONT NO.2 SPEAKER ASSY
(See page 67–6)

43. DISCONNECT PASSENGER AIRBAG CONNECTOR(See page 60–30)

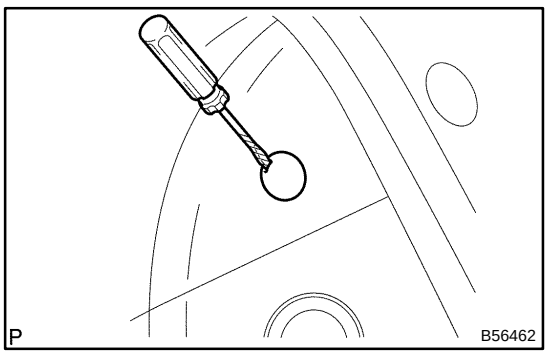

44. REMOVE INSTRUMENT PANEL SAFETY PAD CAP

(a) Using a screwdriver, remove the instrument panel safety pad cap.

HINT:

Tape the screwdriver tip, before use.

45. REMOVE INSTRUMENT PANEL SAFETY PAD SUB–ASSY

(a) TMC made:
Remove the 2 screws<H><F>, nut<L> and 4 bolts<A><E>.
(b) TMMK made:
Remove the 2 screws<G or I><F>, nut<K> and 3 bolts<A><E>.
(c) Disconnect the connectors.
(d) Disengage the 5 pins and, remove the instrument panel safety pad sub–assy.

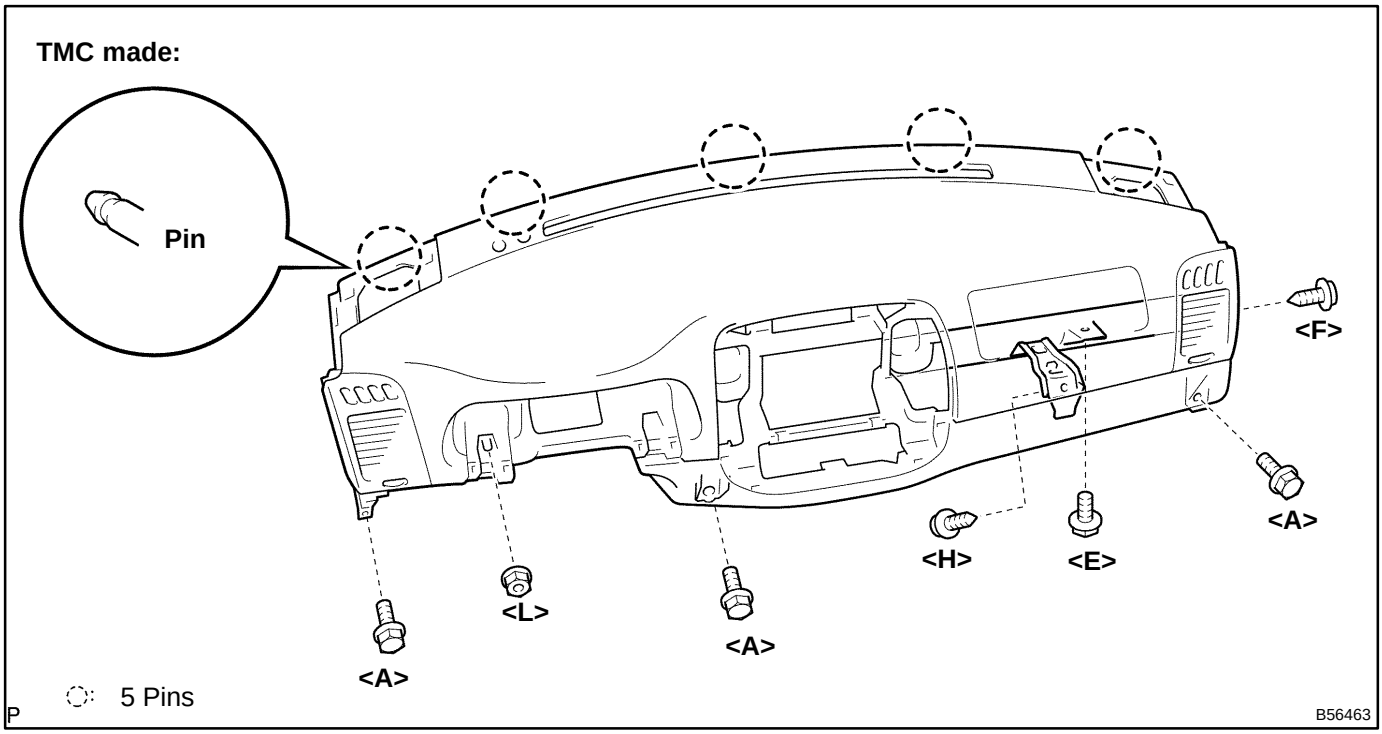

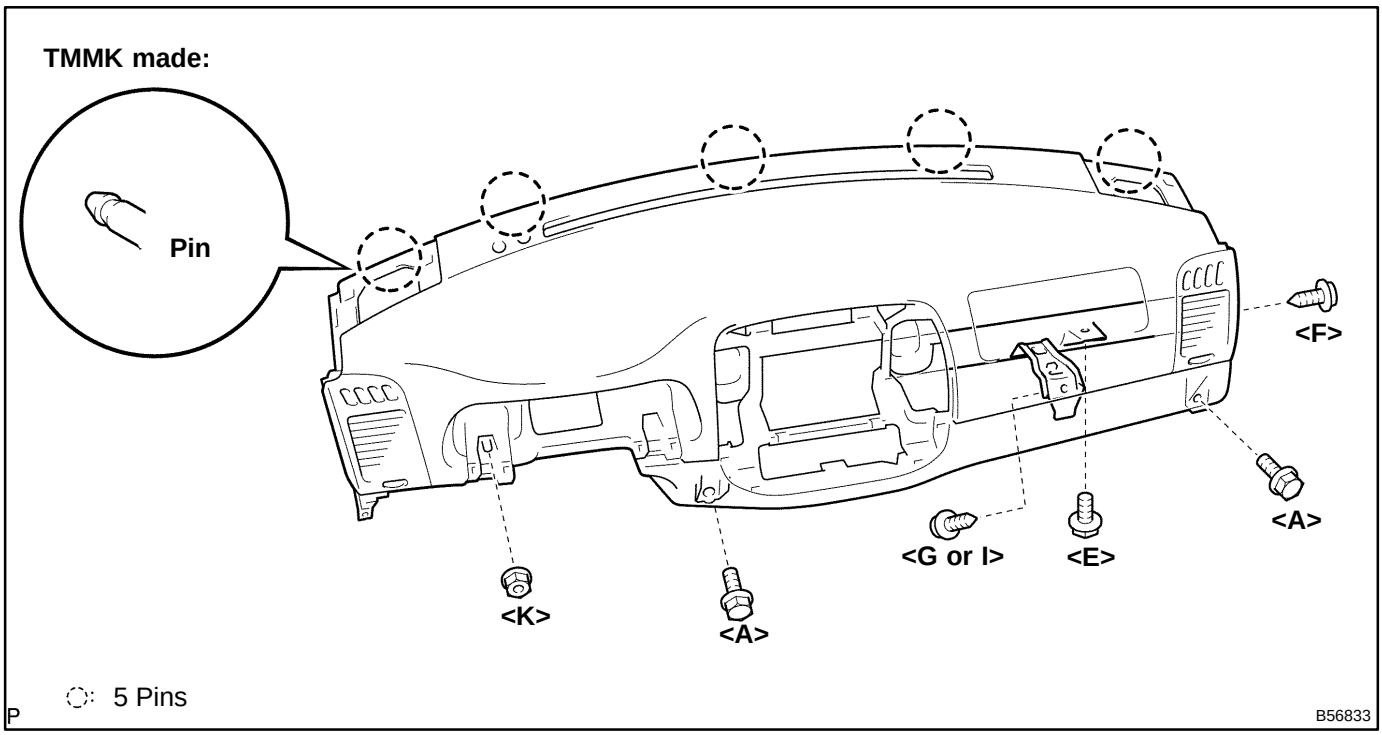

46. REMOVE INSTRUMENT PANEL REGISTER ASSY NO.2

(a) Disengage the 3 clips and 3 claws.
(b) Remove the instrument panel register assy No.2.

47. REMOVE INSTRUMENT PANEL REGISTER ASSY NO.1

(a) Disengage the 3 clips and 3 claws.
(b) Remove the instrument panel register assy No.1.

48. REMOVE GLOVE BOX LAMP ASSY

(a) Disengage the 4 claws and remove the glove box lamp assy.

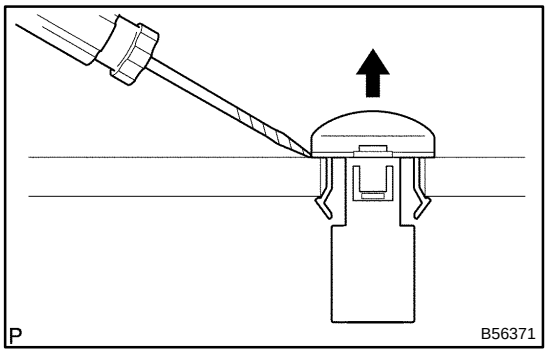

49. REMOVE AUTOMATIC LIGHT CONTROL SENSOR(W/ CONLIGHT)

(a) Using a screwdriver, remove the automatic light control sensor.

HINT:
Tape the screwdriver tip, before use.

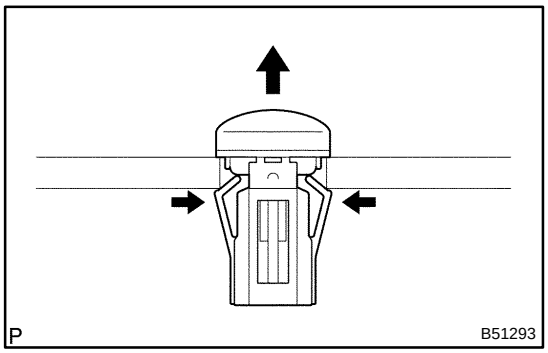

50. REMOVE COOLER (SOLAR SENSOR) THERMISTOR(AUTO AIR CONDITIONER)

(a) Remove the cooler (solar sensor) thermistor.

NOTICE:
Do not pry the cooler (solar sensor) thermistor off from the upper position.

51. REMOVE SIDE DEFROSTER NOZZLE DUCT NO.2

(a) TMC made:
Remove the screw<H> and side defroster nozzle duct No.2.
(b) TMMK made:
Remove the screw<G or I> and side defroster nozzle duct No.2.

52. REMOVE SIDE DEFROSTER NOZZLE DUCT NO.1

(a) TMC made:
Remove the screw<H> and side defroster nozzle duct No.1.
(b) TMMK made:
Remove the screw<G or I> and side defroster nozzle duct No.1.

53. REMOVE DEFROSTER NOZZLE ASSY

(a) TMC made:
Remove the 5 screws<H> and defroster nozzle assy.
(b) TMMK made:
Remove the 5 screws<G or I> and defroster nozzle assy.

54. REMOVE HEATER TO REGISTER DUCT NO.1

(a) TMC made:
Remove the 2 screws<H> and heater to register duct No.1.
(b) TMMK made:
Remove the 2 screws<G or I> and heater to register duct No.1.

55. REMOVE HEATER TO REGISTER DUCT NO.3

(a) TMC made:
Remove the 2 screws<H> and heater to register duct No.3.
(b) TMMK made:
Remove the 2 screws<G or I> and heater to register duct No.3.

56. REMOVE HEATER TO REGISTER DUCT NO.2

(a) TMC made:
Remove the screw<H> and heater to register duct No.2.
(b) TMMK made:
Remove the screw<G or I> and heater to register duct No.2.

57. REMOVE DEFROSTER NOZZLE GARNISH NO.1

(a) Disengage the 5 clips and remove the defroster nozzle garnish No.1.

58. REMOVE PIN, INSTRUMENT PANEL, NO.1

(a) TMC made:
Remove the 2 screws<H> and 2 instrument panel pin No.1.
(b) TMMK made:
Remove the 2 screws<G or I> and 2 instrument panel pin No.1.

59. REMOVE INSTR PNL PASS L/DOOR AIR BAG ASSY
(See page 60–30)

60. INSTALL INSTR PNL PASS L/DOOR AIR BAG ASSY
(See page 60–30)

61. INSTALL INSTRUMENT PANEL SAFETY PAD SUB–ASSY

(a) Engage the 5 Pins.
(b) Connect the connectors.
(c) TMC made:
Install the instrument panel safety pad sub–assy with 2 screws <H><F>, nut<L>, 4 bolts<A><E>.
(d) TMMK made:
Install the instrument panel safety pad sub–assy with 2 screws <G or I><F>, nut<K>, 3 bolts<A><E>.
Torque :
Bolt <E>: 20 N·m (200 kgf·cm, 14 ft·lbf)

TMC made:

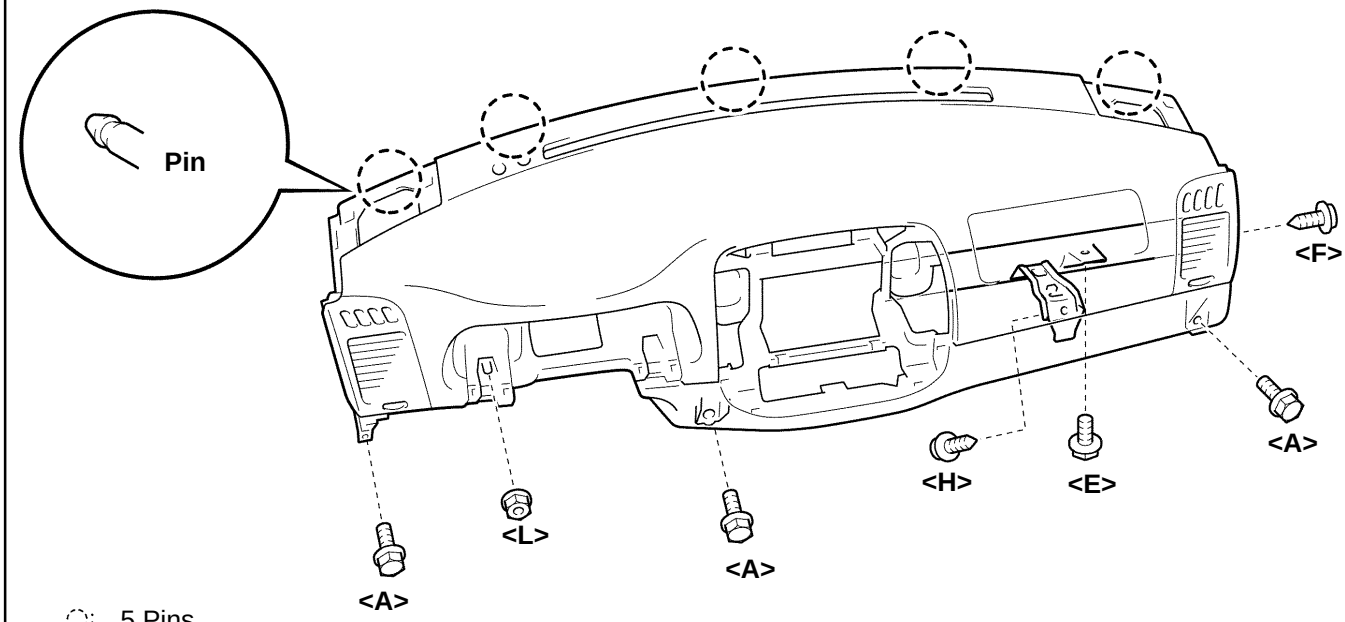

TMMK made:

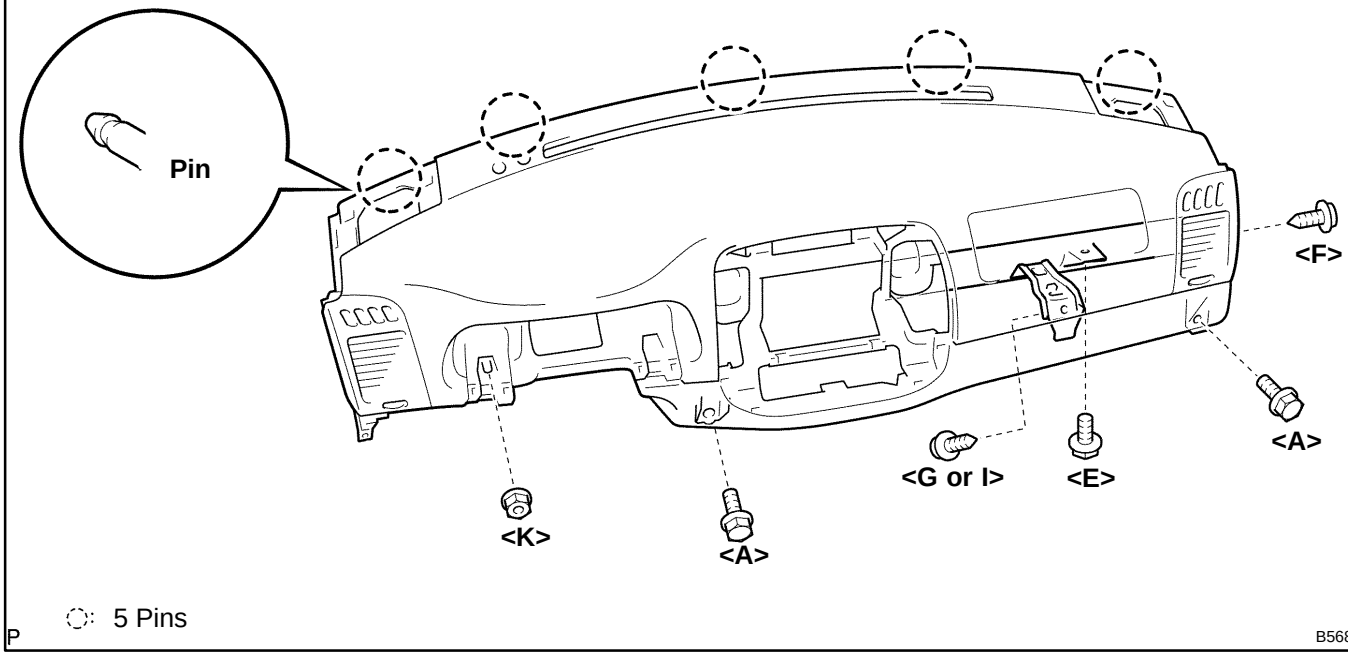

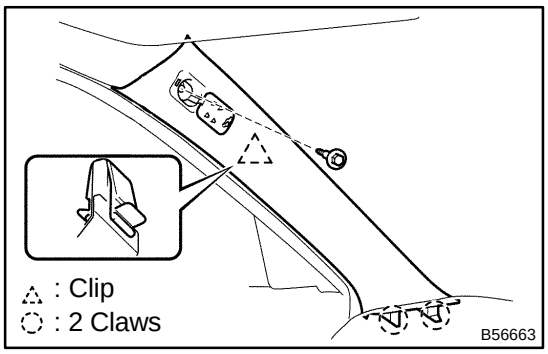

62. INSTALL FRONT PILLAR GARNISH LH(W/ CURTAIN SHIELD AIR BAG)

(a) Engage the 2 claws and clip.
(b) Install the front pillar garnish with bolt.
Torque :
7.5 – 20 N·m (76 – 204 kgf·cm, 66 – 117 in.·lbf)

63. INSTALL FRONT PILLAR GARNISH RH(W/ CURTAIN SHIELD AIR BAG)

64. CENTER SPIRAL CABLE(See page 60–25)
65. INSTALL STEERING WHEEL ASSY
(See page 50–9 or 50–22)
66. INSPECT STEERING WHEEL CENTER POINT
(See page 50–9 or 50–22)
67. INSTALL HORN BUTTON ASSY
(See page 60–15)
68. INSPECT HORN BUTTON ASSY
(See page 60–15)
69. INSPECT SRS WARNING LIGHT

COMBINATION METER ASSY

7105J–01

OVERHAUL

HINT:

COMPONENTS: See page 71–7

1. REMOVE INSTRUMENT CLUSTER FINISH PANEL
(See page 71–12)

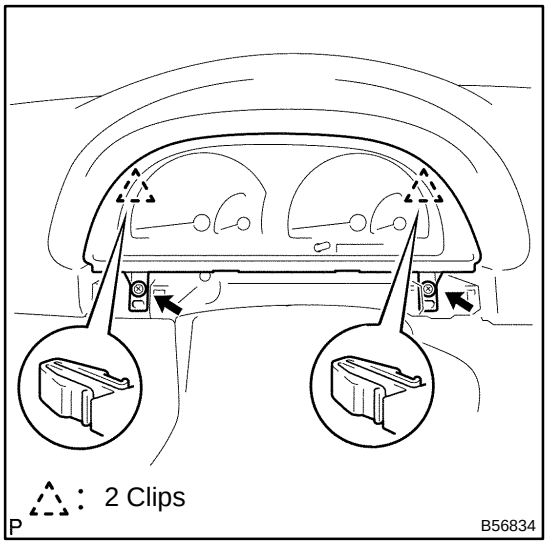

2. REMOVE COMBINATION METER ASSY

(a) Remove the 2 screws and disengage the 2 clips.
(b) Disconnect the connectors and remove the combination meter assy.

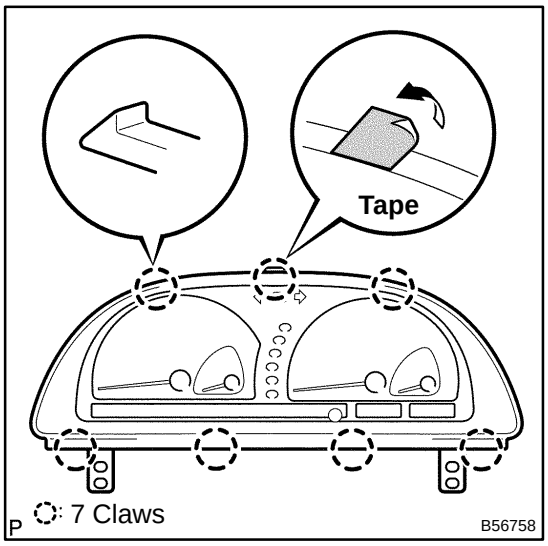

3. REMOVE COMBINATION METER GLASS

(a) Reverse the combination meter and remove the 2 screws.
(b) Remove the tape.
(c) Disengage the 7 claws and remove the combination meter glass.

CLOCK ASSY

REPLACEMENT

7105K–01

HINT:

COMPONENTS: See page 71–7

1. **REMOVE AIR CONDITIONER CONTROL ASSEMBLY(See page 71–12)**
2. **REMOVE INSTRUMENT CLUSTER FINISH PANEL SUB–ASSY CENTER (See page 71–12)**

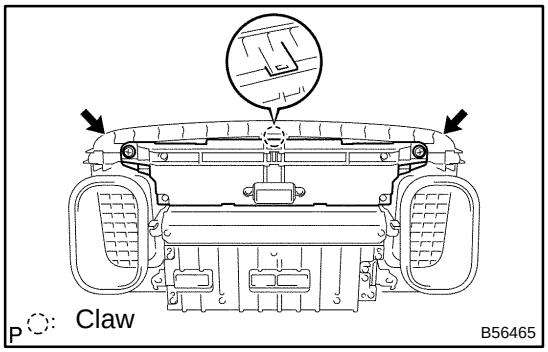

3. **REMOVE CLOCK ASSY**

(a) Remove the 2 screws.
(b) Disengage the claw and remove the clock assy.

FRONT POWER SEAT CONTROL SYSTEM

LOCATION

7206I–01

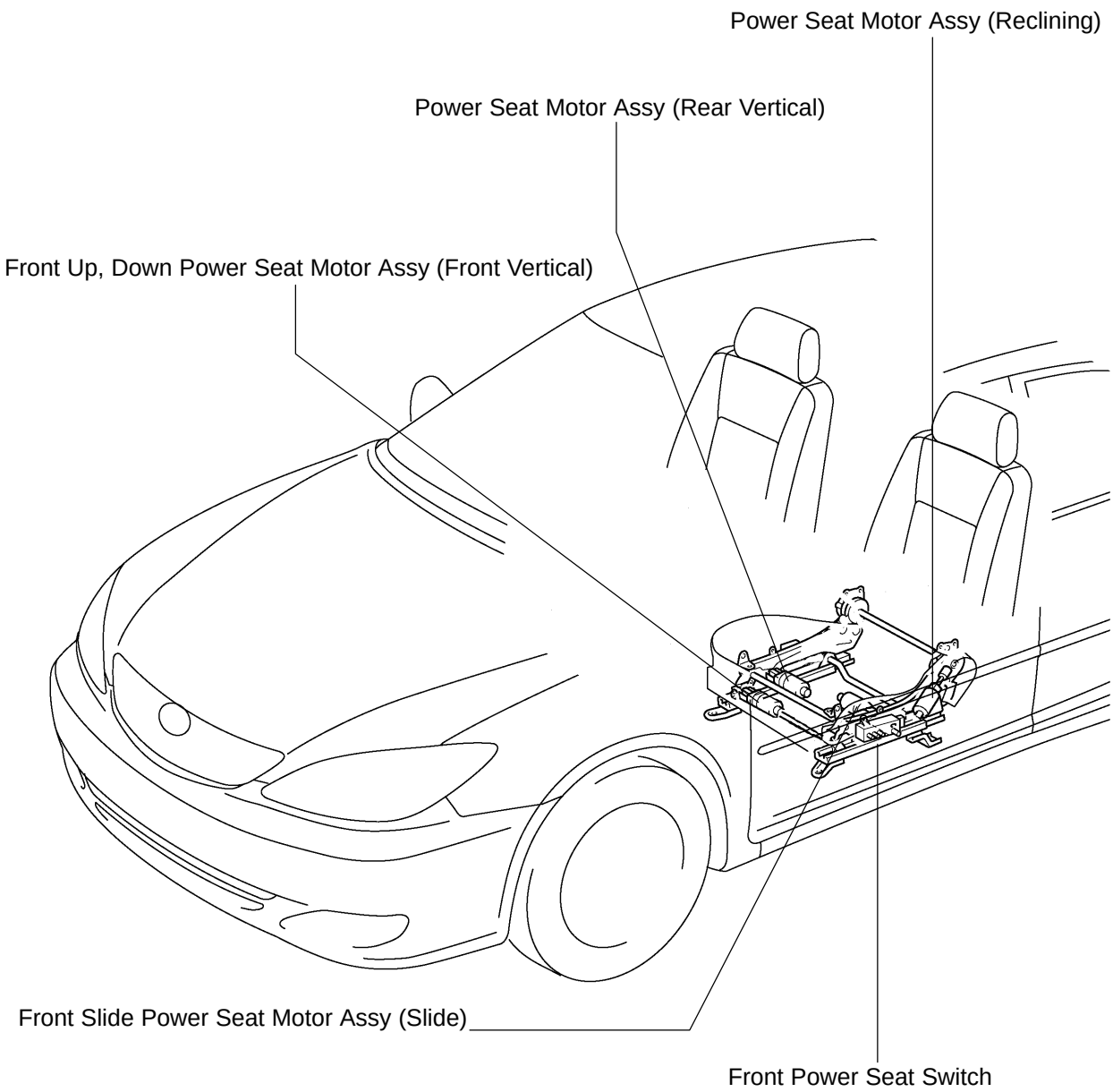

O

B57240

7206G–01

PROBLEM SYMPTOMS TABLE

Symptom	Suspected Area	See page
Power seat does not operate	1. Front power seat switch 2. PWR SEAT fuse 3. Wire harness	72–3
Power seat does not slide	1. Front power seat switch 2. Front slide power seat motor assy (Slide) 3. Wire harness	72–3 72–3
Front vertical of the power seat does not operate (Driver's seat only)	1. Front power seat switch 2. Front up, down power seat motor assy (Front vertical) 3. Wire harness	72–3 72–3
Rear lifter of the power seat does not operate (Driver's seat only)	1. Front power seat switch 2. Power seat motor assy (Rear vertical) 3. Wire harness	72–3 72–3
Power seat does not recline	1. Front power seat switch 2. Power seat motor assy (Reclining) 3. Wire harness	72–3 72–3

7206H–01

INSPECTION

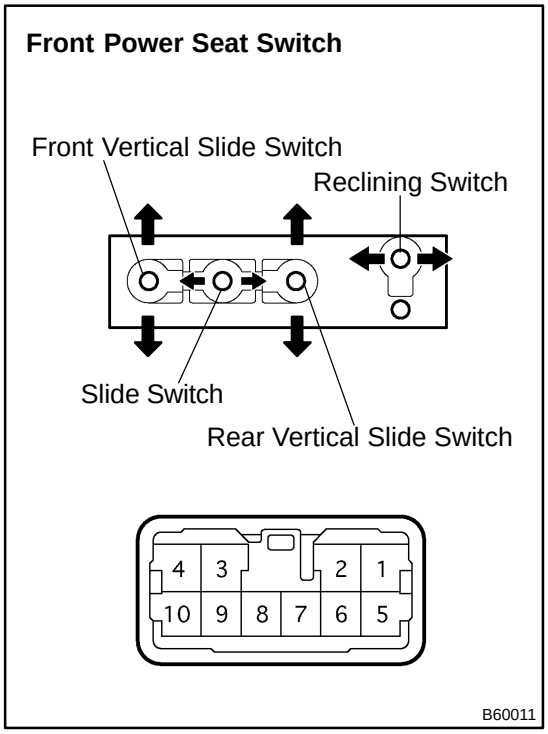

1. INSPECT FRONT POWER SEAT SWITCH LH

(a) Inspect the front power seat switch continuity.

Standard (Slide switch):

Terminal No.	Switch position	Specified condition
1 ⇔ 9 4 ⇔ 6	FRONT	Continuity
6 ⇔ 4 ⇔ 9	OFF	Continuity
4 ⇔ 9 1 ⇔ 6	REAR	Continuity

Standard (Front vertical switch):

Terminal No.	Switch position	Specified condition
1 ⇔ 10 4 ⇔ 5	UP	Continuity
5 ⇔ 4 ⇔ 10	OFF	Continuity
1 ⇔ 5 4 ⇔ 10	DOWN	Continuity

Standard (Rear vertical switch):

Terminal No.	Switch position	Specified condition
1 ⇔ 7 4 ⇔ 8	UP	Continuity
7 ⇔ 4 ⇔ 8	OFF	Continuity
1 ⇔ 8 4 ⇔ 7	DOWN	Continuity

Standard (Reclining switch):

Terminal No.	Switch position	Specified condition
1 ⇔ 3 2 ⇔ 4	FRONT	Continuity
2 ⇔ 4 ⇔ 3	OFF	Continuity
1 ⇔ 2 3 ⇔ 4	REAR	Continuity

If the result is not as specified, replace the front power switch.

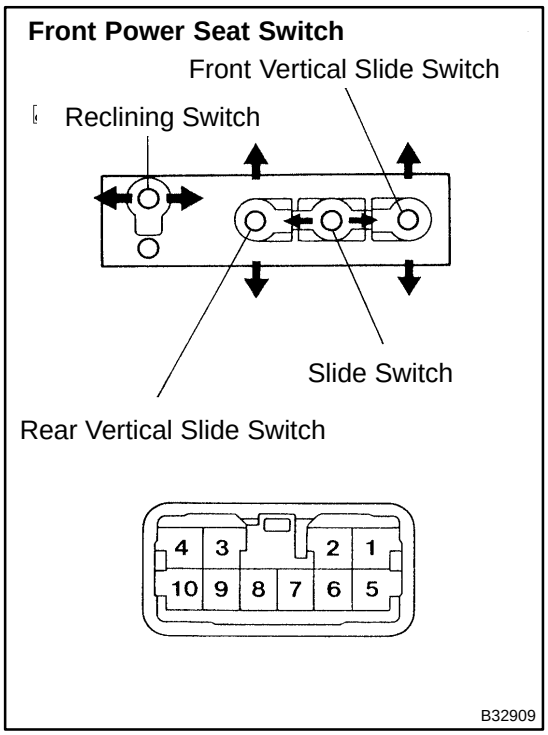

2. INSPECT FRONT POWER SEAT SWITCH RH

(a) Inspect the front power seat switch continuity.

Standard (Slide switch):

Terminal No.	Switch position	Specified condition
1 ⇔ 9 4 ⇔ 6	FRONT	Continuity
6 ⇔ 4 ⇔ 9	OFF	Continuity
4 ⇔ 9 1 ⇔ 6	REAR	Continuity

Standard (Front vertical switch):

Terminal No.	Switch position	Specified condition
1 ⇔ 5 4 ⇔ 10	UP	Continuity
5 ⇔ 4 ⇔ 10	OFF	Continuity
1 ⇔ 10 4 ⇔ 5	DOWN	Continuity

Standard (Rear vertical switch):

Terminal No.	Switch position	Specified condition
1 ⇔ 8 4 ⇔ 7	FRONT	Continuity
7 ⇔ 4 ⇔ 8	OFF	Continuity
1 ⇔ 7 4 ⇔ 8	REAR	Continuity

Standard (Reclining switch):

Terminal No.	Switch position	Specified condition
1 ⇔ 3 2 ⇔ 4	FRONT	Continuity
2 ⇔ 4 ⇔ 3	OFF	Continuity
1 ⇔ 2 3 ⇔ 4	REAR	Continuity

If the result is not as specified, replace the front power seat switch.

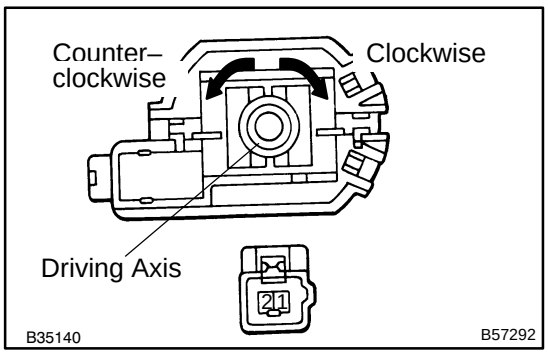

3. INSPECT FRONT UP, DOWN POWER SEAT MOTOR ASSY

(a) Inspect the front up, down power seat motor operation.

(1) Check that the motor rotates smoothly when the battery is connected to the connector terminal.

Standard:

Terminal No.	Specified Condition
Battery positive voltage ⇔ 1 Battery negative voltage ⇔ 2	Counterclockwise
Battery positive voltage ⇔ 2 Battery negative voltage ⇔ 1	Clockwise

If the result is not as specified, replace the front up, down power seat motor.

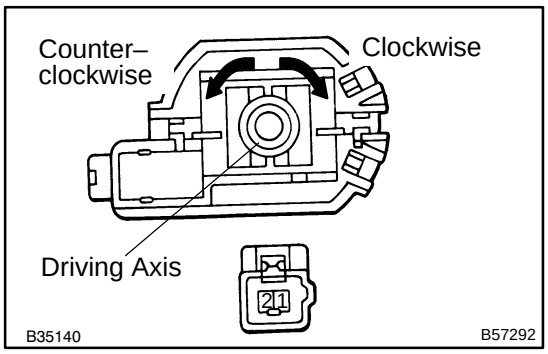

4. INSPECT POWER SEAT MOTOR ASSY

(a) Inspect the power seat motor operation.

(1) Check that the motor rotates smoothly when the battery is connected to the connector terminal.

Standard:

Tester Condition	Specified Condition
Battery positive voltage ⇔ 1 Battery negative voltage ⇔ 2	Counterclockwise
Battery positive voltage ⇔ 2 Battery negative voltage ⇔ 1	Clockwise

If the result is not as specified, replace the power seat motor.

FRONT SEAT (Power Seat for TMC Made)

COMPONENTS

7206K–01

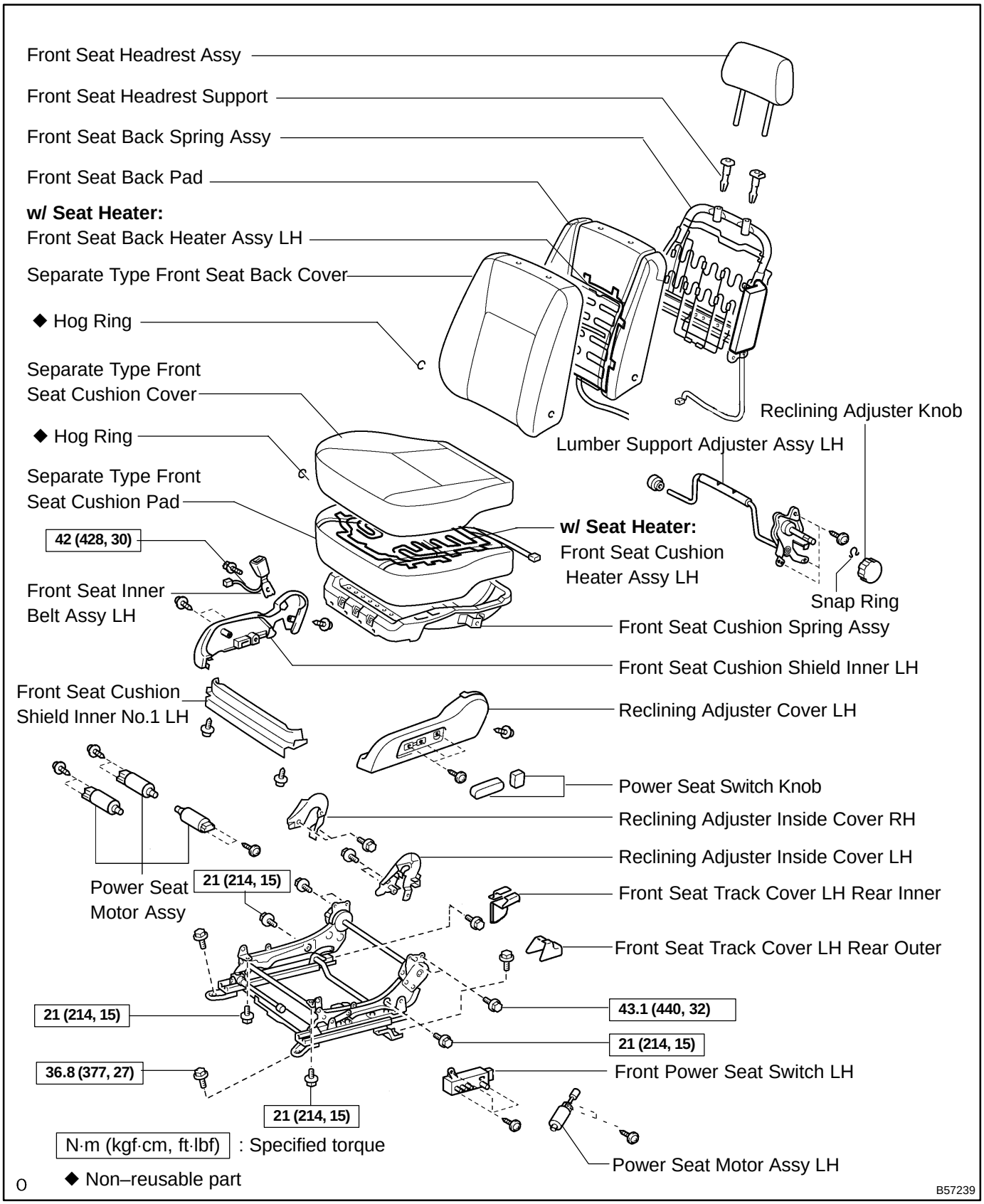

OVERHAUL

HINT:

- Installation is the revers order of the removal. But, the installation is indicated only when it has a point.
- In the RH side, work in the same procedure as in the LH side.

1. DISCONNECT BATTERY NEGATIVE TERMINAL

2. REMOVE FRONT SEAT TRACK COVER LH REAR OUTER

3. REMOVE FRONT SEAT TRACK COVER LH REAR INNER

4. REMOVE FRONT SEAT ASSY LH

HINT:

Set the front vertical in the most upper position.

(a) Remove the 4 bolts.

(b) Disconnect the connectors, and then remove the front seat assembly LH.

5. REMOVE FRONT SEAT HEADREST ASSY

6. REMOVE RECLINING POWER SEAT SWITCH KNOB

7. REMOVE SLIDE & VERTICAL POWER SEAT SWITCH KNOB

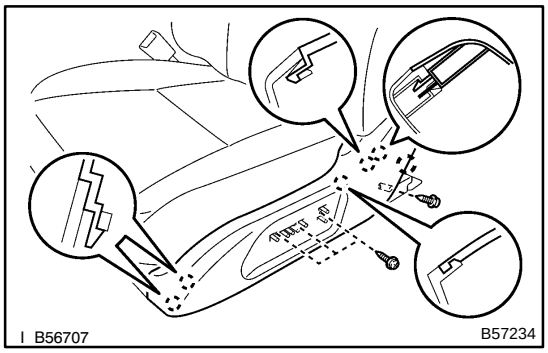

8. REMOVE RECLINING ADJUSTER COVER LH

(a) Remove the 4 screws.

(b) Disengage the claws, and then remove the reclining adjuster cover LH.

9. REMOVE FRONT POWER SEAT SWITCH LH

(a) Disconnect the connectors.

(b) Remove the 3 screws and the front power seat switch LH.

10. REMOVE FRONT SEAT INNER BELT ASSY LH

(a) Disconnect the connectors.

(b) Remove the nut and the front seat inner belt assembly LH.

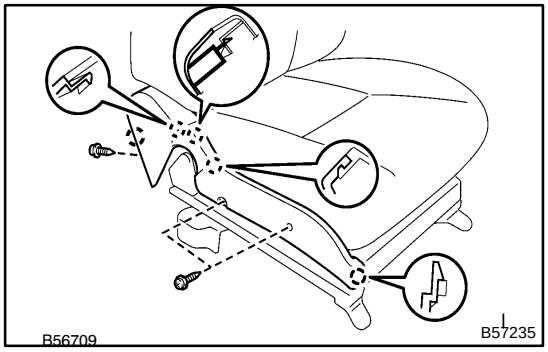

11. REMOVE FRONT SEAT CUSHION SHIELD INNER LH

(a) Remove the 3 screws.

(b) Disengage the claws and then remove the front seat cushion shield inner LH.

12. REMOVE FRONT SEAT CUSHION SHIELD INNER NO.1 LH

(a) Remove the 2 screws and the front seat cushion shield inner No.1 LH.

13. REMOVE FRONT SEAT CUSHION ASSY

(a) Disconnect the clamps and connectors of each wire harness.

(b) Remove the 4 bolts and the front seat cushion assembly LH.

14. REMOVE SEPARATE TYPE FRONT SEAT CUSHION COVERLH

(a) Remove the hog rings and the front seat cushion cover LH.

15. REMOVE FRONT SEAT CUSHION HEATER ASSY LH (W/ SEAT HEATER)

(a) Cut off the tack pins which fasten the seat heater, and then remove the front seat heater assembly from the cushion cover.

NOTICE:

Be careful not to damage the seat cushion cover.

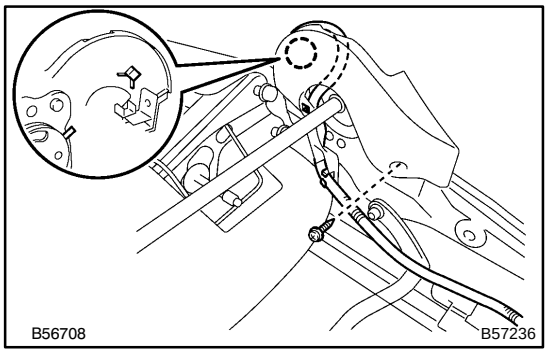

16. REMOVE FRONT SEAT BACK ASSY

(a) Remove the hog rings at the lower portion of the front seat back cover.

(b) Remove the 4 bolts from the front seat back.

(c) Remove the 2 screws and reclining adjuster inside cover RH.

(d) w/ Side airbag:
Disconnect the wire harness of the side airbag from the inside cover LH.

(e) Remove the front seat back assembly.

(f) Remove the 2 screws and the reclining adjuster inside cover LH.

17. REMOVE RECLINING ADJUSTER KNOB

(a) Using a cloth or something, remove the snap rings and the lumber support adjusting knob.

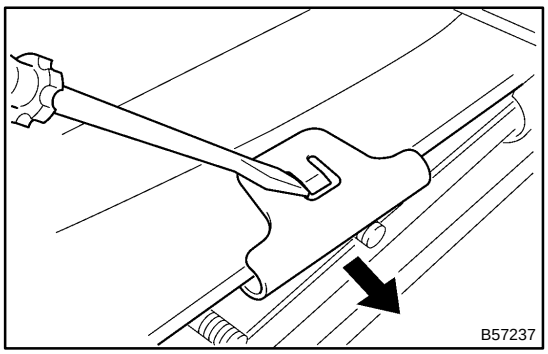

18. REMOVE SEPARATE TYPE FRONT SEAT BACK COVER

(a) Turn up the front seat back cover.

(b) w/ Side airbag:
Using a screwdriver, disengage the front seat back cover bracket .

HINT:

Tape the screwdriver tip before use.

(c) Remove the 2 headrest supports, and the front seat back cover LH from the front seat back frame.

(d) Remove the hog rings, and front seat back cover from the seat back pad.

19. REMOVE FRONT SEAT BACK HEATER ASSY LH (W/ SEAT HEATER)

(a) Cut off the tack pins which fasten the seat heater, and then remove the front seat heater assembly LH from the front seat back cover.

NOTICE:

Be careful not to damage the seat back cover.

20. REMOVE LUMBAR SUPPORT ADJUSTER ASSY LH

(a) Remove the 3 screws and the lumber support adjuster assembly LH.

21. REMOVE POWER SEAT MOTOR

(a) Remove the 2 screws each to remove the sliding motor, reclining motor, front vertical motor and rear lifter motor.

22. INSTALL FRONT SEAT BACK HEATER ASSY LH (W/ SEAT HEATER)

(a) Set the seat heater to the seat back cover.

(b) Install the front seat heater assembly to the seat back cover with the 8 tack pins.

NOTICE:

- **Do not substitute other metal parts for tack pins.**

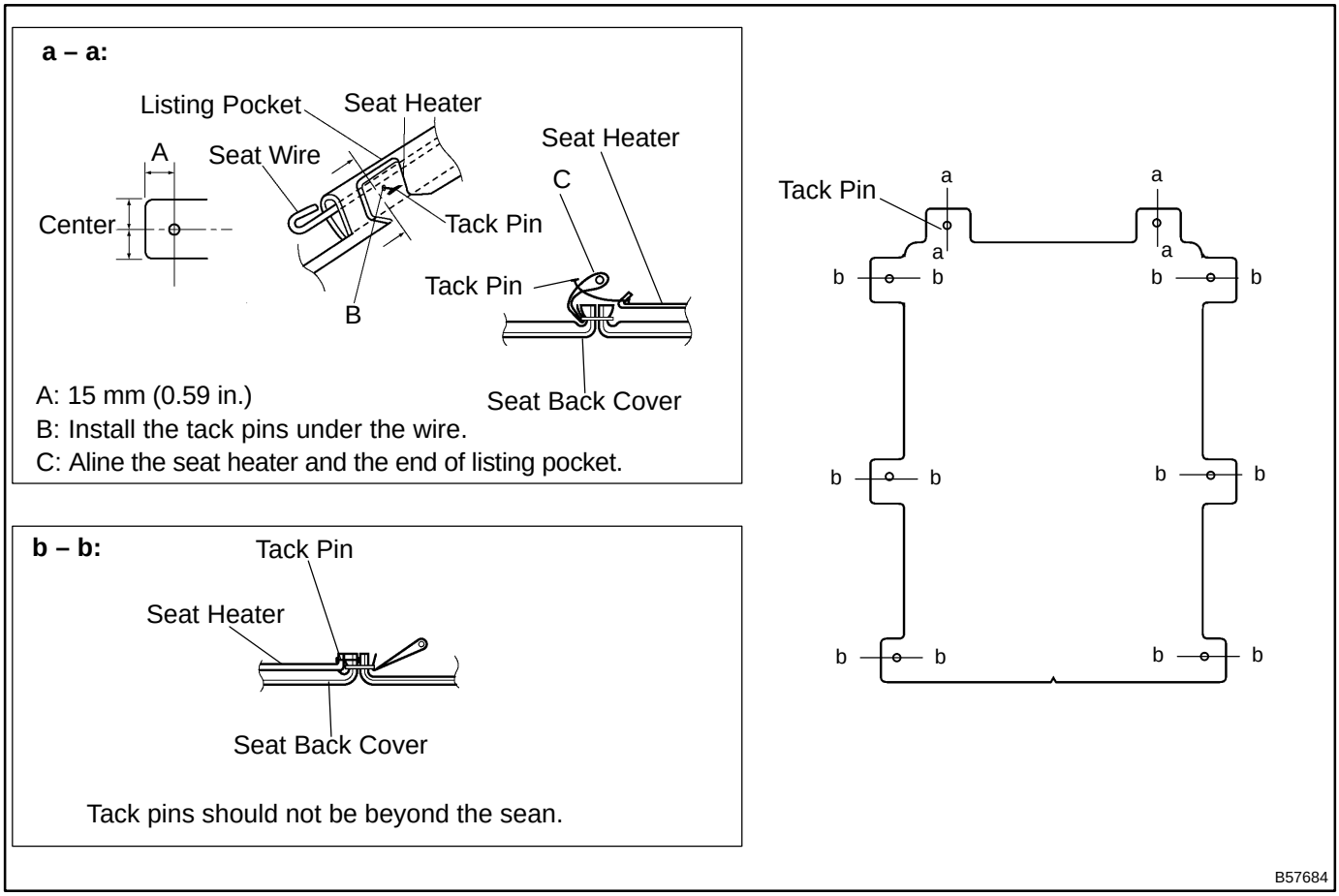

23. INSTALL SEPARATE TYPE FRONT SEAT BACK COVER

NOTICE:

- **For a vehicle with side airbag, if the seat back cover has damage, the side airbag may not activate normally, and therefore it is necessary to replace the seat back cover.**
- **For a vehicle with side airbag, if the side airbag has damage replace the pad and the frame with new ones.**
- **For a vehicle with side airbag, the side airbag may not activate normally unless the seat back cover is securely installed, as shown in the following procedures.**

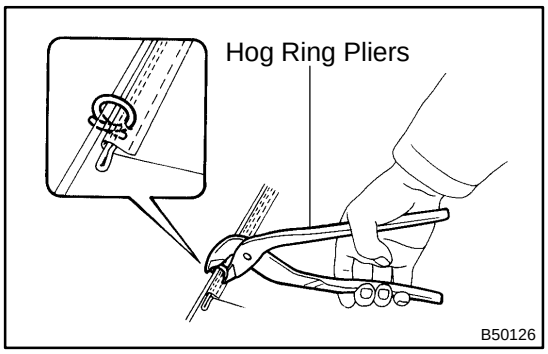

(a) Using hog ring pliers, install the front seat back cover LH with new hog rings to the front seat back pad LH.
(b) Using hog ring pliers, install the front seat back cover LH and pad LH with new hog ring to the front seat frame LH.

NOTICE:
- **Be careful not to damage the cover.**
- **When installing the hog rings, take care to prevent wrinkles as little as possible.**

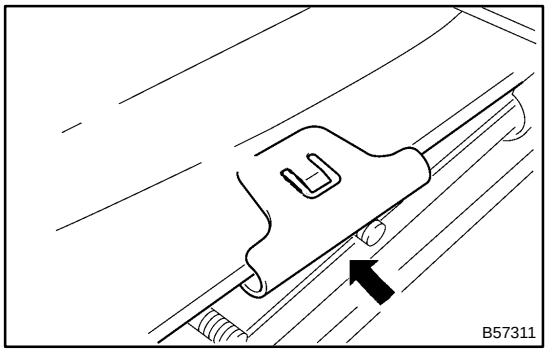

(c) w/ Side airbag:
Install the seat back cover bracket.

NOTICE:
- **For a vehicle with side airbag, the side airbag may not activate normally unless the seat back cover is securely installed.**
- **Check that the strap has no twist after installing the bracket.**

24. INSTALL FRONT SEAT BACK ASSY

(a) Install the front seat back assembly with the 4 bolts.
Torque: 43 N·m (440 kgf·cm, 32 ft·lbf)

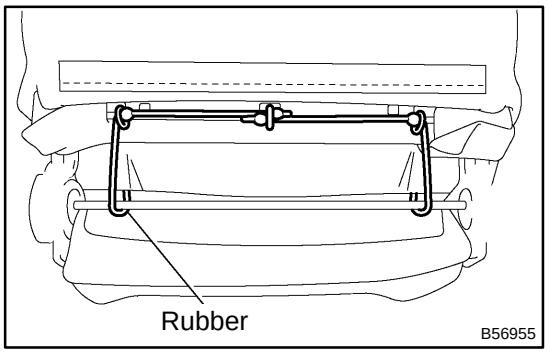

(b) As shown in the illustration, attach a rubber with new hog rings.
(c) Using hog ring pliers, install new hog rings.

NOTICE:
- **Be careful not to damage the cover.**
- **When installing the hog rings, take care to prevent wrinkles as little as possible.**

25. INSTALL RECLINING ADJUSTER KNOB

26. INSTALL FRONT SEAT CUSHION HEATER ASSY LH (W/ SEAT HEATER)

(a) Set the seat heater to the seat cushion cover.
(b) Install the seat heater to the seat cushion cover with the 24 tack pins.

NOTICE:
Do not substitute other metal parts for tack pins.

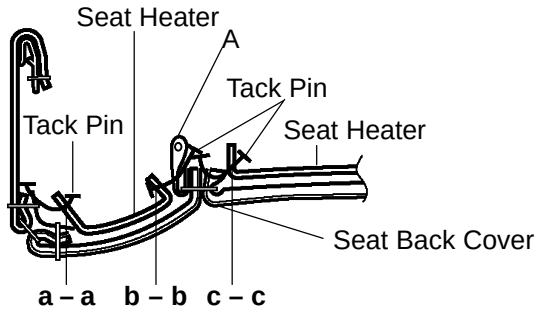

a – a, c – c:

Tack pins should not be beyond the sean.

b – b:

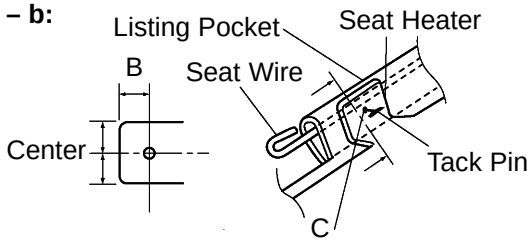

A: Install the tack pins under the wire.
B: 15 mm (0.59 in.)
C: Aline the seat heater and the end of listing pocket.

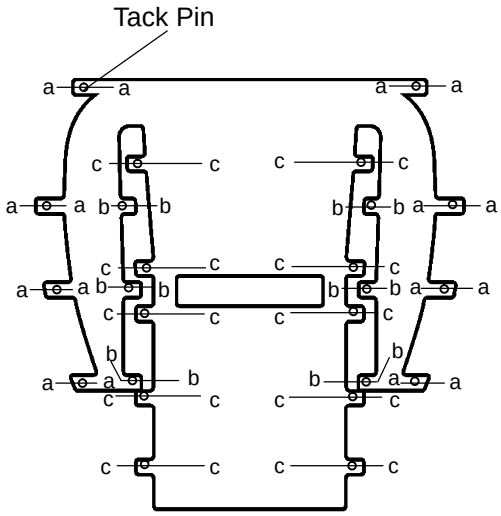

B57686

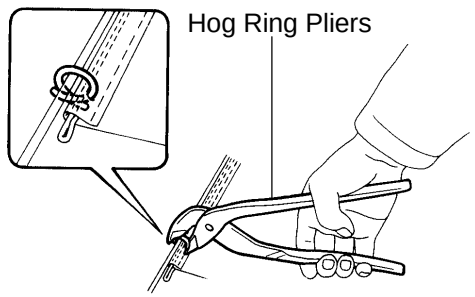

B50126

27. INSTALL SEPARATE TYPE FRONT SEAT CUSHION COVER

(a) Using hog ring pliers, install the front seat cushion cover LH with new hog rings to the front seat cushion pad LH.

NOTICE:

- **Be careful not to damage the cover.**
- **When installing the hog rings, take care to prevent wrinkles as little as possible.**

28. INSTALL FRONT SEAT CUSHION ASSY

(a) Install the front seat cushion assembly with the 4 bolts.

(b) w/ Side airbag:
Install the wire harness clamps of the side airbag through the seat cushion cover end.

(c) Install the wire harness to the seat cushion frame with a band clamp.

29. INSTALL FRONT SEAT INNER BELT ASSY LH

(a) Install the front seat inner belt assembly LH with the bolt.
Torque: 42 N·m (420 kgf·cm, 31 ft·lbf)

30. INSTALL FRONT SEAT ASSY LH

(a) Set the front seat assembly LH to the body.

NOTICE:

Be careful not to damage the cover.

(b) Install the front seat assembly LH with the 4 bolts.

Torque: 36.8 N·m (377 kgf·cm, 27 ft·lbf)

NOTICE:

Check that the seat adjuster locked.

FRONT SEAT (Power Seat for TMMK Made)

COMPONENTS

7206M–01

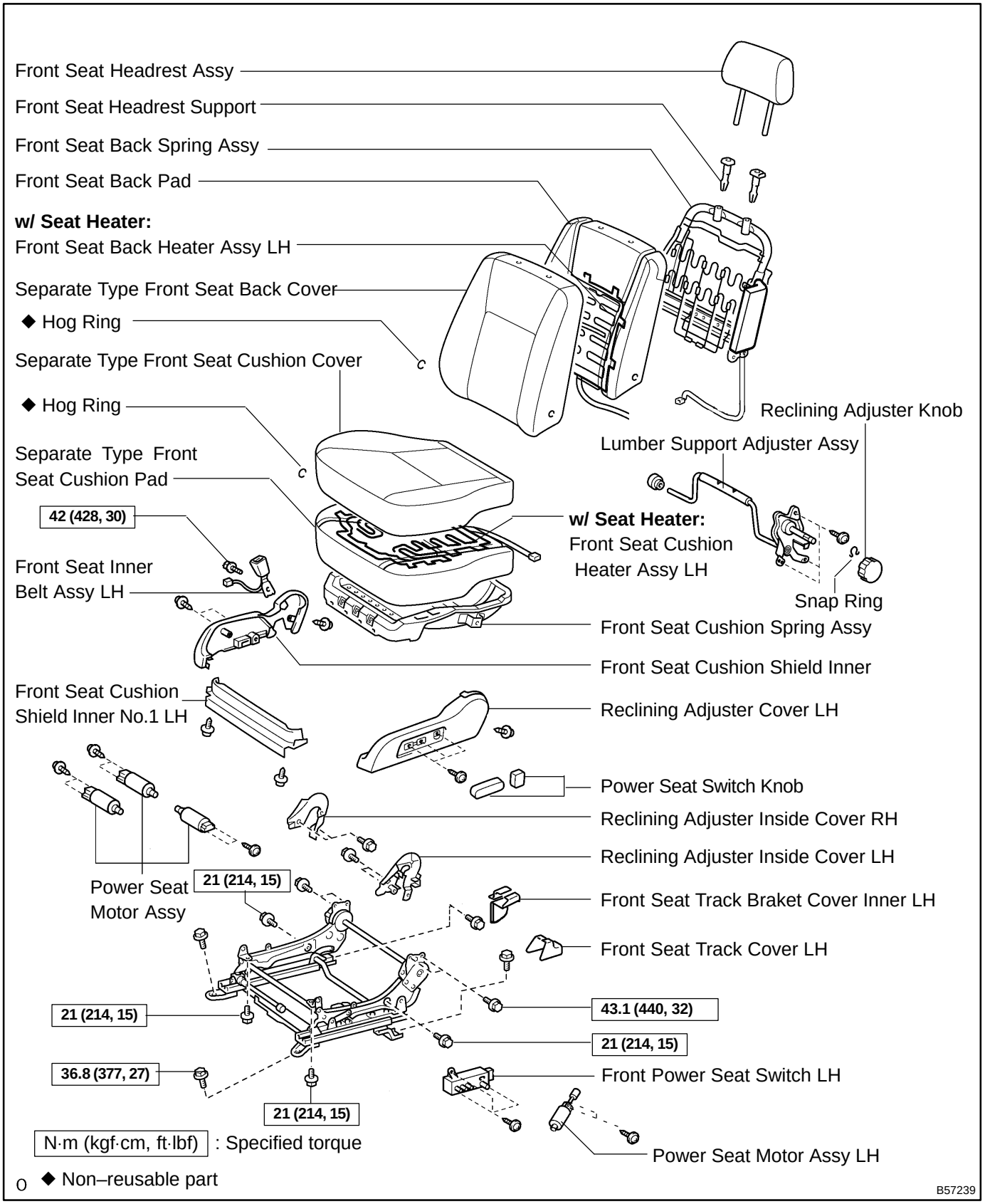

OVERHAUL

HINT:

- Installation is the revers order of the removal. But, the installation is indicated only when it has a point.
- In the RH side, work in the same procedure as in the LH side.

1. DISCONNECT BATTERY NEGATIVE TERMINAL

2. REMOVE SEAT TRACK COVER LH

3. REMOVE SEAT TRACK BRACKET COVER INNER LH

4. REMOVE FRONT SEAT ASSY LH

HINT:

Set the front vertical in the most upper position.

(a) Remove the 4 bolts.

(b) Disconnect the connectors, and then remove the front seat assembly LH.

5. REMOVE FRONT SEAT HEADREST ASSY

6. REMOVE RECLINING POWER SEAT SWITCH KNOB

7. REMOVE SLIDE & VERTICAL POWER SEAT SWITCH KNOB

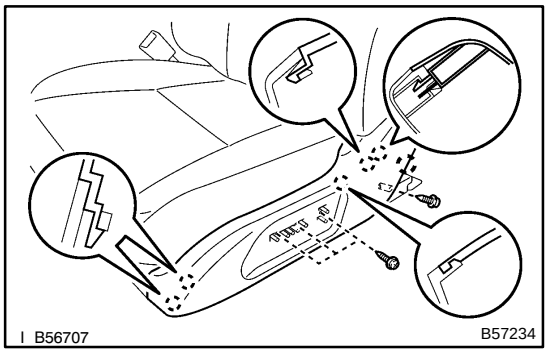

8. REMOVE RECLINING ADJUSTER COVER LH

(a) Remove the 4 screws.

(b) Disengage the claws, and then remove the front seat cushion shield LH.

9. REMOVE FRONT POWER SEAT SWITCH LH

(a) Disconnect the connectors.

(b) Remove the 3 screws and the front power seat switch LH.

10. REMOVE FRONT SEAT INNER BELT ASSY LH

(a) Disconnect the connectors.

(b) Remove the nut and the front seat inner belt assembly LH.

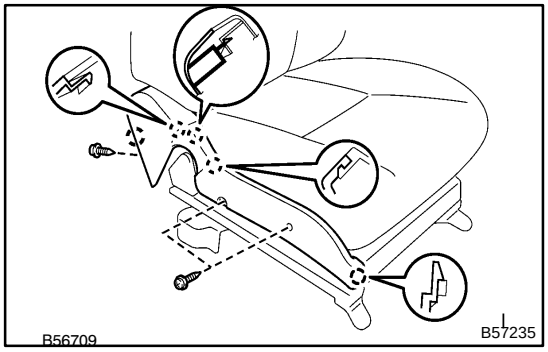

11. REMOVE FRONT SEAT CUSHION SHIELD INNER LH

(a) Remove the 3 screws.

(b) Disengage the claws and then remove the front seat cushion shield inner LH.

12. REMOVE FRONT SEAT CUSHION SHIELD INNER NO.1 LH

(a) Remove the 2 screws and the front seat cushion shield inner No.1 LH.

13. REMOVE FRONT SEAT CUSHION ASSY

(a) Disconnect the clamps and connectors of each wire harness.

(b) Remove the 4 bolts and front seat cushion assembly LH.

14. REMOVE SEPARATE TYPE FRONT SEAT CUSHION COVER

(a) Remove the hog rings and the front seat cushion cover LH.

15. REMOVE FRONT SEAT CUSHION HEATER ASSY LH (W/ SEAT HEATER)

(a) Cut off the tack pins which fasten the seat heater, and then remove the front seat heater assembly LH from the cushion cover.

NOTICE:

Be careful not to damage the seat cushion cover.

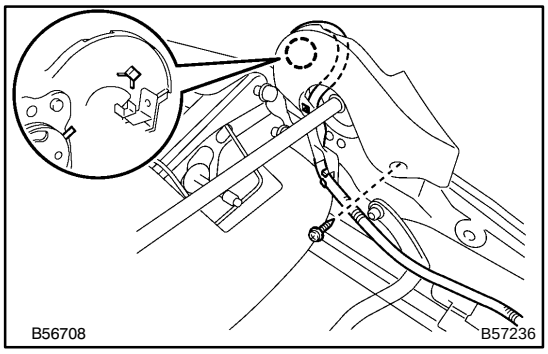

16. REMOVE FRONT SEAT BACK ASSY

(a) Remove the hog rings at the lower portion of the front seat back cover.

(b) Remove the 4 bolts from the front seat back assembly LH.

(c) Remove the 2 screws and reclining adjuster inside cover RH.

(d) w/ Side airbag:
Disconnect the wire harness of the side airbag from the inside cover LH.

(e) Remove the front seat back assembly LH.

(f) Remove the 2 screws and the reclining adjuster inside cover LH.

17. REMOVE RECLINING ADJUSTER KNOB

(a) Using a cloth or something, remove the snap rings and the lumber support adjusting knob.

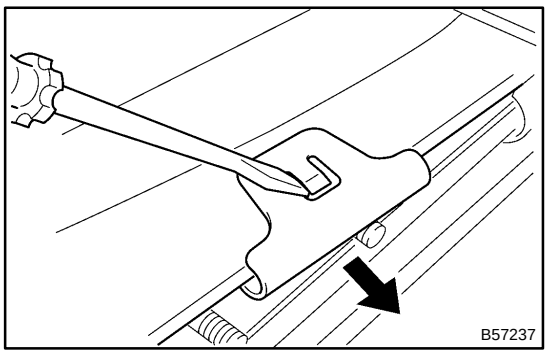

18. REMOVE SEPARATE TYPE FRONT SEAT BACK COVER

(a) Turn up the cover.

(b) w/ Side airbag:
Using a screwdriver, disengage the seat back cover bracket.

HINT:

Tape the screwdriver tip before use.

(c) Remove the 2 headrest supports, and take away the front seat back cover LH from the seat back frame.

(d) Remove the hog rings, and take away front seat back cover from the seat back pad.

19. REMOVE FRONT SEAT BACK HEATER ASSY LH (W/ SEAT HEATER)

(a) Cut off the tack pins which fasten the seat heater, and then remove the front seat heater assembry LH from the seat back cover.

NOTICE:

Be careful not to damage the seat back cover.

20. REMOVE NO.3 SEAT RECLINING ADJUSTER ASSY LH

(a) Remove the 3 screws and the No.3 seat reclining adjuster assembly LH.

21. REMOVE POWER SEAT MOTOR

(a) Remove the 2 screws each to remove the sliding motor, reclining motor, front vertical motor and rear lifter motor.

22. INSTALL FRONT SEAT BACK HEATER ASSY LH (W/ SEAT HEATER)

(a) Set the seat heater to the seat back cover.

(b) Install the front seat heater assembly to the seat back cover with the 8 tack pins.

NOTICE:

- **Do not substitute other metal parts for tack pins.**

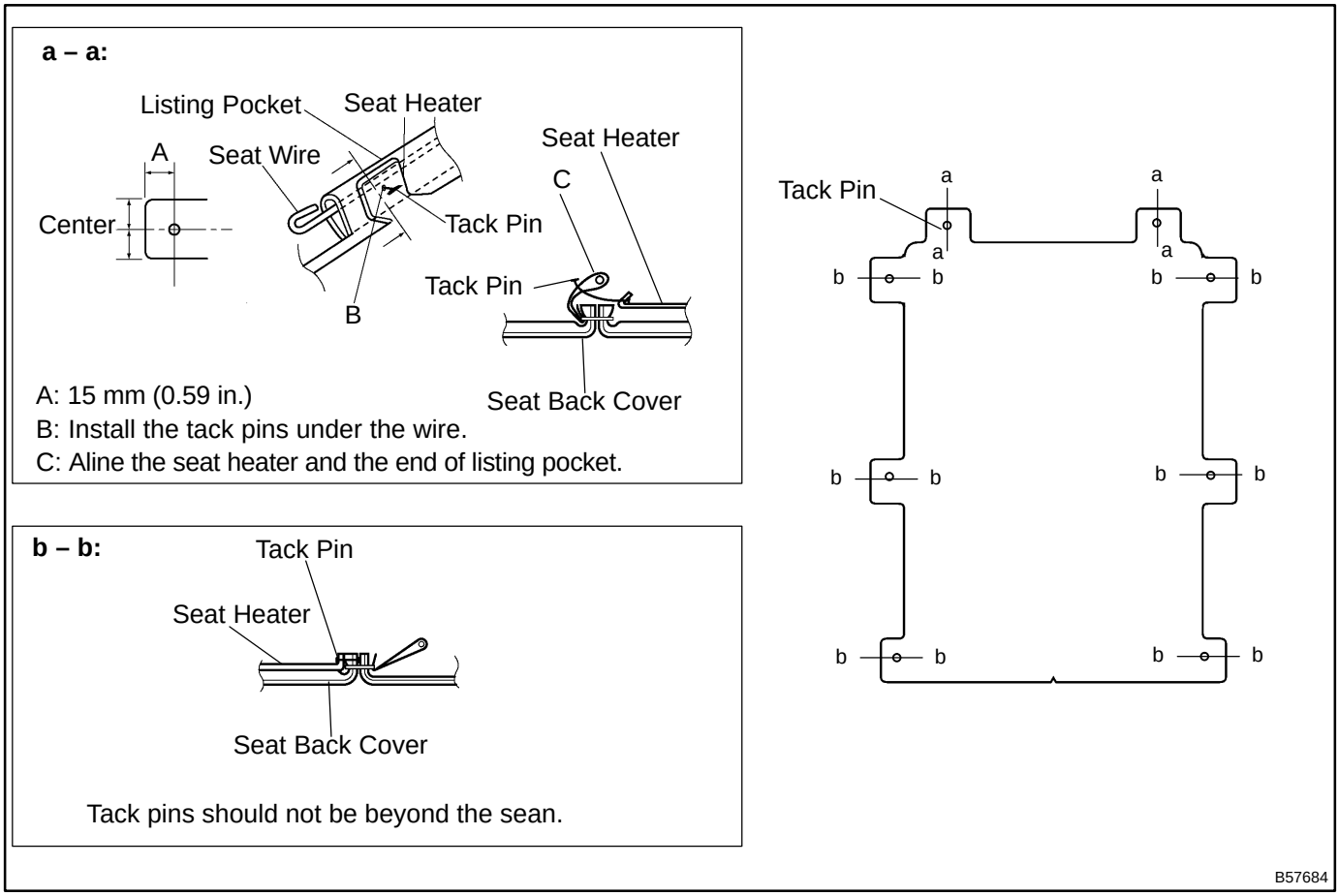

23. INSTALL SEPARATE TYPE FRONT SEAT BACK COVER

NOTICE:

- **For a vehicle with side airbag, if the seat back cover has damage, the side airbag may not activate normally, and therefore it is necessary to replace the seat back cover.**
- **For a vehicle with side airbag, if the side airbag has damage replace the pad and the frame with new ones.**
- **For a vehicle with side airbag, the side airbag may not activate normally unless the seat back cover is securely installed, as shown in the following procedures.**

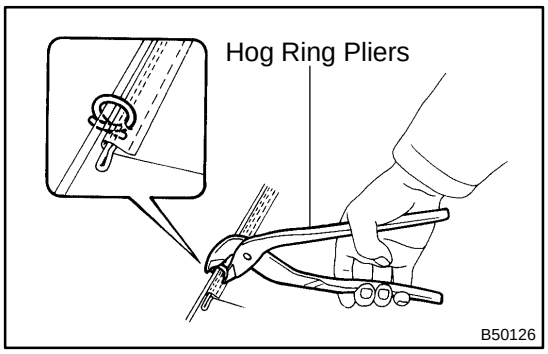

(a) Using hog ring pliers, install the front seat back cover LH with new hog rings to the front seat back pad LH.
(b) Using hog ring pliers, install the front seat back cover LH and pad LH with new hog ring to the front seat frame LH.

NOTICE:
- **Be careful not to damage the cover.**
- **When installing the hog rings, take care to prevent wrinkles as little as possible.**

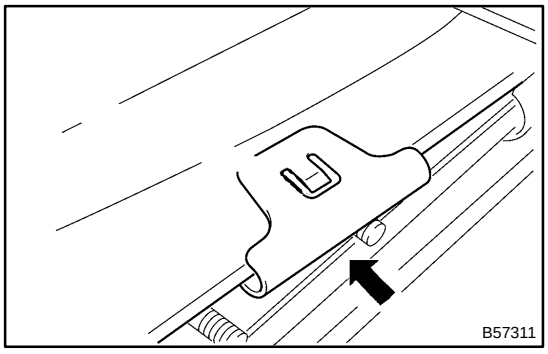

(c) w/ Side airbag:
Install the seat back cover bracket.

NOTICE:
- **For a vehicle with side airbag, the side airbag may not activate normally unless the seat back cover is securely installed.**
- **Check that the strap has no twist after installing the bracket.**

24. INSTALL FRONT SEAT BACK ASSY

(a) Install the front seat back assembly with the 4 bolts.
Torque: 43 N·m (440 kgf·cm, 32 ft·lbf)

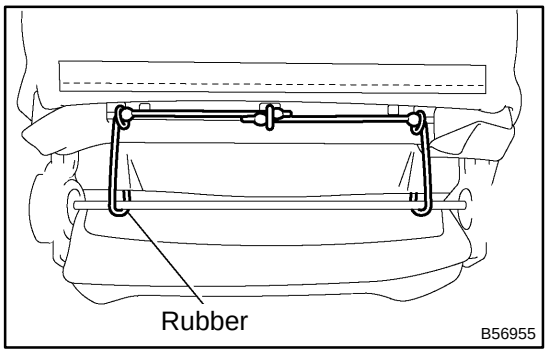

(b) As shown in the illustration, attach a rubber with new hog rings.
(c) Using hog ring pliers, install new hog rings.

NOTICE:
- **Be careful not to damage the cover.**
- **When installing the hog rings, take care to prevent wrinkles as little as possible.**

25. INSTALL RECLINING ADJUSTER KNOB

26. INSTALL FRONT SEAT CUSHION HEATER ASSY LH (W/ SEAT HEATER)

(a) Set the seat heater to the seat cushion cover.
(b) Install the front seat heater assembly LH to the seat cushion cover with the 24 tack pins.

NOTICE:

Do not substitute other metal parts for tack pins.

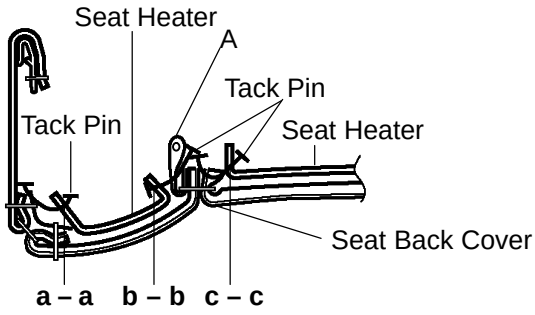

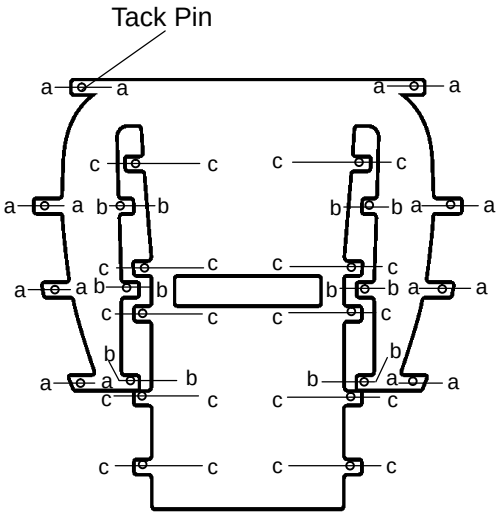

a – a, c – c:

Tack pins should not be beyond the sean.

b – b:

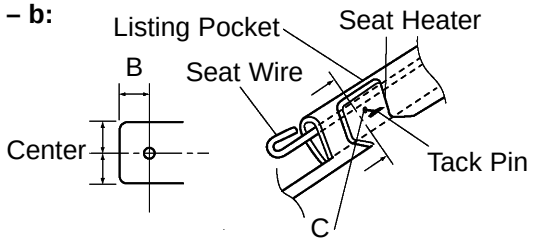

A: Install the tack pins under the wire.
B: 15 mm (0.59 in.)
C: Aline the seat heater and the end of listing pocket.

B57686

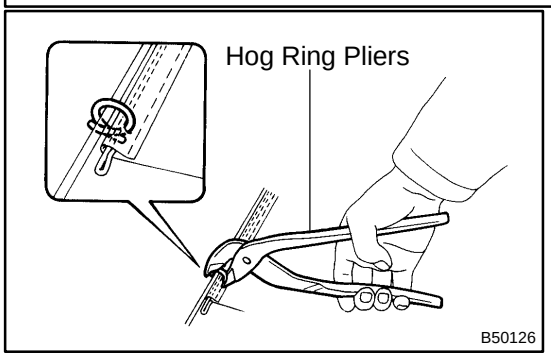

27. INSTALL SEPARATE TYPE FRONT SEAT CUSHION COVER

(a) Using hog ring pliers, install the front seat cushion cover LH with new hog rings to the front seat cushion pad LH.

(b) Using hog ring pliers, install the front seat cushion cover LH and pad LH with new hog ring to the front seat frame LH.

NOTICE:

- **Be careful not to damage the cover.**
- **When installing the hog rings, take care to prevent wrinkles as little as possible.**

28. INSTALL FRONT SEAT CUSHION ASSY

(a) Install the front seat cushion assembly with the 4 bolts.

(b) w/ Side airbag: Install the wire harness clamps of the side airbag through the seat cushion cover end.

(c) Install the wire harness to the seat cushion frame with a band clamp.

29. INSTALL FRONT SEAT INNER BELT ASSY LH

(a) Install the front seat inner belt assembly LH with the bolt.

Torque: 42 N·m (420 kgf·cm, 31 ft·lbf)

30. INSTALL FRONT SEAT ASSY LH

(a) Set the front seat assembly LH to the vehicle.

NOTICE:

Be careful not to damage the cover.

(b) Install the front seat assembly LH temporarily with the 4 bolts.

Torque: 36.8 N·m (377 kgf·cm, 27 ft·lbf)

NOTICE:

Check that the seat adjuster locked.

FRONT SEAT (Manual Seat for TMC Made)

COMPONENTS

7206N–01

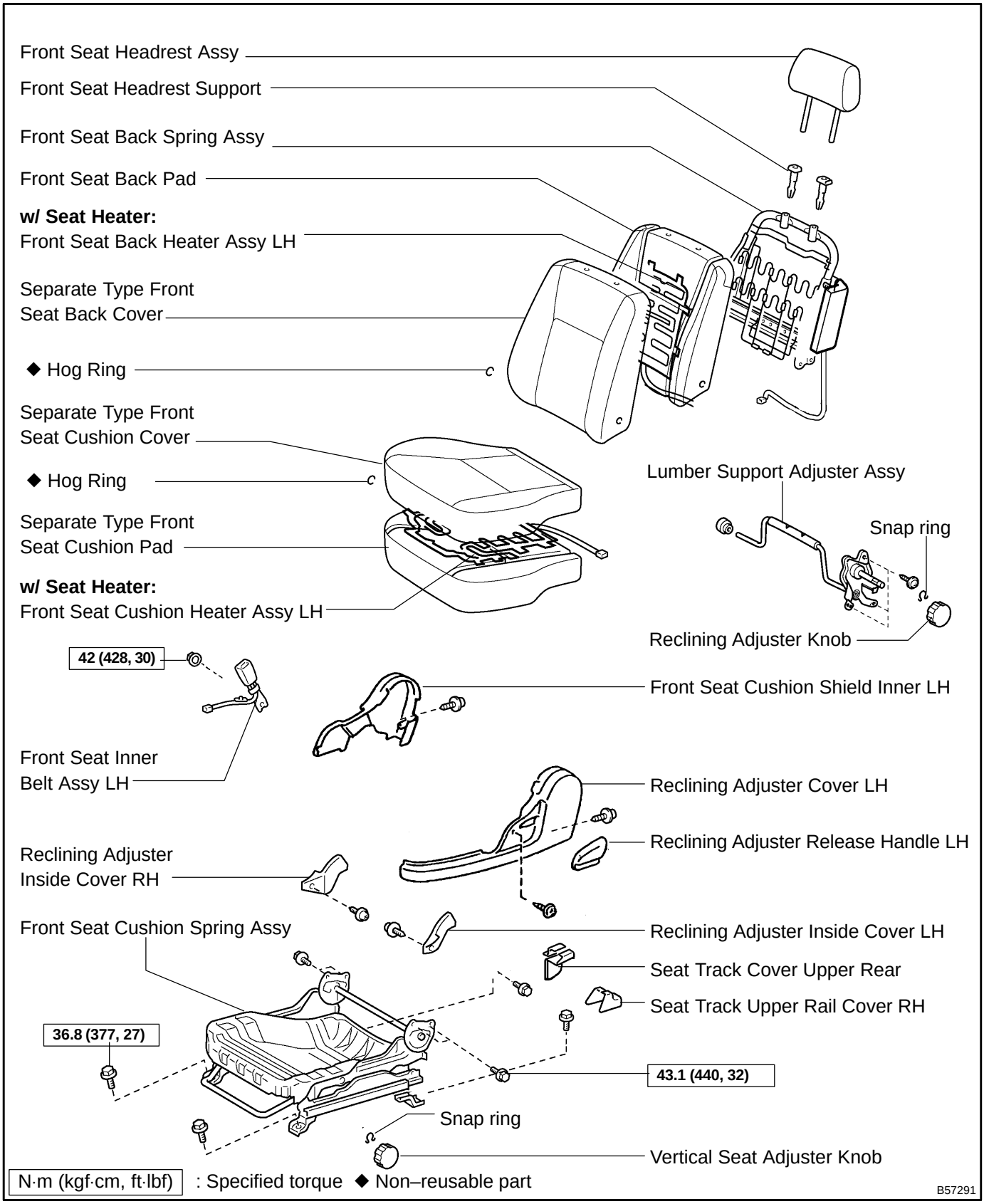

7206O–01

OVERHAUL

HINT:

- Installation is the revers order of the removal. But, the installation is indicated only when it has a point.
- In the RH side, work in the same procedure as in the LH side.

1. DISCONNECT BATTERY NEGATIVE TERMINAL

2. REMOVE FRONT SEAT TRACK COVER LH REAR OUTER

3. REMOVE FRONT SEAT TRACK COVER LH REAR INNER

4. REMOVE FRONT SEAT ASSY LH

(a) Remove the 4 bolts.

(b) Disconnect the connectors, and then remove the front seat assembly LH.

5. REMOVE FRONT SEAT HEADREST ASSY

6. REMOVE VERTICAL SEAT ADJUSTER KNOB

(a) Using a cloth or something, remove the snap rings and the vertical seat adjusting knob.

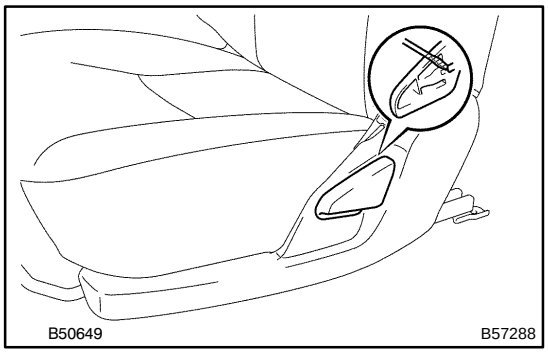

7. REMOVE RECLINING ADJUSTER RELEASE HANDLE LH

(a) Using a screwdriver, remove the reclining adjuster release handle LH.

HINT:

Tape the screwdriver tip before use.

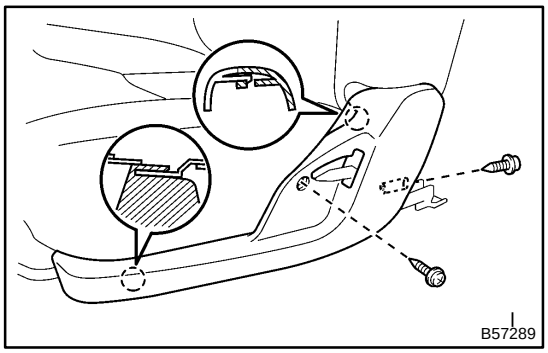

8. REMOVE RECLINING ADJUSTER COVER LH

(a) Remove the 2 screws.

(b) Disengage the claws, and then remove the reclining adjuster cover LH.

9. REMOVE FRONT SEAT INNER BELT ASSY LH

(a) Disconnect the connector.

(b) Remove the nut and the front seat inner belt assembly LH.

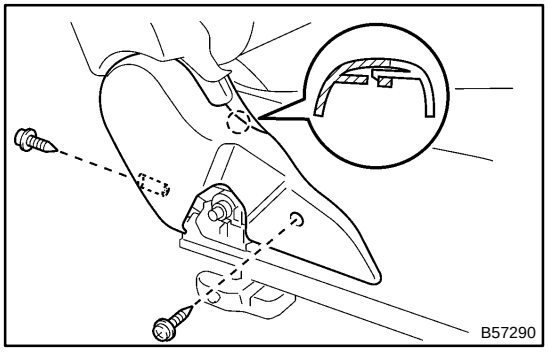

10. REMOVE FRONT SEAT CUSHION SHIELD INNER LH

(a) Remove the 2 screws.

(b) Disengage the claws and the front seat cushion shield inner LH.

11. REMOVE FRONT SEAT BACK ASSY

(a) Remove the hog rings at the lower portion of the seat back cover.

(b) w/ Side air bag:
Disconnect the wire harness of the side airbag from the seat cushion.

(c) Remove the 4 bolts and the front seat back assembly LH.

12. REMOVE RECLINING ADJUSTER KNOB

(a) Using a cloth or something, remove the snap rings and the reclining adjusting knob.

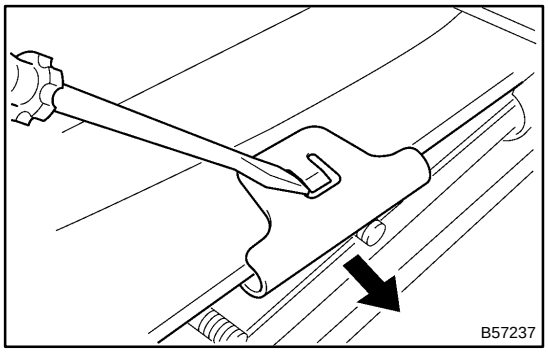

13. REMOVE SEPARATE TYPE FRONT SEAT BACK COVER

(a) Turn up the cover.

(b) w/ Side airbag:
Using a screwdriver, disengage the seat back cover bracket.

(c) Disengage the claws to remove the 2 headrest supports, and then take away the front seat cover LH from the pad spring.

(d) Remove the hog rings, and then take away the cover from the pad.

14. REMOVE FRONT SEAT BACK HEATER ASSY LH (W/ SEAT HEATER)

(a) Cut off the tack pins which fasten the seat heater, and then remove the front seat back heater assembly LH from the cushion cover.

NOTICE:

Be careful not to damage the seat cushion cover.

15. REMOVE SEPARATE TYPE FRONT SEAT CUSHION COVER

(a) Disengage the hook, and remove the front seat cushion cover together with the front cushion spring.

(b) Remove the hog ring, and take away the front seat cushion cover from the front cushion pad.

16. REMOVE FRONT SEAT CUSHION HEATER ASSY LH (W/ SEAT HEATER)

(a) Cut off the tack pins which fasten the seat heater, and then remove the front seat heater assembly LH from the seat cushion cover.

NOTICE:

Be careful not to damage the seat back cover.

17. REMOVE RECLINING ADJUSTER INSIDE COVER LH

(a) Remove the 2 screws and the reclining adjuster inside cover LH.

(b) Employ the same manner described above to the other side.

18. REMOVE RECLINING ADJUSTER INSIDE COVER RH

19. INSTALL FRONT SEAT CUSHION HEATER ASSY LH (W/ SEAT HEATER)

(a) Set the seat heater to the seat cushion cover.

(b) Install the front seat cusion heater assembly LH to the seat cushion cover with the 24 tack pins.

NOTICE:

Do not substitute other metal parts for tack pins.

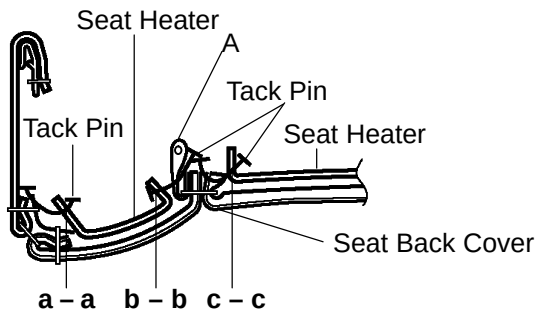

a – a, c – c:

Tack pins should not be beyond the sean.

b – b:

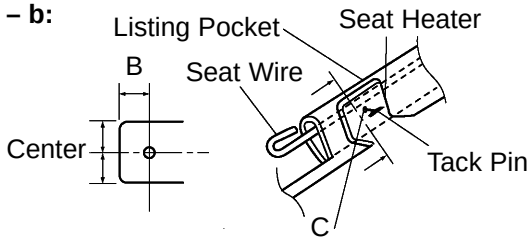

A: Install the tack pins under the wire.

B: 15 mm (0.59 in.)

C: Aline the seat heater and the end of listing pocket.

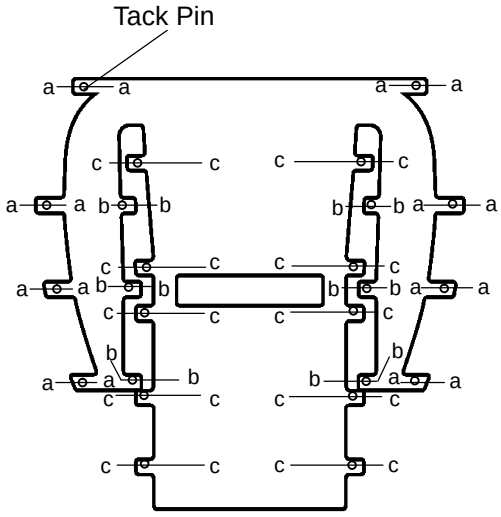

B57686

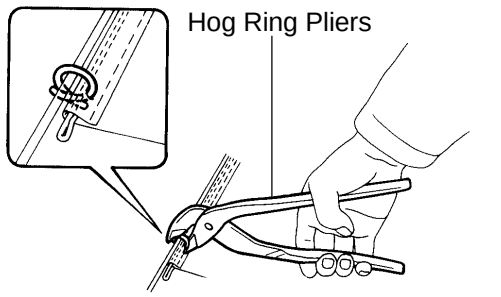

B50126

20. INSTALL SEPARATE TYPE FRONT SEAT CUSHION COVER

(a) Using hog ring pliers, install the front seat cushion cover LH with new hog rings to the front seat cushion pad LH.

(b) Using hog ring pliers, install the front seat cushion cover LH and pad LH with new hog ring to the front seat frame LH.

NOTICE:

- **Be careful not to damage the cover.**
- **When installing the hog rings, take care to prevent wrinkles as little as possible.**

21. INSTALL FRONT SEAT BACK HEATER ASSY LH (W/ SEAT HEATER)

(a) Set the seat heater to the seat back cover.

(b) Install the front seat heater assembly LH to the seat back cover with the 8 tack pins.

NOTICE:

Do not substitute other metal parts for tack pins.

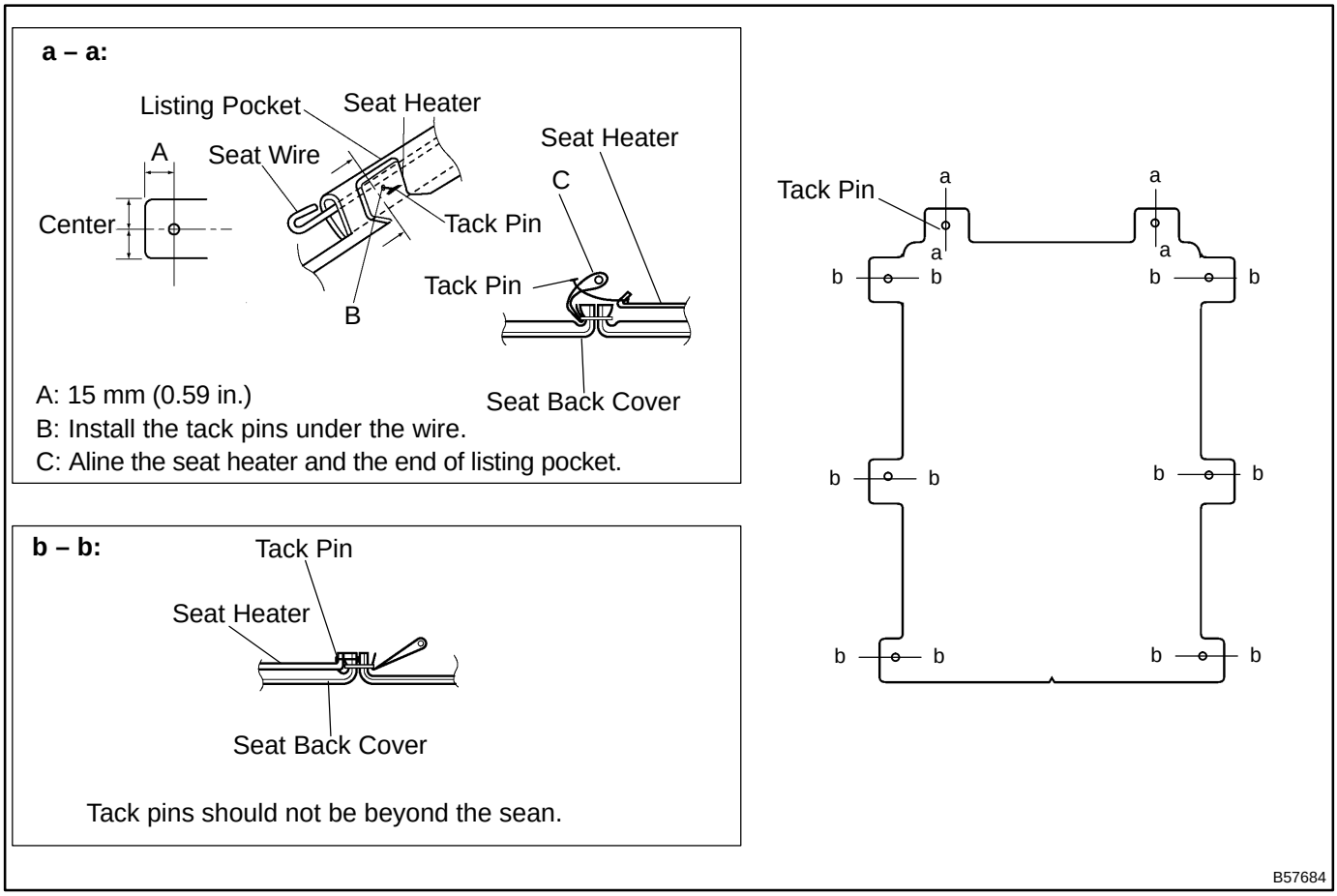

22. INSTALL SEPARATE TYPE FRONT SEAT BACK COVER

NOTICE:

- **For a vehicle with side airbag, if the seat back cover has damage, the side airbag may not activate normally, and therefore it is necessary to replace the seat back cover.**
- **For a vehicle with side airbag, if the side airbag has damage replace the pad and the frame with new ones.**
- **For a vehicle with side airbag, the side airbag may not activate normally unless the seat back cover is securely installed, as shown in the following procedures.**

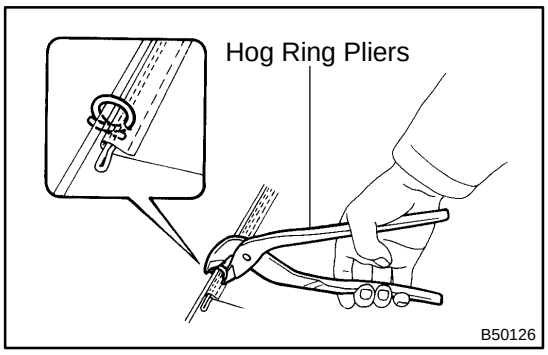

(a) Using hog ring pliers, install the front seat back cover LH with new hog rings to the front seat back pad LH.

NOTICE:

- **Be careful not to damage the cover.**
- **When installing the hog rings, take care to prevent wrinkles as little as possible.**

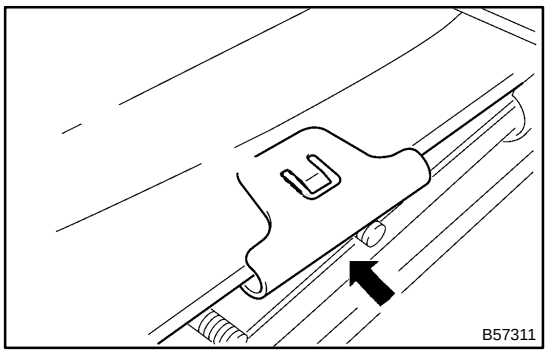

(b) w/ Side airback:
Install the seat back cover bracket.

NOTICE:

- **For a vehicle with side airbag, the side airbag may not activate normally unless the seat back cover is securely installed.**
- **Check that the strap has no twist after installing the bracket.**

23. INSTALL FRONT SEAT BACK ASSY

(a) Install the front seat back assembly with the 4 bolts.
Torque: 43 N·m (440 kgf·cm, 32 ft·lbf)

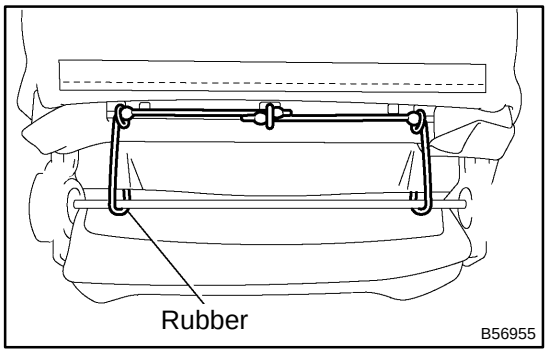

(b) As shown in the illustration, engage the rubber with a hole of the front seat back frame with new hog rings.

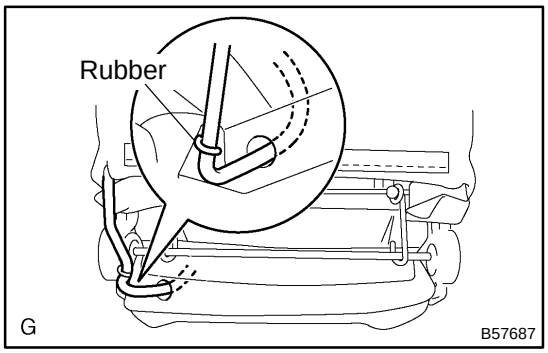

(c) w/ Side airbag:
Install the wire harness and clamps of the side airbag through the seat cushion cover end.

(d) Using hog ring pliers, install new hog rings.

NOTICE:

- **Be careful not to damage the cover.**
- **When installing the hog rings, take care to prevent wrinkles as little as possible.**

24. INSTALL FRONT SEAT INNER BELT ASSY LH

(a) Install the front seat inner belt assembly LH with the bolt.
Torque: 42 N·m (420 kgf·cm, 31 ft·lbf)

25. INSTALL FRONT SEAT ASSY LH

(a) Set the front seat assembly LH to the vehicle.

NOTICE:

Be careful not to damage the cover.

(b) Install the front seat assembly LH with the 4 bolts.

Torque: 36.8 N·m (377 kgf·cm, 27 ft·lbf)

(c) When sliding the seat, check that the both sides of the adjuster will lock simultaneously.

NOTICE:

Check that the seat adjuster locked.

FRONT SEAT (Manual Seat for TMMK Made)

COMPONENTS

7206P–01

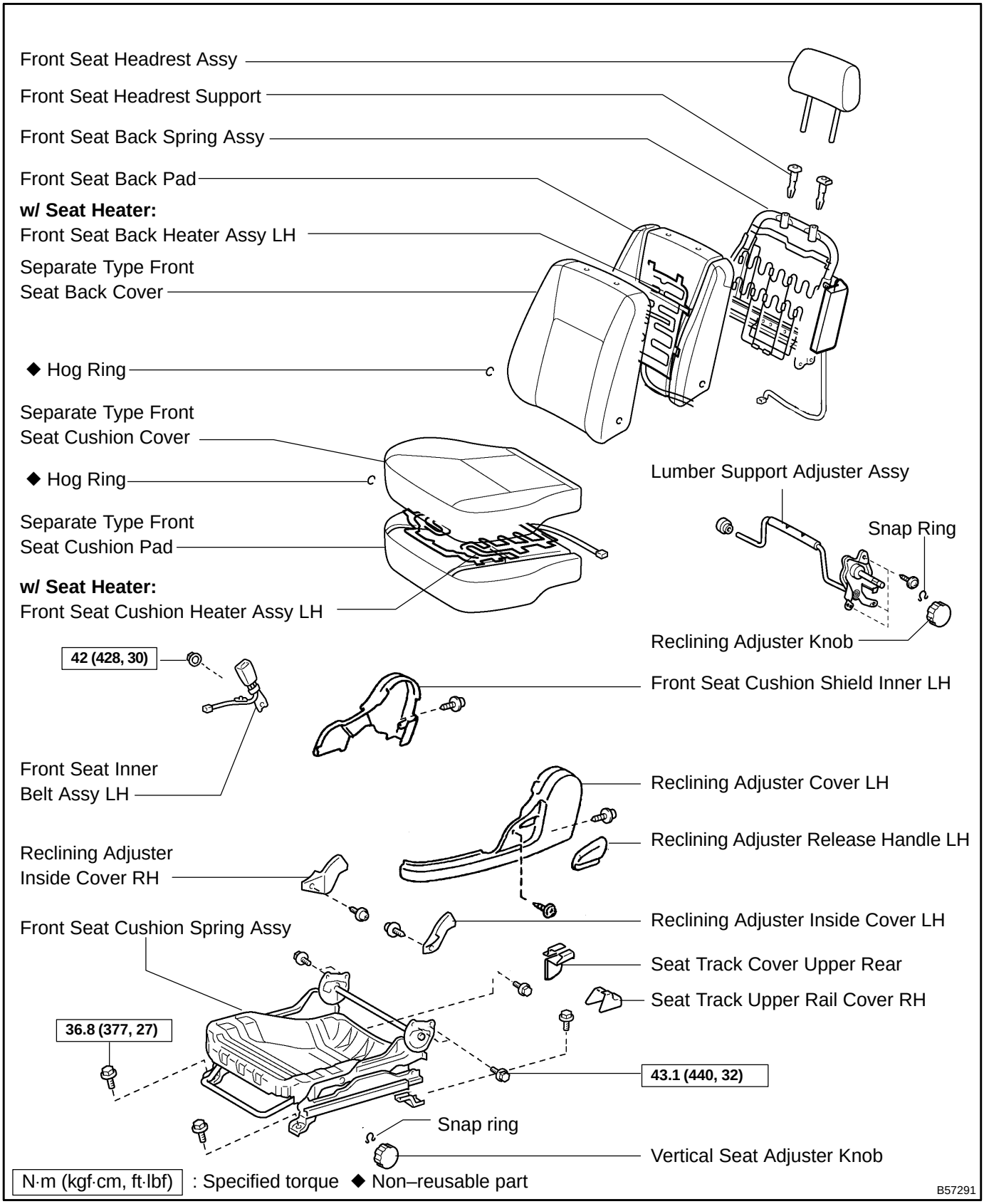

OVERHAUL

HINT:

- Installation is the revers order of the removal. But, the installation is indicated only when it has a point.
- In the RH side, work in the same procedure as in the LH side.

1. DISCONNECT BATTERY NEGATIVE TERMINAL

2. REMOVE SEAT TRACK COVER LH

3. REMOVE SEAT TRACK BRACKET COVER INNER LH

4. REMOVE FRONT SEAT ASSY LH

(a) Remove the 4 bolts.

(b) Disconnect the connectors, and then remove the front seat assembly LH.

5. REMOVE FRONT SEAT HEADREST ASSY

6. REMOVE VERTICAL SEAT ADJUSTER KNOB

(a) Using a cloth or something, remove the snap rings and the vertical seat adjusting knob.

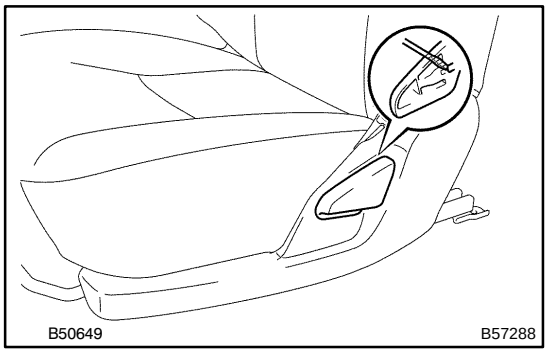

7. REMOVE RECLINING ADJUSTER RELEASE HANDLE LH

(a) Using a screwdriver, remove the reclining adjuster release handle LH.

HINT:

Tape the screwdriver tip before use.

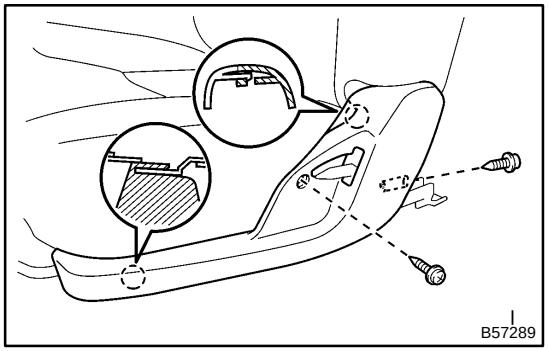

8. REMOVE RECLINING ADJUSTER COVER LH

(a) Remove the 2 screws.

(b) Disengage the claws, and then remove the reclining adjuster cover LH.

9. REMOVE FRONT SEAT INNER BELT ASSY LH

(a) Disconnect the connector.

(b) Remove the nut and the front seat inner belt assembly LH.

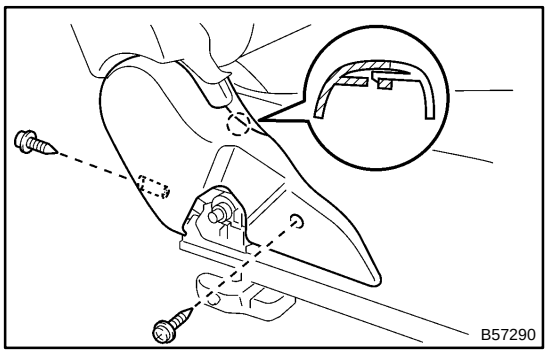

10. REMOVE FRONT SEAT CUSHION SHIELD INNER LH

(a) Remove the 2 screws.
(b) Disengage the claws and the front seat cushion shield inner LH.

11. REMOVE FRONT SEAT BACK ASSY

(a) Remove the hog rings at the lower portion of the seat back cover.
(b) w/Side air bag:
Disconnect the wire harness of the side airbag from the seat cushion.
(c) Remove the 4 bolts and the front seat back cover assembly LH.

12. REMOVE RECLINING ADJUSTER KNOB

(a) Using a cloth or something, remove the snap rings and the reclining adjusting knob.

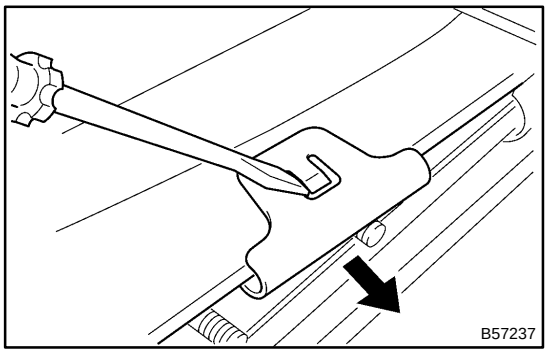

13. REMOVE SEPARATE TYPE FRONT SEAT BACK COVER

(a) Turn up the cover.
(b) w/ Side airbag:
Using a screwdriver, disengage the seat back cover bracket.
(c) Disengage the claws to remove the 2 headrest supports, and then take away the front seat cover LH from the pad spring.
(d) Remove the hog rings, and then take away the cover from the pad.

14. REMOVE FRONT SEAT BACK HEATER ASSY LH(W/ SEAT HEATER)

(a) Cut off the tack pins which fasten the seat heater, and then remove the seat heater from the cushion cover.

NOTICE:
Be careful not to damage the seat cushion cover.

15. REMOVE SEPARATE TYPE FRONT SEAT CUSHION COVER

(a) Disengage the hook, and remove the front seat cushion cover together with the front cushion pad.
(b) Remove the hog ring, and take away the front seat cushion cover from the front cushion pad.

16. REMOVE FRONT SEAT CUSHION HEATER ASSY LH(W/ SEAT HEATER)

(a) Cut off the tack pins which fasten the seat heater, and then remove the seat heater from the seat back cover.

NOTICE:
Be careful not to damage the seat back cover.

17. REMOVE RECLINING ADJUSTER INSIDE COVER LH

(a) Remove the 2 screws and the reclining adjuster inside cover LH.
(b) Employ the same manner described above to the other side.

18. REMOVE RECLINING ADJUSTER INSIDE COVER RH

19. INSTALL FRONT SEAT CUSHION HEATER ASSY LH(W/ SEAT HEATER)

(a) Set the seat heater to the seat cushion cover.
(b) Install the seat heater to the seat cushion cover with the 24 tack pins.

NOTICE:
Do not substitute other metal parts for tack pins.

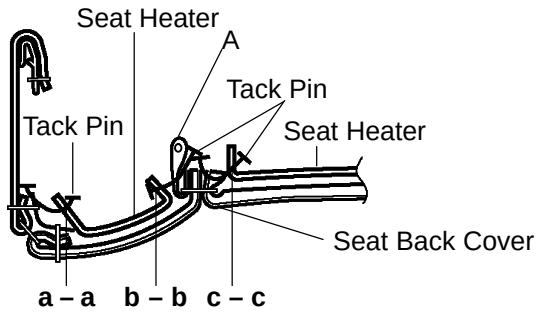

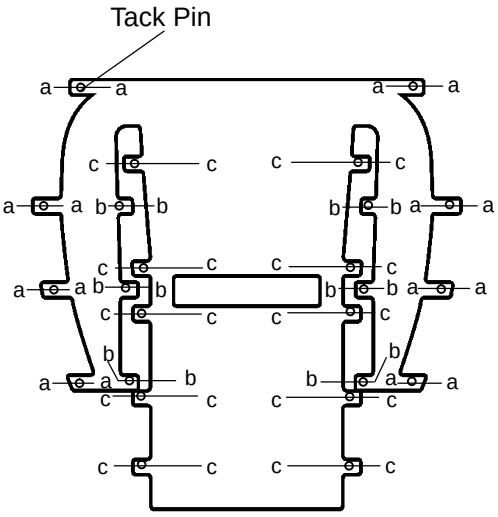

a – a, c – c:

Tack pins should not be beyond the sean.

b – b:

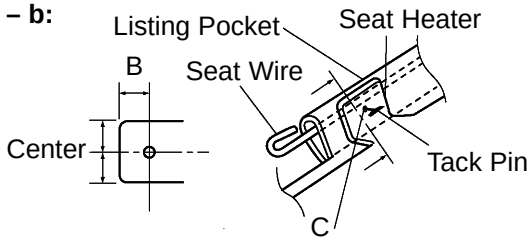

A: Install the tack pins under the wire.
B: 15 mm (0.59 in.)
C: Aline the seat heater and the end of listing pocket.

B57686

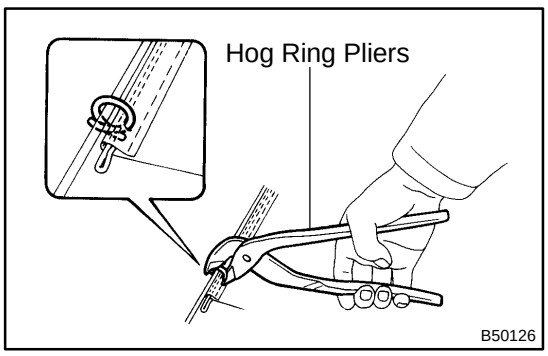

20. INSTALL SEPARATE TYPE FRONT SEAT CUSHION COVER

(a) Using hog ring pliers, install new hog rings.

NOTICE:
- **Be careful not to damage the cover.**
- **When installing the hog rings, take care to prevent wrinkles as little as possible.**

21. INSTALL FRONT SEAT BACK HEATER ASSY LH(W/ SEAT HEATER)

(a) Set the seat heater to the seat back cover.
(b) Install the seat heater to the seat back cover with the 8 tack pins.

NOTICE:
Does not substitute other metal parts for tack pins.

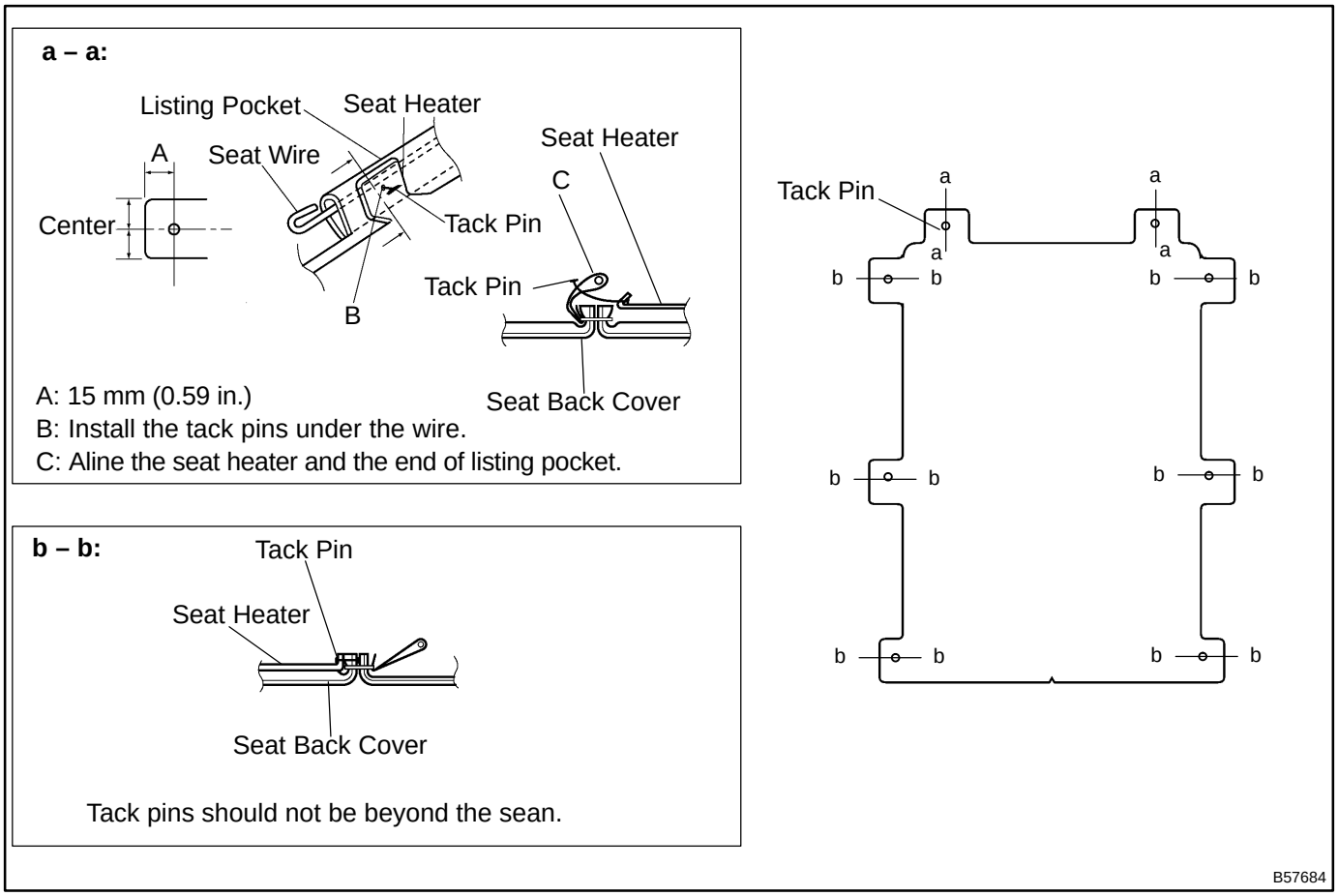

22. INSTALL SEPARATE TYPE FRONT SEAT BACK COVER

NOTICE:

- **For a vehicle with side airbag, if the seat back cover has damage, the side airbag may not activate normally, and therefore it is necessary to replace the seat back cover.**
- **For a vehicle with side airbag, if the side airbag has damage replace the pad and the frame with new ones.**
- **For a vehicle with side airbag, the side airbag may not activate normally unless the seat back cover is securely installed, as shown in the following procedures.**

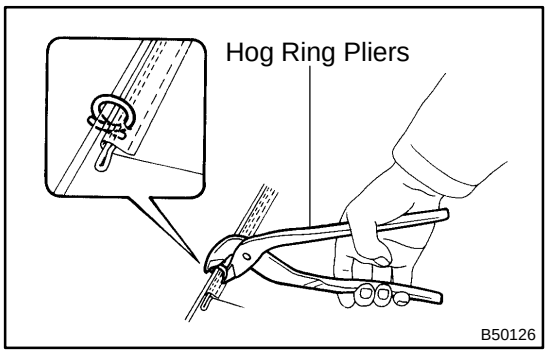

(a) Using hog ring pliers, install new hog rings.

NOTICE:

- **Be careful not to damage the cover.**
- **When installing the hog rings, take care to prevent wrinkles as little as possible.**

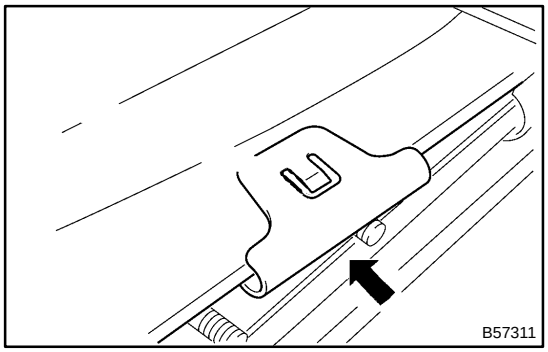

(b) Install the seat back cover bracket (for a vehicle with side airbag).

NOTICE:

- **For a vehicle with side airbag, the side airbag may not activate normally unless the seat back cover is securely installed.**
- **Check that the strap has no twist after installing the bracket.**

23. INSTALL FRONT SEAT BACK ASSY

(a) Install the front seat back assembly with the 4 bolts.
Torque: 43 N·m (440 kgf·cm, 32 ft·lbf)

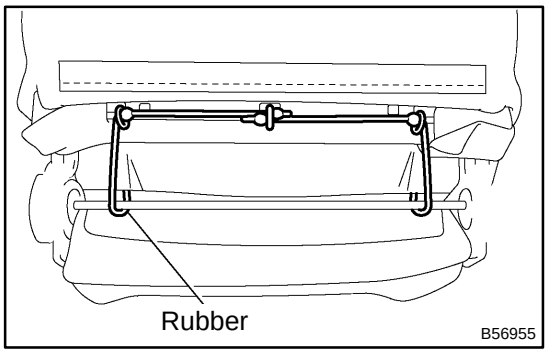

(b) As shown in the illustration, engage the rubber with a hole of the front seat back frame with hog rings.

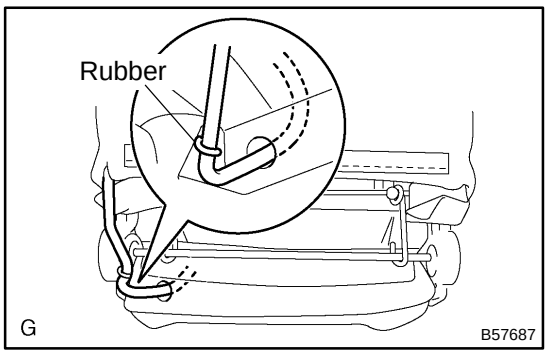

(c) Install the wire harness and clamps of the side airbag through the seat cushion cover end.

(d) Using hog ring pliers, install hog rings.

NOTICE:

- **Be careful not to damage the cover.**
- **When installing the hog rings, take care to prevent wrinkles as little as possible.**

24. INSTALL FRONT SEAT INNER BELT ASSY LH

(a) Install the front seat inner belt assembly LH with the bolt.
Torque: 42 N·m (420 kgf·cm, 31 ft·lbf)

25. INSTALL FRONT SEAT ASSY LH

(a) Set the front seat assembly LH to the vehicle.

NOTICE:

Be careful not to damage the cover.

(b) Install the front seat assembly LH with the 4 bolts.

Torque: 36.8 N·m (377 kgf·cm, 27 ft·lbf)

(c) When sliding the seat, check that the both sides of the adjuster will lock simultaneously.

NOTICE:

Check that the seat adjuster locked.

REAR SEAT (TMC Made)

COMPONENTS

7206S–01

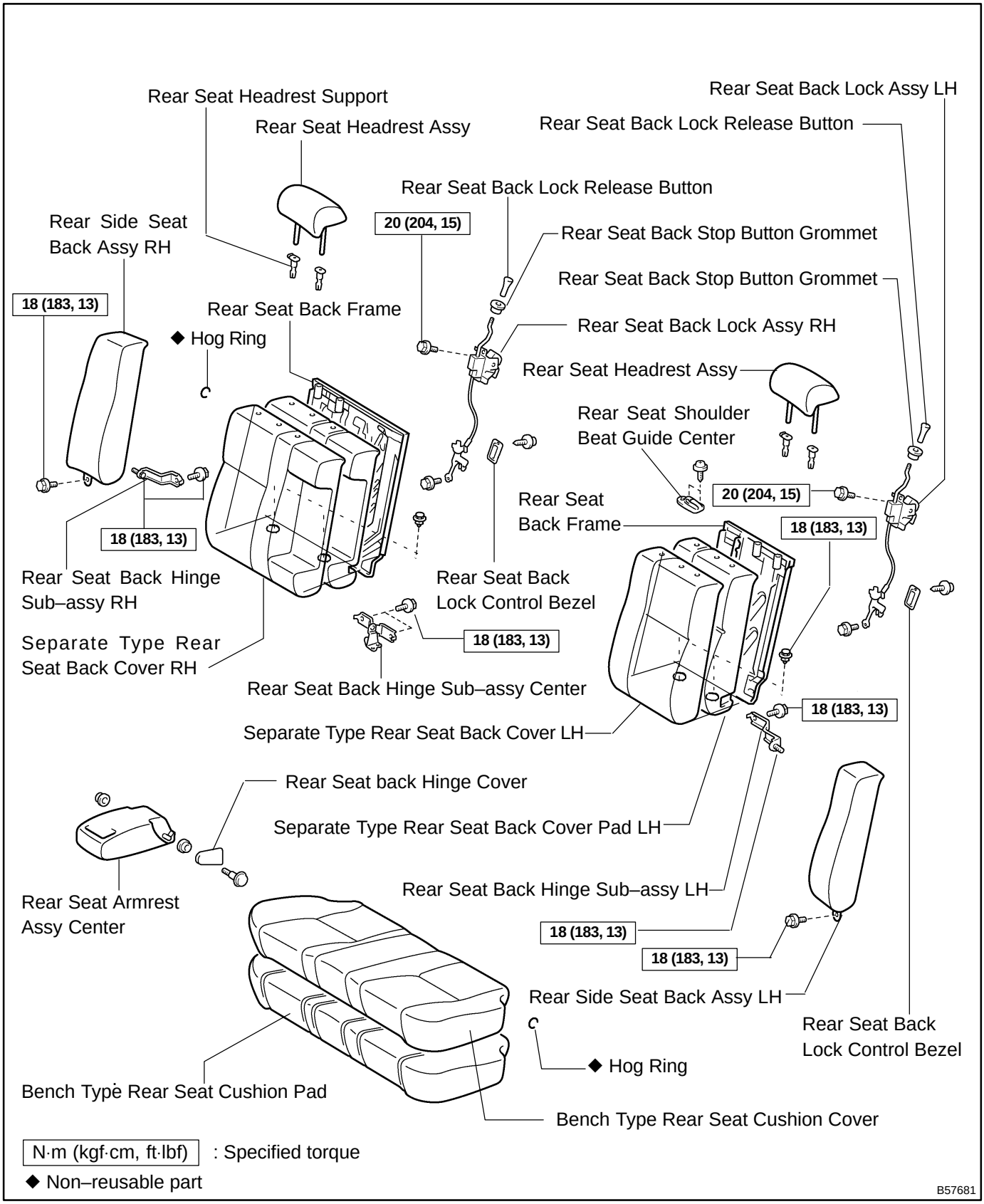

OVERHAUL

HINT:

- Installation is the revers order of the removal. But, the installation is indicated only when it has a point.
- In the RH side, work in the same procedure as in the LH side.

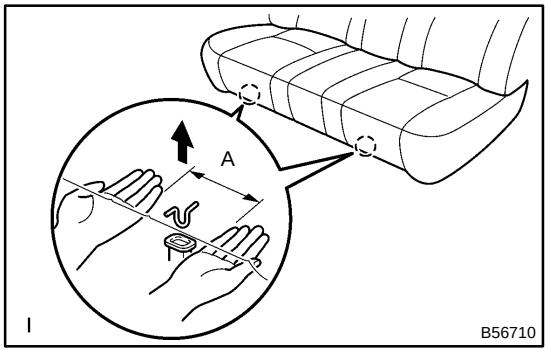

1. REMOVE REAR SEAT CUSHION ASSY

(a) Holding up the front end of the cushion assembly, disengage the clips and pull out the cushion assembly forward to remove it.

A: 100 mm (3.94 in.)

NOTICE:

The cushion frame will be deformed unless holding the clips around the roots.

2. REMOVE REAR SEAT HEADREST ASSY

3. REMOVE REAR SEAT HEADREST ASSY

4. REMOVE REAR SEAT BACK ASSY RH

(a) Tilting the seat forward, remove the 2 clips that are engaged with the floor.
(b) Remove the 2 bolts and the rear seat back assembly.
(c) Employ the same manner described above to the other side.

5. REMOVE REAR SEAT BACK ASSY LH

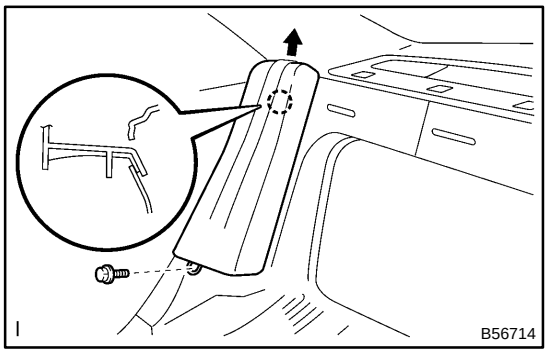

6. REMOVE REAR SIDE SEAT BACK ASSY RH

(a) Remove the bolt and pull it out in the illustrated direction to remove the rear side seat back assembly.
(b) Employ the same manner described above to the other side.

7. REMOVE REAR SIDE SEAT BACK ASSY LH

8. REMOVE REAR SEAT BACK HINGE COVER

9. REMOVE REAR SEAT ARMREST ASSY CENTER

(a) Remove the bolts and the rear seat armrest assembly senter.

10. REMOVE REAR SEAT SHOULDER BELT GUIDE CENTER

11. REMOVE REAR SEAT BACK LOCK CONTROL BEZEL

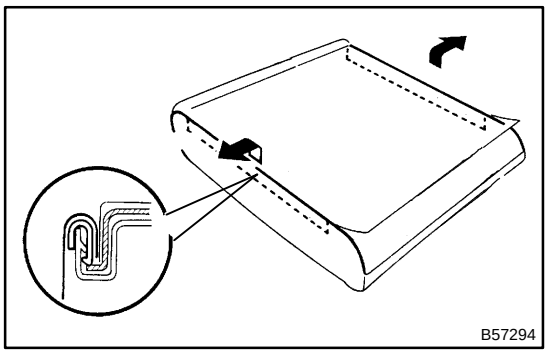

12. REMOVE SEPARATE TYPE REAR SEAT BACK COVER
RH

(a) Disengage the back cover side, and then turn up the rear-seat back carpet.
(b) Remove rear seat back lock release button

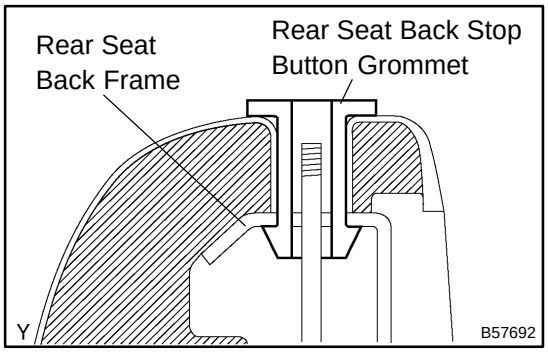

(c) Remove rear seat back stop button grommet.
(d) Remove the hog rings, and hold up the seat back frame to remove the 2 headrest supports.
(e) Remove the rear seat back cover together with the seat-back pad.
(f) Remove the hog rings, and then take away the cover from the rear seat back pad.

13. REMOVE SEPARATE TYPE REAR SEAT BACK COVER
LH

14. REMOVE REAR SEAT BACK LOCK ASSY RH

(a) Remove the 2 bolts and the rear seat back lock assembly RH.
(b) Employ the same manner described above to the other side.

15. REMOVE REAR SEAT BACK LOCK ASSY LH

16. REMOVE BENCH TYPE REAR SEAT CUSHION COVER

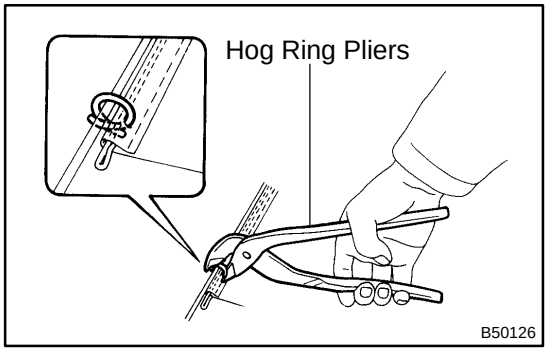

17. INSTALL BENCH TYPE REAR SEAT CUSHION COVER

(a) Using hog ring pliers, install new hog rings.

NOTICE:

- **Be careful not to damage the cover.**
- **When installing the hog rings, take care to prevent wrinkles as little as possible.**

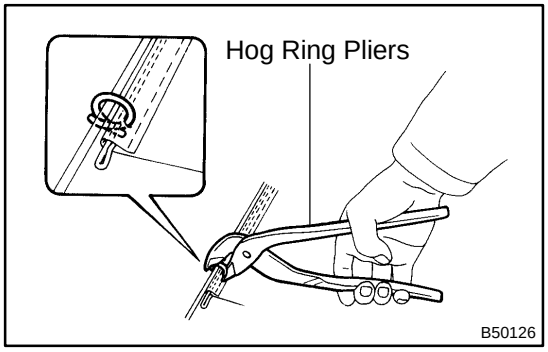

18. INSTALL SEPARATE TYPE REAR SEAT BACK COVER
LH

(a) Using hog ring pliers, install new hog rings.

NOTICE:

- **Be careful not to damage the cover.**
- **When installing the hog rings, take care to prevent wrinkles as little as possible.**

19. INSTALL SEPARATE TYPE REAR SEAT BACK COVER RH

(a) Using hog ring pliers, install the hog rings.

NOTICE:

- **Be careful not to damage the cover.**
- **When installing the hog rings,take care to prevent wrinkles as little as possible.**

(b) Using hog ring pliers, install new hog rings.

20. INSTALL REAR SEAT BACK HINGE SUB–ASSY CENTER

(a) Install the rear seat back hinges center with the 2 bolts.
Torque: 18 N·m (183 kgf·cm, 13 ft·lbf)

21. INSTALL REAR SEAT BACK HINGE SUB–ASSY RH

(a) Install the 2 rear seat back hinge with the 2 bolts.
Torque: 18 N·m (183 kgf·cm, 13 ft·lbf)

22. INSTALL REAR SIDE SEAT BACK ASSY LH

Torque: 18 N·m (183 kgf·cm, 13 ft·lbf)

23. INSTALL REAR SIDE SEAT BACK ASSY RH

(a) Install the rear side seat back assembly with the 2 bolts.
Torque: 18 N·m (183 kgf·cm, 13 ft·lbf)

24. INSTALL REAR SEAT BACK ASSY RH

(a) Install the rear seat back assembly with the 2 bolts.
Torque: 18 N·m (183 kgf·cm, 13 ft·lbf)

25. INSTALL REAR SEAT BACK ASSY LH
Torque: 18 N·m (183 kgf·cm, 13 ft·lbf)

REAR SEAT (TMMK Made)

COMPONENTS

7206U–01

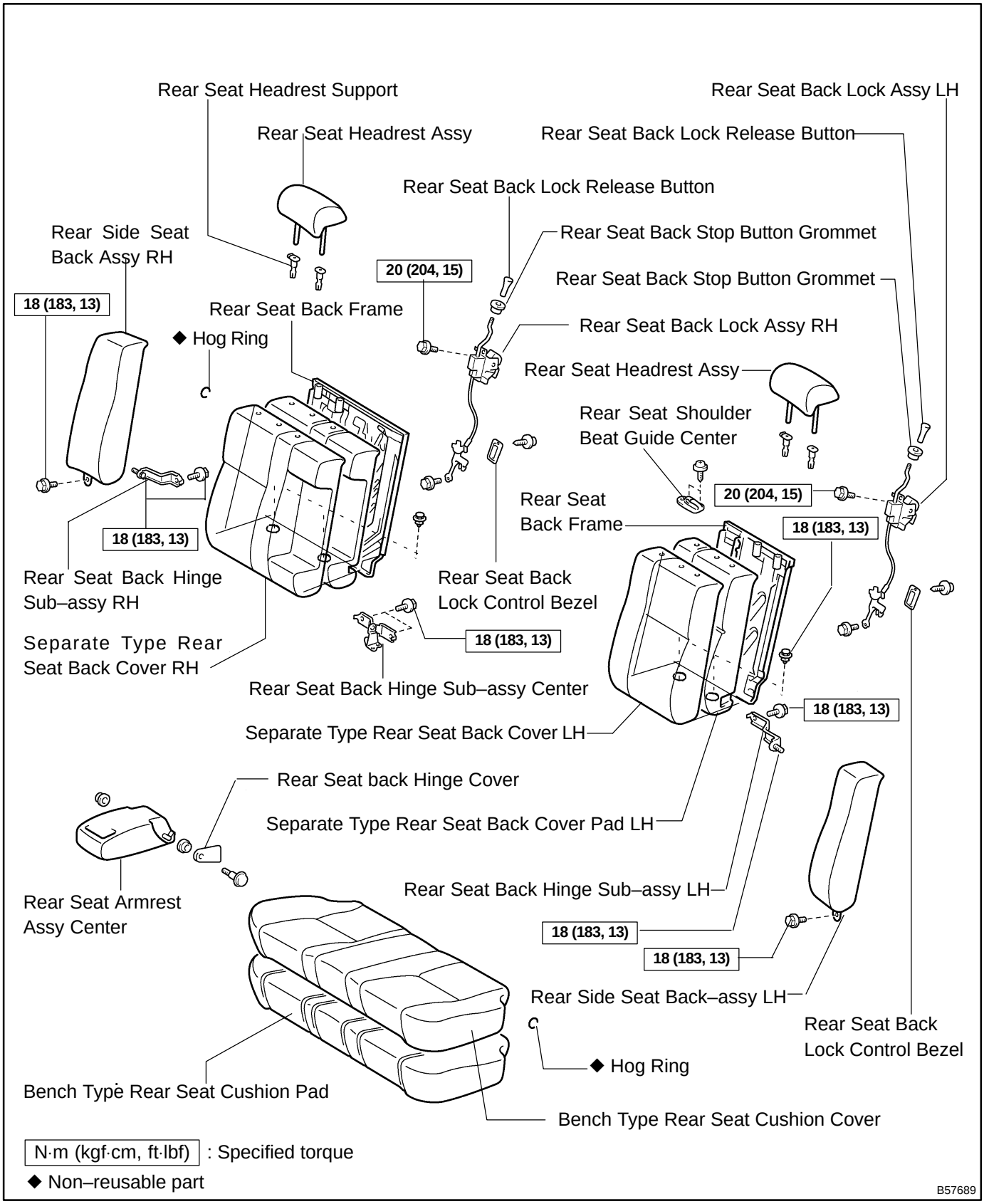

OVERHAUL

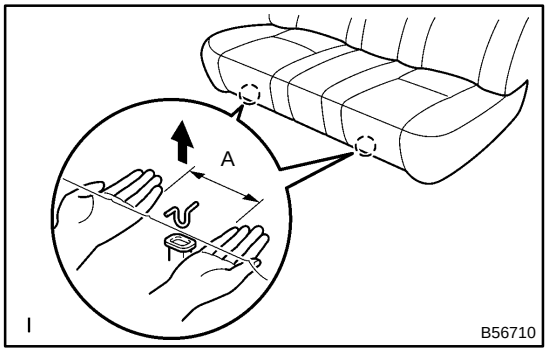

1. REMOVE REAR SEAT CUSHION ASSY

(a) Holding up the front end of the cushion assembly, disengage the clips and pull out the cushion assembly forward to remove it.

A: 100 mm (3.94 in.)

NOTICE:

The cushion frame will be deformed unless holding the clips around the roots.

2. REMOVE REAR SEAT HEADREST ASSY

3. REMOVE REAR SEAT HEADREST ASSY

4. REMOVE REAR SEAT BACK ASSY RH

(a) Tilting the seat forward, remove the 2 clips that are engaged with the floor.
(b) Remove the 2 bolts and the rear seat back assembly.
(c) Employ the same manner described above to the other side.

5. REMOVE REAR SEAT BACK ASSY LH

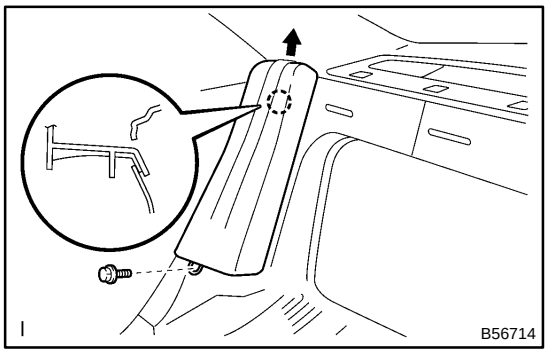

6. REMOVE REAR SIDE SEAT BACK ASSY RH

(a) Remove the bolt and pull it out in the illustrated direction to remove the side seat back assembly.
(b) Employ the same manner described above to the other side.

7. REMOVE REAR SIDE SEAT BACK ASSY LH

8. REMOVE REAR SEAT BACK HINGE COVER

9. REMOVE REAR SEAT ARMREST ASSY CENTER

(a) Remove the bolts and the rear seat armrest assembly center.

10. REMOVE REAR SEAT SHOULDER BELT GUIDE CENTER

11. REMOVE REAR SEAT BACK LOCK CONTROL BEZEL

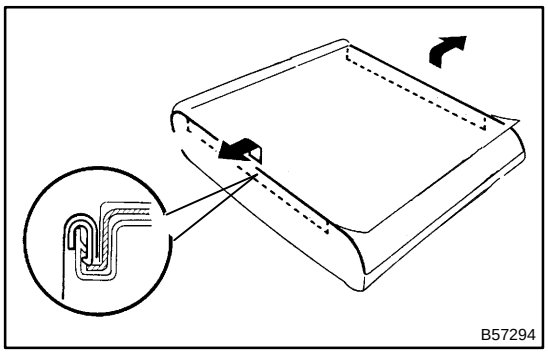

12. REMOVE SEPARATE TYPE REAR SEAT BACK COVER
RH

(a) Disengage the back cover side, and then turn up the rear-seat back carpet.
(b) Remove the rear seat back lock release button.

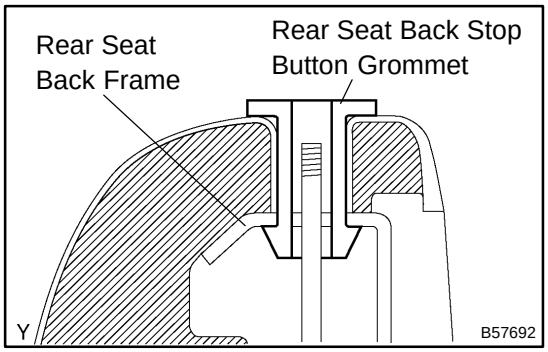

(c) Remove rear seat back stop button grommet.
(d) Remove the hog rings, and hold up the seat back frame to remove the 2 headrest supports.
(e) Remove the rear seat back cover together with the seat-back pad.
(f) Remove the hog rings, and then take away the cover from the rear seat back pad.

13. REMOVE SEPARATE TYPE REAR SEAT BACK COVER
LH

14. REMOVE REAR SEAT BACK LOCK SUB–ASSY RH

(a) Remove the 2 bolts and the rear seat back lock assembly RH.
(b) Employ the same manner described above to the other side.

15. REMOVE REAR SEAT BACK LOCK SUB–ASSY LH
REMOVE REAR SEAT BACK LOCK ASSY LH

16. REMOVE BENCH TYPE REAR SEAT CUSHION COVER

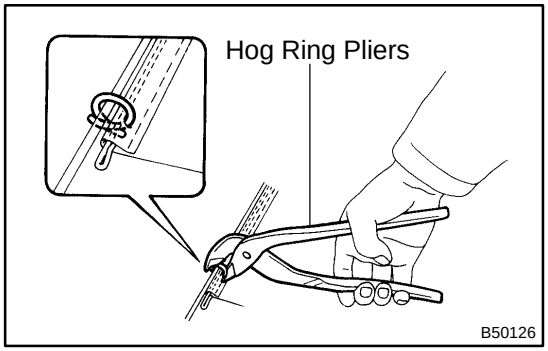

17. INSTALL BENCH TYPE REAR SEAT CUSHION COVER

(a) Using hog ring pliers, install new hog rings.

NOTICE:

- **Be careful not to damage the cover.**
- **When installing the hog rings, take care to prevent wrinkles as little as possible.**

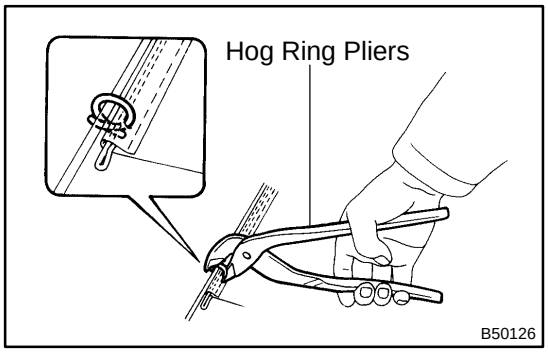

18. INSTALL SEPARATE TYPE REAR SEAT BACK COVER
LH

(a) Using hog ring pliers, install new hog rings.

NOTICE:

- **Be careful not to damage the cover.**
- **When installing the hog rings, take care to prevent wrinkles as little as possible.**

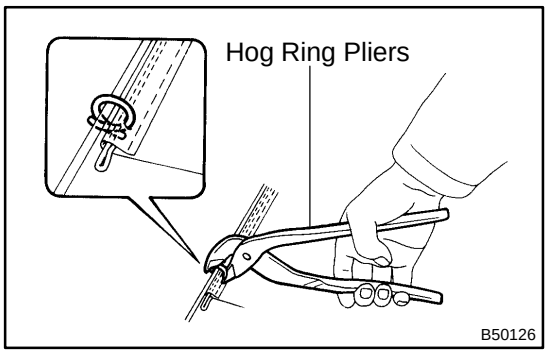

19. INSTALL SEPARATE TYPE REAR SEAT BACK COVER
RH

(a) Using hog ring pliers, install new hog rings.

NOTICE:

- **Be careful not to damage the cover.**
- **When installing the hog rings, take care to prevent wrinkles as little as possible.**

20. INSTALL REAR SEAT BACK HINGE SUB–ASSY CENTER

(a) Install the rear seat back hinges center with the 2 bolts.
Torque: 18 N·m (183 kgf·cm, 13 ft·lbf)

21. INSTALL REAR SEAT BACK HINGE SUB–ASSY RH

(a) Install the 2 rear seat back hinge with the 2 bolts.
Torque: 18 N·m (183 kgf·cm, 13 ft·lbf)

22. INSTALL REAR SIDE SEAT BACK ASSY LH

Torque: 18 N·m (183 kgf·cm, 13 ft·lbf)

23. INSTALL REAR SIDE SEAT BACK ASSY RH

(a) Install the rear side seat back assembly with the 2 bolts.
Torque: 18 N·m (183 kgf·cm, 13 ft·lbf)

24. INSTALL REAR SEAT BACK ASSY RH

(a) Install the rear seat back assembly with the 2 bolts.
Torque: 18 N·m (183 kgf·cm, 13 ft·lbf)

25. INSTALL REAR SEAT BACK ASSY LH

(a) Install the rear side seat back assembly with the 2 bolts.
Torque: 18 N·m (183 kgf·cm, 13 ft·lbf)

SEAT HEATER SYSTEM

LOCATION

7206W–01

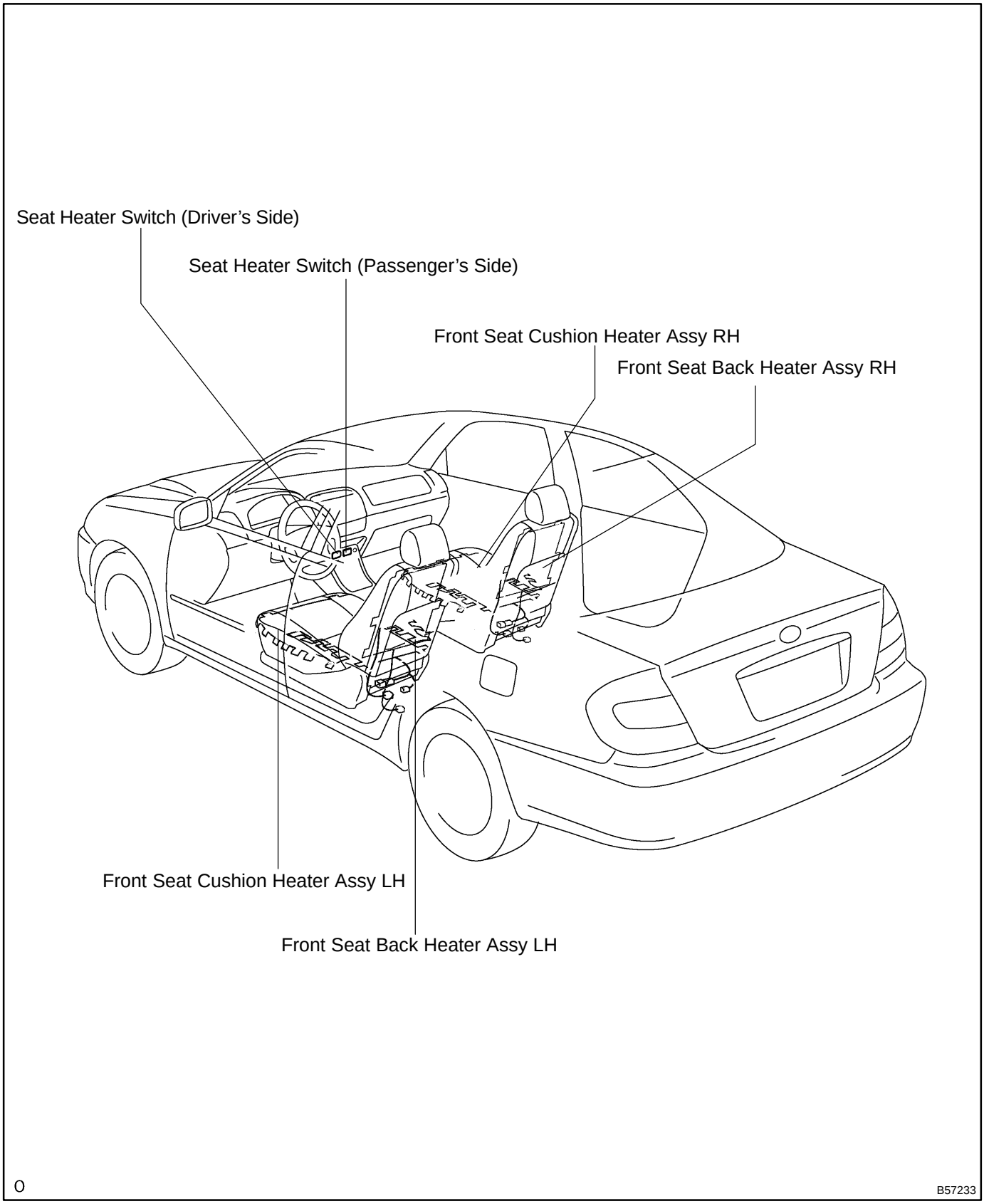

7206V–01

PROBLEM SYMPTOMS TABLE

Symptom	Suspected Area	See page
Seat heaters do not operate	1. SEAT HTR fuse	
	2. Front seat cushion heater assy LH	72–37
	3. Front seat cushion heater assy RH	72–38
	4. Front seat back heater assy LH	72–37
	5. Front seat back heater assy RH	72–38
	6. Seat heater switch	72–37
	7. Wire harness	

INSPECTION

Seat Heat Switch (Driver's Side)

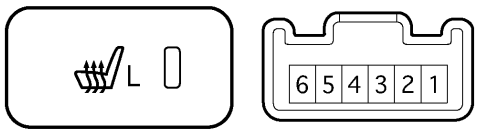

O B51466

Seat Heat Switch (Passenger's Side)

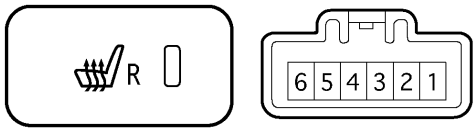

O B51467

Front Seat Cusion Hater

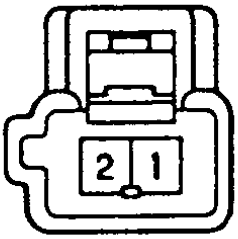

B30883

Front Seat back Hater

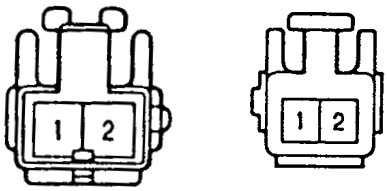

B51473

1. INSPECT SEAT HEATER SWITCH

(a) Inspect the seat heater switch (driver's side) continuity.

Standard:

Terminal No.	Condition	Specified condition
4 ⇔ 6	OFF	Continuity
3 ⇔ 4 ⇔ 6	ON	Continuity
1 ⇔ 2	Illumination	Continuity (always)

If the continuity is not as specified, replace the seat heater switch.

(b) Inspect the seat heater switch (passenger's side) continuity.

Standard:

Terminal No.	Condition	Specified condition
4 ⇔ 6	OFF	Continuity
3 ⇔ 4 ⇔ 6	ON	Continuity
1 ⇔ 2	Illumination	Continuity (always)

If the continuity is not as specified, replace the seat heater switch.

2. INSPECT FRONT SEAT CUSHION HEATER ASSY LH

(a) Inspect the seat cushion heater assembly LH continuity.

Standard:

Terminal No.	Condition	Specified condition
1 ⇔ 2	Constant	Continuity

If the continuity is not as specified, replace the seat cushion heater assembly.

3. INSPECT FRONT SEAT BACK HEATER ASSY LH

(a) Inspect the seat back heater assembly LH continuity.

Standard:

Terminal No.	Condition	Specified condition
1 2	Constant	Continuity

If the continuity is not as specified, replace the seat back heater assembly.

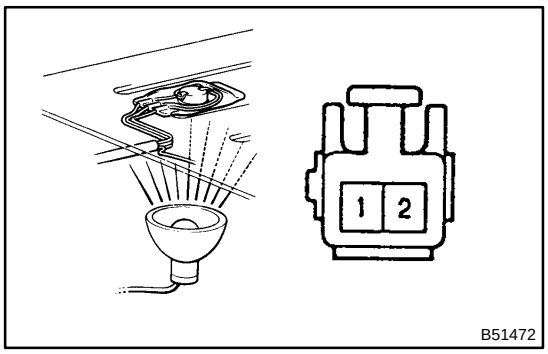

(b) Inspect the seat cushion thermostat continuity.
(1) Disconnect the seat back heater from the seat cushion heater LH.
(2) Heat up the thermostat LH with a beat light.
(3) Inspect the seat cushion heater continuity between the terminals.

Standard:

Terminal No.	Condition	Specified condition
1 ⇔ 2	Seat heater temp. below 25 – 35°C (77 – 95°F)	Continuity
	Seat heater temp. 25 – 35°C (77 – 95°F)	No continuity

If the continuity is not as specified, replace the seat heater cushion heater assembly.

4. INSPECT FRONT SEAT CUSHION HEATER ASSY RH

5. INSPECT FRONT SEAT BACK HEATER ASSY RH

POWER DOOR LOCK CONTROL SYSTEM

73083–01

ON–VEHICLE INSPECTION

1. DOOR LOCK FAIL–SAFE

(a) When a malfunction in the door control switch (manual switch, interlocked operation with key) has been detected, door LOCK/UNLOCK operations become unable.

2. CHECK FOR ELECTRICAL DOOR LOCK OPERATION

(a) Check the basic function.

(1) Check all doors will lock when the door control switch (for manual operation) is turned to the lock side and all doors will unlock when turned to the unlock side.

(2) Check all doors will lock when the driver's door is operated to be lock and all doors will unlock when operated to be unlock, by the key operation outside the vehicle.

(b) Check the key confinement prevention function.

NOTICE:

In order to prevent the key from confined, the inspection should be made with the driver's door glass open.

(1) Insert the ignition key into the ignition switch lock cylinder.

(2) With the driver's door open, check all doors will immediately unlock when the door lock knob for the driver's door is turned to the lock side.

(3) With the driver's door open, check all doors will immediately unlock when the door control switch (for manual operation) is turned to the lock side.

(4) With the driver's door open, lock the driver's door lock by holding the driver's door lock knob in the lock side for 2 seconds or more and then close the driver's door. Then, check that all doors will unlock.

(c) Check the security function.

(1) Close all doors with the driver's door glass open so that the door control switch can be operated outside the vehicle.

(2) Pull out the ignition key, open the driver's door, and close and lock the door without a key operation. Under this condition, check that all doors will not unlock when the door control switch (for manual operation) is turned to the unlock side outside the vehicle.

(3) Pull out the ignition key, close and lock the driver's door by the key operation. Under this condition, check that all doors will not unlock when the door control switch (for manual operation) is turned to the unlock side outside the vehicle.

(4) Pull out the ignition key, close the driver's door and lock the door by the wireless door lock operation. Under this condition, check that all doors will not unlock when the door control switch (for manual operation) is turned to the unlock side outside the vehicle.

HINT:

Under the conditions below, check that the security function will cancel.

- Ignition switch turned ON.
- Driver's door unlocked by the key operation.
- Door control switch (for manual operation) turned to the unlock side after unlocking the door control knob manually.
- Doors are unlocked by the wireless operation.

(d) Check the illumination function.
   (1) Move the map light switch in the DOOR position.
   (2) Check that the map light will be on simultaneously with all doors' unlocking operation when the driver's door of all the closing doors is turned unlock by the key operation.
   (3) Map light will be off in approximately 15 seconds if a door has not been opened for a while.

73082–01

INSPECTION

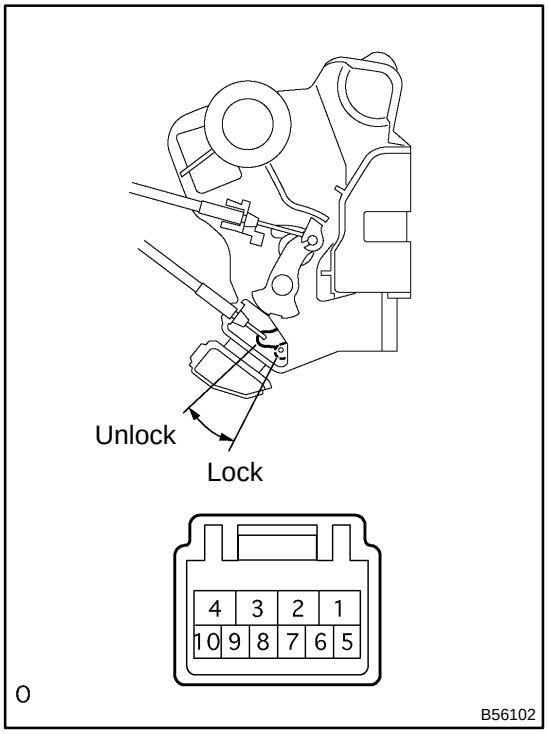

1. INSPECT FRONT DOOR W/MOTOR LOCK ASSY RH

(a) Inspect the door lock motor operation.

Standard:

Measuring condition	Operation
Battery positive – Terminal 4 Battery negative – Terminal 1	Lock
Battery positive – Terminal 1 Battery negative – Terminal 4	Unlock

If the operation is not as specified, replace the door lock assembly.

(b) Inspect the position switch continuity.

Standard:

Terminal No.	Door lock position	Specification
7 ⇔ 8	Lock	No continuity
	Unlock	Continuity

If the continuity is not as specified, replace the door lock assembly.

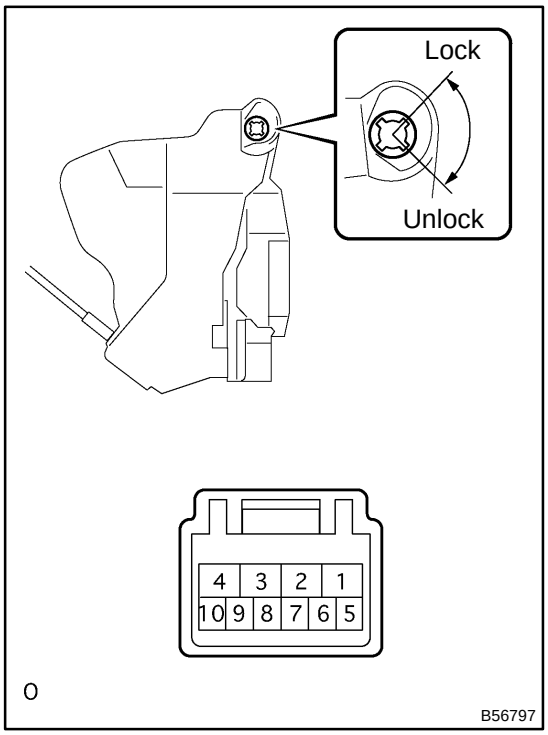

2. INSPECT FRONT DOOR W/MOTOR LOCK ASSY LH

(a) Inspect the door lock assembly continuity.

Standard:

Terminal No.	Switch position	Specified condition
9 – 7	Lock	Continuity
–	OFF	No continuity
10 – 7	Unlock	Continuity

If the operation is not as specified, replace the door lock assembly.

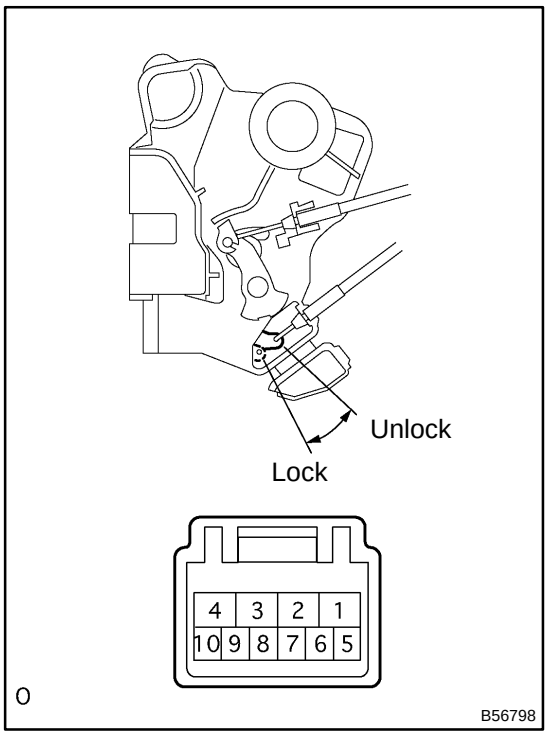

(b) Inspect the door lock motor operation.

Standard:

Measuring condition	Operation
Battery positive – Terminal 4 Battery negative – Terminal 1	Lock
Battery positive – Terminal 1 Battery negative – Terminal 4	Unlock

If the operation is not as specified, replace the door lock assembly.

(c) Inspect the position switch continuity.

Standard:

Terminal No.	Door lock position	Specification
7 ⇔ 8	Lock	No continuity
	Unlock	Continuity

If the continuity is not as specified, replace the door lock assembly.

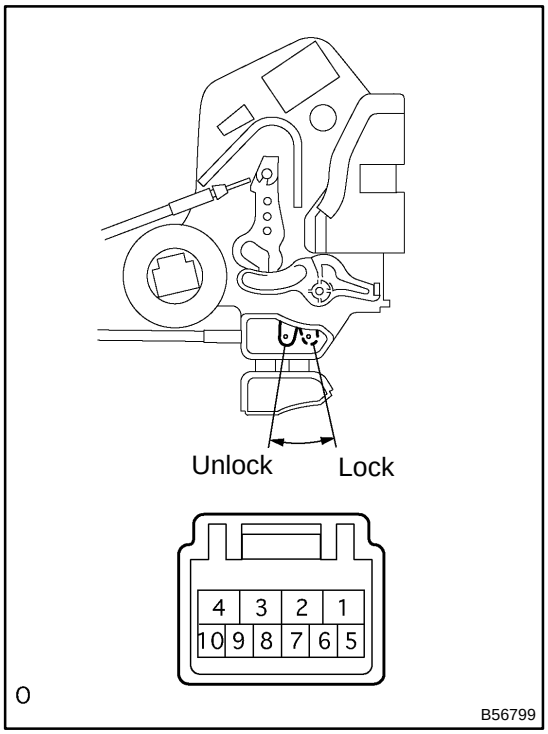

3. INSPECT REAR DOOR W/MOTOR LOCK ASSY RH

(a) Inspect the door lock motor operation.

Standard:

Measuring condition	Operation
Battery positive – Terminal 4 Battery negative – Terminal 1	Lock
Battery positive – Terminal 1 Battery negative – Terminal 4	Unlock

If the operation is not as specified, replace the door lock assembly.

(b) Inspect the position switch continuity.

Standard:

Terminal No.	Door lock position	Specification
6 ⇔ 9	Lock	No continuity
	Unlock	Continuity

If the continuity is not as specified, replace the door lock assembly.

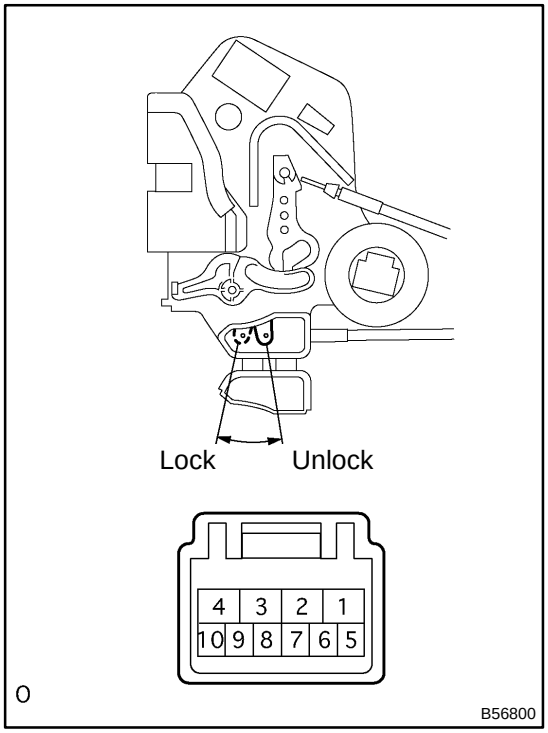

4. INSPECT REAR DOOR W/MOTOR LOCK ASSY LH

(a) Inspect the door lock motor operation.
Standard:

Measuring condition	Operation
Battery positive – Terminal 4 Battery negative – Terminal 1	Lock
Battery positive – Terminal 1 Battery negative – Terminal 4	Unlock

If the operation is not as specified, replace the door lock assembly.

(b) Inspect the position switch continuity.
Standard:

Terminal No.	Door lock position	Specification
6 ⇔ 9	Lock	No continuity
	Unlock	Continuity

If the continuity is not as specified, replace the door lock assembly.

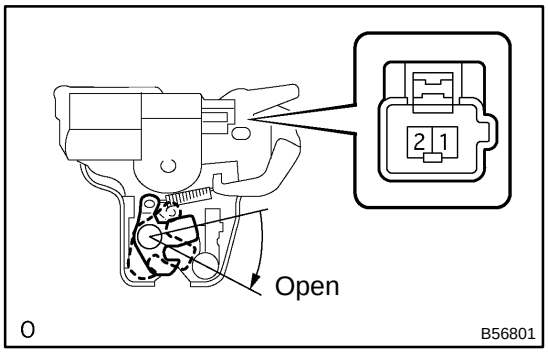

5. LUGGAGE COMPARTMENT DOOR LOCK ASSY

(a) Inspect the door lock motor operation.
Standard:

Measuring condition	Operation
Battery positive – Terminal 1 Battery negative – Lock body	Open

If the operation is not as specified, replace the door lock assembly.

WIRELESS DOOR LOCK CONTROL SYSTEM

73085–01

ON–VEHICLE INSPECTION

1. CHECK WIRELESS DOOR LOCK CONTROL FUNCTION

HINT:

The switch described in this text is a switch for transmitting (LOCK switch and UNLOCK switch), built in the door control transmitter.

(a) Vehicle's initial condition (condition of wireless control possible)
- No key in the ignition key cylinder
- All doors closed (door open indicator off)
- All doors locked

(b) Check the basic function.
(1) Check whether the LED lights up 3 times when each switch is pressed 3 times.

HINT:

In case that the LED does not light up when the switch has been pressed 3 times or more, it may be caused by the dead battery.

(2) In the remote control operational area, check that all the doors will lock or unlock when the switch has been pressed for approximately 1 second. It is, however, not the case where the key is in the ignition key cylinder or any of the doors is open.

HINT:

The UNLOCK operation is possible even when any of the doors is open.

(3) Check that the luggage compartment door opens when the trunk switch has been pressed for 1 second (the operation is possible even when a door is open).

(c) Check the automatic locking function.
(1) Check that all doors will automatically lock as long as any of the doors has not been opened or all doors have not been locked within approximately 30 seconds after all doors are unlocked by pressing the switch.
(2) Under the above condition, the automatic locking function will not work if any of the doors has been opened or all doors have been locked within approximately 30 seconds.

(d) Check the switch operation fail–safe function.
(1) Check that doors are not locked or unlocked by the switch while the key is in the ignition key cylinder. However, the time of the discrimination code registration mode is excepted.

(e) Check the chattering prevention function.
(1) Check that the corresponding operation will be done only once but not repeat continuously when the switch has been kept pressing. However, if the operations are carried out by approximately 1 second interval, from the time to release the switch till the time to press it again, check that a corresponding operation to the switch that will be pressed next will be carried out.

(f) Check the repeat function.
(1) Check that all doors will automatically lock once again in 1 second after the lock switch has been pressed while the move of the driver's door control knob, which is in unlocking state, is being blocked forcibly.

(g) Check the operation stop function when a door is open or not completely close.
(1) Check that doors are not locked or unlocked by the switch while any of the doors is open or not completely close. However, tunk lock doors and to open the tunk are possible.

(h) Check the hazard flashing and buzzer sounding function (answer back).
(1) Check that the hazard lights will flash and also the buzzer will sound once (when locked) or twice (when unlocked) simultaneously with all doors' locking or unlocking operation, when the switch is pressed.

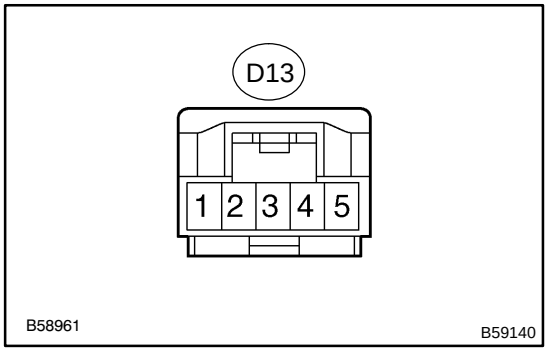

2. CHECK WIRELESS CONTROL RECEIVER

(a) Disconnect the D3 receiver connector and check that the connector on the wire harness side.
(b) Check the voltage and continuity of each terminal of the wire harness side connector.

Standard :

Symbols (Terminal No.)	Wiring color	Condition	Specification
GND (D13–1) ⇔ Body ground	W–B	Constant	Continuity
+B (D13–5) ⇔ Body ground	R	Constant	10 – 14 V

HINT:
If the value is not as specified, the wire harness side may be defective.

(c) Using an oscilloscope, connect the receiver connector and check the voltage.

Standard :

Symbols (Terminal No.)	Wiring color	Condition	Specification
RDA (D13–2) ⇔ Body ground	L–W	All door is closed → Door control transmitter ON	Below 1 V → 6 – 7 V → Below 1 V

HINT:
If the value is not as specified, the wire harness side may be defective.

DOOR CONTROL TRANSMITTER

73084–01

REPLACEMENT

1. REGISTRATION OF RECOGINITION CODE

HINT:

- The add mode is used to retain already registered codes while registering new recognition codes. This mode is used when adding a transmitter. If the number of registered codes exceeds 4, previously registered codes will be correspondingly erased in order, starting from the first registered code.
- The rewrite mode is used to erase all the previously registered codes and register only new recognition codes. This mode is used when exchanging the transmitter or the door control receiver with new one.
- The prohibition mode is used to erase all the registered codes and cancels the wireless door lock function. Use this mode when the transmitter is lost.
- The confirmation mode is for confirming how many recognition codes have already been registered before an additional registration of a recognition code.

(a) The vehicle should be in the following conditions.
  (1) The key is not inserted in the ignition key cylinder.
  (2) Driver's door is OPENED. (The other doors are CLOSED)
  (3) Driver's door is UNLOCKED.

(b) Perform the followings after the above operations.
  (1) Insert and remove the key from the ignition key cylinder twice within 5 seconds.
  (2) After the above operations, close and open the driver door twice within 40 seconds. Then insert the key into the ignition key cylinder and remove it.
  (3) After the above operations, close and open the driver door twice within 40 seconds. Then insert the key into the ignition key cylinder and close the door.
  (4) Turn the ignition switch from LOCK to ON and back to LOCK at approximately. 1 second interval 1 to 5 times to select the mode. Then remove the key from the ignition key cylinder.

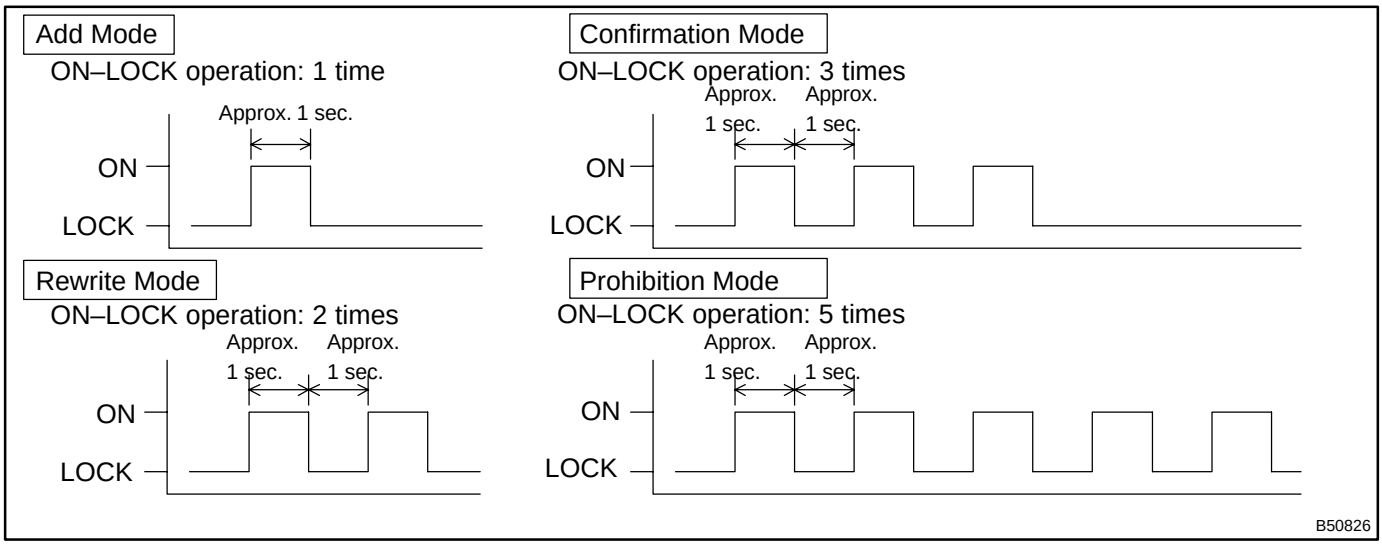

NOTICE:

If the number of the ON–LOCK operation of the ignition switch is 0, 4 or 6 or more, the operation will finish without any signs.

(5) Check that the MPX body ECU automatically performs the LOCK–UNLOCK operation within 3 seconds to inform the operator of a selected mode.

HINT:

In the confirmation mode as shown in the illustration, when the LOCK–UNLOCK operation is performed twice, it means that 2 types of recognition codes are registered.

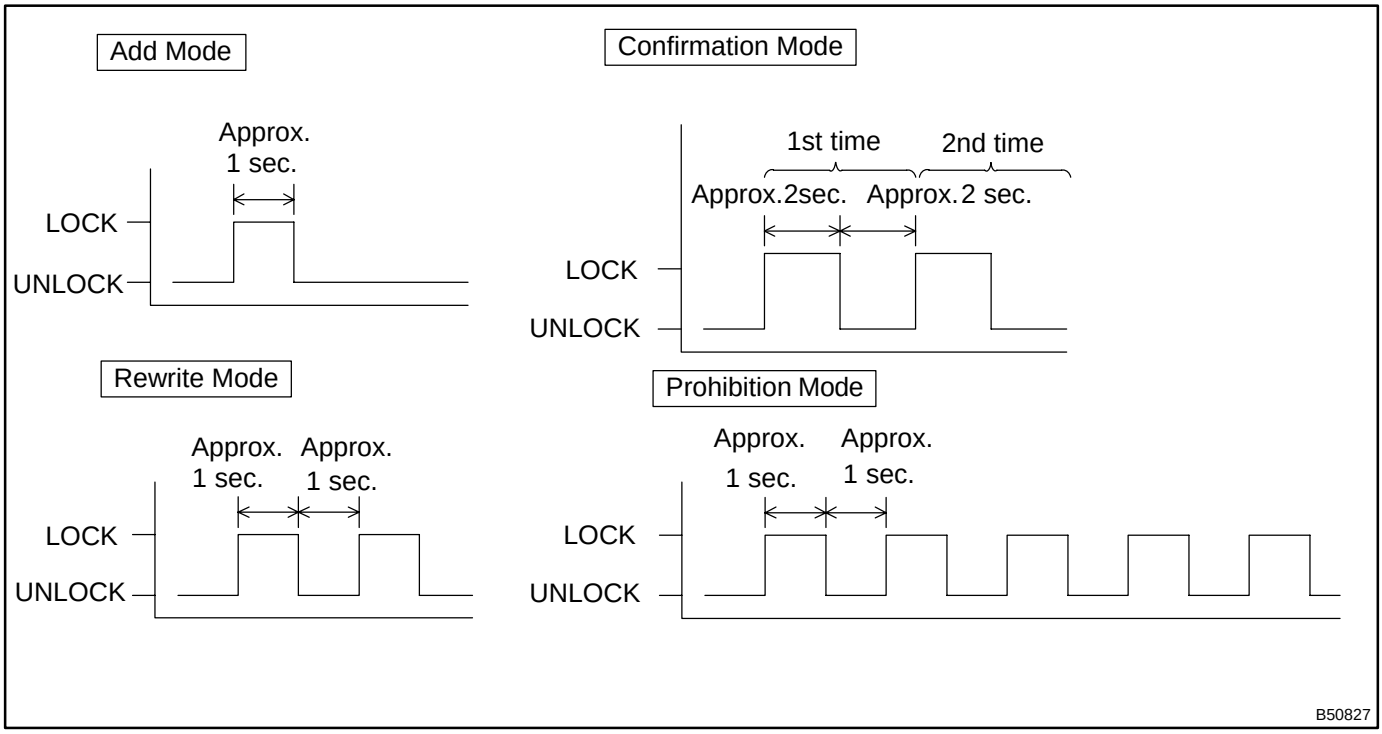

NOTICE:

In the confirmation mode, if the number of the registration code is 0, the ON–LOCK operation is automatically performed 5 times.

HINT:

If the prohibition mode and confirmation mode are selected, the registration of the recognition code is completed at this time.

(c) Register a transmitter.

(1) Within 40 seconds after the add mode or the rewrite mode has been selected, press the LOCK and UNLOCK switches on the transmitter simultaneously for 1.0 – 1.5 seconds.

(2) Within 3 seconds, press either one of the switches for more than 1.0 second.

(3) Within 3 seconds, the LOCK–UNLOCK operation will be automatically performed once if the registration of the recognition code of the transmitter has been completed correctly. If the LOCK–UNLOCK operation is performed twice, the registration of the recognition code has failed. Perform the registration procedure from the beginning once again.

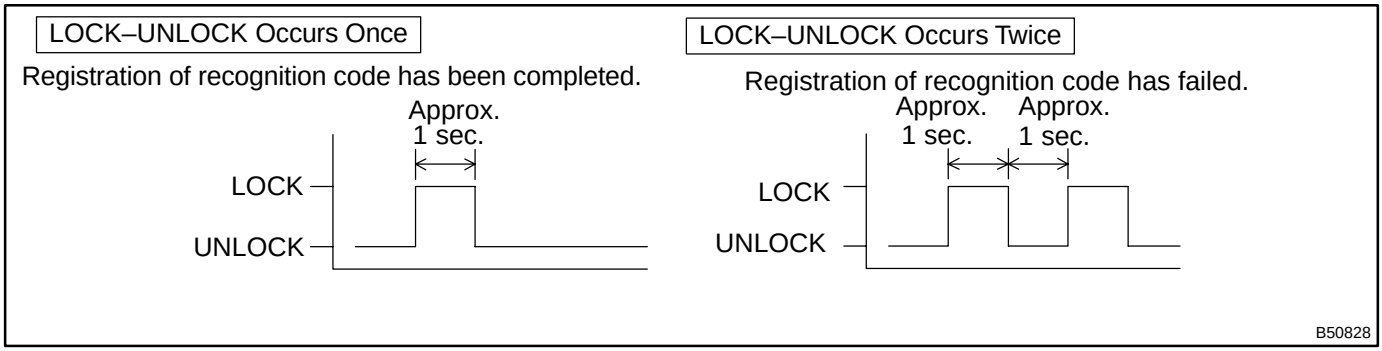

(4) When continuing the registration, register the next transmitter within 40 seconds after the previous registration.

HINT:

4 types of recognition codes can be registered at once.

(d) If even one of the following conditions is satisfied, the registration of the recognition code is completed.

(1) 40 seconds have elapsed since the response of the door control relay.

(2) The driver's door is opened.

(3) The key plate is inserted in the ignition key cylinder.

(4) 4 types of recognition codes are registered at one time.

KEY UNLOCK WARNING SYSTEM

7307U–02

LOCATION

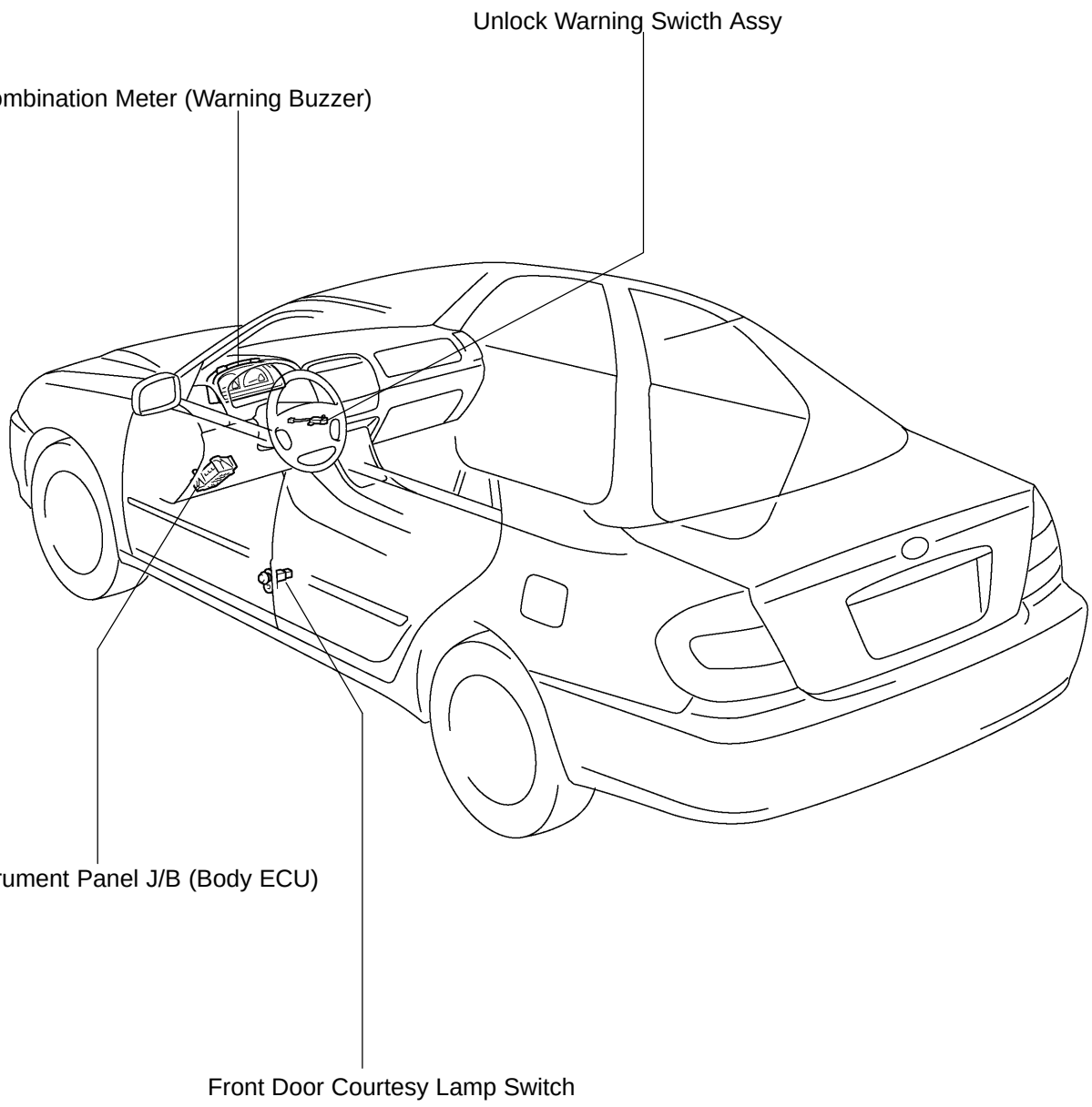

O

B56177

7307V–02

ON–VEHICLE INSPECTION

1. FUNCTION CHECK

(a) Check that the key reminder warning buzzer will sound.
  (1) With the driver's door close, insert the key into the ignition switch lock cylinder, and then turn the key to the LOCK or ACC.
  (2) Then, check that the buzzer will sound intermittently if the driver's door is opened.

(b) Check that the key reminder warning buzzer will stop.
  (1) Check that the buzzer will stop if any of the following operations is done while the buzzer is sounding.
  (2) Close the driver's door (front door courtesy lamp switch assembly is off).
  (3) Turn the ignition switch ON.
  (4) Pull out the key from the ignition switch lock cylinder.

2. CHECK INSTRUMENT PANEL JUNCTION BLOCK ASSY (BODY ECU) (LEFT SIDE)

(a) Disconnect the B6 body ECU connector.

(b) Check the connector terminal continuity.

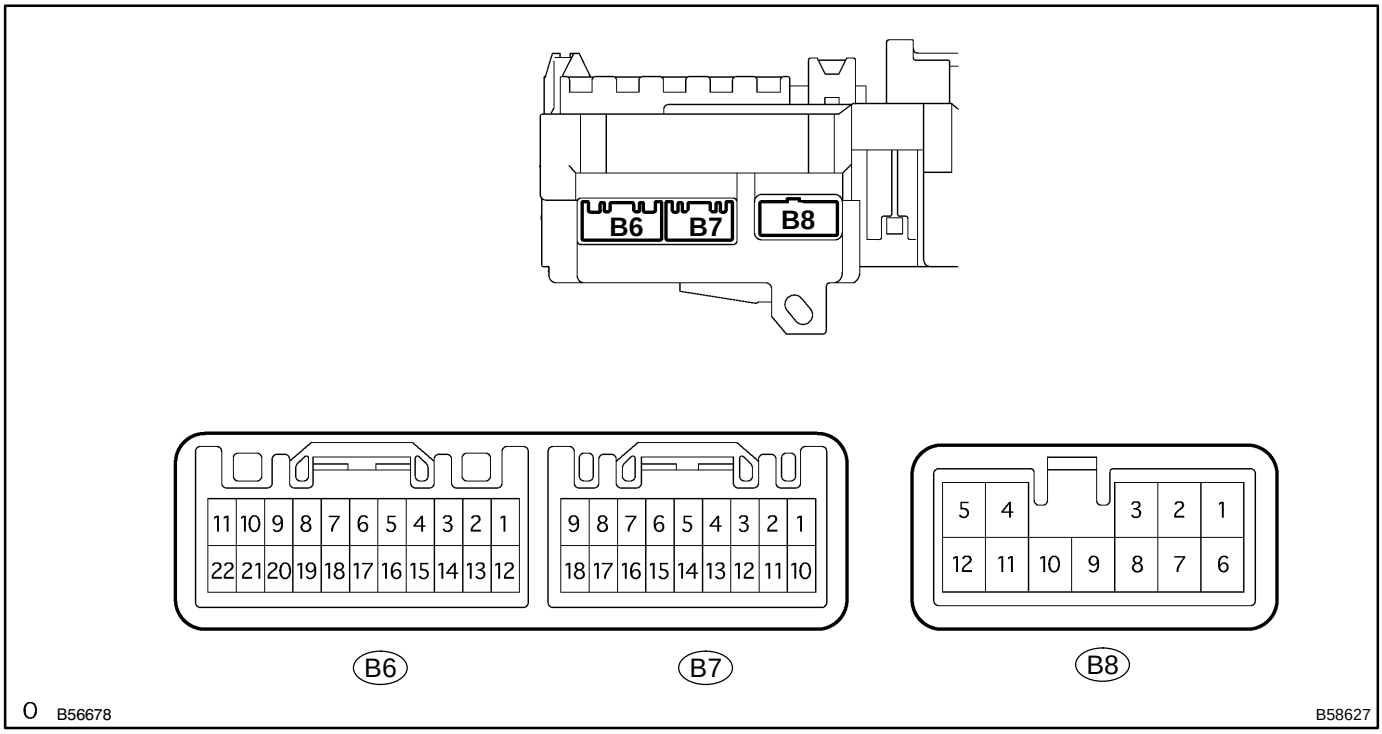

Standard:

Symbols (Terminal No.)	Wiring color	Condition	Specified condition
KSW (B6–19) ⇔ Body ground	L ⇔ Body ground	No key in ignition switch lock cylinder → Key inserted	No continuity→Continuity

HINT:

If the value is not as specified, check and replace the wire harness side.

(c) Reconnect the connector.

(d) Check the connector terminal voltage.

Standard:

Symbols (Terminal No.)	Wiring color	Condition	Specified condition
DCTY (B8–1) ⇔ Body ground	R–G ⇔ Body ground	Driver's door fully closed→Opened	10 – 14 V → 0 V

HINT:

If the value is not as specified, check the instrument panel J/B side.

3. CHECK INSTRUMENT PANEL JUNCTION BLOCK ASSY (BODY ECU) (REAR SIDE)

(a) Disconnect the 2F and 2G connectors.

(b) Check the voltage and continuity between the connector terminals.

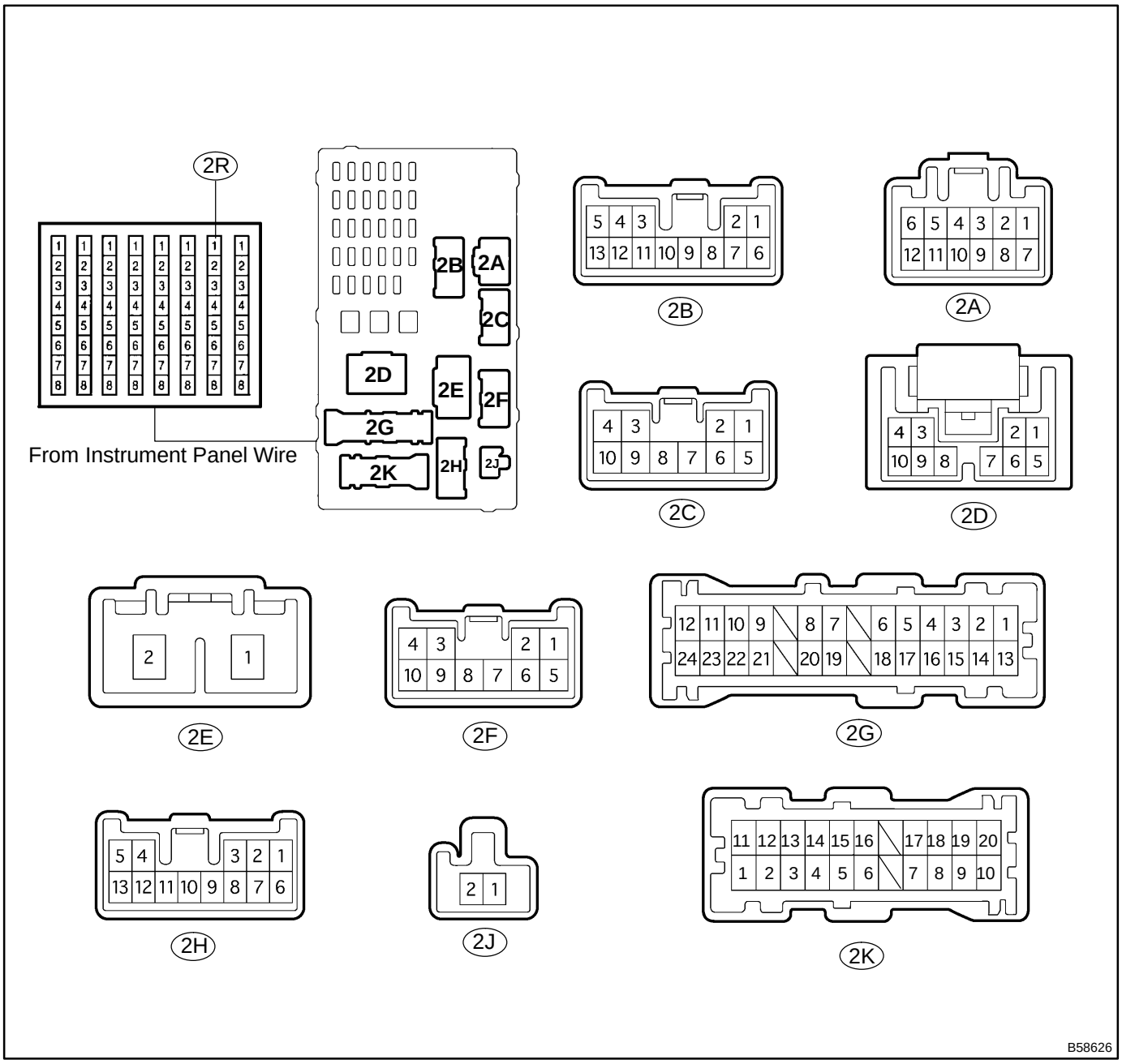

Standard:

Symbols (Terminal No.)	Wiring color	Condition	Specified condition
B (2F–7) ⇔ Body ground	R ⇔ Body ground	Constant	10 – 14 V
BDR1 (2G–14) ⇔ Body ground	L–W ⇔ Body ground	Constant	10 – 14 V
GND (2R–8) ⇔ Body ground	W–B ⇔ Body ground	Constant	Continuity

HINT:

If the value is not as specified, check and replace the wire harness side.

7307W–02

PROBLEM SYMPTOMS TABLE

Symptom	Suspected Area	See page
Key unlock warning buzzer does not sound	1. Unlock warning switch	73–15
	2. Front door courtesy lamp switch	73–15
	3. Instrument panel J/B (Body ECU)	73–12
	4. Combination meter	–
	5. Wire harness	–

INSPECTION

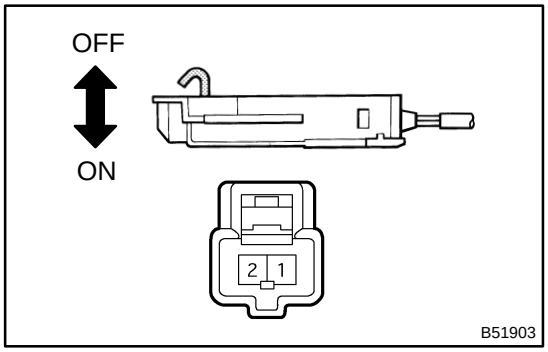

1. INSPECT UN–LOCK WARNING SWITCH ASSY

(a) Check the switch continuity.

Standard:

Terminal No.	Condition	Specification
1 ⇔ 2	Switch pressed in	Continuity
	Switch not pressed in	No continuity

If the continuity is not as specified, replace the switch.

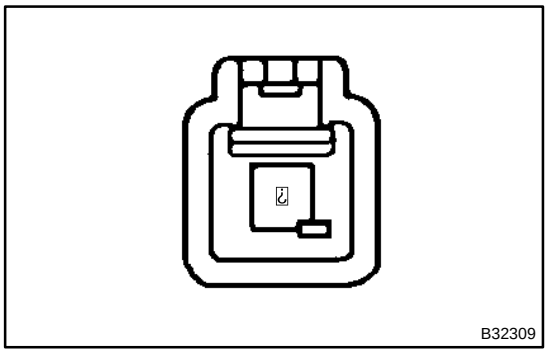

2. INSPECT COURTESY LAMP SWITCH

(a) Check the switch continuity.

Standard:

Terminal No.	Condition	Specification
1 ⇔ Switch body	FREE	Continuity
	PUSH	No continuity

If the continuity is not as specified, replace the switch.

THEFT DETERRENT SYSTEM

7307L–01

ON–VEHICLE INSPECTION

1. DESCRIPTION OF AUTOMATIC ALARMING CONDITION

Condition	Description
Disarming condition	Alarm system is not set. (Theft detection is not performed)
Arming preparation condition (30 sec.)	Preparing for the alarm system being set after the system setting conditions are satisfied. (Theft detection is not performed)
Arming condition	Alarm system is set. (Theft detection is performed)
Alarming condition	Alarming with hazard warning lights and horns by detecting a theft. (Alarming is kept for 60 sec.)

2. INSPECT AUTOMATIC ALARM OPERATION

HINT:

- Wireless operation written in this text shows the operation of the ”LOCK/UNLOCK” and the door control transmitter switch operation and each operation as well.
- All doors written in this text shows ”4–door”.

(a) Disarming condition → arming preparation condition (with no key in the ignition switch lock cylinder).
  (1) Lock all doors via the wireless operation when all doors, hood and back door are closed.

(b) Arming preparation condition → Arming condition (30 seconds have elapsed since the disarming preparation condition)

(c) Arming condition → Alarming condition (alarming functions when any of the following conditions is satisfied)
  (1) Any of the doors or hood is open.
  (2) Any of the doors is unlocked by any ways except the wireless operation.
  (3) The hood is open.
  (4) The battery is reconnected.
  (5) The ignition terminal is short–circuited.
  (6) The self power siren sounds at the same time when the battery is disconnected.

(d) Alarming (arming) condition → Disarming condition (if step (1) is satisfied during the arming condition, it enters into the disarming condition. Also, if step (1) is satisfied during the alarming condition, it stops alarming and enters into the disarming condition.)
  (1) All doors are unlocked by the wireless operation.

(e) Alarming condition (after the condition (c) has been satisfied, it starts the alarming condition, such as the hazard light’s flashing, dome in lamp’s flashing, horn’s sounding and security siren’s sounding for 60 seconds, and the doors are locked forcibly (If any of the doors is unlocked).

HINT:

It transfers into the arming condition 60 seconds after the alarming.

(f) Arming preparation condition → Disarming condition (if any of the following conditions is satisfied during the arming preparation condition, it enters into the disarming condition.
  (1) Any of all doors is unlocked.
  (2) Any of all doors and the back door is open.
  (3) The hood is open.
  (4) The key is inserted into the ignition switch lock cylinder.
  (5) The battery is reconnected.
  (6) The ignition switch is turned ON.

3. CHECK OUTPUTS OF INDICATOR

(a) Check that the indicator light comes on in the following condition.

Condition	Indicator light
Disarming condition (Immobilizer unset)	OFF
Disarming condition (Immobilizer set)	Blink
Arming preparation condition	ON
Arming condition	Blink
Alarming condition	ON

4. THEFT DETERRENT SYSTEM

When the system is set to the theft deterrent mode and any of the following conditions are met, the system sounds the horns and flashes the headlights and the taillights for approximately 1 minute. At the same time the system locks all doors (If all doors are not locked at once, the system repeats door locking operation every 0.38 seconds during the one minute alarming time).

There are 2 modes in this system; one is active mode and another is passive mode.

All initial settings are performed in the active mode. It can be switched to the passive mode by a specified operation.

- Any of the doors (including the engine hood and luggage compartment door) is unlocked or opened without the key. *1
- The battery terminal is disconnected and reconnected.
- The system receives a panic signal from remote keyless entry. *2

*1: Only active arming mode.

*2: When the ignition key is not inserted in the key cylinder.

There are 4 conditions in this system which are disarming condition, disarming preparation condition, arming condition and alarming condition.

(a) Disarming condition:
  (1) When a user is near the vehicle.
  (2) When the alarming function does not operate.
  (3) When the theft deterrent function does not operate.

(b) Disarming preparation condition:
  (1) Time from a user locks a door to be leaves the vehicle.
  (2) Time until transferring to the disarming condition.
  (3) When the theft deterrent function does not operate.

(c) Arming condition:
  (1) When a user leaves the vehicle completely.
  (2) When the theft deterrent function operates.

(d) Alarming condition:
  (1) In this condition, once a theft is detected, lights will flash and horns will sound to let people around the vehicle know about the theft.
  Refer to the table for alarming method or time.

Alarming method	Horn
	Security horn
	Headlight
	Taillight
Alarming time	60 seconds
Alarming output	Continuous 0.40 sec. (ON) 0.40 sec. (OFF)

In the arming condition, when either of doors is unlocked and no key is in the key cylinder, force lock signal is output.

5. ACTIVE ARMING MODE

Disarming condition (No key inserted in ignition cylinder.)

Any of the following conditions is met
- When all doors and engine hood are closed, lock all the doors using a key.
- When all doors and engine hood are closed, lock all the doors using wireless remote function.
- When all doors and engine hood are closed, open and close either of doors and engine hood then close and lock all doors and engine hood.

Disarming preparation condition

Any of the following conditions is met ● Close and open one of doors and engine hood. ● Lock and unlock either of doors. ● Insert a key into the ignition key cylinder. ● Reconnect the battery.	The following condition is met ● After 30 seconds have elapsed when the engine hood is closed and all doors are locked.

Arming condition

Any of the following conditions is met ● Unlock the locked doors using the wireless remote function. ● Unlock the locked doors using the key. ● Insert the key into the ignition key cylinder and turn the ignition key ON.	Any of the following conditions is met ● Either of closed doors opens. ● Either of locked doors is unlocked by any way other than key or wireless remote function. ● The closed engine hood is opened. ● The battery is reconnected. ● Ignition switch is turned to ON.

Alarming condition

In this mode, once a theft is detected, lights will flash and horns will sound to let people around the vehicle know about it. The above specified alarming time passes.	Any of the following conditions is met ● Unlock the locked doors using the wireless remote function. ● Unlock the locked doors using the key. ● Insert the key into the ignition key cylinder and turn the ignition key ON.

INDICATOR LIGHT OUTPUT:

Condition	Indicator light
Disarming condition	OFF
Disarming preparation condition	ON
Arming condition	OFF
Alarming condition	ON

HINT:
Even in the disarming condition, the indicator light flashes (due to a signal output from immobilizer system). The indicator always flashes by receiving a signal from the immobilizer system at any time in the arming condition.

Flashing frequency:
0.2 seconds (ON)
1.8 seconds (OFF)

6. PASSIVE ARMING MODE

- This mode can be switched by the specified operation.
- All initially set modes (when shipped from factory) are active mode. (No passive mode)

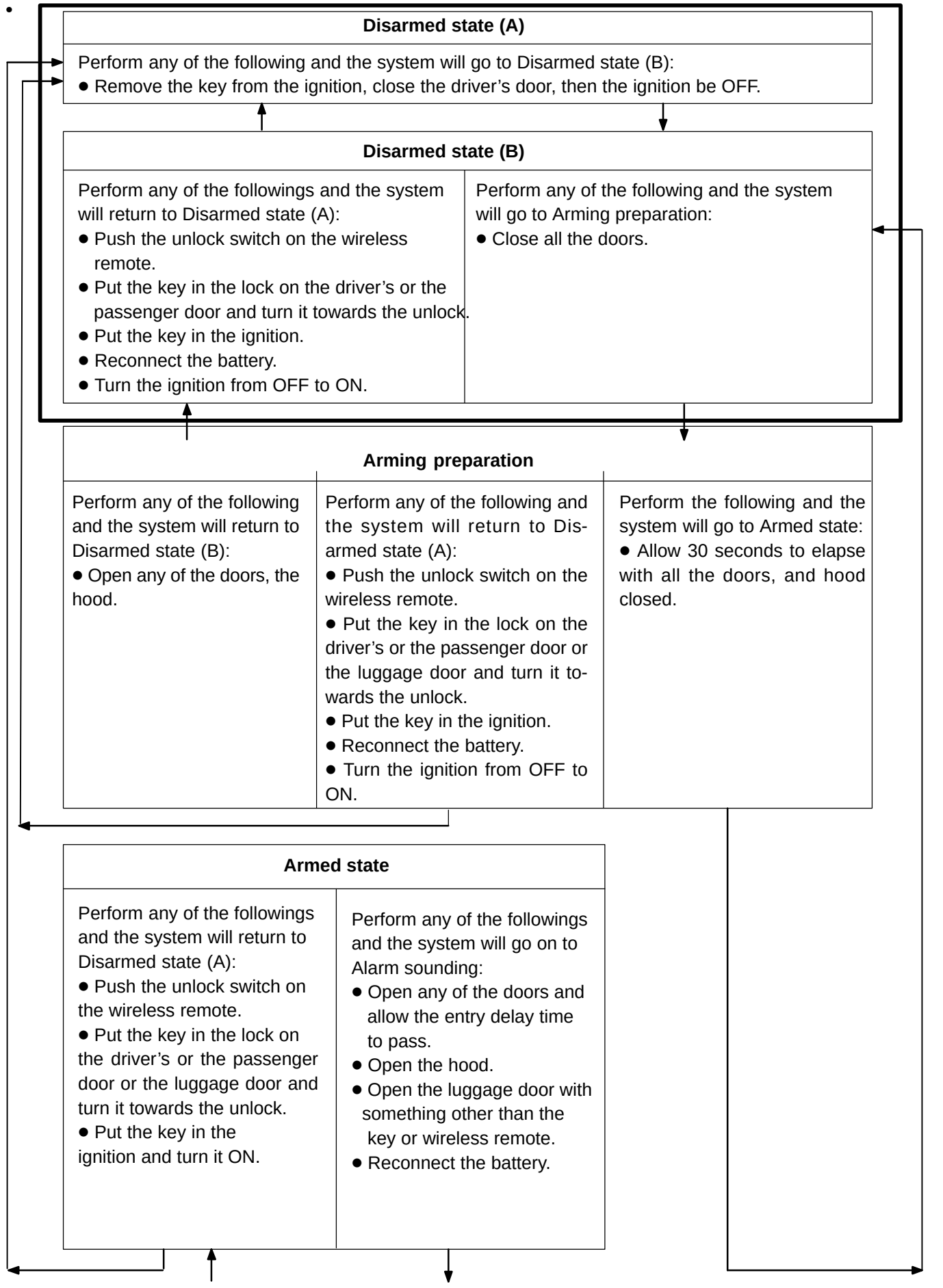
Disarmed state (A)
Perform any of the following and the system will go to Disarmed state (B):
● Remove the key from the ignition, close the driver's door, then the ignition be OFF.
Disarmed state (B)
Perform any of the followings and the system will return to Disarmed state (A):
● Push the unlock switch on the wireless remote.
● Put the key in the lock on the driver's or the passenger door and turn it towards the unlock.
● Put the key in the ignition.
● Reconnect the battery.
● Turn the ignition from OFF to ON.
Perform any of the following and the system will go to Arming preparation:
● Close all the doors.
Arming preparation
Perform any of the following and the system will return to Disarmed state (B):
● Open any of the doors, the hood.
Perform any of the following and the system will return to Disarmed state (A):
● Push the unlock switch on the wireless remote.
● Put the key in the lock on the driver's or the passenger door or the luggage door and turn it towards the unlock.
● Put the key in the ignition.
● Reconnect the battery.
● Turn the ignition from OFF to ON.
Perform the following and the system will go to Armed state:
● Allow 30 seconds to elapse with all the doors, and hood closed.
Armed state
Perform any of the followings and the system will return to Disarmed state (A):
● Push the unlock switch on the wireless remote.
● Put the key in the lock on the driver's or the passenger door or the luggage door and turn it towards the unlock.
● Put the key in the ignition and turn it ON.
Perform any of the followings and the system will go on to Alarm sounding:
● Open any of the doors and allow the entry delay time to pass.
● Open the hood.
● Open the luggage door with something other than the key or wireless remote.
● Reconnect the battery.

•

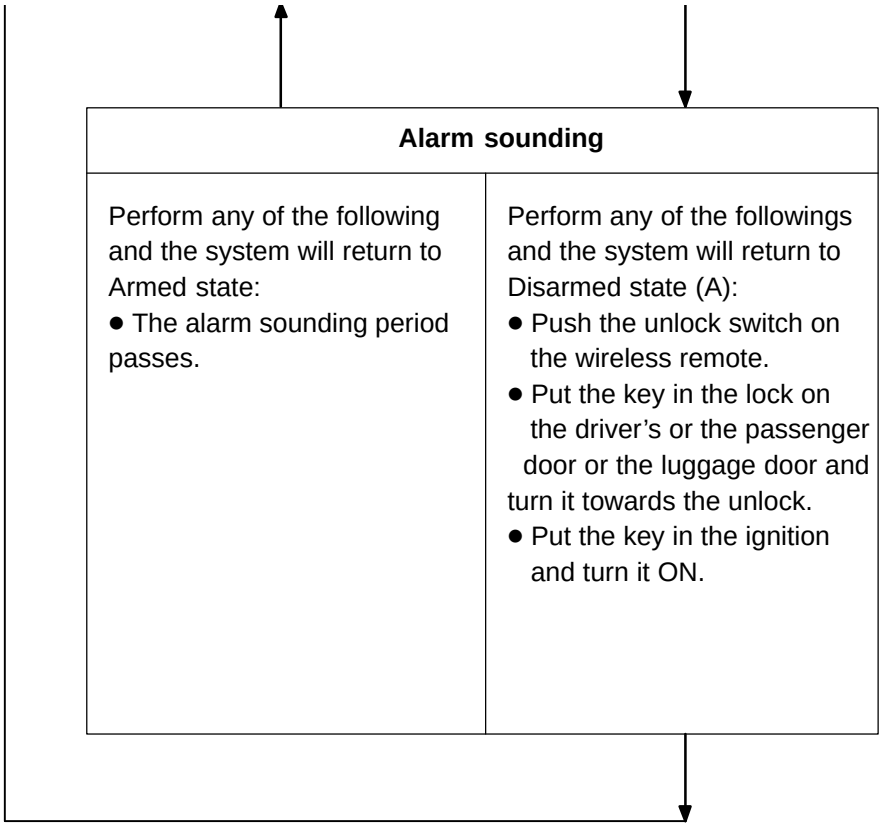
Alarm sounding
Perform any of the following and the system will return to Armed state:
● The alarm sounding period passes.
Perform any of the followings and the system will return to Disarmed state (A):
● Push the unlock switch on the wireless remote.
● Put the key in the lock on the driver's or the passenger door or the luggage door and turn it towards the unlock.
● Put the key in the ignition and turn it ON.

HINT:
When either closed door is opened in the arming condition, entry delay occurs. (14 seconds)
During this time, the mode transfers to the disarming condition when the condition described above is met.
When the condition is not met, the system judges a theft and the mode transfers to the alarming condition.

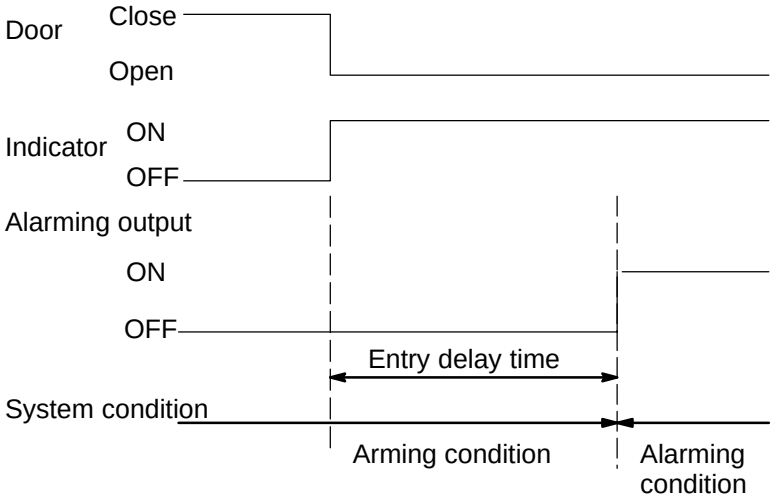

INDICATOR LIGHT OUTPUT:

Condition	Indicator light
Disarming condition	OFF
Disarming preparation condition	ON
Arming condition (Entry delay time)	OFF (ON)
Alarming condition	ON

HINT:
Even in the disarming condition, the indicator light flashes (due to the signal output from immobilizer system). The indicator always flashes by receiving the signal from the immobilizer system at any time in the arming condition.

Flashing frequency:
0.2 seconds (ON)
1.8 seconds (OFF)

- Transfer to active mode: In each passive mode, when ”disarming condition of active mode → disarming preparation transfer condition” is met, the active mode transfers to each condition. In this case, active mode continues until the disarming condition.

Passive mode when transfer condition is met.	Active mode transfer condition
Disarming condition	Disarming preparation condition
Disarming preparation condition	Disarming preparation condition
Arming condition (During entry delay time)	Arming condition (After alarming time has elapsed, arming condition)
Alarming condition	After alarming time has elapsed, arming condition

7. CHANGING METHOD OF PASSIVE MODE (ON or OFF)

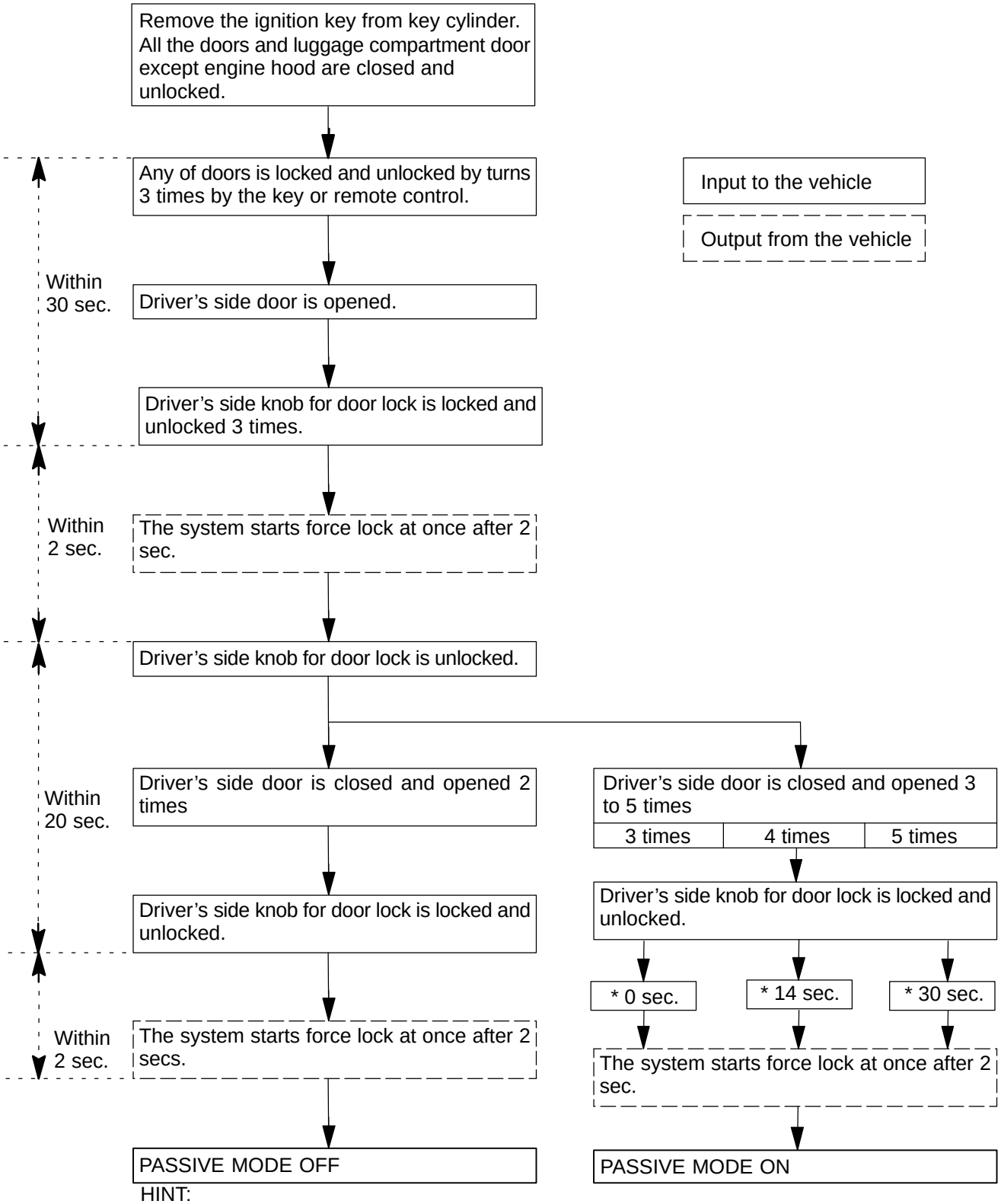

HINT:

- Initial mode is PASSIVE MODE OFF.
- If there is a different signal in the middle of changing. It is invalid.

*: Entry delay time

ENGINE IMMOBILISER SYSTEM

73086–01

REGISTRATION

1. KEY REGISTRATION IN AUTOMATIC REGISTRATION

(a) Registration of a new transponder key.

- This must be done when you install a new ECM.
- The new ECM is in the automatic key code registration mode. The number of key codes for this ECM is already fixed, and so it can be registedered.
  On this type of vehicle, up to 3 key codes can be registered.
- In the automatic registration mode, the key registered last becomes the sub–key.

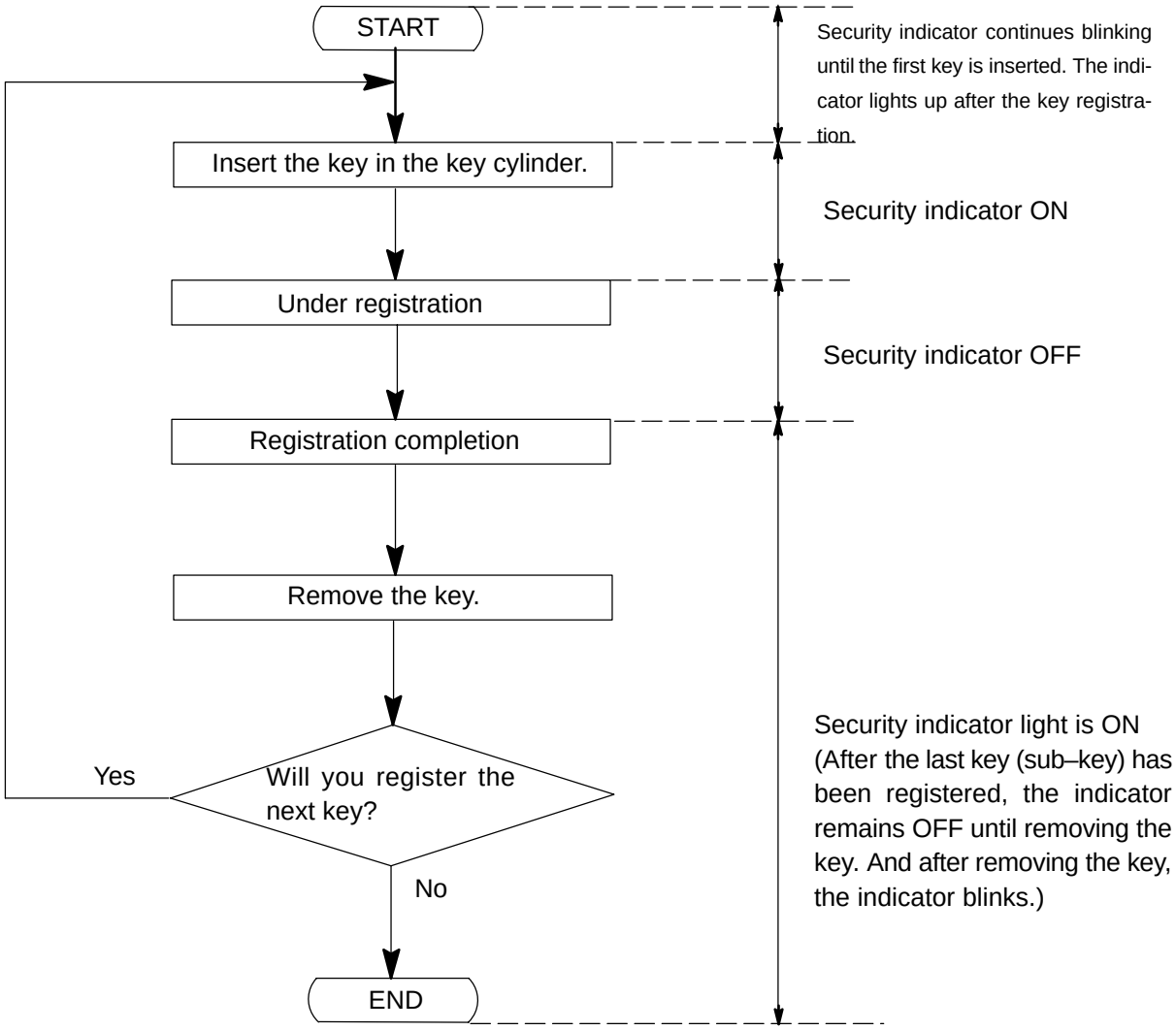

HINT:

- When no key is inserted in the key cylinder in the automatic registration mode, the security indicator always lights on.
- When the immobiliser system operates normally and the key is pull out, the security indicator blinks.
- When key code registration could not be performed in the automatic registration mode, code 2–1 is output from the security indicator. And when inserting the already registered key, code 2–2 is output.

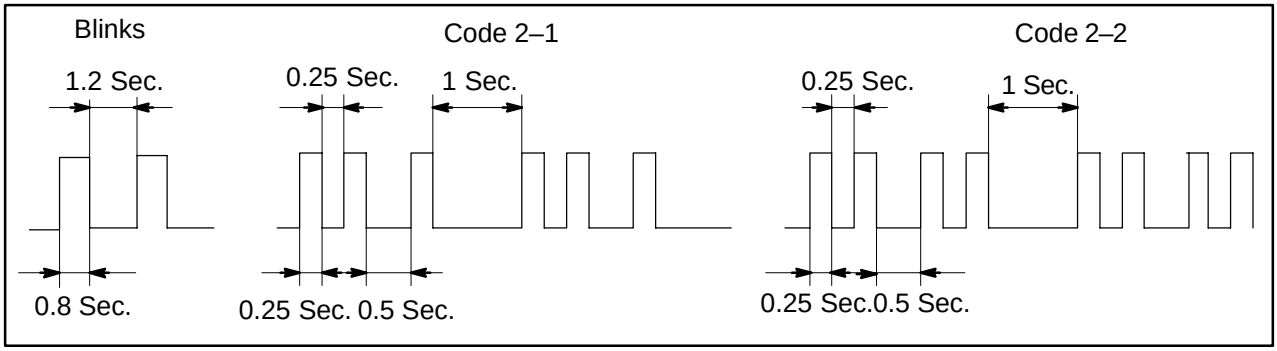

(b) Automatic registration mode completion

If finishing the mode forcibly after registering more than 1 key codes in the automatic registration mode, perform the following procedures.

After 1 more key code has been registered with the master key, perform step (1) or (2) without pulling the key out or inserting the already registered key.

(1) Depress and release the brake pedal 5 times or more within 15 seconds.

(2) With the hand–held tester, require the automatic registration mode completion.

2. REGISTRATION OF ADDITIONAL KEY

There are 2 ways for registration of additional master key; one way is depressing the brake pedal and acceleration pedal and the other way is using the hand–held tester.

HINT:

- It is possible to register up to 7 master key codes including the already registered key code.
- When any operation time described below is over, registration mode will be stopped forcibly.
- When the next procedure is started while the timer is working, the timer stops working, then the next timer starts.
- When replacing ”Ignition Cylinder Key Set” or ”Lock Cylinder Set” and register according to the following procedure using the original master key. However, after the registration of the additional master key, the original master key and the original sub–key are not necessary any more, and there fore registration of those key codes should be deleted.

  (1) Depressing the brake pedal and acceleration pedal:

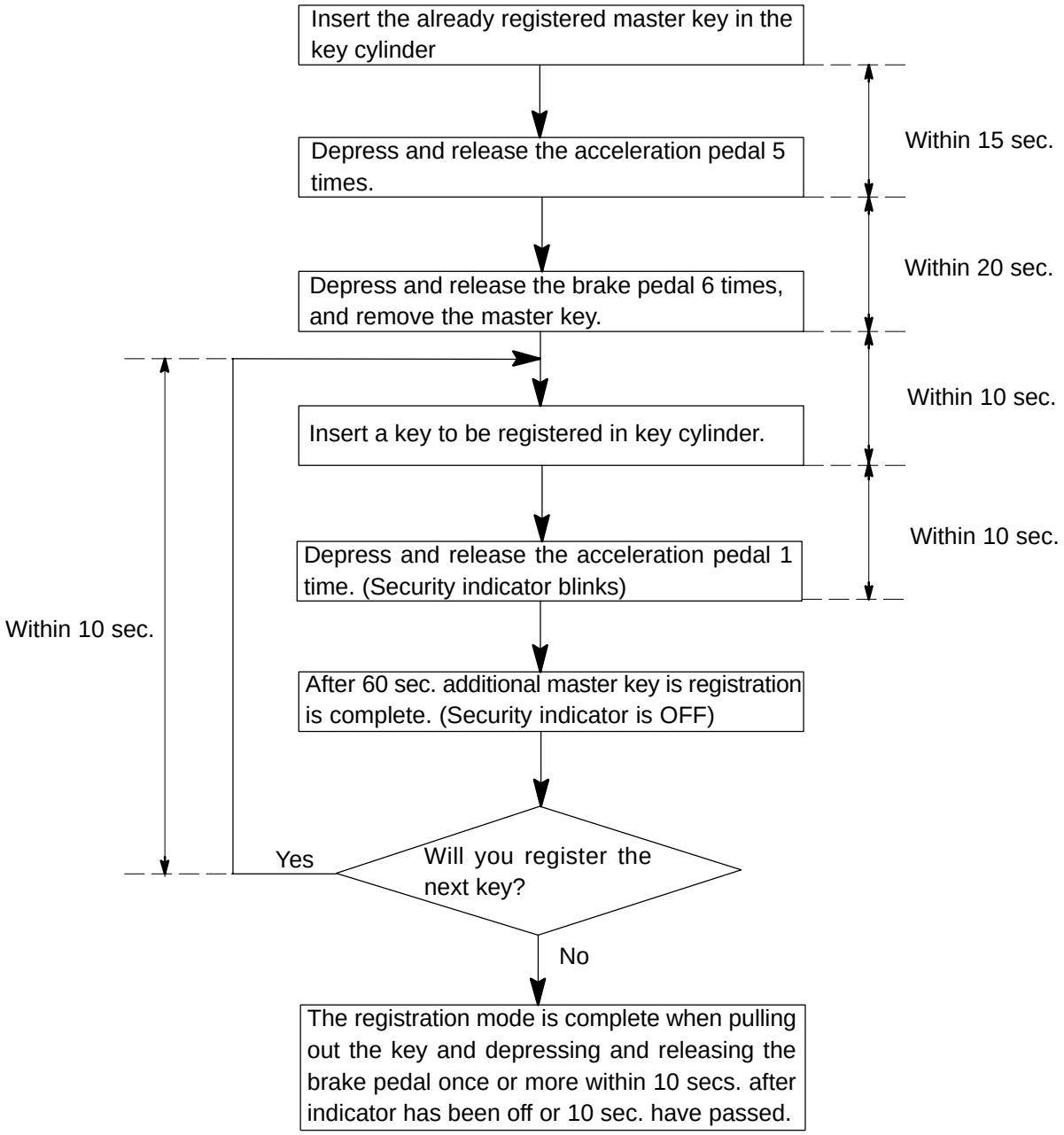

(2) Using the hand–held tester:

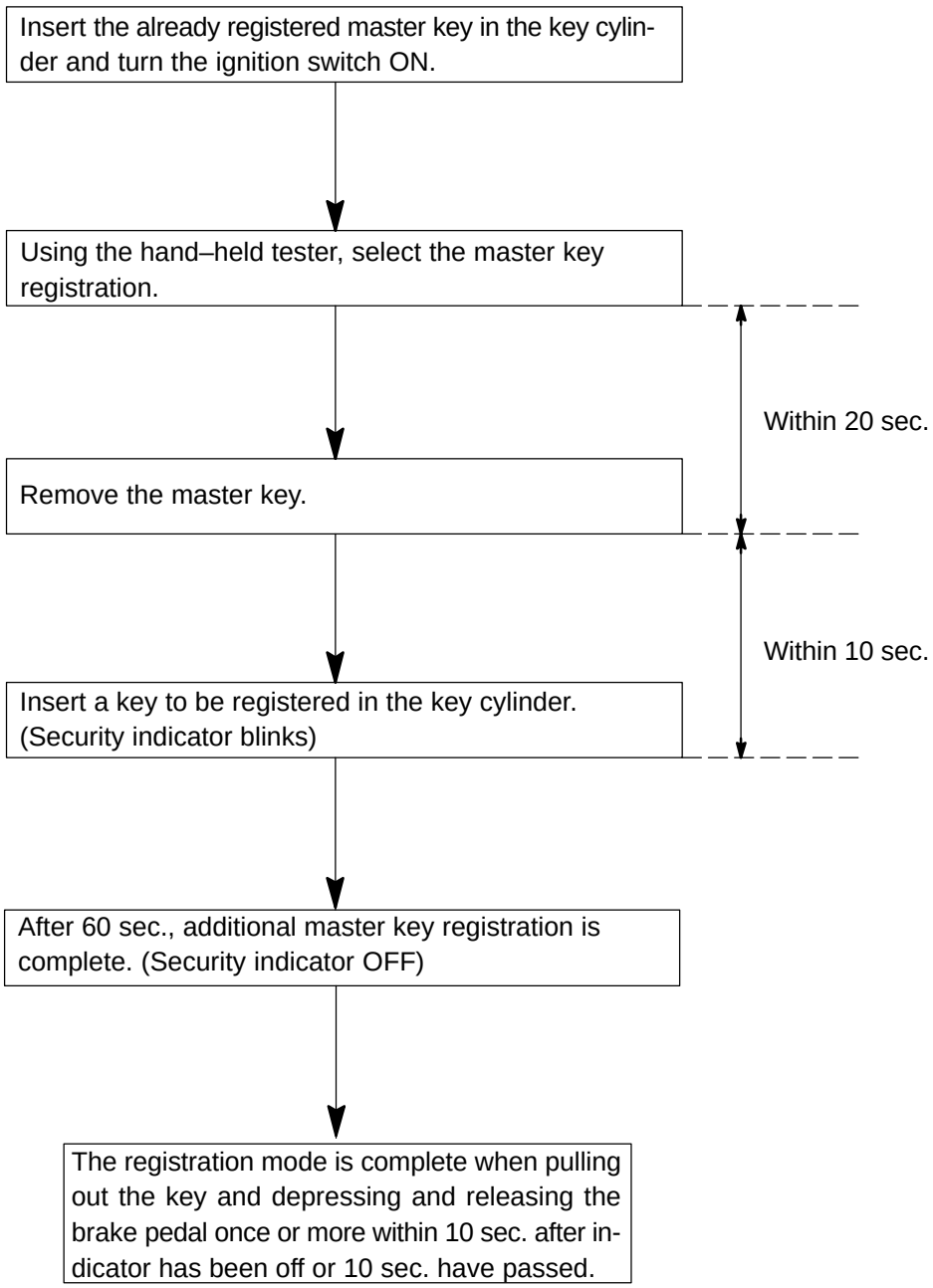

HINT:
Follow the screen of the hand–held tester for more detailed procedure.

3. REGISTRATION OF KEY NUMBER

There are 2 ways for registration of additional sub–key; one way is depressing the brake pedal and acceleration pedal and the other way is using hand–held tester.

HINT:

- It is possible to register up to 3 sub–key codes including the already registered key code.
- When any operation time described below is over, registration mode will be stopped forcibly.
- When the next procedure is started while the timer is working, the timer stops working, then the next timer starts.

(1) Depressing the brake pedal and acceleration pedal:

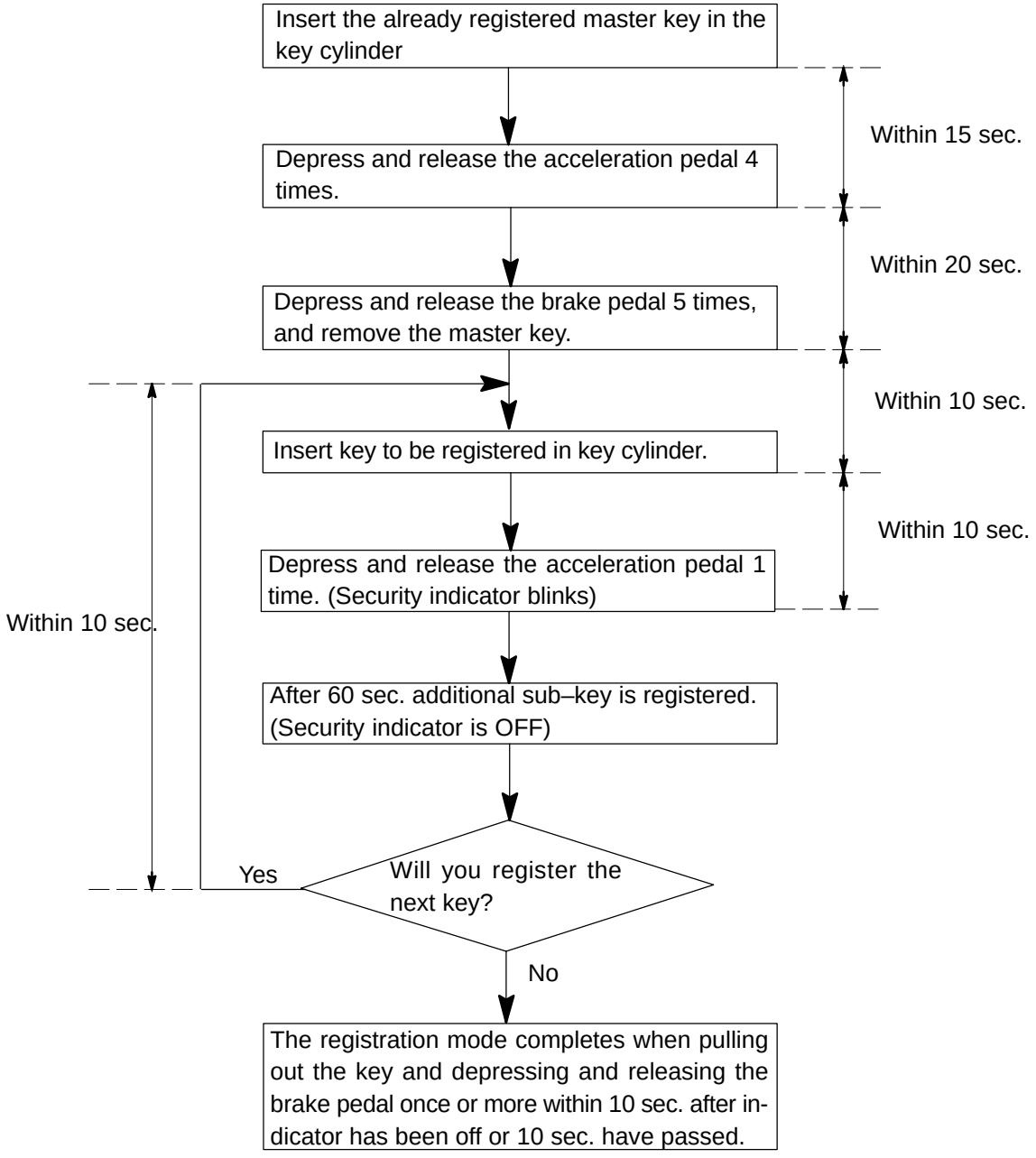

(2) Using the hand–held tester:

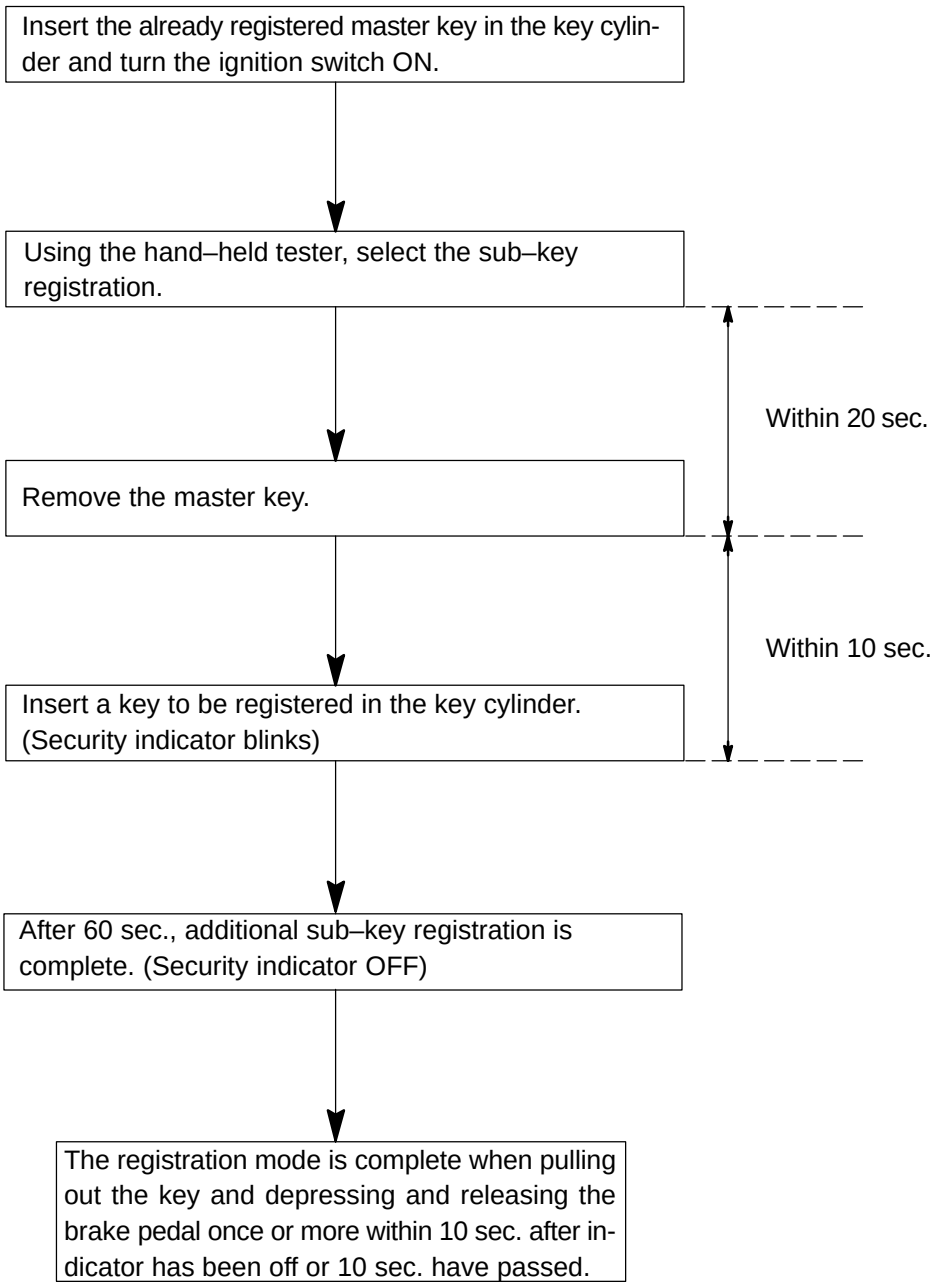

HINT:
Follow the screen of the hand–held tester for more detailed procedure.

4. ERASURE OF KEY CODE

There are 2 ways for erasure of transponder key codes; one way is depressing the brake pedal and acceleration pedal and the other way is using hand–held tester.

HINT:

- Delete all the other master and sub–key codes than a master key code to use the erasing operation. When using the key which was used for deletion, it is necessary to register the code again.
- When any operation time described below is over, registration mode will be stopped forcibly.
- When the next procedure is started while the timer is working, the timer stops working, then the next timer starts.

(1) Depressing the brake pedal and acceleration pedal:

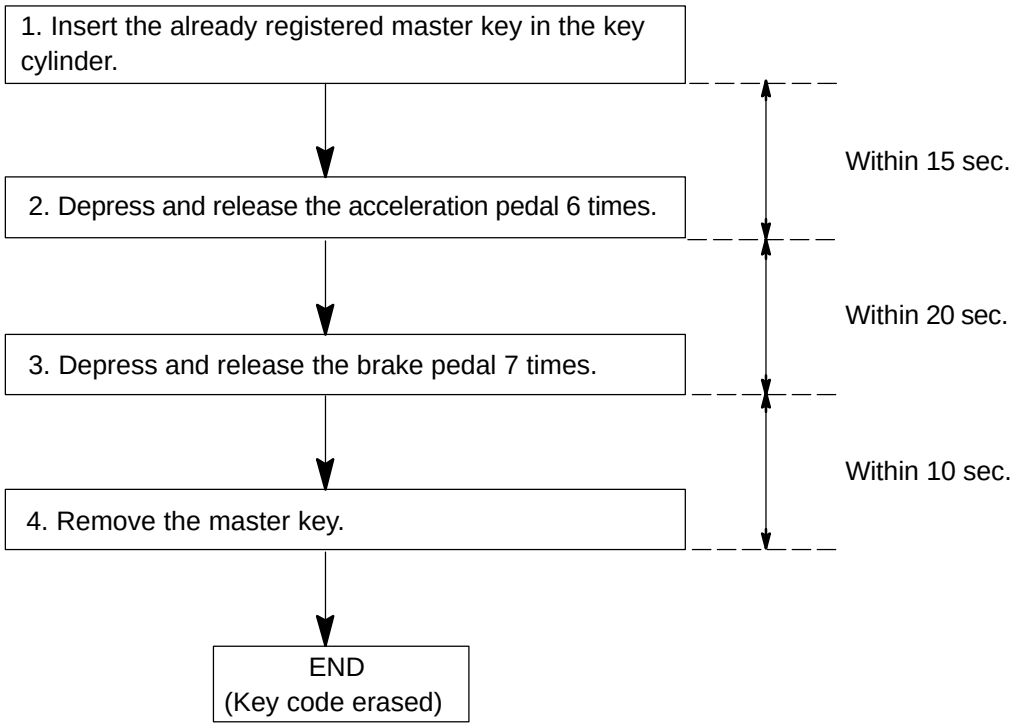

HINT:

When the key cannot be pulled out in step 4, key code deletion is canceled.

(2) Using the hand–held tester:

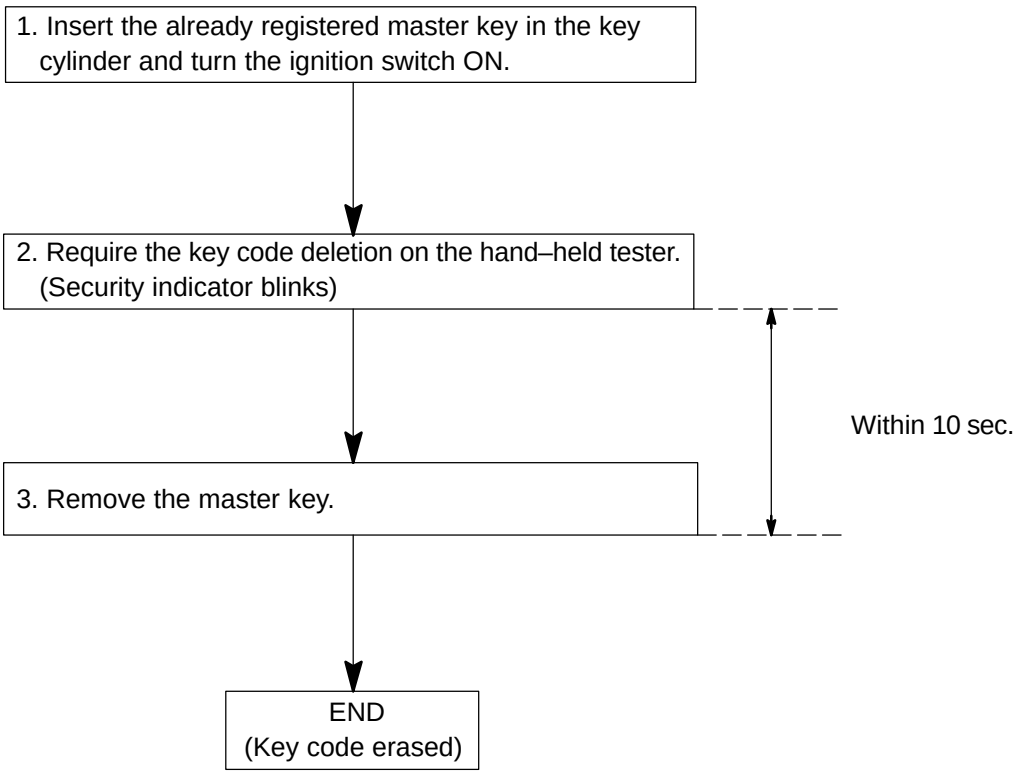

HINT:

- When the key cannot be pulled out in step 3, key code deletion is canceled. (Security indicator is OFF.)
- Follow the screen of the hand–held tester for more detailed procedure.

SLIDING ROOF SYSTEM

LOCATION

7403Y–02

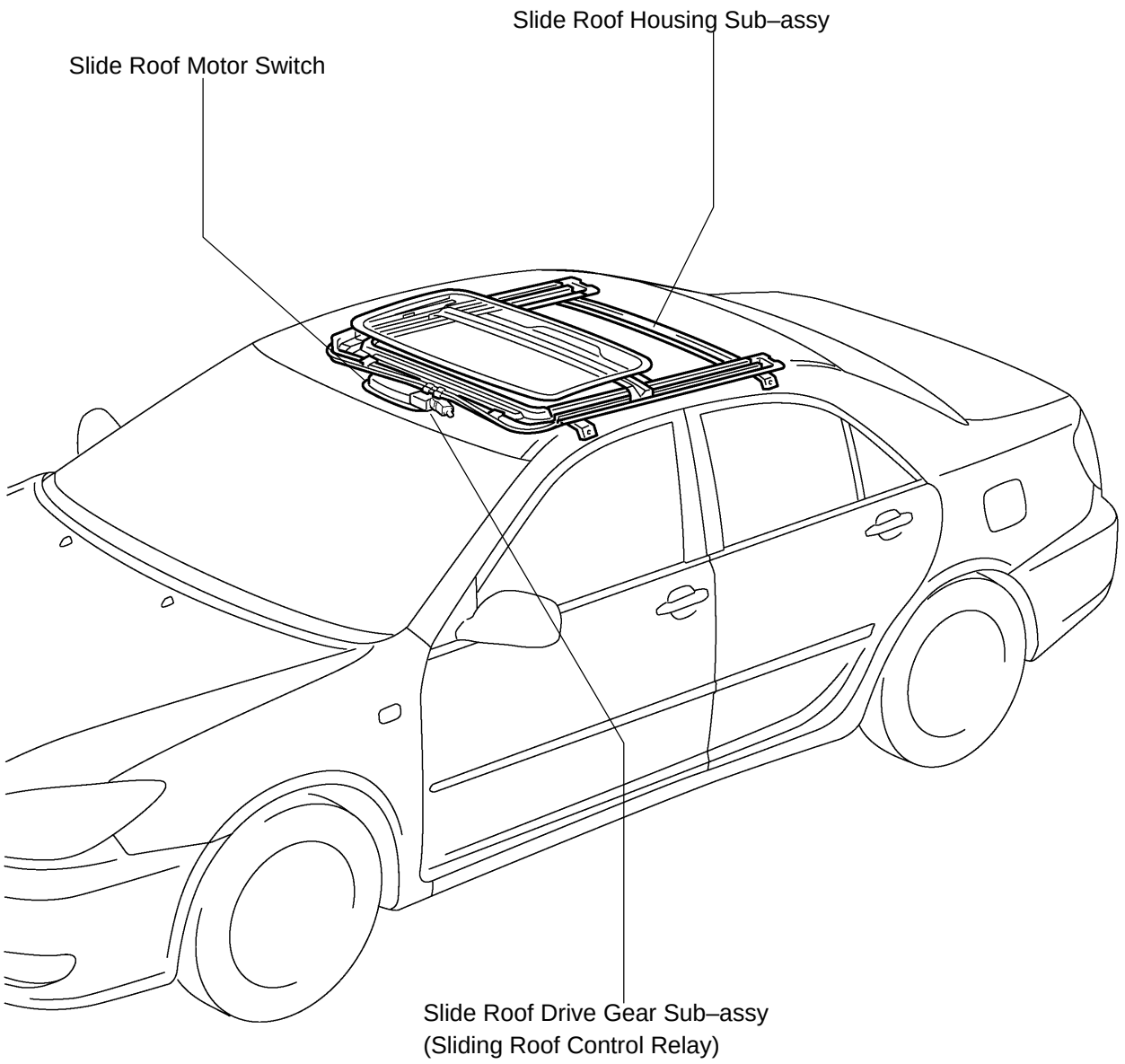

B56178

7403Z–02

ON–VEHICLE INSPECTION

1. INSPECTION SLIDING ROOF FUNCTION

(a) Check the automatic sliding open operation.
  (1) Turn the ignition switch ON.
  (2) Slide close and tilt down the roof glass to the fully close position.
  (3) Check that the roof glass will slide open automatically and stop just before the fully open position by pressing the sliding roof switch OPEN for 0.3 seconds or more.

(b) Check the automatic sliding close operation.
  (1) Turn the ignition switch ON.
  (2) Check that the roof glass will slide close to the fully close position automatically by pressing the sliding roof switch CLOSE for 0.3 seconds or more.
  (3) The roof glass will stop sliding if the sliding roof switch is turned to CLOSE or OPEN while the glass is moving.

(c) Check the automatic tilting UP operation.
  (1) Turn the ignition switch ON.
  (2) Slide close and tilt down the roof glass to the fully close position.
  (3) Check that the roof glass will tilt up automatically to the fully up position by pressing the sliding roof switch UP for 0.3 seconds or more.

(d) Check the automatic tilting DOWN operation.
  (1) Turn the ignition switch ON.
  (2) Check that the roof glass will tilt down by pressing the sliding roof switch DOWN when the roof glass is up.

(e) Check the operation function after key–OFF.
  (1) After turning the ignition switch from ON to OFF, check that the roof glass can be operated via the sliding roof switch, however the operation will be impossible after the driver's or passenger's door is opened.
  (2) When approximately 45 seconds have passed after the ignition switch is turned from ON to OFF, check that the roof glass can not be operated via the sliding roof switch.
  (3) After turning the ignition switch from ON to OFF with the driver's or passenger's door open, check that the AUTO operation will stop immediately.

(f) Check the jam protection function.

NOTICE:

- **Never insert any part of your body, such as hand, in between.**
- **Pay thorough attention not to get caught in there.**
- **The roof might be deformed if something hard, such as a handle of hammer, is inserted in between.**

HINT:

The jam protection functions during the following AUTO operations; the AUTO close or down operation and the AUTO close or down operation after key–OFF.

  (1) Fully close the roof glass.
  (2) Set a handle of hammer around the fully close position.

HINT:

Wrap the handle well with cloth or something before setting.

(3) When operating the roof glass to the fully close position via the AUTO close or down, check that the glass movement will be reversed by detecting the handle, and keep moving by about 200 mm open or up and stop then.

HINT:

- The reverse movement when the glass is sliding will stop in 200 mm open or before the fully open position (in max. 20 seconds).
- The reverse movement when the glass is tilting down will stop in the fully up position or in 2 seconds.

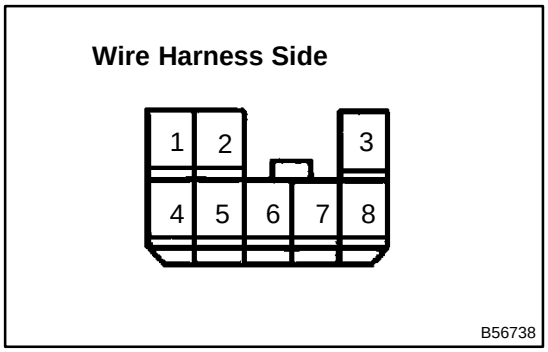

2. INSPECT SLIDING ROOF RELAY AND SWITCH (TMMK MADE)

(a) Inspect the sliding roof relay and switch operation.

(1) Disconnect the connector from the sliding roof relay and inspect the connector on the wire harness side.

Standard:

Terminal No.	Wiring color	Condition	Specified condition
5 ⇔ Body ground	W–B ⇔ Body ground	Constant	Continuity
7 ⇔ 5	L–W ⇔ W–B	Constant	10 – 14 V
3 ⇔ 5	R–L ⇔ W–B	Ignition switch OFF → ON	0 V → 10 – 14 V
1 ⇔ 5	R–W ⇔ W–B	Sliding roof switch → OPEN or DOWN	No continuity → Continuity
2 ⇔ 5	R–Y ⇔ W–B	Sliding roof switch → CLOSE or UP	No continuity → Continuity

HINT:

If the value is not as specified, there may be a malfunction in the wire harness side.

(2) Connect the connector, and inspect the voltage and continuity between each terminal of the connector and the body ground.

Standard:

Terminal No.	Wiring color	Condition	Specified condition
1 ⇔ 5	R–W ⇔ W–B	Ignition switch OFF → ON Sliding roof switch → OPEN or DOWN	10 – 14 V → 0 V
2 ⇔ 5	R–Y ⇔ W–B	Ignition switch OFF → ON Sliding roof switch → CLOSE or UP	10 – 14 V → 0 V

HINT:

If the value is not as specified, the sliding roof drive gear may be defective.

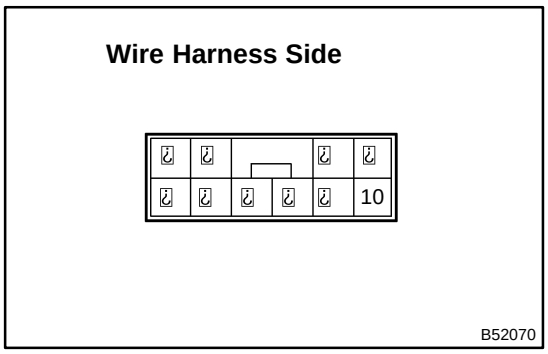

3. INSPECT SLIDING ROOF CONTROL ECU (TMC MADE)

(a) Inspect the sliding roof control ECU.

(1) Disconnect the connector from the ECU.

(2) Inspect the connector on the wire harness side.

Standard:

Symbols (Terminal No.)	Wiring color	Condition	Specified condition
E (7) ⇔ Body ground	W–B ⇔ Body ground	Constant	Continuity
B (5) ⇔ E (7)	L–W ⇔ W–B	Constant	10 – 14 V
IG (8) ⇔ E (7)	R–L ⇔ W–B	Ignition switch OFF → ON	0 V → 10 – 14 V
DWN (9) ⇔E (7)	R–W ⇔ W–B	Sliding roof switch → OPEN or DOWN	No continuity → Continuity
UP (10) ⇔ E (7)	R–Y ⇔ W–B	Sliding roof switch → CLOSE or UP	No continuity → Continuity

If the value is not as specified, there way be a malfunction in the wire harness side.

(3) Connect the connector, and inspect the voltage and continuity between each terminal of connector and body ground.

Standard:

Symbols (Terminal No.)	Wiring color	Condition	Specified condition
DWN(9) ⇔ E (7)	R–W ⇔ W–B	Ignition switch OFF → ON Sliding roof switch → OPEN/DOWN	10 – 14 V → 0 V
UP(10) ⇔ E (7)	R–Y ⇔ W–B	Ignition switch OFF → ON Sliding roof switch → CLOSE/UP	10 – 14 V → 0 V

If the value is not as specified, sliding roof drive gear or communication line way be defective.

74040–02

PROBLEM SYMPTOMS TABLE

Symptom	Suspected Area	See page
Sliding roof system does not operate	1. PWR NO.1 fuse	–
	2. Sliding roof motor switch	74–6
	3. Sliding roof drive gear	74–2
	4. Wire harness	74–2
	5. Faulty sliding of sliding roof	–
Sliding roof operation is abnormal	1. Sliding roof motor switch	74–6
	2. Sliding roof drive gear	74–2
	3. Wire harness	–
Sliding roof system stops operation half way (No foreign object is in the motor)	1. Sliding roof motor switch	74–6
	2. Sliding roof drive gear	74–2
	3. Wire harness	–
	4. sliding roof relay	74–7

74041–02

INSPECTION

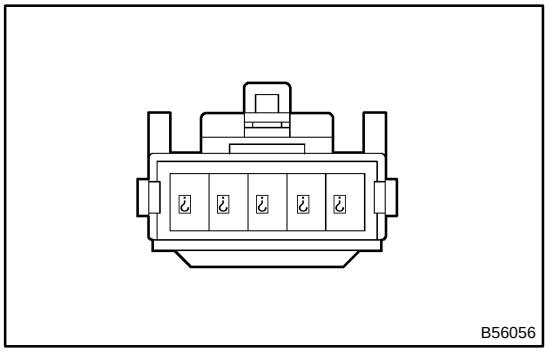

1. INSPECT SLIDE ROOF MOTOR SWITCH

(a) Check the slide roof motor switch continuity.

Standard:

Terminal No.	Switch position	Specified condition
2 ⇔ 4	CLOSE/UP	Continuity
2 ⇔ 3	OPEN/DOWN	Continuity

If continuity is not as specified, replace the switch.

7404C–02

RESET

1. RESET SLIDING ROOF POSITION

NOTICE:

When the battery negative (–) terminal is disconnected or PWR No.1 fuse is removed due to the repair, the sliding roof position memory is erased. After reconnecting the battery negative (–) terminal, make sure to reset the zero point.

If the reset is not performed, the sliding roof automatic operation will not function.

Vehicle	Condition	Procedure for reset
TMC made CAMRY	• When the Battery negative (–) terminal is disconnected. • When component parts of sliding roof are replaced. • When the ”PWR No,1” fuse is removed.	Reset A
	• When the sliding roof dose not stop at the fully closed position even if the auto close switch is operated.	Reset B
TMMK made CAMRY	• When the Battery negative (–) terminal is disconnected. • When the ”PWR No,1” fuse is removed.	Reset A
	• When component parts of sliding roof are replaced. • When the sliding roof dose not stop at the fully closed position even if the auto close switch is operated.	Reset C

(a) Reset A

(1) To reset the zero point for the sliding roof, push and hold the switch on the ”TILT UP” side until the sliding roof tilts all the way up and down a little automatically.

(2) Confirm ”one–touch side open and close” and ”one–touch tilt up and down” functions by pushing the switch briefly to the ”SLIDE–OPEN” and ”TILT–UP” sides.

(b) Reset B

(1) Push and hold the switch on the ”TILT UP/CLOSE” side until the sliding roof stops.

(2) Continue to push and hold the switch on the ”TILT UP/CLOSE” side for 10 seconds or more. The sliding roof will close to the fully closed position.

(3) Continue to push and hold the switch on the ”TILT UP/CLOSE” side until the sliding roof tilts all the way up and down a little automatically.

(4) Confirm ”one–touch side open and close” and ”one–touch tilt up and down” functions by pushing the switch briefly to the ”SLIDE–OPEN” and ”TILT–UP” sides.

(c) Reset C

(1) To reset the zero point for the sliding roof, push and hold the switch on the ”TILT UP” side until the sliding roof tilts all the way up and down a little automatically.

(2) Release the switch, and within 5 seconds re–push and hold the switch on the ”TILT UP/CLOSE” side.

(3) The sliding roof will automatically move to full slide open and then reverse to the close position.

(4) Release the switch.

(5) Confirm ”one–touch side open and close” and ”one–touch tilt up and down” functions by pushing the switch briefly to the ”SLIDE–OPEN” and ”TILT–UP” sides.

SLIDING ROOF (TMMK Made)

74042–02

COMPONENTS

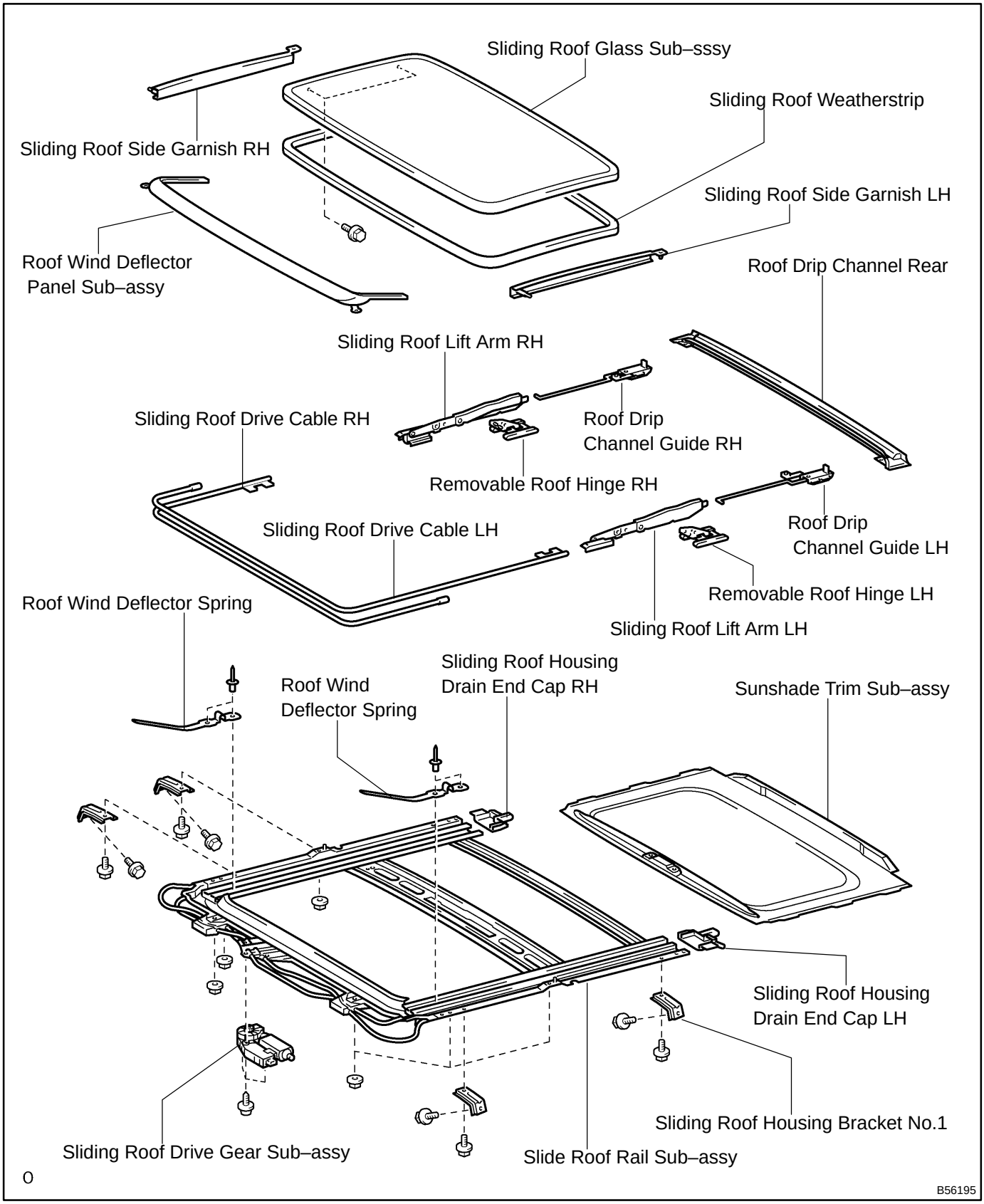

74043–04

REPLACEMENT

HINT:

Installation is in the reverse order of removal. But the installation is indicated only when it has a point.

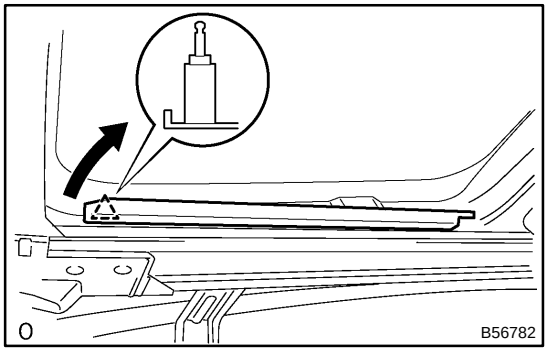

1. REMOVE SLIDING ROOF GLASS SUB–ASSY

(a) Disengage the claws and turn the sliding roof side garnish as shown in the illustration.

(b) Using a torx wrench (T25), remove the 4 screws and sliding roof glass.

2. REMOVE SLIDING ROOF WEATHERSTRIP

3. REMOVE SLIDING ROOF DRIVE GEAR SUB–ASSY

(a) Using a torx wrench (T25), remove the 3 screws and sliding roof drive gear.

4. REMOVE SLIDE ROOF RAIL SUB–ASSY

(a) Disconnect the 4 drain hoses from the housing.

(b) Remove the 6 nuts and 4 bolts, then remove the slide roof rail as shown in the illustration.

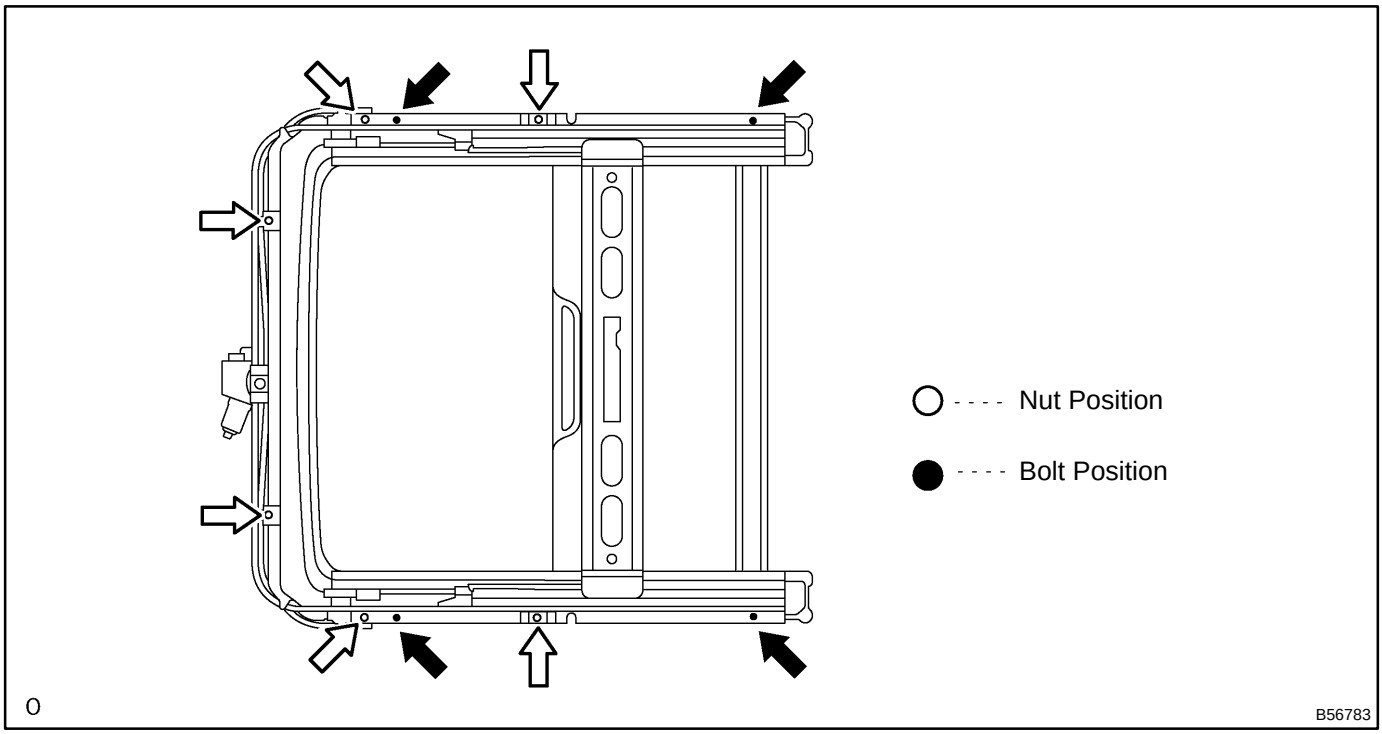

5. REMOVE SLIDING ROOF SIDE GARNISH RH

(a) Using a screwdriver, remove the sliding roof side garnish.

HINT:

Tape the screwdriver tip before use.

(b) Employ the same manner described above to the other side.

6. REMOVE SLIDING ROOF SIDE GARNISH LH

7. REMOVE ROOF DRIP CHANNEL REAR

(a) Remove the 2 screws and roof drip channel rear.

8. REMOVE SLIDING ROOF HOUSING DRAIN END CAP RH

(a) Using a screwdriver, remove the sliding roof housing drain end cap.

HINT:

Tape the screwdriver tip before use.

(b) Employ the same manner described above to the other side.

9. REMOVE SLIDING ROOF HOUSING DRAIN END CAP LH

10. REMOVE SUNSHADE TRIM SUB–ASSY

(a) Pull out the sunshade trim in the vehicle's rear direction.

11. REMOVE ROOF DRIP CHANNEL GUIDE RH

(a) Disengage the roof drip channel guide and sliding roof lift arm, and then pull out the roof drip channel guide in the vehicle's rear direction.

(b) Employ the same manner described above to the other side.

12. REMOVE ROOF DRIP CHANNEL GUIDE LH

13. REMOVE REMOVABLE ROOF HINGE RH

(a) Remove the stopper screw and removable roof hinge.

(b) Employ the same manner described above to the other side.

14. REMOVE REMOVABLE ROOF HINGE LH

15. REMOVE SLIDING ROOF DRIVE CABLE RH

16. REMOVE SLIDING ROOF DRIVE CABLE LH

17. REMOVE SLIDING ROOF LIFT ARM RH

(a) Pull out the sliding roof lift arm in the vehicle's rear direction.

(b) Employ the same manner described above to the other side.

18. REMOVE SLIDING ROOF LIFT ARM LH

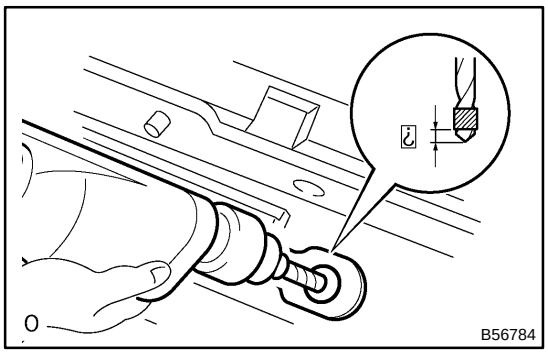

19. REMOVE ROOF WIND DEFLECTOR SPRING

(a) Remove the rivet.
(1) Use a drill of less than ϕ4 mm (0.16b in.).
(2) Gently and vertically place the drill tip onto the rivet, and cut the rivet flanges.
A: 5 mm (0.20 in.)

NOTICE:
- **Prizing the hole with a drill can lead to damage to the rivet hole or the drill itself.**
- **Be careful when undertaking this task as the cut rivet is hot.**

(3) Even if the flange is taken off, continue drilling and push–cut remaining fragment with the drill.

20. REMOVE ROOF WIND DEFLECTOR PANEL SUB–ASSY

21. REMOVE SLIDING ROOF HOUSING BRACKET NO.1

(a) Remove the 4 bolts and 4 sliding roof housing bracket.

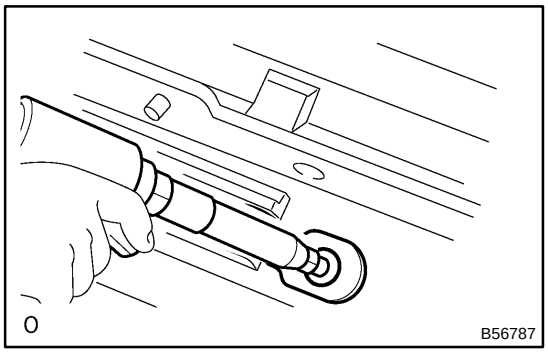

22. INSTALL ROOF WIND DEFLECTOR SPRING

(a) Using an air riveter or hand riveter with nose piece, strike rivets into the body panel.

NOTICE:
- **If the rivet is not positioned perpendicularly it will bend the mandrel.**
- **When the trigger is pulled, it may damage the SST.**

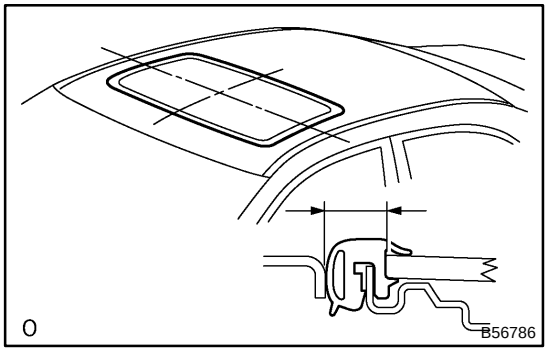

23. INSTALL SLIDING ROOF GLASS SUB–ASSY

(a) Check for a difference in level between the sliding roof (weatherstrip) and roof panel.
Corner of rear side:
0 ± 1.5 mm (0 ± 0.059 in.)

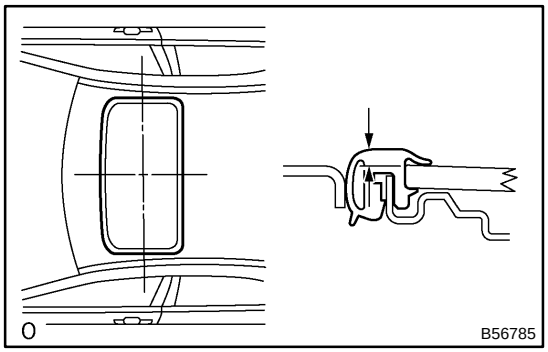

(b) Check for a difference in level between the sliding roof (glass) and roof panel.

NOTICE:
The clearance should be thoroughly even.

(c) Adjust the roof panel.
  (1) Using a torx driver T25, loosen a screw to adjust the sliding roof panel position. When the adjustment has done, tighten the screw there.

24. RESET THE SLIDING ROOF POSITION(See page74–7)

25. INSPECT FOR LEAK

(a) Adjusting the sliding roof, check there is no water leak.

(b) In case of water leak, readjust the sliding roof.

SLIDING ROOF (TMC Made)

COMPONENTS

74044–02

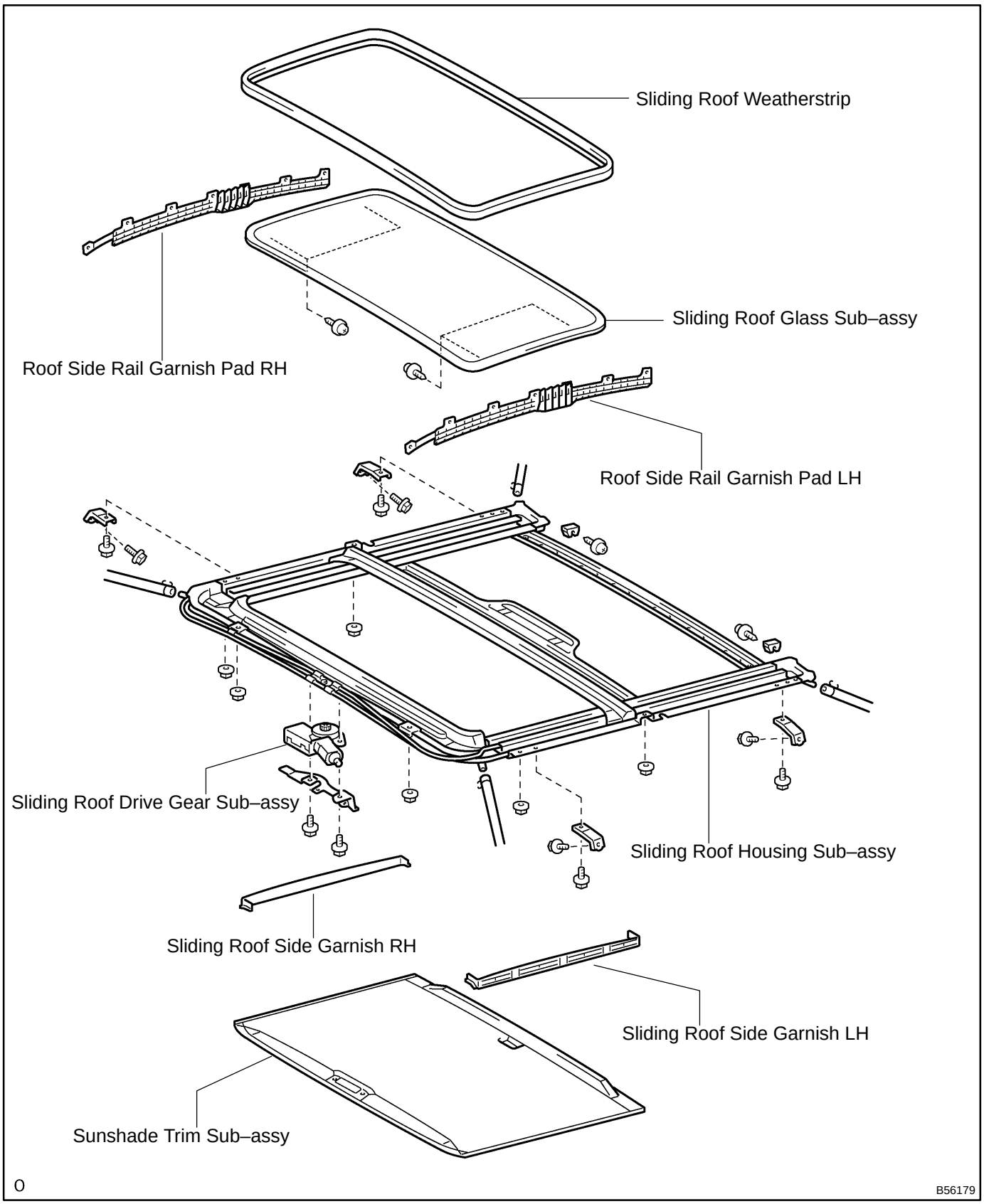

74045–03

REPLACEMENT

HINT:

Installation is in the reverse order of the removal. But the installation is indicated only when it has a point.

1. REMOVE ROOF HEADLINING ASSY
(See page76–20)

2. REMOVE ROOF SIDE RAIL GARNISH PAD RH(W/O CURTAIN SHIELD AIR BAG)

(a) Remove the 7 screws and roof side rail garnish pad.
(b) Employ the same manner described above to the other side.

3. REMOVE ROOF SIDE RAIL GARNISH PAD LH(W/O CURTAIN SHIELD AIR BAG)

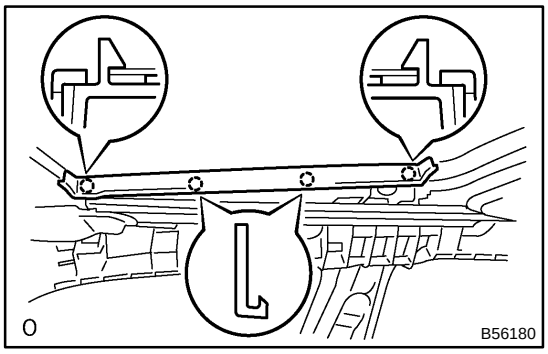

4. REMOVE SLIDING ROOF SIDE GARNISH RH

(a) Using a screwdriver, remove the sliding roof side garnish.

HINT:

Tape the screwdriver tip before use.

(b) Employ the same manner described above to the other side.

5. REMOVE SLIDING ROOF SIDE GARNISH LH

6. REMOVE SLIDING ROOF GLASS SUB–ASSY

(a) Using a torx wrench (T25), remove the 4 screws and sliding roof glass.

7. REMOVE SLIDING ROOF WEATHERSTRIP

8. REMOVE SLIDING ROOF DRIVE GEAR SUB–ASSY

(a) Remove the 2 bolts.
(b) Disconnect the clamp and then remove the sliding roof drive gear.

9. REMOVE SLIDING ROOF HOUSING SUB–ASSY

(a) Disconnect the 4 drain hoses from the housing.
(b) w/o curtain shield airbag:
Remove the 6 nuts and 4 bolts, then remove the housing as shown in the illustration.
(c) w/ curtain shield airbag:
Remove the 6 nuts and 8 bolts, then remove the housing as shown in the illustration.

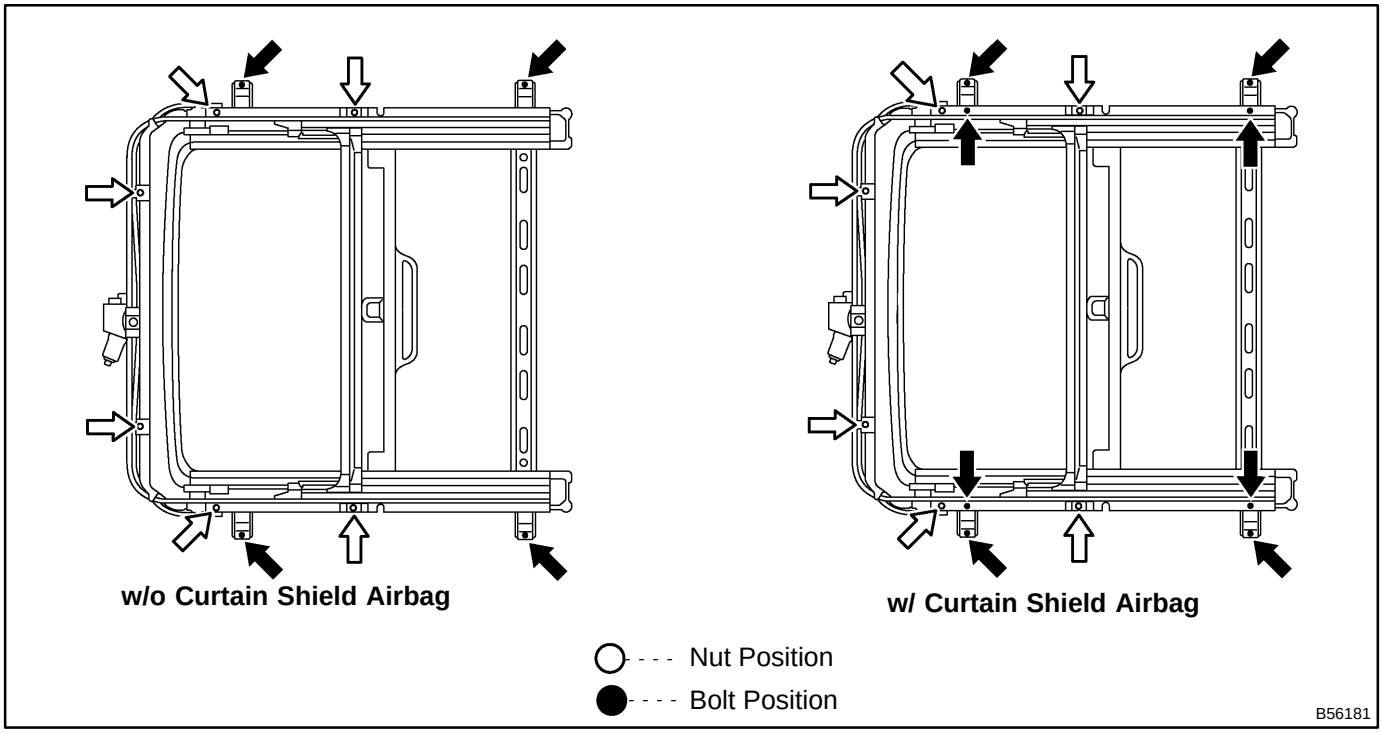

10. REMOVE SUNSHADE TRIM SUB–ASSY

(a) Remove the screw and stopper.
(b) Remove the sunshade trim.
(c) Employ the same manner described above to the other side.

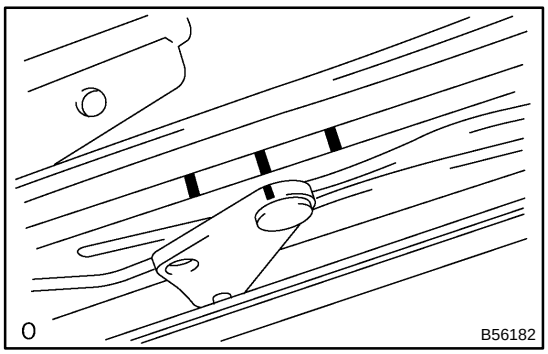

11. ADJUST THE FULLY CLOSED POSITION

(a) By using a screwdriver which tip is taped around, slide the drive cable of the sliding roof to align the matchmarks.

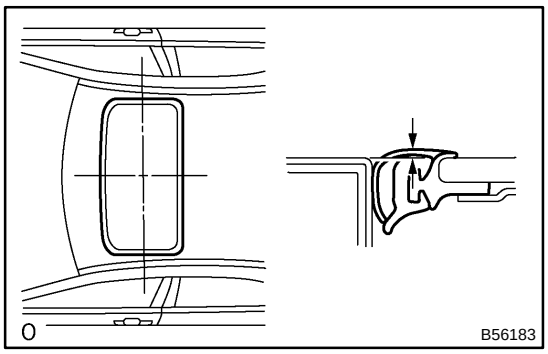

12. INSTALL SLIDING ROOF GLASS SUB–ASSY

(a) Check for a difference in level between the sliding roof (weatherstrip) and roof panel.
Corner of rear side:
0 ± 1.5 mm (0 ± 0.059 in.)

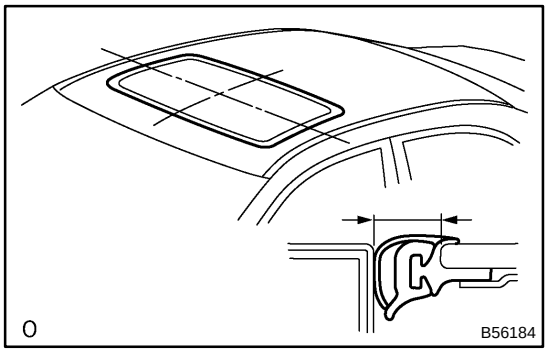

(b) Check for a difference in level between the sliding roof (glass) and roof panel.

NOTICE:
The clearance should be thoroughly even.

(c) Adjustment the roof panel.
(1) Using a torque driver T25, loosen a screw to adjust the sliding roof panel position. When the adjustment has done, tighten the screw there.

13. RESET THE SLIDING ROOF POSITION(See page74–7)

14. INSPECT FOR LEAK

(a) Adjusting the sliding roof, check there is no water leak.
(b) In case of water leak, readjust the sliding roof.

HOOD

ADJUSTMENT

75094–01

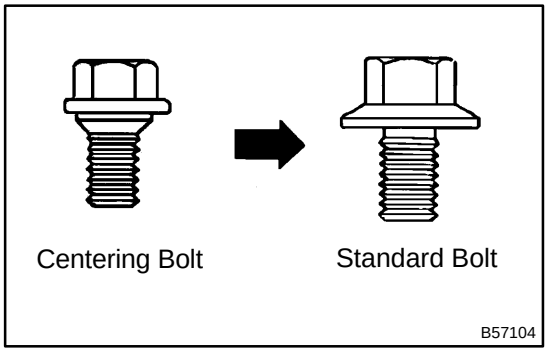

HINT:
Since the centering bolt is used as a hood hinge set bolt and hood lock set bolt, the hood and hood lock can not be adjusted with it on. Substitute a bolt with washer for the centering bolt.

1. INSPECT HOOD SUB–ASSY

(a) Check that the clearance is within the standard value.

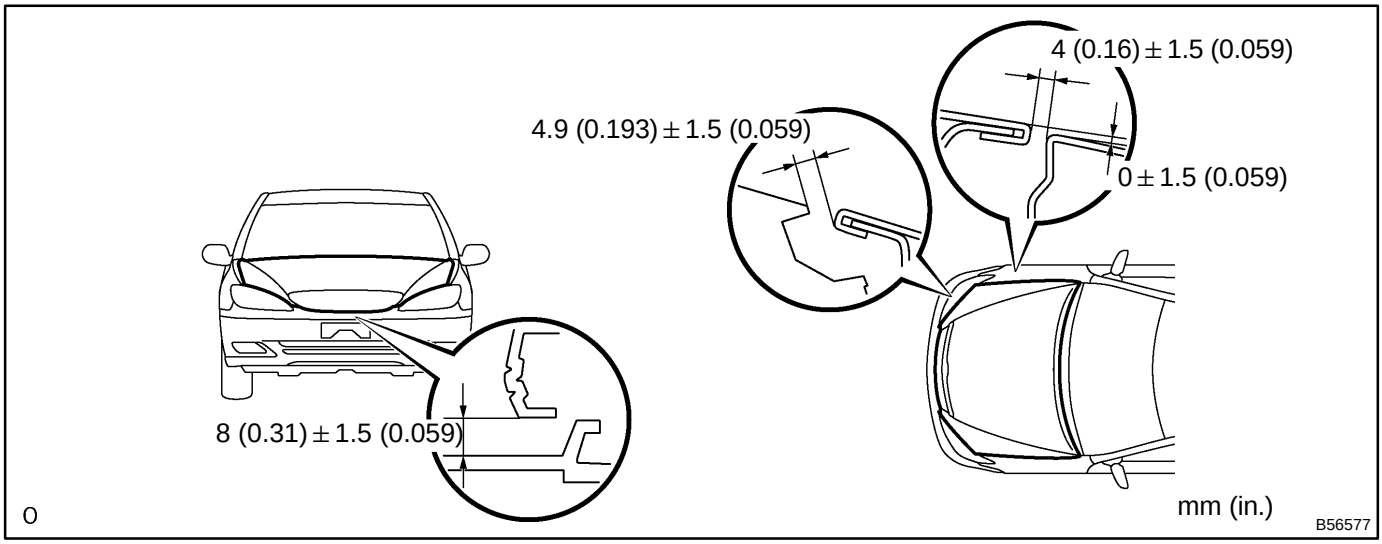

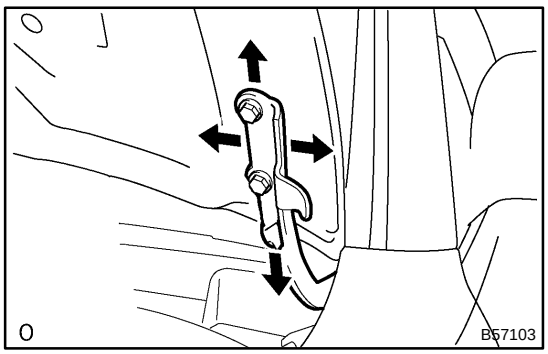

2. ADJUST HOOD SUB–ASSY

(a) Adjust the hood by loosening the hood side hinge bolts.
Torque: 26 N·m (265 kgf·cm, 19 ft·lbf)

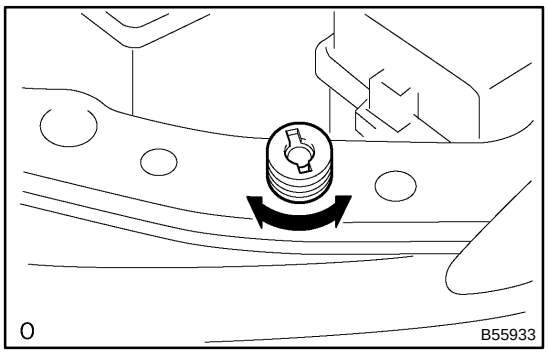

(b) Adjust the hood by turning the cushions.

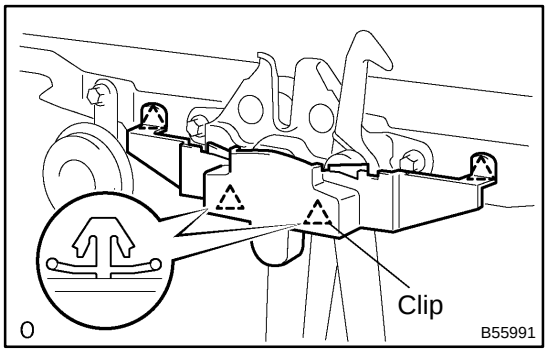

(c) Using a screwdriver, remove the hood lock release lever cover.

HINT:

Tape the screwdriver tip before use.

NOTICE:

Removing the protector damages the clips inside the protector, and therefore the use of a new protector is necessary on installation.

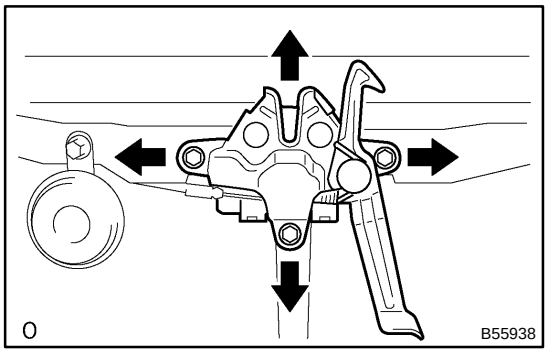

(d) Adjust the lock by loosening the bolts.

HOOD SUPPORT ROD

75095–01

REPLACEMENT

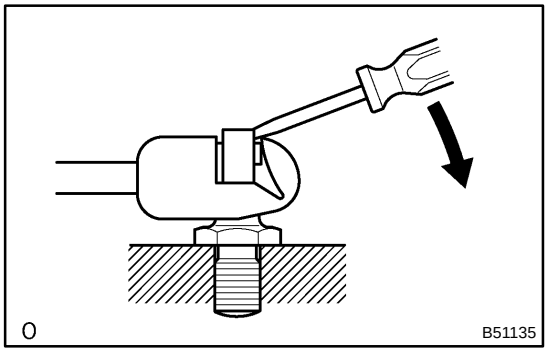

1. REMOVE HOOD SUPPORT ROD

(a) Using a screwdriver to hold the left spring, disengage the upper and lower parts of the support rod, and then remove the hood support rod.

NOTICE:

Removal should be done while the hood is being held up.

2. INSTALL HOOD SUPPORT ROD

NOTICE:

- **Install a metal socket onto the hood except a resinous one onto the body.**
- **After the installation, make sure that the socket is securely attached.**

75096–01

DISPOSAL

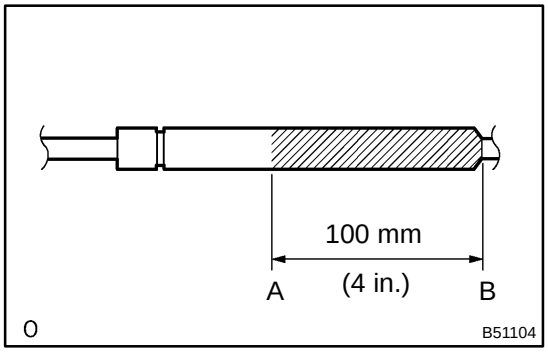

1. DISPOSE HOOD SUPPORT ROD

(a) Fix the hood stay assembly, with the piston–rod pulled out, on a vise.

(b) With protection glasses on, cut a part between A and B as shown in the illustration with a metal saw to release the gas.

NOTICE:

Although the gas inside the hood stay assembly is colorless, odorless and harmless, there is a possibility that cutting tips of the metal saw would jump around, therefore cover it with clothes or something.

FRONT DOOR

COMPONENTS

75098–01

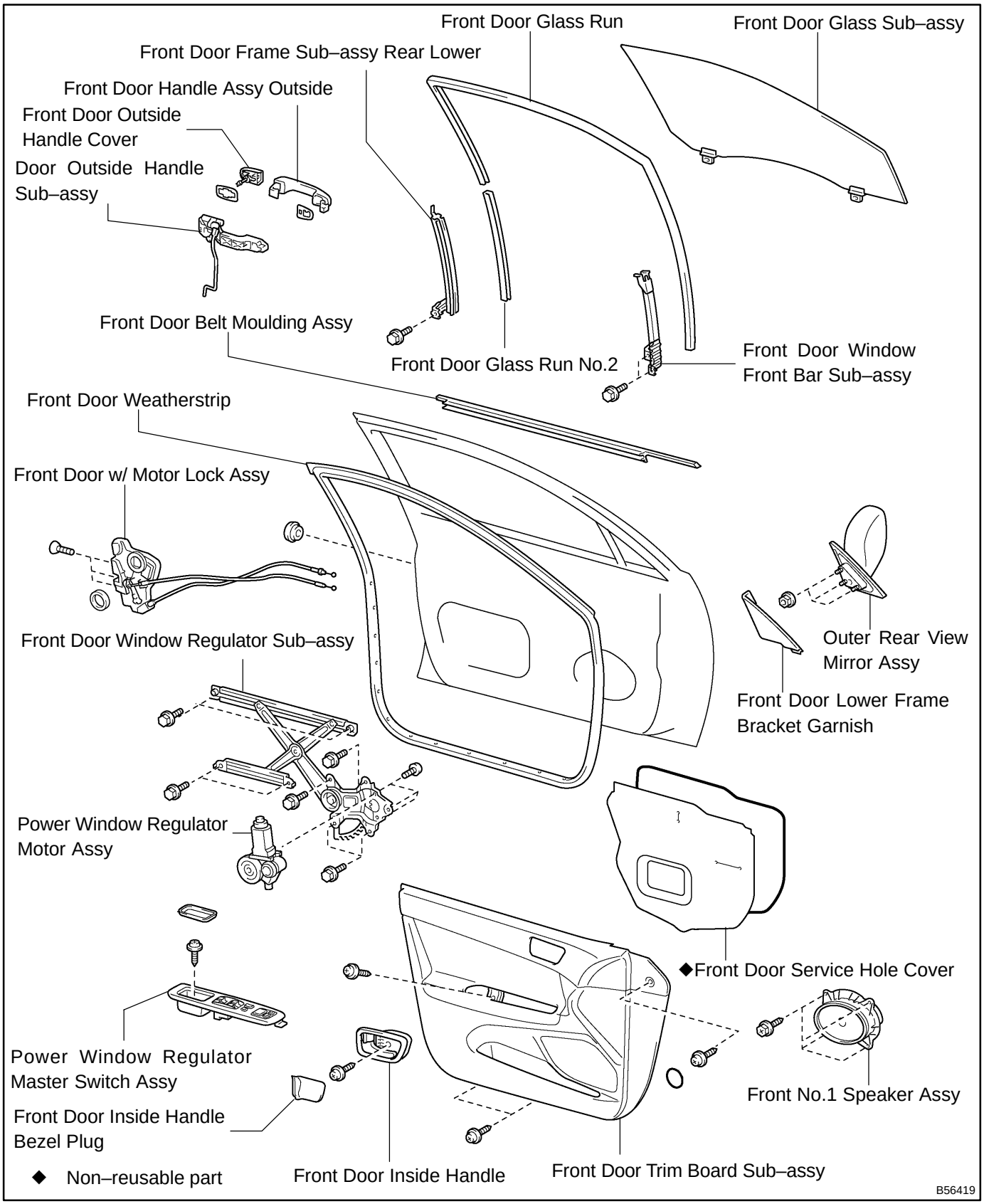

75097–01

ADJUSTMENT

HINT:

In the RH side, work in the same procedure as in the LH side.

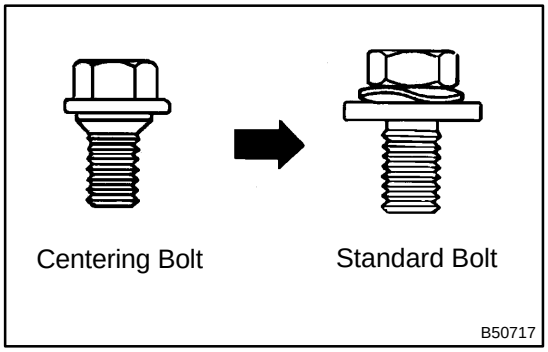

HINT:

Since the centering bolt is used as a door hinge set bolt, the door can not be adjusted with it on. Substitute a bolt with washer for the centering bolt.

1. INSPECT FRONT DOOR PANEL SUB–ASSY LH

(a) Check that the clearance is within the standard value.

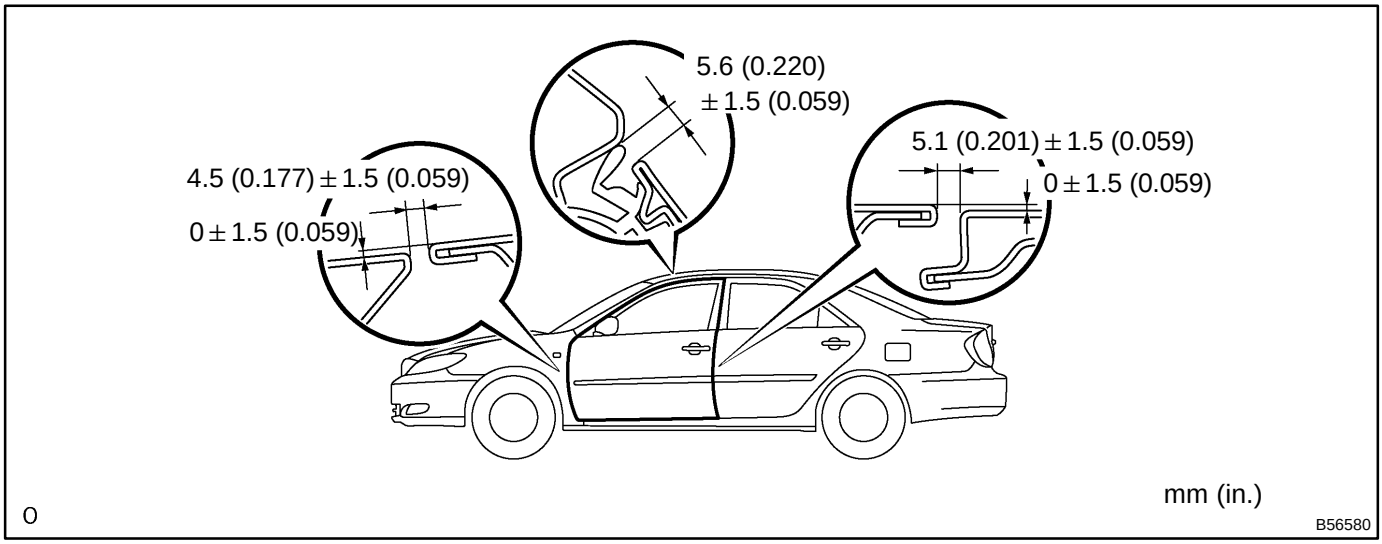

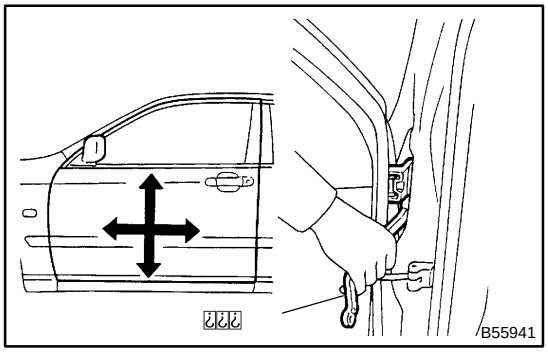

2. ADJUST FRONT DOOR PANEL SUB–ASSY LH

(a) Using SST, adjust the door by loosening the body side hinge bolts.

SST 09812–00010

Torque: 26 N·m (265 kgf·cm, 19 ft·lbf)

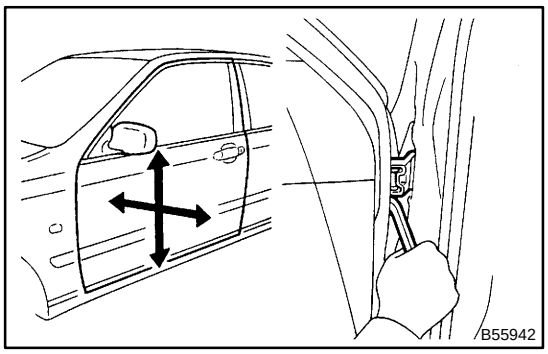

(b) Adjust the door by loosening the door side hinge bolts.
Torque: 26 N·m (265 kgf·cm, 19 ft·lbf)

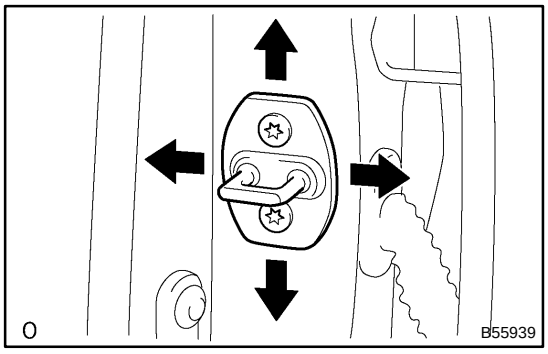

(c) Adjust the striker position by slightly loosening the striker mounting screws, and hitting the striker with a brass bar and hammer.

(d) Tighten the striker mounting screws again.
Torque: 23 N·m (235 kgf·cm, 17 ft·lbf)

75099–01

OVERHAUL

HINT:

- Installation is in the reverse order of the removal. But the installation is indicated only when it has a point.
- In the RH side, work in the same procedure as in the LH side.

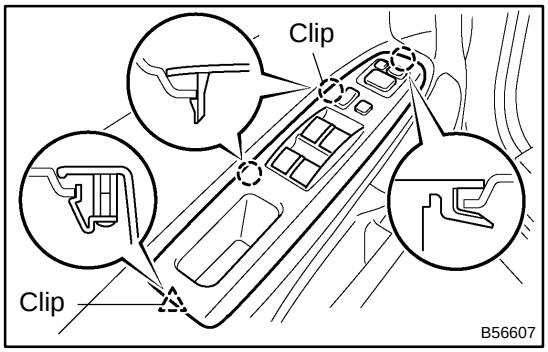

1. REMOVE POWER WINDOW REGULATOR MASTER SWITCH ASSY

(a) Remove the front door armrest base cover lower.
(b) Remove the screw.
(c) Using a screwdriver, remove the power window regulator master switch assembly then disconnect the connector.

HINT:
Tape the screwdriver tip before use.

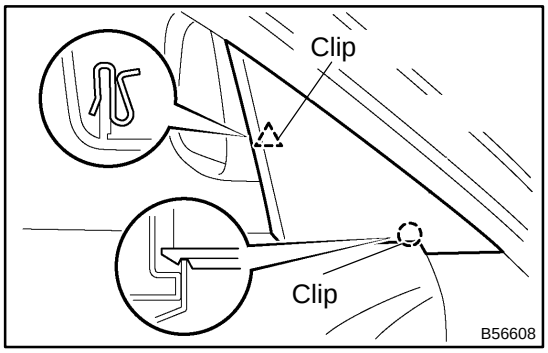

2. REMOVE FRONT DOOR LOWER FRAME BRACKET GARNISH LH

(a) Using a screwdriver, remove the front door lower frame bracket garnish.

HINT:
Tape the screwdriver tip before use.

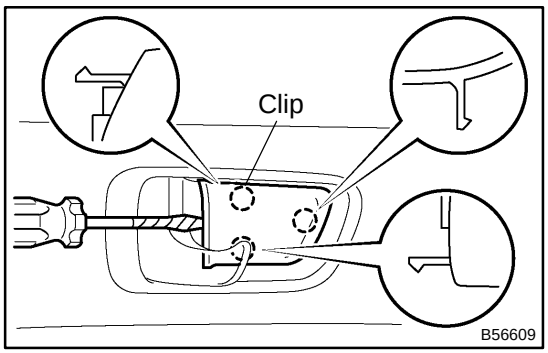

3. REMOVE FRONT DOOR INSIDE HANDLE BEZEL PLUG LH

(a) Using a screwdriver, remove the front door inside handle bezel plug.

HINT:
Tape the screwdriver tip before use.

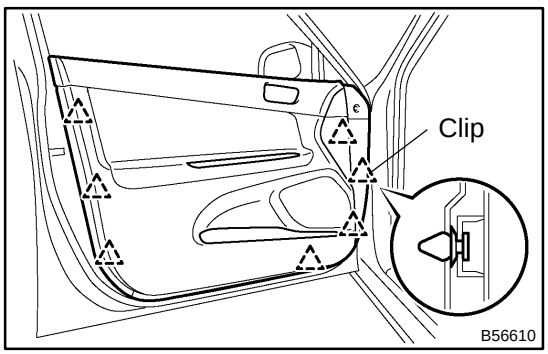

4. REMOVE FRONT DOOR TRIM BOARD SUB–ASSY LH

(a) Remove the hole plug.
(b) Remove the 5 screws.
(c) Remove the clip.
(d) Using a screwdriver, remove the front door trim board.

HINT:
Tape the screwdriver tip before use.

(e) Remove the inside handle then disconnect the 2 cables from the front door lock assembly.

5. REMOVE FRONT DOOR SERVICE HOLE COVER LH

(a) Disconnect each connector and remove the front door service hole cover.

NOTICE:

Remove the remaining tape on the body side.

6. REMOVE FRONT NO.1 SPEAKER ASSY

(a) Disconnect the connector.

(b) Remove the 4 bolts and the front No.1 speaker assembly.

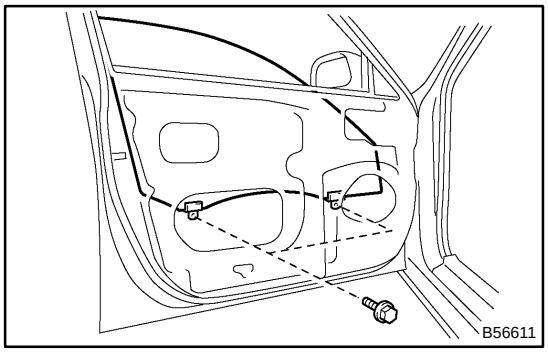

7. REMOVE FRONT DOOR GLASS SUB–ASSY LH

HINT:

Insert a shop rag inside the door panel to prevent scratching the glass.

(a) Open the door glass until the bolts appear in the service hole.

(b) Remove the 2 bolts and door glass.

NOTICE:

Do not damage the door glass.

HINT:

Pull the glass upward to remove it.

8. REMOVE FRONT DOOR WINDOW REGULATOR SUB–ASSY LH

(a) Disconnect the connector.

(b) Loosen the temporarily installed bolt.

NOTICE:

When the temporarily installed bolt is removed, the front door window regulator might drop and be deformed.

(c) Remove the 5 bolts and front door window regulator.

9. REMOVE POWER WINDOW REGULATOR MOTOR ASSY LH

(a) Using a torx wrench (T25), remove the 3 screws and the motor assembly.

10. REMOVE FRONT DOOR GLASS RUN LH

11. REMOVE FRONT DOOR GLASS RUN NO.2

12. REMOVE FRONT DOOR FRAME SUB–ASSY FRONT LOWER LH

(a) Remove the 2 screws and front door frame front lower.

13. REMOVE FRONT DOOR FRAME SUB–ASSY REAR LOWER LH

(a) Remove the screw and front door frame rear lower.

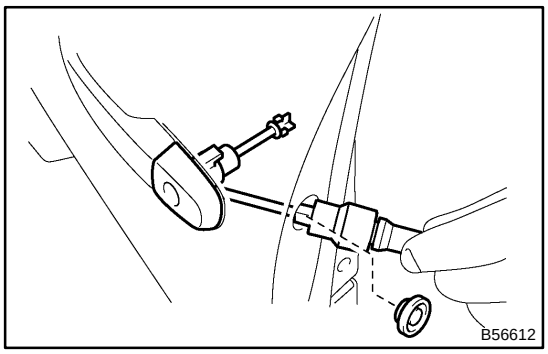

14. REMOVE FRONT DOOR OUTSIDE HANDLE COVER LH

(a) Remove the hole plug

(b) Using a torx wrench (T30), loosen the screw and remove the front door outside handle cover with the door lock key cylinder installed.

15. REMOVE FRONT DOOR W/MOTOR LOCK ASSY LH

(a) Disconnect the connector.

(b) Using a torx wrench (T30), remove the 3 screws and the front door w/ motor lock assembly.

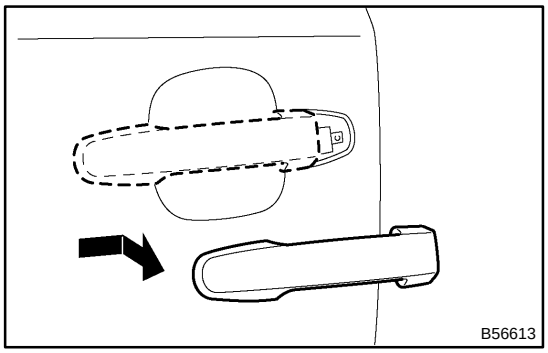

16. REMOVE FRONT DOOR HANDLE ASSY OUTSIDE LH

(a) Pushing the outside handle in the arrow mark direction in the illustration, remove the front door outside handle.

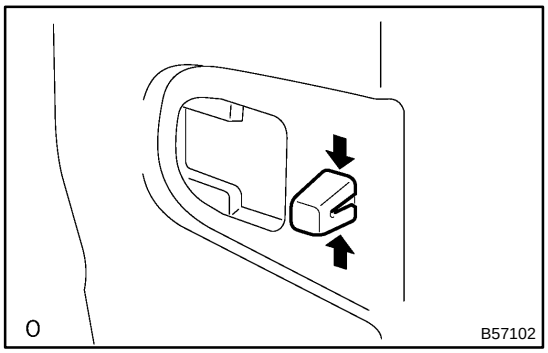

17. REMOVE DOOR OUTSIDE HANDLE SUB–ASSY LH

(a) Using a torx wrench (T30), loosen the screw.

(b) Using pliers, disengage the clips and remove the front door outside handle, as shown in the illustration.

NOTICE:

Be sure to remove the outside handle together with the clips, because the clips will be damaged if the clips remain attached to the door panel.

18. REMOVE FRONT DOOR WEATHERSTRIP LH

(a) Using a screwdriver, remove the door weatherstrip.

HINT:

Tape the screwdriver tip before use.

19. REMOVE OUTER REAR VIEW MIRROR ASSY LH

(a) Remove the 3 nuts.

(b) Disconnect the connector then remove the outer rear view mirror assembly.

20. REMOVE FRONT DOOR BELT MOULDING ASSY LH(See page 76–9)

21. INSTALL DOOR OUTSIDE HANDLE SUB–ASSY LH

(a) Using a torx wrench (T30), install the front door outside handle sub–assy.

22. INSTALL FRONT DOOR W/MOTOR LOCK ASSY LH

(a) Install a new door lock wire harness packing.

NOTICE:

- **If reusing the removed lock with rear door motor, the packing in the connecting part should be replaced with a new one.**
- **Be careful that grease and dirt will not stick to the packing surface in the connecting part.**
- **Reusing the removed packing or using a damaged packing will cause water to penetrate through the connecting part, and it will result in a malfunction of the door lock.**

(b) Insert the outside handle link into the lock assembly with front door motor, and then set it to the door panel.

NOTICE:

Make sure that the outside handle link is securely engaged with the lock assembly.

(c) Using a torx wrench (T30), install the front door lock assembly with the 3 screws.

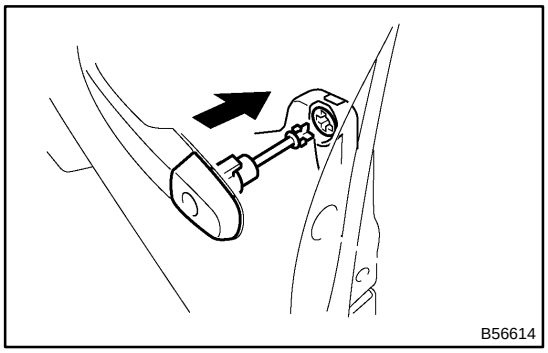

23. INSTALL FRONT DOOR OUTSIDE HANDLE COVER LH

(a) Using a torx wrench (T30), install the front door outside handle cover with the screw.

24. INSTALL POWER WINDOW REGULATOR MOTOR ASSY LH (W/ JAM PROTECTION)

(a) Apply MP grease to the sliding and rotating parts of the regulator assembly.

(b) If the jam protection dose not function properly, perform the following procedure.

HINT:

It is necessary to reset the power window motor (in the initial position for the limit switch) when separating the window regulator from the power window motor or operating the window regulator with the door glass not installed.

(1) Remove the power window motor.

HINT:

Place the matchmarks on the power window motor and window regulator gear.

(2) Connect the power window motor and power window switch to the wire harness of the vehicle.

(3) Turn the ignition switch ON and operate the power window switch to idle the power window motor in the up side direction for more than 6 rotations or less than 10 rotations (4 seconds or more).

(4) Assemble the power window motor and regulator.

HINT:

- Install the motor when the regulator arm is below the middle point.
- Align the matchmarks on the power window motor and window regulator gear when installing the power window motor.

(5) Assemble the power window regulator and door glass.

HINT:

Never rotate the motor to the down direction until the installation of the window glass is completed.

25. INSTALL FRONT DOOR WINDOW REGULATOR SUB–ASSY LH

(a) Install the temporarily installed bolt securely.

(b) Install the temporarily installed bolt to the window regulator to the front door panel, and install the front door window regulator temporarily.

(c) Tighten the 5 bolts and the temporarily installed bolt.

(d) Disconnect the connector.

26. INSTALL FRONT DOOR GLASS SUB–ASSY LH

(a) Install the front door glass with the 2 bolts.

HINT:

When the installation point of the front door glass does not match, adjust the regulator position by manual operation.

(1) Connect the power window switch to the wire harness and turn the ignition switch ON.

(2) Repeat UP and DOWN operation several times manually.

(3) Check if AUTO UP →AUTO DOWN operates in the automatic operation.

HINT:

- Note that the jam protection function does not operate just after resetting.
- Reset the regulator again when performing the reverse operating after closing the window fully by AUTO UP operation.

27. INSPECT POWER WINDOW FUNCTION(See page 70–1)

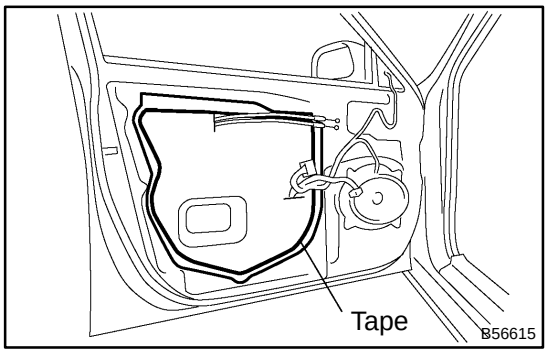

28. INSTALL FRONT DOOR SERVICE HOLE COVER LH

(a) Install a new service hole cover to the door panel.

HINT:

- When installing the service hole cover, pull out the links and connectors through the service hole cover.
- There should be no wrinkles or folds on the service hole cover after attaching it.
- After attaching the service hole cover, sealing condition should be confirmed.

REAR DOOR

COMPONENTS

7509A–01

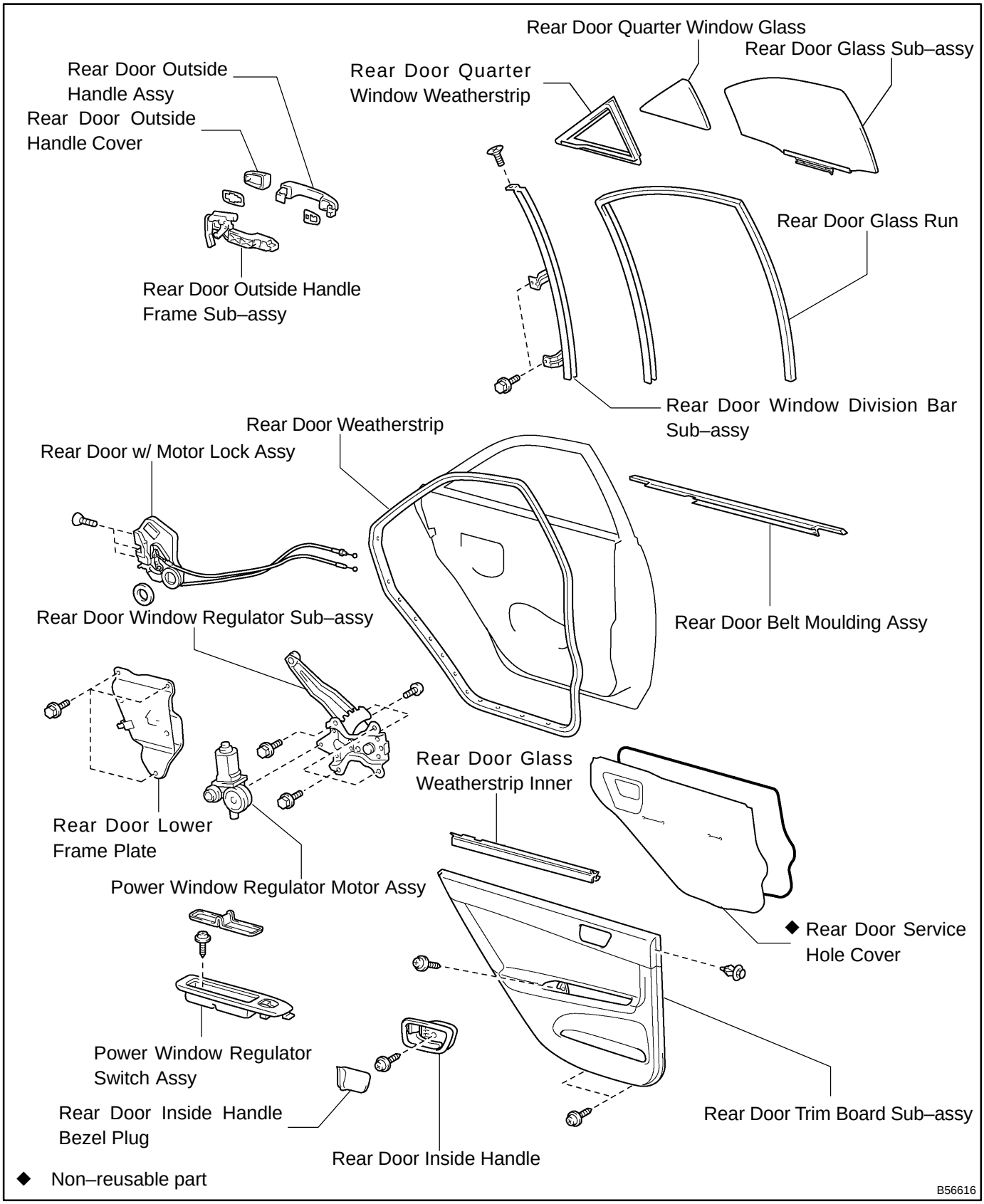

7509B–01

ADJUSTMENT

HINT:

- Installation is in the reverse order of the removal. But the installation is indicated only when it has a point.
- In the RH side, work in the same procedure as in the LH side.

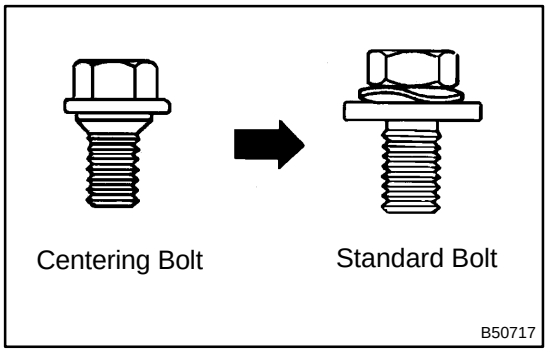

HINT:
Since the centering bolt is used as a door hinge set bolt, the door can not be adjusted with it on. Substitute a bolt with washer for the centering bolt.

1. INSPECT REAR DOOR PANEL SUB–ASSY LH

(a) Check that the clearance is within the standard value.

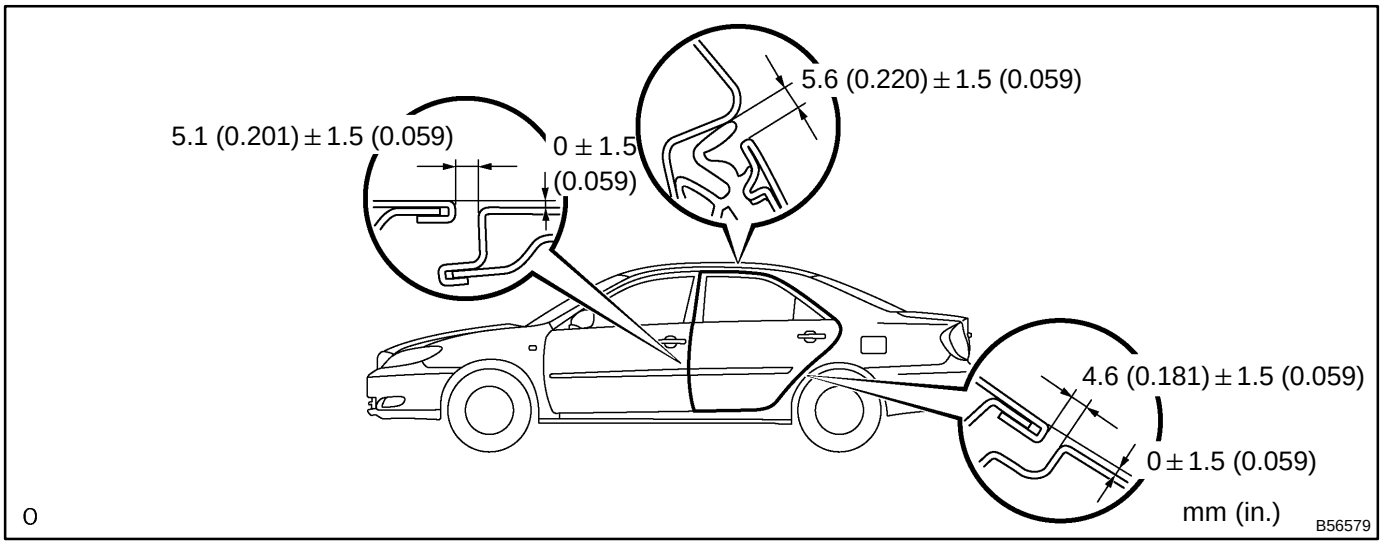

2. REMOVE FRONT DOOR SCUFF PLATE LH(See page 76–20)
3. REMOVE REAR DOOR SCUFF PLATE LH(See page 76–20)
4. REMOVE FRONT DOOR OPENING TRIM WEATHERSTRIP LH(See page 76–20)
5. REMOVE REAR DOOR OPENING TRIM WEATHERSTRIP LH(See page 76–20)
6. REMOVE CENTER PILLAR GARNISH LOWER LH(See page 76–20)

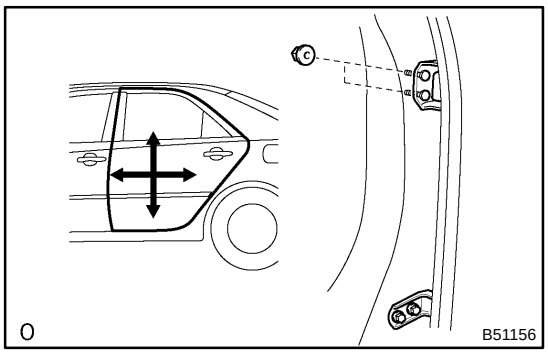

7. ADJUST REAR DOOR PANEL SUB–ASSY LH

(a) Adjust the door by loosening the body side hinge nuts.
Torque: 26 N·m (265 kgf·cm, 19 ft·lbf)

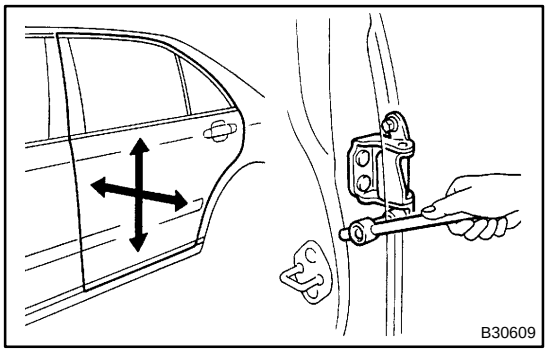

(b) Adjust the door by loosening the door side hinge bolts.
Torque: 26 N·m (265 kgf·cm, 19 ft·lbf)

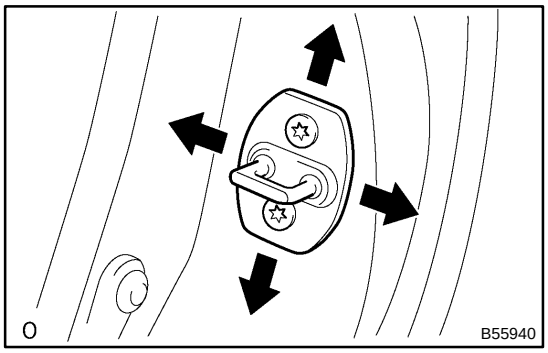

(c) Adjust the striker position by slightly loosening the striker mounting screws, and hitting the striker with a brass bar and hammer.

(d) Tighten the striker mounting screws again.
Torque: 23 N·m (235 kgf·cm, 17 ft·lbf)

7509C–01

OVERHAUL

HINT:

- Installation is in the reverse order of the removal. But the installation is indicated only when it has a point.
- In the LH side, work in the same procedure as in the RH side.

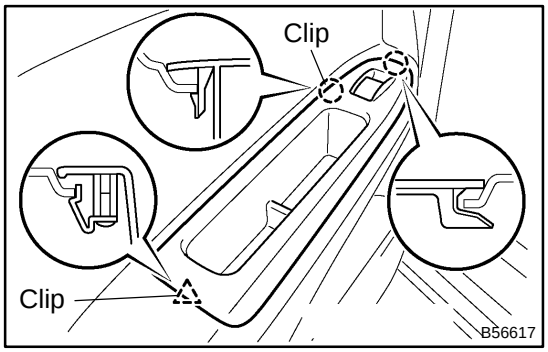

1. REMOVE POWER WINDOW REGULATOR SWITCH ASSY REAR

(a) Remove the rear door armrest base cover lower.
(b) Remove the screw.
(c) Using a screwdriver, remove the power window regulator switch assembly rear then disconnect the connector.

HINT:
Tape the screwdriver tip before use.

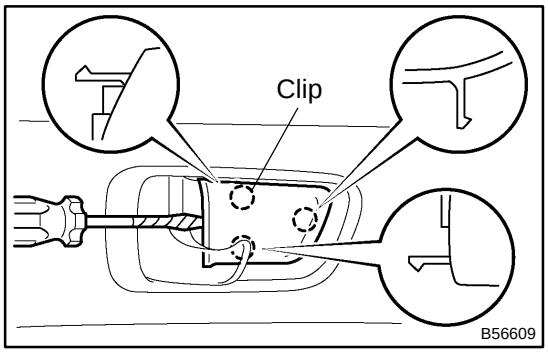

2. REMOVE REAR DOOR INSIDE HANDLE BEZEL PLUG LH

(a) Using a screwdriver, remove the rear door inside handle bezel plug.

HINT:
Tape the screwdriver tip before use.

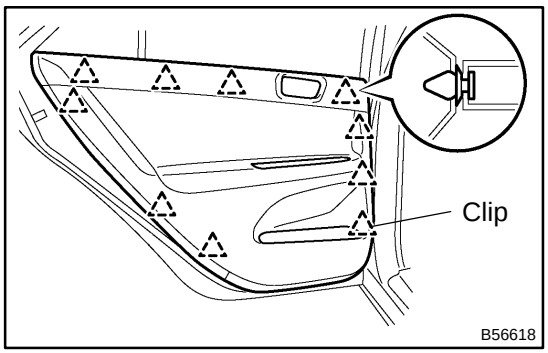

3. REMOVE REAR DOOR TRIM BOARD SUB–ASSY LH

(a) Remove the 4 screws.
(b) Using a screwdriver, remove the clip.
(c) Using a screwdriver, remove the rear door trim board.

HINT:
Tape the screwdriver tip before use.

(d) Remove the inside handle then disconnect the 2 cables from the rear door lock assembly.

4. REMOVE REAR DOOR LOWER FRAME PLATE SUB–ASSY LH

(a) Remove the 3 screws and rear door lower frame plate.

5. REMOVE REAR DOOR SERVICE HOLE COVER LH

(a) Disconnect each connector and remove the rear door service hole cover.

NOTICE:

Remove the remaining tape on the body side.

6. REMOVE REAR DOOR GLASS WEATHERSTRIP INNER LH

7. REMOVE REAR DOOR GLASS RUN LH

8. REMOVE REAR DOOR WEATHERSTRIP LH

(a) Using a screwdriver, remove the door weatherstrip.

HINT:

Tape the screwdriver tip before use.

9. REMOVE REAR DOOR BELT MOULDING ASSY LH(See page 76–10)

10. REMOVE REAR DOOR WINDOW FRAME SUB–ASSY REAR LOWER LH

(a) Remove the screws.

(b) Remove the 2 bolts and rear door window frame rear lower.

11. REMOVE REAR DOOR QUARTER WINDOW GLASS LH

(a) Remove the rear door quarter window glass.

12. REMOVE REAR DOOR GLASS SUB–ASSY LH

HINT:

Insert a shop rag inside the door panel to prevent scratching the glass.

(a) Open the door glass.

(b) Tilt the door glass and disconnect the roller of the regulator from the channel to remove the door glass.

NOTICE:

Do not damage the door glass.

HINT:

Pull the glass upward to remove it.

13. REMOVE REAR DOOR WINDOW REGULATOR SUB–ASSY LH

(a) Disconnect the connector.

(b) Loosen the temporarily installed bolt.

NOTICE:

When the temporarily installed bolt is removed, the rear door window regulator might drop and be deformed.

(c) Remove the 3 bolts and rear door window regulator.

14. REMOVE POWER WINDOW REGULATOR MOTOR ASSY LH

(a) Using a torx wrench (T25), remove the 3 screws and the motor assembly.

15. REMOVE REAR DOOR W/MOTOR LOCK ASSY LH

(a) Disconnect the connector.

(b) Using a torx wrench (T30), remove the 3 screws and the rear door with motor lock assembly.

16. REMOVE REAR DOOR OUTSIDE HANDLE COVER RH

(a) Using a torx wrench (T30), loosen the screw and remove the rear door outside handle cover.

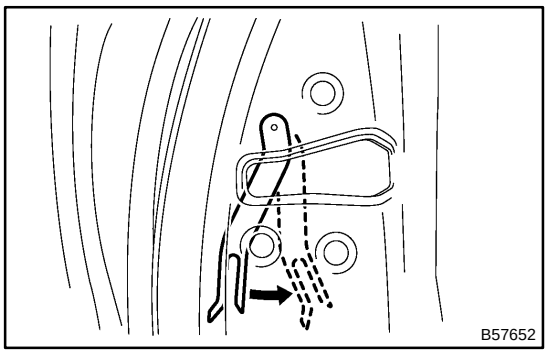

17. REMOVE REAR DOOR OUTSIDE HANDLE ASSY LH

(a) Pull and hold the release plate of the outside handle frame, as shown in the illustration.

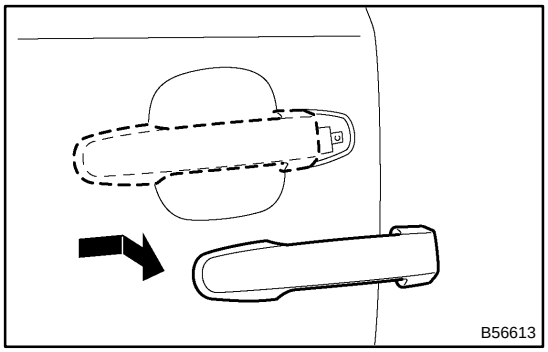

(b) Pushing the outside handle in the arrow mark direction in the illustration, remove the rear door outside handle.

NOTICE:

If the release plate is not pulled and held when removing the outside handle assembly, then the release pate will interfere with the outside handle and it will damage the release plate.

18. REMOVE REAR DOOR OUTSIDE HANDLE FRAME SUB–ASSY LH

(a) Using a torx wrench (T30), loosen the screw and remove the rear door outside handle frame.

19. INSTALL REAR DOOR OUTSIDE HANDLE FRAME SUB–ASSY LH

(a) Using a torx wrench (T30), install the rear door outside handle frame with the screw.

20. INSTALL REAR DOOR OUTSIDE HANDLE COVER RH

(a) Using a torx wrench (T30), install the rear door outside handle cover with the screw.

21. INSTALL REAR DOOR W/MOTOR LOCK ASSY LH

(a) Install a new door lock wire harness packing.

NOTICE:

- **If reusing the removed lock with rear door motor, the packing in the connecting part should be replaced with a new one.**
- **Be careful that grease and dirt will not stick to the packing surface in the connecting part.**
- **Reusing the removed packing or using a damaged packing will cause water to penetrate through the connecting part, and it will result in a malfunction of the door lock.**

(b) Engage the lock assembly with rear door motor with the release plate of the outside handle, and then set it to the door panel.

NOTICE:

Make sure that the release plate of the outside handle frame is securely engaged with the lock assembly.

(c) Using a torx wrench (T30), install the rear door lock assembly with the 3 screws and bolt.

22. INSTALL POWER WINDOW REGULATOR MOTOR ASSY LH

(a) Using a torx wrench (T25), install the power window regulator motor with the 3 screws.

23. INSTALL REAR DOOR WINDOW REGULATOR SUB–ASSY LH

(a) Install the temporarily installed bolt securely.

(b) Install the temporarily installed bolt to the window regulator to the rear door panel, and install the rear door window regulator temporarily.

(c) Tighten the 3 bolts and the temporarily installed bolt.

(d) Disconnect the connector.

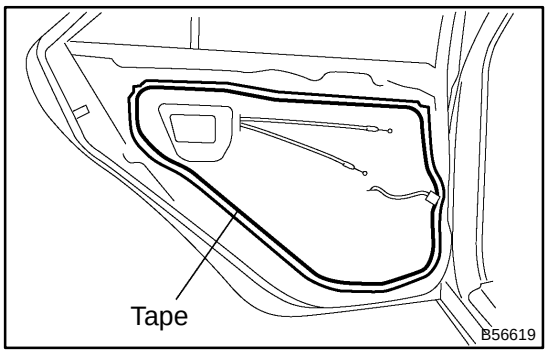

24. INSTALL REAR DOOR SERVICE HOLE COVER LH

(a) Install a new service hole cover to the door panel.

HINT:

- When installing the service hole cover, pull out the links and connectors through the service hole cover.
- There should be no wrinkles or folds on the service hole cover after attaching it.
- After attaching the service hole cover, sealing condition should be confirmed.

LUGGAGE COMPARTMENT DOOR

ADJUSTMENT

7509D–01

1. INSPECT LUGGAGE COMPARTMENT DOOR PANEL SUB–ASSY

(a) Check that the clearance is within the standard value.

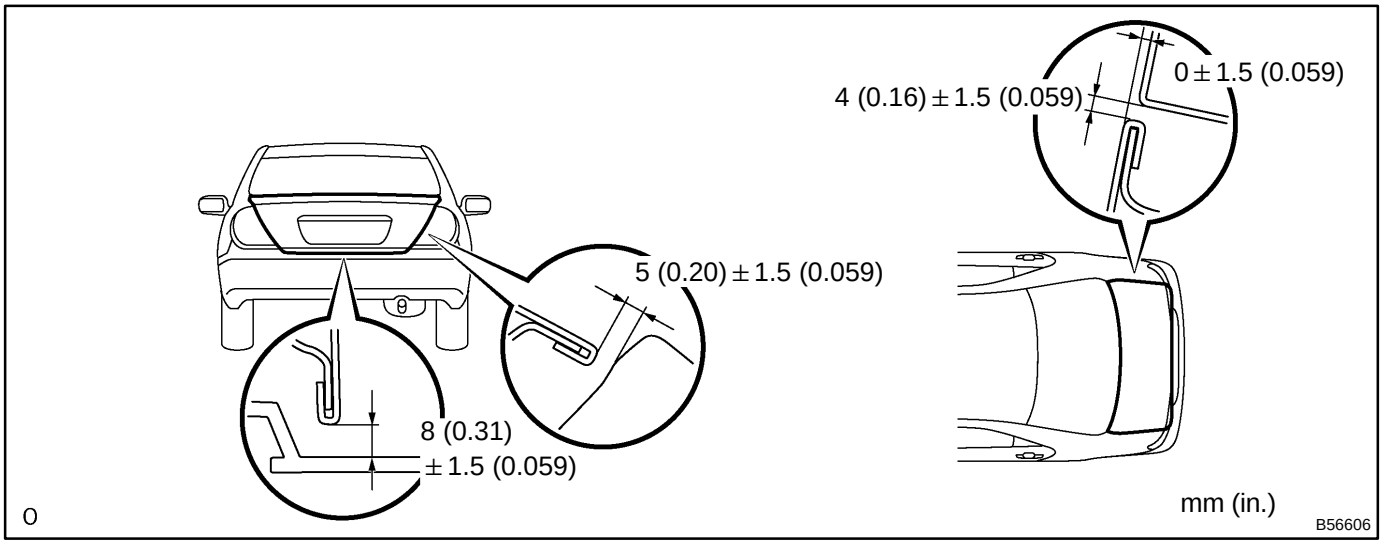

2. REMOVE LUGGAGE COMPARTMENT DOOR COVER(See page 76–6)

3. REMOVE LUGGAGE COMPARTMENT FLOOR MAT(See page 76–5)

4. REMOVE SPARE WHEEL COVER ASSY(See page 76–5)

5. REMOVE LUGGAGE COMPARTMENT SIDE COVER SUB–ASSY RH(See page 76–5)

6. REMOVE LUGGAGE COMPARTMENT TRIM HOOK NO.1(See page 76–5)

7. REMOVE REAR FLOOR FINISH PLATE(See page 76–5)

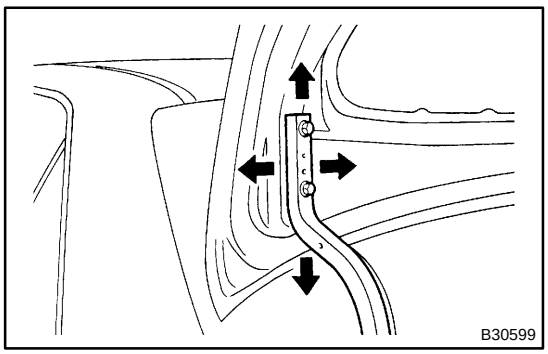

8. ADJUST LUGGAGE COMPARTMENT DOOR PANEL SUB–ASSY

(a) For forward/rearward and right/left adjustments, loosen the bolts.

(b) For a vertical adjustment of the door front end, increase or decrease the number of the washers between the hinge and door.

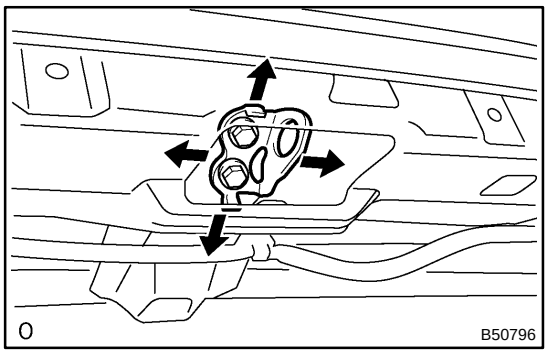

(c) Using a hammer and a brass bar, tap the striker to adjust it.

LUGGAGE DOOR HINGE TORSION BAR

7509E–01

REPLACEMENT

NOTICE:

Hold the door when opening / closing it in order to prevent the door from closing without any resistance after removing the torsion bar.

1. REMOVE LUGGAGE COMPARTMENT FLOOR MAT

2. REMOVE SPARE WHEEL COVER ASSY

3. REMOVE REAR FLOOR FINISH PLATE(See page 76–4)

4. REMOVE LUGGAGE COMPARTMENT TRIM COVER INNER RH(See page 76–4)

5. REMOVE LUGGAGE COMPARTMENT TRIM COVER INNER LH(See page 76–4)

6. REMOVE LUGGAGE DOOR HINGE TORSION BAR LH

(a) Remove the torsion bar RH from the clip placed in the center of the upper back panel.

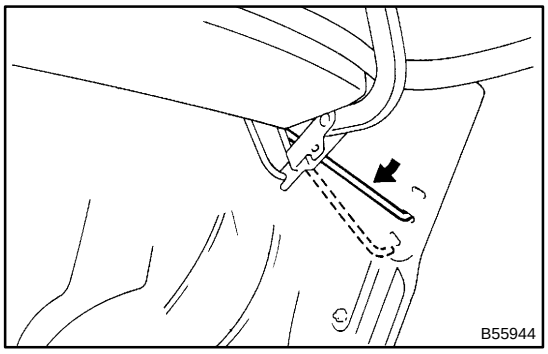

(b) Remove the tip of the torsion bar by hand from the roof side inner panel.

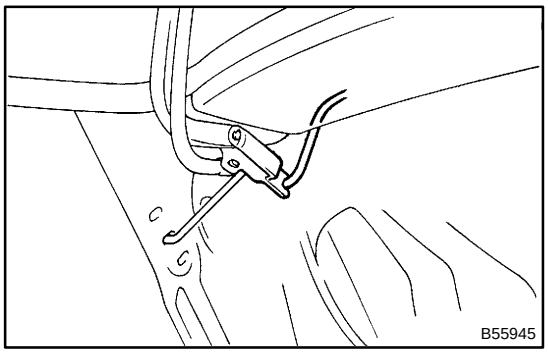

(c) Take out the hinge arm from the torsion bar in the rear direction.

(d) Pull the torsion bar to your side in order to remove the ”U”–shaped part from the hinge support.

7. REMOVE LUGGAGE DOOR HINGE TORSION BAR RH

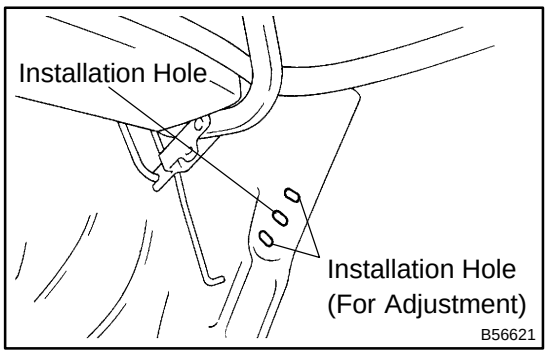

8. INSTALL LUGGAGE DOOR HINGE TORSION BAR LH

(a) Check the paint mark of the torsion bar. (When installing a new one)

HINT:

- Green paint for a vehicle without rear spoiler
- Yellow paint for a vehicle with rear spoiler

(b) Set the tip of the torsion bar in the installation hole placed in the center part. Holes placed in the upper and lower parts are used for adjustment.

HINT:

If the return force becomes less because the torsion bar has been damaged, adjustment should be done in the upper hole.

- If the return force is little, adjust one of the torsion bars.
- If the return force is still little, adjust both of the torsion bars.

9. INSTALL LUGGAGE DOOR HINGE TORSION BAR RH

(a) Check the paint mark of the torsion bar. (When installing a new one)

HINT:

- White paint for a vehicle without rear spoiler
- Red paint for a vehicle with rear spoiler

FRONT BUMPER

COMPONENTS

760C9–02

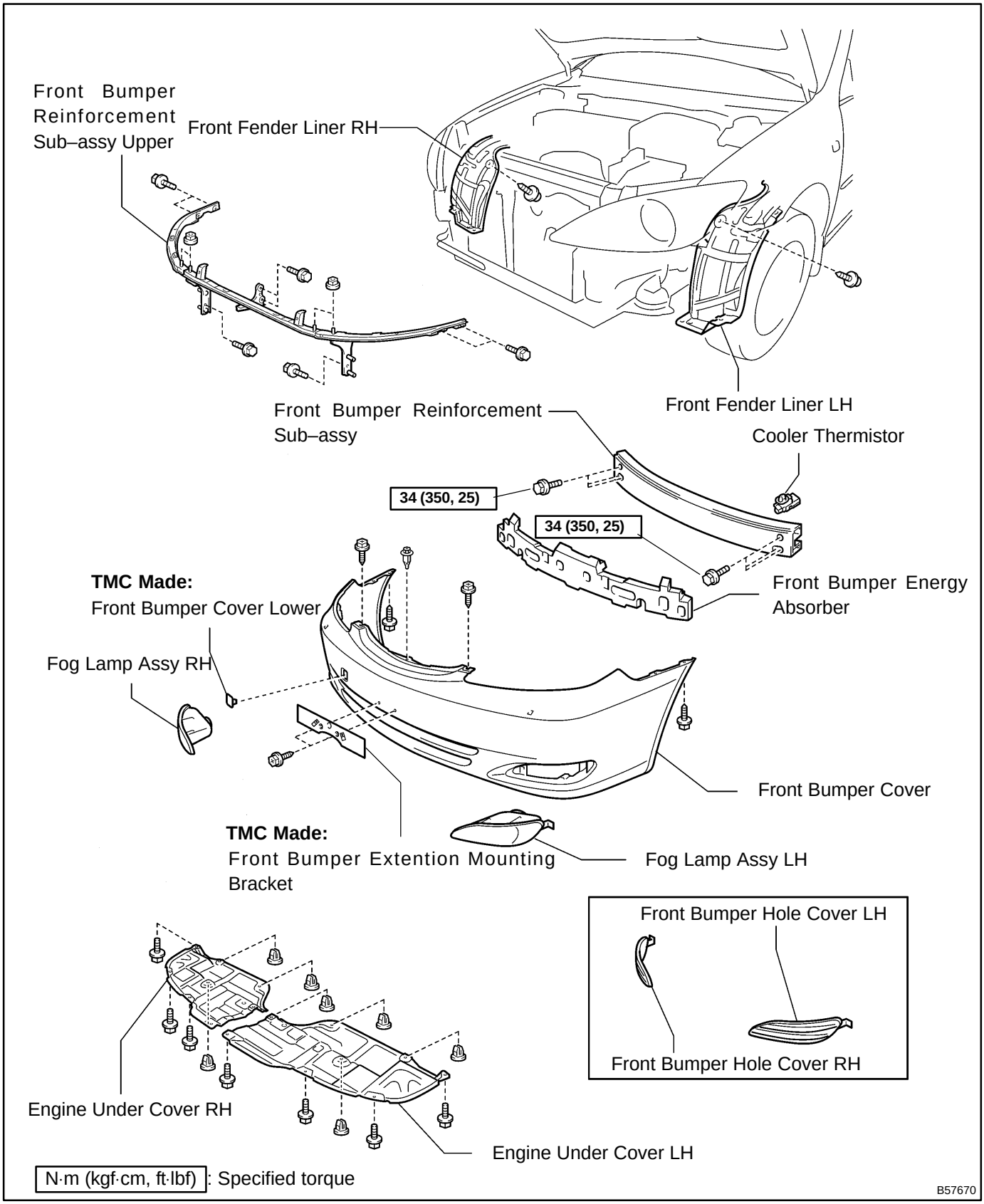

760BN–03

REPLACEMENT

HINT:

Installation is in the reverse order of the removal. But the installation is indicated only when it has a point.

1. REMOVE ENGINE UNDER COVER LH

(a) Remove the 4 screws.

(b) Using a screwdriver, remove the 4 clips and engine under cover.

2. REMOVE ENGINE UNDER COVER RH

(a) Remove the 3 screws.

(b) Using a screwdriver, remove the 3 clips and engine under cover.

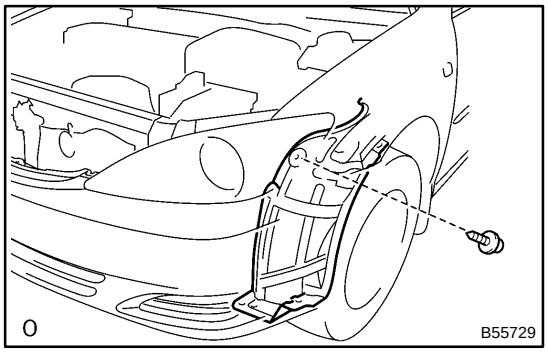

3. REMOVE FRONT FENDER LINER LH

(a) Remove the screw and a part of the front fender liner LH.

HINT:

Remove the screw and the front fender liner LH within the range that the front bumper cover can be removed.

4. REMOVE FRONT FENDER LINER RH

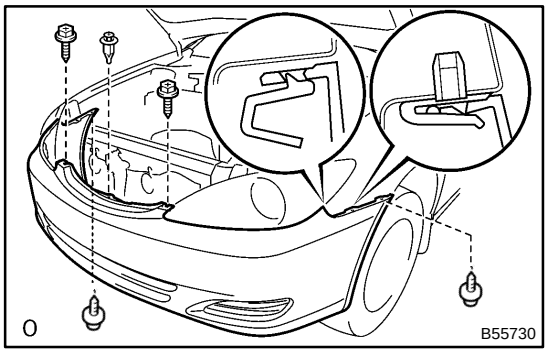

5. REMOVE FRONT BUMPER COVER

(a) Remove the 2 screws and 2 bolts.

(b) Using a clip remover, remove the clip.

(c) Disengage the hooks and remove the front bumper cover.

(d) Disconnect the fog lamp connectors (on the fog lamp option only).

6. REMOVE FRONT BUMPER ENERGY ABSORBER

7. REMOVE FRONT BUMPER REINFORCEMENT SUB–ASSY

(a) Disconnect the cooler thermistor connector and wire harness clips.

(b) Remove the 6 bolts and reinforcement.

8. REMOVE FRONT BUMPER REINFORCEMENT SUB–ASSY UPPER

(a) Remove the 8 bolts, 4 nuts and frontbumper reinforcement sub–assy upper.

9. REMOVE FOG LAMP ASSY LH (See page 65–12)

10. REMOVE FOG LAMP ASSY (See page 65–12)

11. REMOVE COOLER (AMBIENT TEMP. SENSOR) THERMISTOR

12. REMOVE FRONT BUMPER EXTENTION MOUNTING BRACKET (Only TMC made)

13. REMOVE FRONT BUMPER COVER LOWER (Only TMC made)

14. REMOVE FRONT BUMPER HOLE COVER RH

(a) Disengage the hooks and remove the front bumper hole cover.

15. REMOVE FRONT BUMPER HOLE COVER LH

16. INSTALL FRONT BUMPER REINFORCEMENT SUB–ASSY

(a) Install the front bumper reinforcement with 6 bolts.

Torque: 34 N·m (350 kgf·cm, 25 ft·lbf)

REAR BUMPER

COMPONENTS

760BL–03

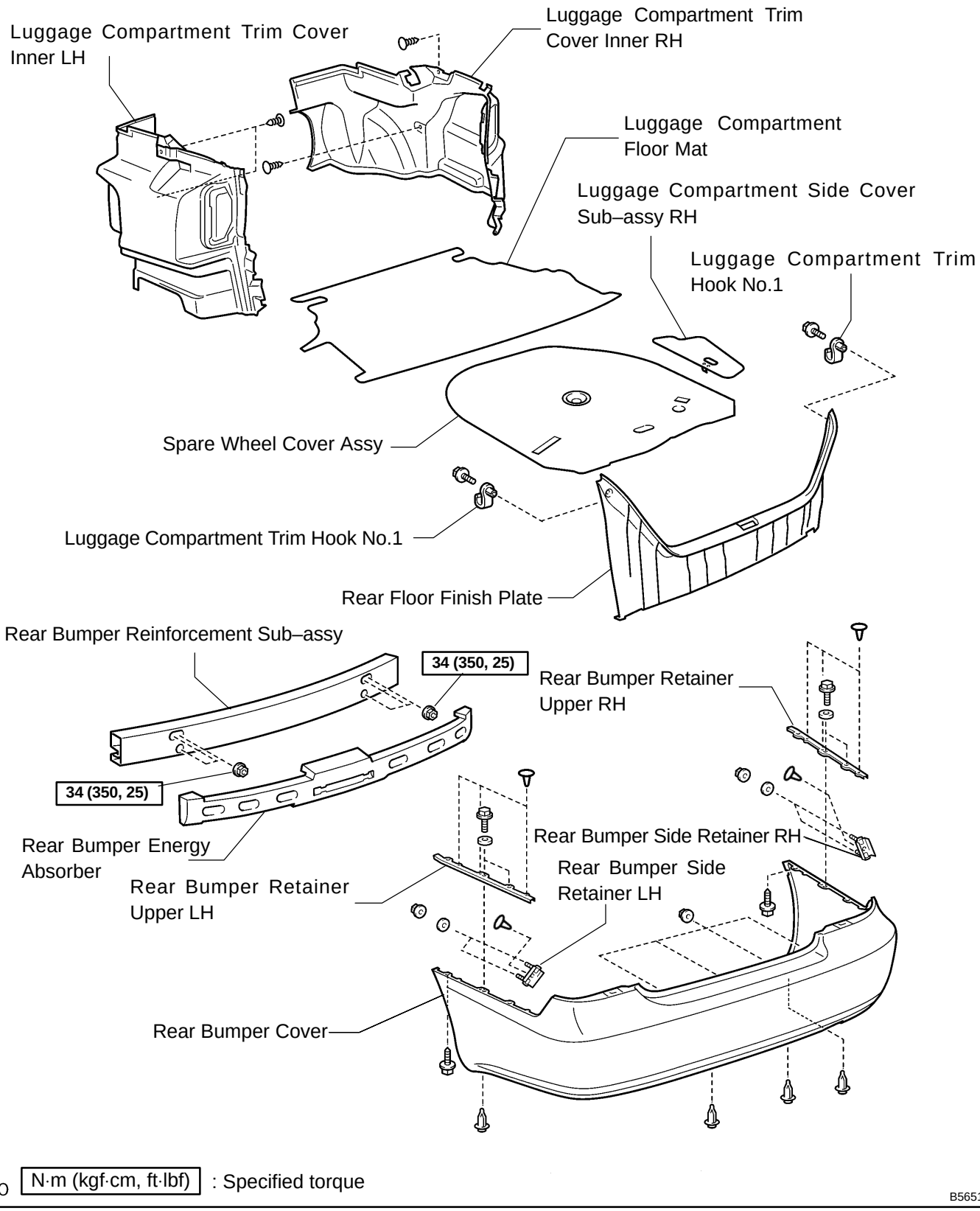

REPLACEMENT

HINT:

Installation is in the reverse order of the removal. But the installation is indicated only when it has a point.

1. REMOVE LUGGAGE COMPARTMENT FLOOR MAT

2. REMOVE SPARE WHEEL COVER ASSY

3. REMOVE LUGGAGE COMPARTMENT SIDE COVER SUB–ASSY RH

4. REMOVE LUGGAGE COMPARTMENT TRIM HOOK NO.1

(a) Remove the 2 bolts and luggage compartment trim hooks.

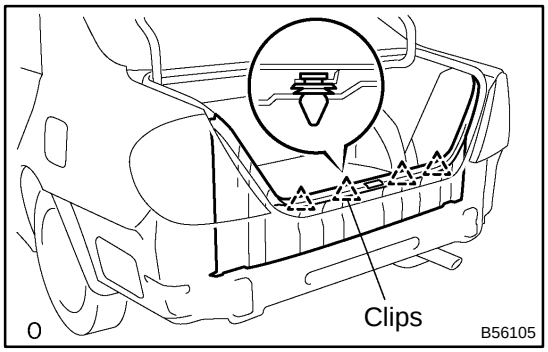

5. REMOVE REAR FLOOR FINISH PLATE

(a) Disengage the clips and remove the rear floor finish plate.

6. REMOVE LUGGAGE COMPARTMENT TRIM COVER INNER RH

(a) Using a clip remover, remove the 2 clips and luggage compartment trim cover inner.

7. REMOVE LUGGAGE COMPARTMENT TRIM COVER INNER LH

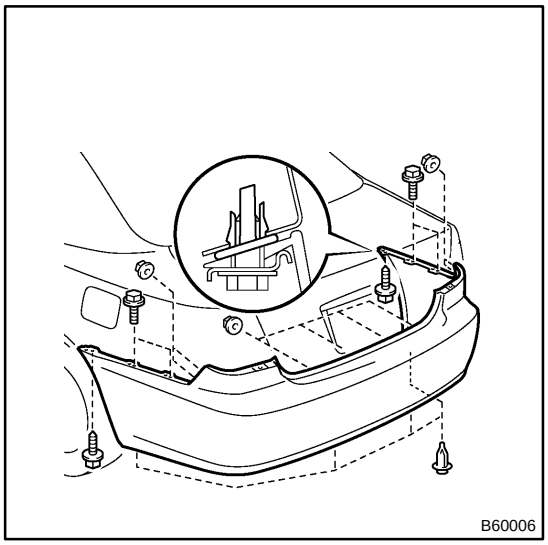

8. REMOVE REAR BUMPER COVER

(a) Remove the 8 nuts, 4 bolts and 4 clips.

(b) Remove the 2 screws and rear bumper cover.

(c) Disengage the rear bumper seal bracket and remove the rear bumper cover.

9. REMOVE REAR BUMPER SIDE RETAINER RH

(a) Remove the clip and rear bumper side retainer. (Only TMC made)

(b) Remove the rivet and rear bumper side retainer. (Only TMMK made)

10. REMOVE REAR BUMPER SIDE RETAINER LH

11. REMOVE REAR BUMPER RETAINER UPPER RH

(a) Remove the 3 clips and rear bumper retainer upper. (Only TMC made)

(b) Remove the 4 rivets and rear bumper retainer upper. (Only TMMK made)

12. REMOVE REAR BUMPER RETAINER UPPER LH

13. REMOVE REAR BUMPER ENERGY ABSORBER

14. REMOVE REAR BUMPER REINFORCEMENT SUB–ASSY

(a) Remove the 6 nuts and rear bumper reinforcement.

15. INSTALL REAR BUMPER REINFORCEMENT SUB–ASSY

(a) Install the front bumper reinforcement with 6 nuts.

Torque: 34 N·m (350 kgf·cm, 25 ft·lbf)

REAR SPOILER SUB–ASSY

760BK–02

REPLACEMENT

HINT:

Installation is in the reverse order of the removal. But the installation is indicated only when it has a point.

1. REMOVE LUGGAGE COMPARTMENT DOOR COVER

(a) Remove the 15 clips and luggage compartment door cover.

2. REMOVE REAR SPOILER SUB–ASSY

(a) Remove the 2 nuts.

(b) Put protective tape onto the body.

(c) Using a heat light, heat the spoiler 40 – 60°C (104 – 140°F).

NOTICE:

Do not heat the spoiler excessively.

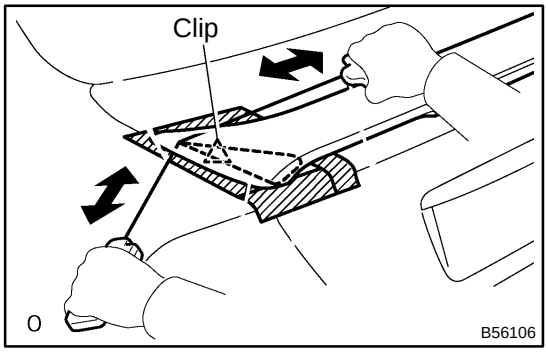

(d) Tie both piano wire ends to wooden blocks or similar objects.

(1) Scrape the adhesive tape off by pulling the piano wire as shown in the illustration.

(2) If reusing the rear spoiler, take care not to damage the rear spoiler.

NOTICE:

Do not damage the body.

(e) Disconnect the connector.

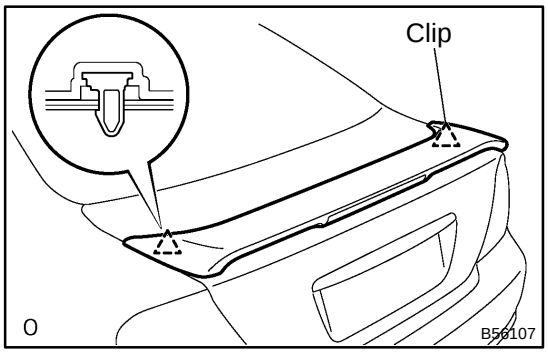

(f) Remove the 2 clips and rear spoiler.

3. REMOVE CENTER STOP LAMP ASSY (See page 65–16)

4. INSTALL REAR SPOILER SUB–ASSY

(a) Using a heat light, heat the body mounting surface to 40 – 60°C (104 – 140°F).

NOTICE:

Do not heat the body excessively.

(b) Remove the protective tape from the body.

(c) Wipe off the stains with cleaner.

(d) Clean the rear spoiler (if reusing the spoiler).

(1) Using a heat light, heat the rear spoiler to 40 – 60°C (104 – 140°F).

NOTICE:

Do not heat the spoiler excessively.

(2) Remove the adhesive tape from the rear spoiler.

(3) Wipe off the stains with cleaner.

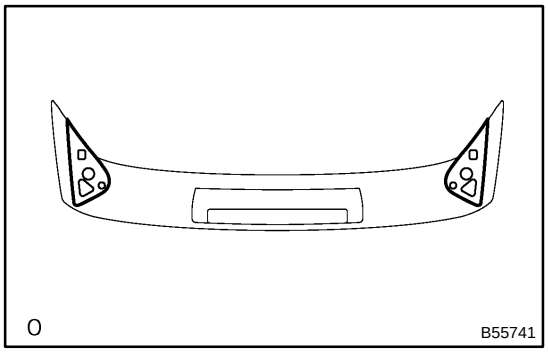

(4) Install new adhesive tape to the rear spoiler as shown in the illustration.

(e) Using a heat light, heat the body and moulding.

HINT:

- Body: 40 – 60°C (104 – 140°F)
- Moulding: 20 – 30°C (68 – 86°F)

(f) Install the rear spoiler with 2 nuts.

NAME PLATE

REPLACEMENT

760BZ–01

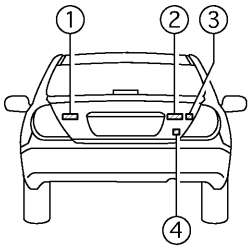

①PLATE, LUGGAGE COMPARTMENT DOOR NAME, NO.7

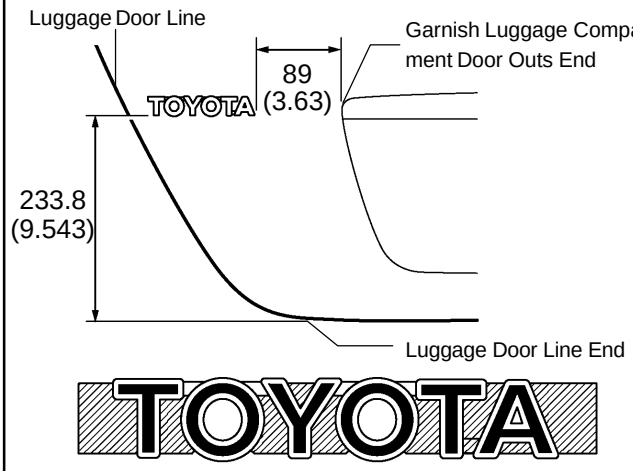

④PLATE, LUGGAGE COMPARTMENT DOOR, NO.4

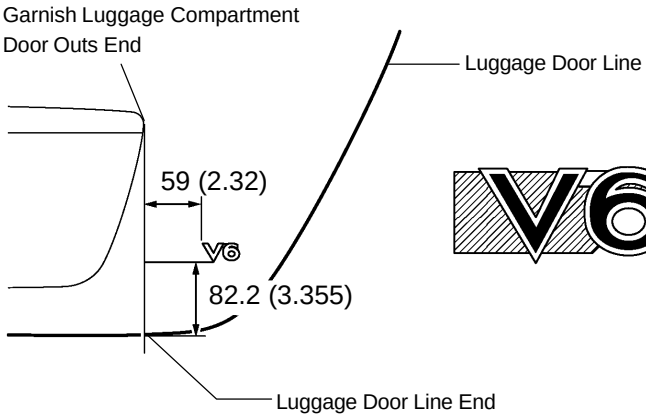

② PLATE, LUGGAGE COMPARTMENT DOOR NAME, NO.2
③ PLATE, LUGGAGE COMPARTMENT DOOR, NO.3

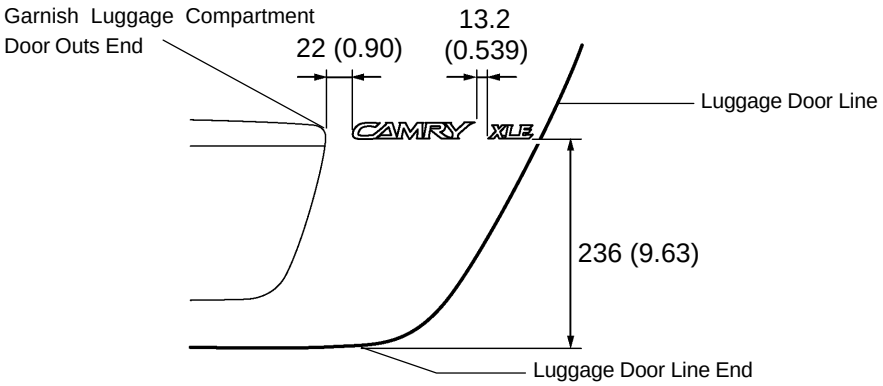

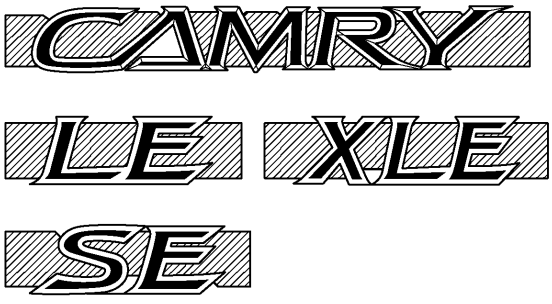

O

mm(in.)

B55976

FRONT DOOR BELT MOULDING ASSY LH

760CA–01

REPLACEMENT

HINT:

- Installation is in the reverse order of the removal. But the installation is indicated only when it has a point.
- In the RH side, work in the same procedure as in the LH side.

1. **REMOVE POWER WINDOW REGULATOR MASTER SWITCH ASSY**
   (See page 75–8)
2. **REMOVE FRONT DOOR LOWER FRAME BRACKET GARNISH LH**
   (See page 75–8)
3. **REMOVE FRONT DOOR INSIDE HANDLE BEZEL PLUG LH**
   (See page 75–8)
4. **REMOVE FRONT DOOR TRIM BOARD SUB–ASSY LH**
   (See page 75–8)
5. **REMOVE OUTER REAR VIEW MIRROR ASSY LH**
   (See page 75–8)

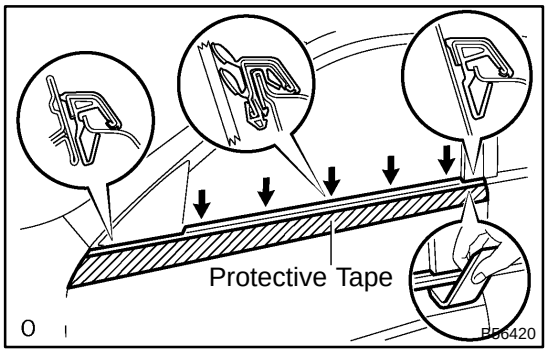

6. **REMOVE FRONT DOOR BELT MOULDING ASSY LH**

(a) Put protective tape under the front door belt moulding.
(b) Using a moulding remover or scraper, remove the front door belt moulding.

HINT:
Tape the scraper tip before use.

REAR DOOR BELT MOULDING ASSY LH

760CB–01

REPLACEMENT

HINT:

- Installation is in the reverse order of the removal. But the installation is indicated only when it has a point.
- In the RH side, work in the same procedure as in the LH side.

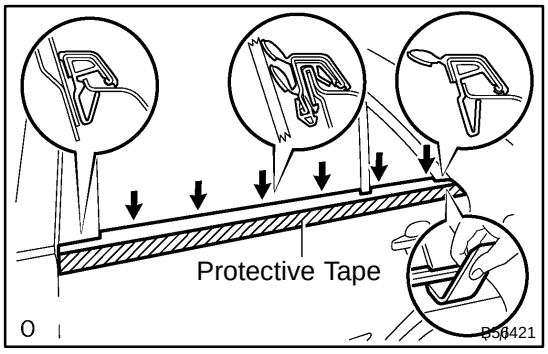

1. REMOVE REAR DOOR BELT MOULDING ASSY LH

(a) Put protective tape under the rear door belt moulding.
(b) Using a moulding remover or scraper, remove the rear door belt moulding.

HINT:

Tape the scraper tip before use.

ROOF DRIP SIDE FINISH MOULDING CENTER LH

760BP–03

REPLACEMENT

HINT:

- Installation is in the reverse order of the removal. But the installation is indicated only when it has a point.
- In the RH side, work in the same procedure as in the LH side.

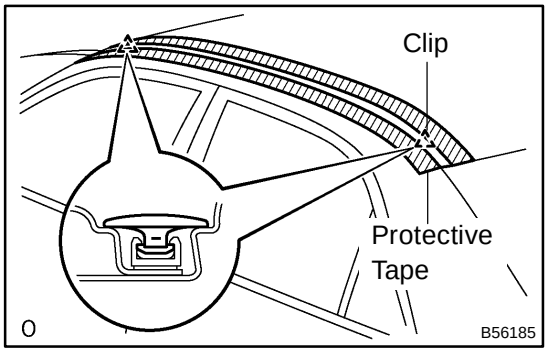

1. REMOVE ROOF DRIP SIDE FINISH MOULDING CENTER LH

(a) Tape the circumference of the moulding for protection.

(b) Using a remover for the roof moulding, release the engagements of the clips both in the front and rear ends of the moulding, and then remove the roof drip side finish moulding.

NOTICE:

- **Do not remove the clips.**
- **If the clips are damaged or removed accidentally, exchange them for supplied ones.**

2. INSTALL ROOF DRIP SIDE FINISH MOULDING CLIP NO.1

NOTICE:

Only when exchanging the clips.

(a) Remove the adhesive tape that remains on the mounting surface of the body, and then clean the surface with white gasoline.

(b) Heat up the clip installation surfaces of the body with a heat light.
Body: 40 – 60°C (104 – 140°F)
Moulding: 20 – 30°C (68 – 86°F)

NOTICE:

Do not heat the moulding excessively.

(c) Set the supplied clips into the positions as shown in the illustration, and press–fit those clips by hand to install them.

(d) Install the moulding when 30 minutes or more have passed after press–fitting the clips.

HINT:

- Initial hardening time: 30 minutes
- Perfect hardening time: 24 hours

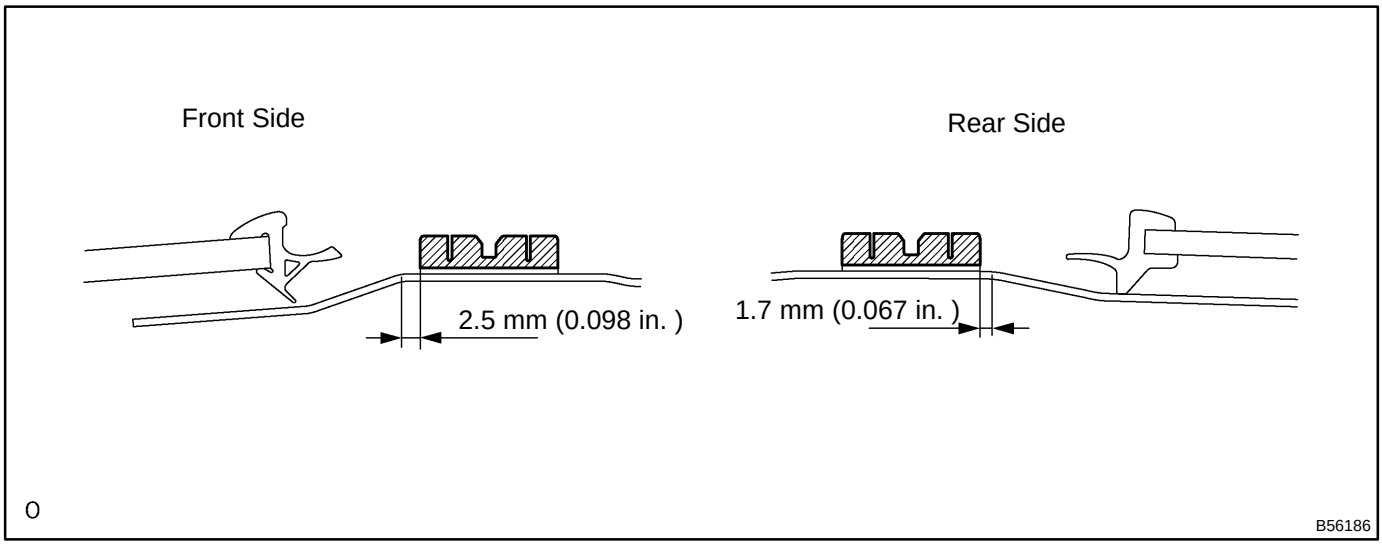
Front Side
Rear Side
2.5 mm (0.098 in.)
1.7 mm (0.067 in.)
B56186

OUT SIDE MOULDING

760BQ–03

REPLACEMENT

HINT:

- Installation is in the reverse order of the removal. But, the installation is indicated only when it has a point.
- In the RH side, work in the same procedure as in the LH side.

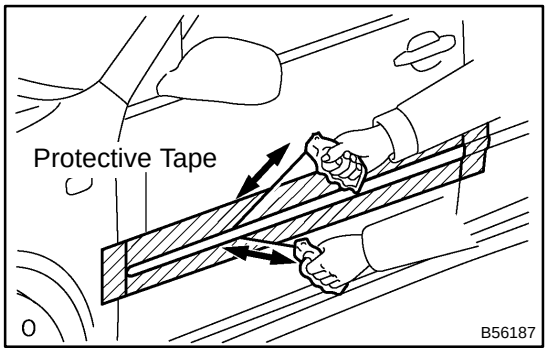

1. REMOVE OUT SIDE MOULDING

(a) Using a heat light, heat the body moulding to 40 – 60°C (104 – 140°F).

NOTICE:

Do not heat the moulding excessively.

(b) Tie both piano wire ends to wooden block or similar object.

(c) Scrape the adhesive tape off by pulling the piano wire as shown in the illustration.

NOTICE:

- **If reusing the moulding, take care not to damage the moulding.**
- **Do not damage the body.**

2. INSTALL OUT SIDE MOULDING

(a) Using a heat light, heat the body mounting surface to 40 – 60°C (104 – 140°F).

NOTICE:

Do not heat the body excessively.

(b) Remove the protective tape from the body.

(c) Wipe off the stains with cleaner.

(d) Clean the moulding (if reusing the moulding).

(1) Using a heat light, heat the body moulding to 20 – 30°C (68 – 86°F).

NOTICE:

Do not heat the body excessively.

(2) Remove the adhesive tape from the moulding.

(3) Wipe off the stains with cleaner.

(4) Apply new adhesive tape to the moulding as shown in the illustration.

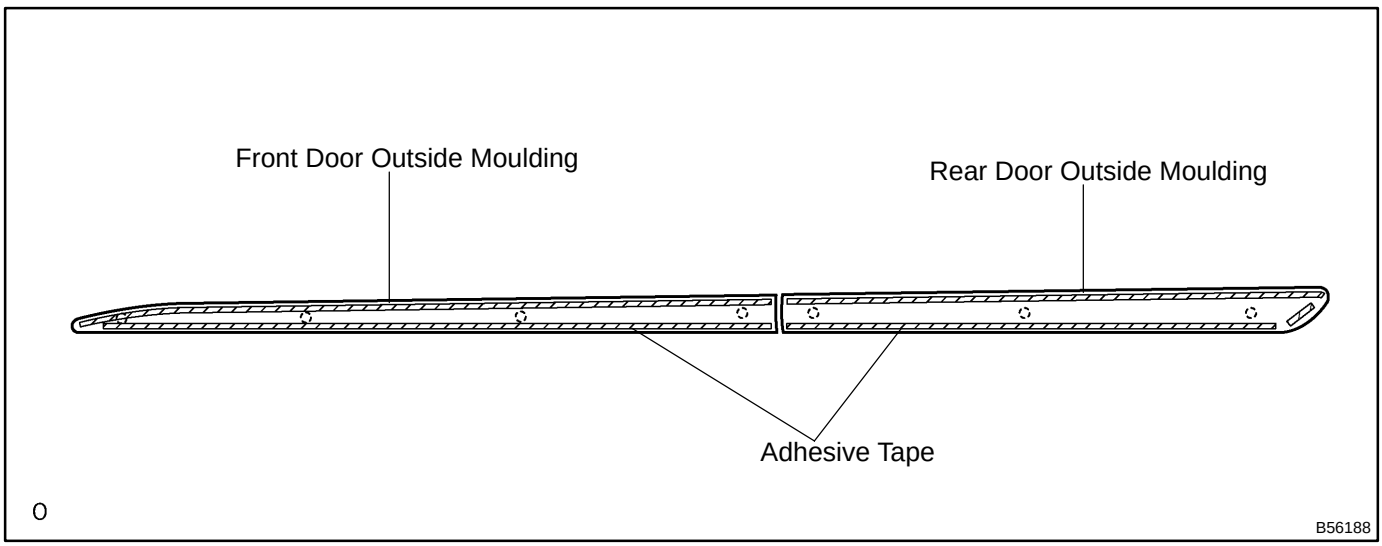

(e) Using a heat light, heat the body and moulding.

HINT:

- Body: 40 – 60°C (104 – 140°F)
- Moulding: 20 – 30°C (68 – 86°F)

NOTICE:

Do not heat the body excessively.

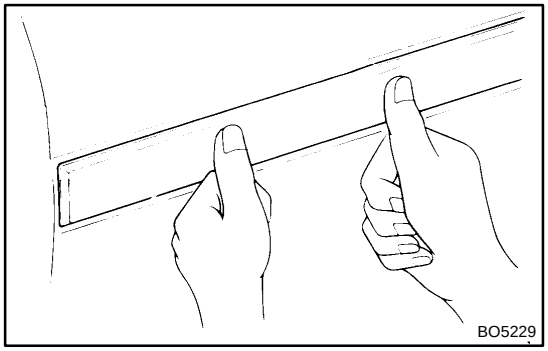

(f) Lift the moulding release sheet from the face moulding.

NOTICE:

- **When the moulding release sheet is removed, take care that no dirt or no dust can get onto the uncoated area.**
- **Do not apply excessive force onto the moulding, but steady pressure with your thumbs.**

ROCKER PANEL MOULDING LH

760BR–03

REPLACEMENT

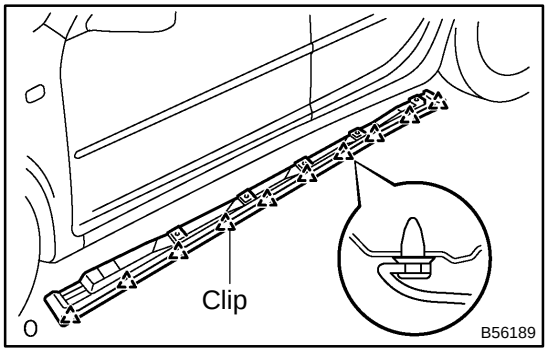

1. REMOVE ROCKER PANEL MOULDING LH

(a) Remove the 6 screws.

(b) Using a screwdriver, remove the rocker panel moulding.

HINT:

Tape the screwdriver tip before use.

LUGGAGE COMPARTMENT DOOR GARNISH SUB–ASSY OUTSIDE

760BS–03

REPLACEMENT

1. REMOVE LUGGAGE COMPARTMENT DOOR COVER

(a) Remove the 15 screws and luggage compartment door cover.

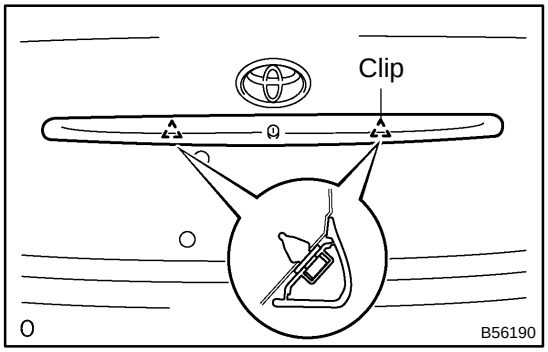

2. REMOVE LUGGAGE COMPARTMENT DOOR GARNISH SUB–ASSY OUTSIDE

(a) Remove the 4 screws.

(b) Using a screwdriver, remove the luggage compartment door garnish outside.

HINT:

Tape the screwdriver tip before use.

FRONT FLOOR FOOTREST

760BT–03

REPLACEMENT

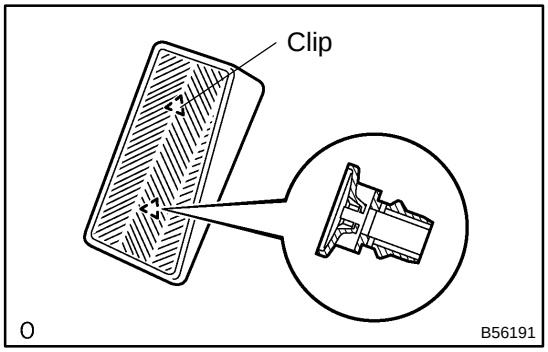

1. REMOVE FRONT FLOOR FOOTREST

(a) Holding the floor mat, disengage the clips from the upper with a screwdriver to remove the front floor footrest.

HINT:

Tape the screwdriver tip before use.

NOTICE:

Warm the inside of the vehicle well before removal.

(b) Disengage the foot rest clips, and then remove the 2 clips from the front floor footrest.

2. INSTALL FRONT FLOOR FOOTREST

(a) Install the footrest clips by engaging the claws with the front floor footrest.

(b) Before installation, check that the part to be engaged with the clips of front floor footrest is not damaged.

NOTICE:

If it is damaged, replace it with a new one.

ROOF HEADLINING ASSY

COMPONENTS

760C7–01

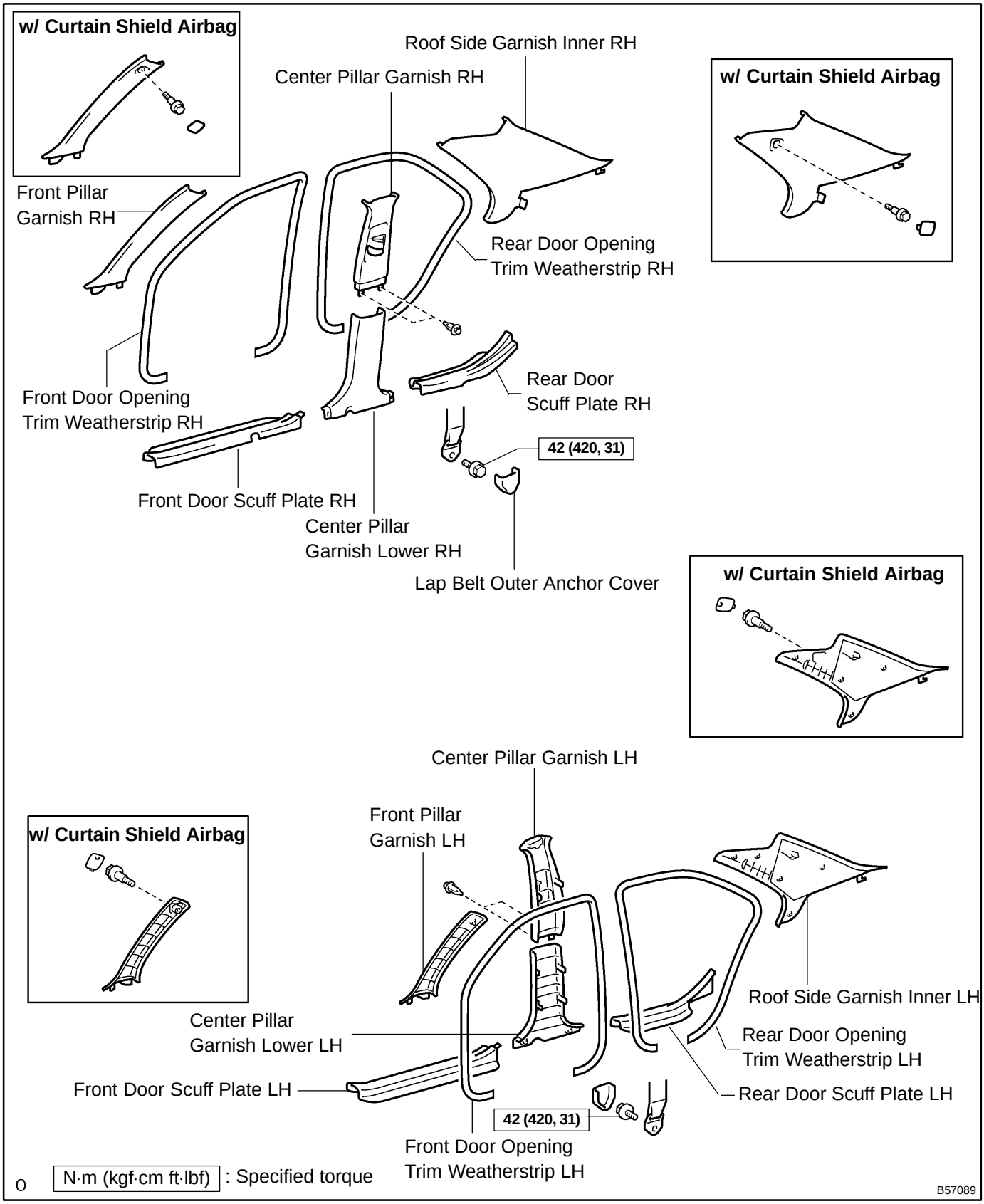

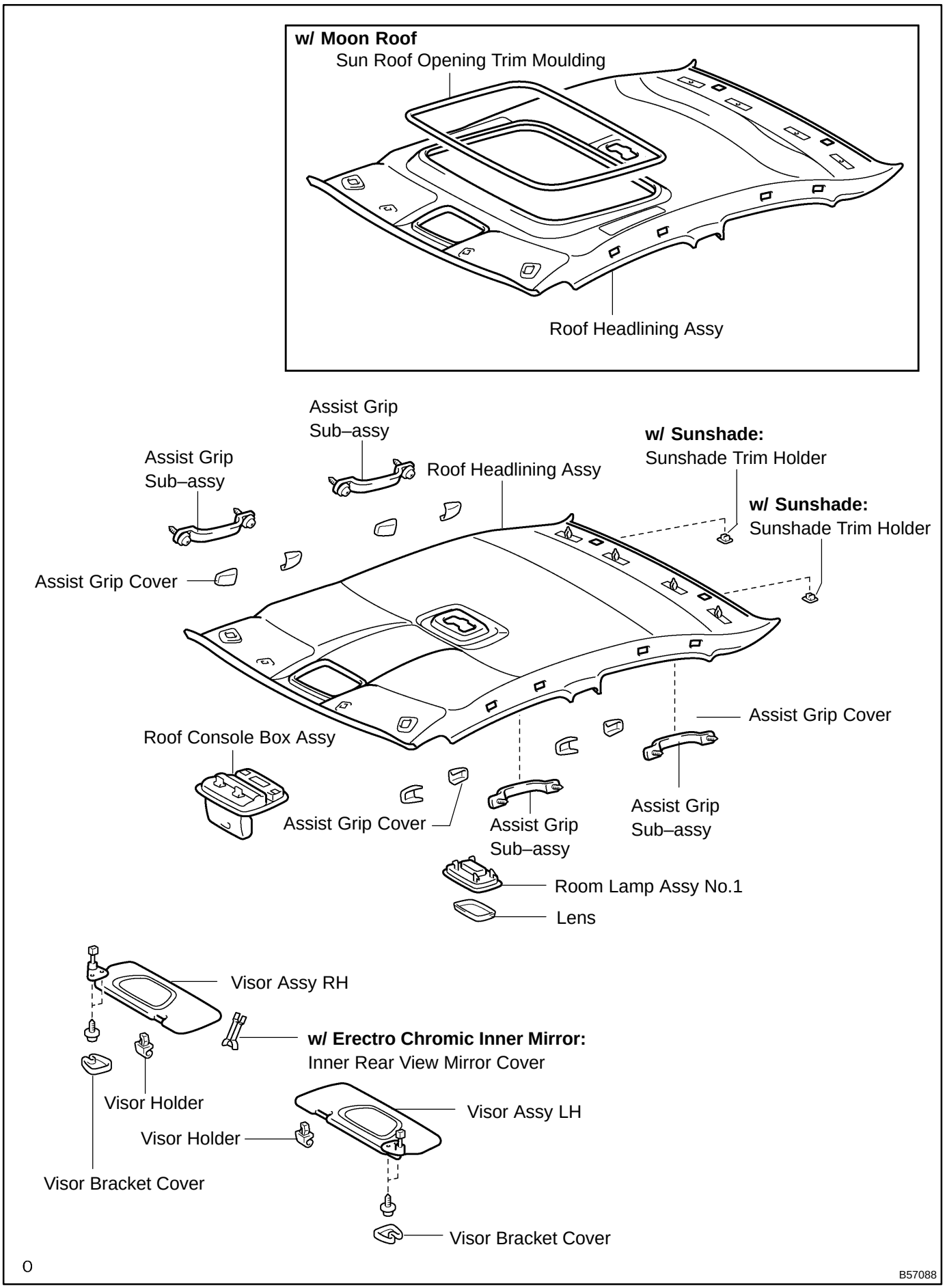
w/ Moon Roof
Sun Roof Opening Trim Moulding
Roof Headlining Assy
Assist Grip Sub–assy
Assist Grip Sub–assy
Roof Headlining Assy
w/ Sunshade:
Sunshade Trim Holder
w/ Sunshade:
Sunshade Trim Holder
Assist Grip Cover
Assist Grip Cover
Roof Console Box Assy
Assist Grip Cover
Assist Grip Sub–assy
Assist Grip Sub–assy
Room Lamp Assy No.1
Lens
Visor Assy RH
w/ Erectro Chromic Inner Mirror:
Inner Rear View Mirror Cover
Visor Holder
Visor Assy LH
Visor Holder
Visor Bracket Cover
Visor Bracket Cover
B57088

760C8–01

REPLACEMENT

HINT:

Installation is according to the reverse order of the removal.

1. **REMOVE FRONT SEAT ASSEMBLY RH**
   (Power Seat Type: See page 72–7, 72–14, Manual Seat Type: See page 72–20, 72–27)
2. **REMOVE FRONT SEAT ASSEMBLY LH**
   (Power Seat Type: See page 72–7, 72–14, Manual Seat Type: See page 72–20, 72–27)
3. **REMOVE REAR SEAT CUSHION ASSY (See page 72–34, 72–38)**
4. **REMOVE REAR SIDE SEAT BACK ASSY RH**
   (See page 72–34, 72–38)
5. **REMOVE REAR SIDE SEAT BACK ASSY LH**
   (See page 72–34, 72–38)
6. **REMOVE REAR SEAT BACK ASSY (See page 72–34, 72–38)**
7. **REMOVE CONSOLE PANEL UPPER REAR**
   (See page 71–12)
8. **REMOVE RR CONSOLE BOX (See page 71–12)**
9. **REMOVE CONSOLE PANEL UPPER**
   (See page 71–12)
10. **REMOVE CONSOLE BOX ASSY REAR**
    (See page 71–12)
11. **REMOVE CONSOLE BOX DUCT NO.1**
    (See page 55–29)
12. **REMOVE AIR DUCT REAR NO.1**
    (See page 55–29)
13. **REMOVE AIR DUCT REAR NO.2**
    (See page 55–29)
14. **REMOVE FLOOR SHIFT ASSY(See page 40–39)**

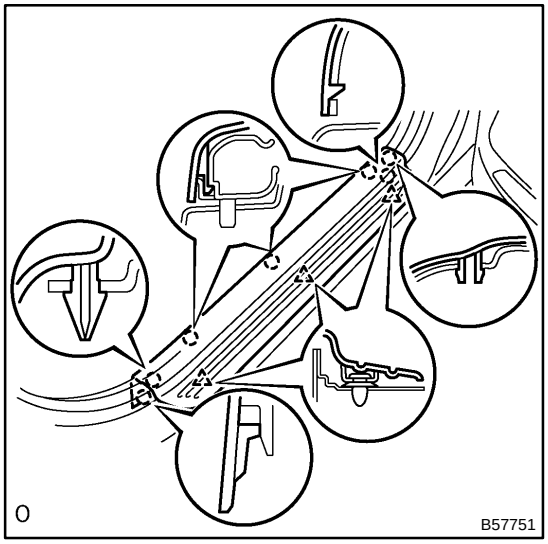

15. **REMOVE FRONT DOOR SCUFF PLATE RH**

(a) Using a screwdriver, remove the front door scuff plate.

HINT:

Tape the screwdriver tip before use.

(b) Employ the same manner described above to the other side.

16. **REMOVE FRONT DOOR SCUFF PLATE LH**

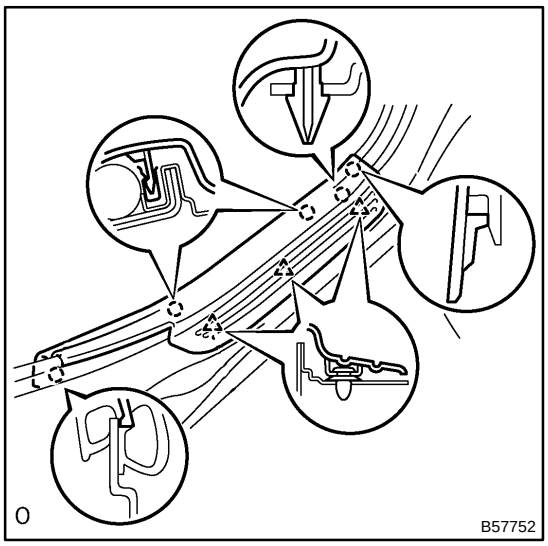

17. REMOVE REAR DOOR SCUFF PLATE RH

(a) Using a screwdriver, remove the rear door scuff plate.

HINT:

Tape the screwdriver tip before use.

(b) Employ the same manner described above to the other side.

18. REMOVE REAR DOOR SCUFF PLATE LH

19. REMOVE FRONT DOOR OPENING TRIM WEATHERSTRIP RH

20. REMOVE FRONT DOOR OPENING TRIM WEATHERSTRIP LH

21. REMOVE REAR DOOR OPENING TRIM WEATHERSTRIP RH

22. REMOVE REAR DOOR OPENING TRIM WEATHERSTRIP LH

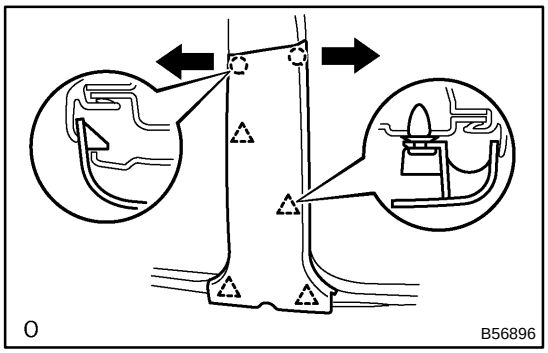

23. REMOVE CENTER PILLAR GARNISH LOWER RH

(a) Pull the center pillar lower garnish upward to remove it.

(b) Employ the same manner described above to the other side.

24. REMOVE CENTER PILLAR GARNISH LOWER LH

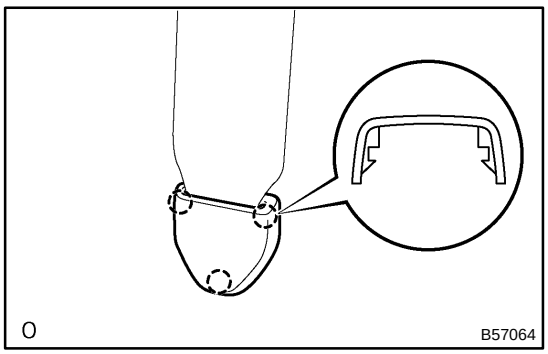

25. REMOVE CENTER PILLAR GARNISH UPPER RH

(a) Using a screwdriver, remove the lap belt outer anchor cover.

HINT:

Tape the screwdriver tip before use.

(b) Remove the bolt and front seat outer belt floor anchor.

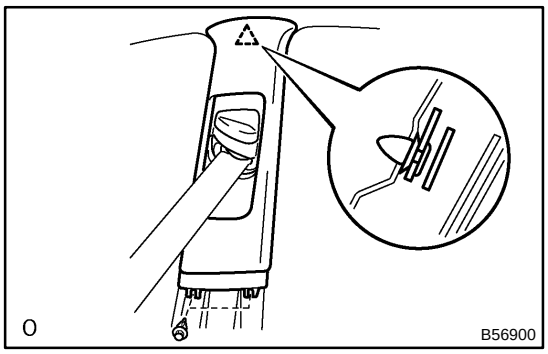

(c) Remove the 2 clips
(d) Using a screwdriver, remove the center pillar upper garnish.

HINT:
Tape the screwdriver tip before use.

(e) Employ the same manner described above to the other side.

26. REMOVE CENTER PILLAR GARNISH UPPER LH

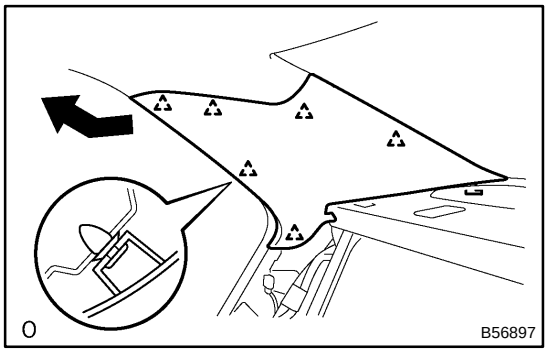

27. REMOVE ROOF SIDE GARNISH INNER RH(W/O CURTAIN SHIELD AIR BAG)

(a) Using a screwdriver, remove the roof side garnish inner.

HINT:
Tape the screwdriver tip before use.

(b) Employ the same manner described above to the other side.

28. REMOVE ROOF SIDE GARNISH INNER LH(W/O CURTAIN SHIELD AIR BAG)

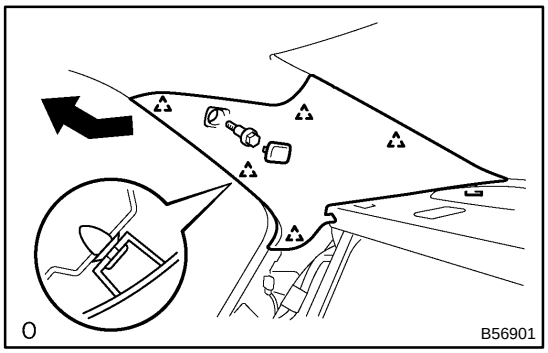

29. REMOVE ROOF SIDE GARNISH INNER RH(W/ CURTAIN SHIELD AIR BAG)

(a) Using a screwdriver, remove the roof side garnish inner cover.

HINT:
Tape the screwdriver tip before use.

(b) Remove the bolt.
(c) Using a screwdriver, remove the roof side garnish inner.

HINT:
Tape the screwdriver tip before use.

30. REMOVE ROOF SIDE GARNISH INNER LH(W/ CURTAIN SHIELD AIR BAG)

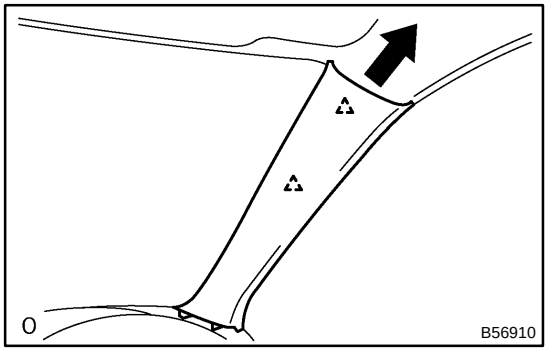

31. REMOVE FRONT PILLAR GARNISH RH(W/O CURTAIN SHIELD AIR BAG)

(a) Using a screwdriver, remove the front pillar garnish.

HINT:
Tape the screwdriver tip before use.

(b) Employ the same manner described above to the other side.

32. REMOVE FRONT PILLAR GARNISH LH(W/O CURTAIN SHIELD AIR BAG)

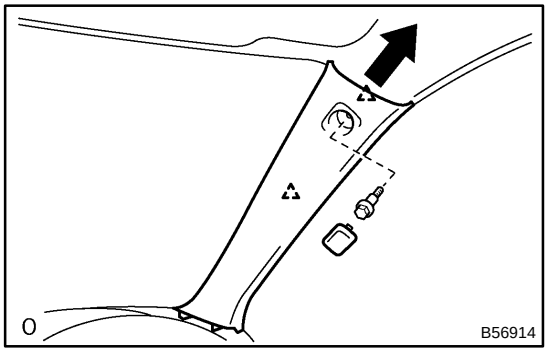

33. REMOVE FRONT PILLAR GARNISH RH(W/ CURTAIN SHIELD AIR BAG)

(a) Using a screwdriver, remove the front pillar garnish cover.
HINT:
Tape the screwdriver tip before use.
(b) Remove the bolt.
(c) Using a screwdriver, remove the front pillar garnish.
HINT:
Tape the screwdriver tip before use.

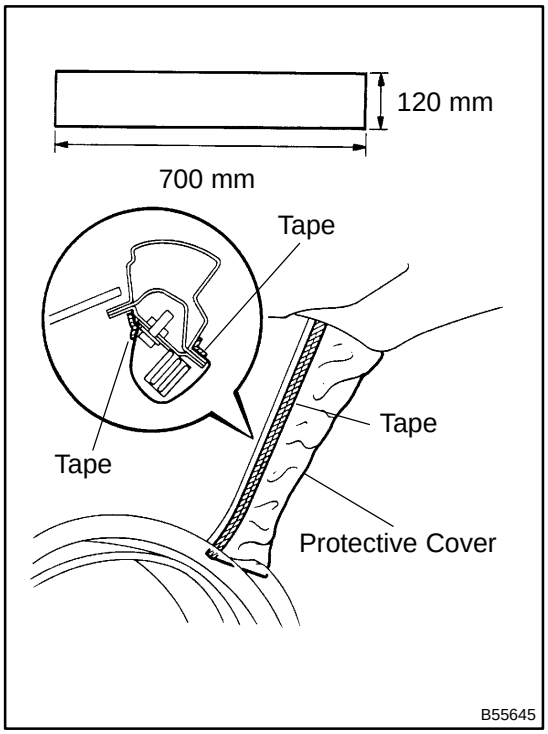

(d) Protect the curtain shield airbag.
NOTICE:
Cover the curtain shield airbag with the protection cover as soon as the front pillar garnish is removed.
(1) Cover the airbag with cloth or nylon of 700 mm (27.56 in.) × 120 mm (4.72 in.) and fix the ends of the cover with tape, as shown in the illustration.
(e) Employ the same manner described above to the other side.

34. REMOVE FRONT PILLAR GARNISH LH(W/ CURTAIN SHIELD AIR BAG)

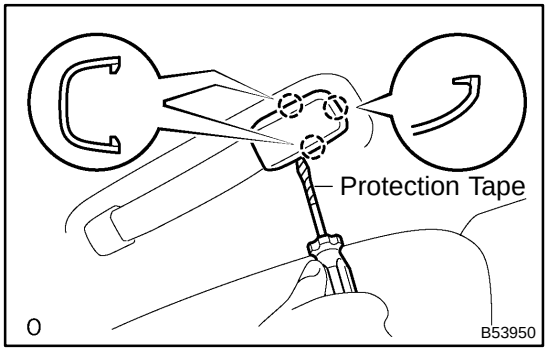

35. REMOVE ASSIST GRIP SUB–ASSY

(a) Using a screwdriver, remove the assist grip cover.
HINT:
Tape the screwdriver tip before use.
(b) Remove the 2 screws and assist grip.

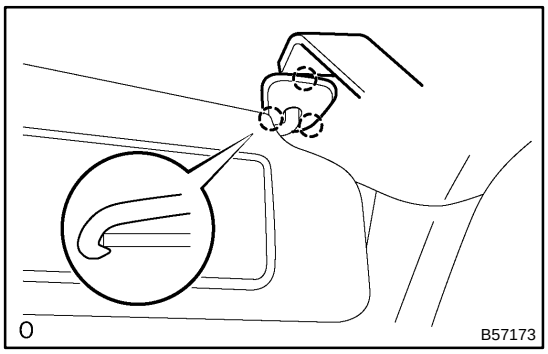

36. REMOVE RH VISOR ASSY

(a) Using a moulding remover, remove the visor bracket cover.

HINT:
Tape the screwdriver tip before use.

(b) Remove the 2 screws and assist grip.

37. REMOVE LH VISOR ASSY

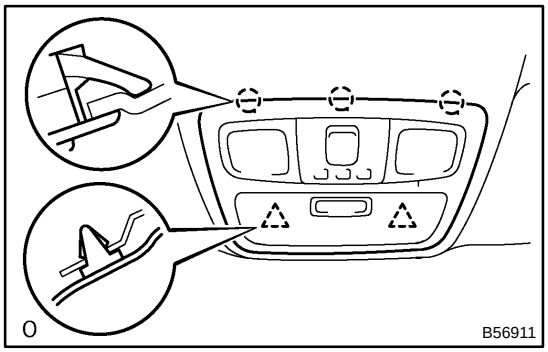

38. REMOVE ROOF CONSOLE BOX ASSY

(a) Using a screwdriver, remove the roof console box then disconnect the connector.

HINT:
Tape the screwdriver tip before use.

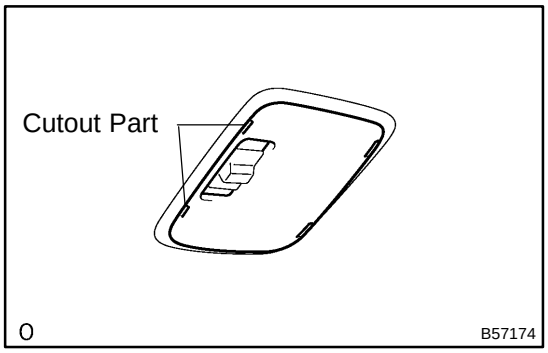

39. REMOVE ROOM LAMP ASSY NO.1

(a) Using a screwdriver, remove the lens.

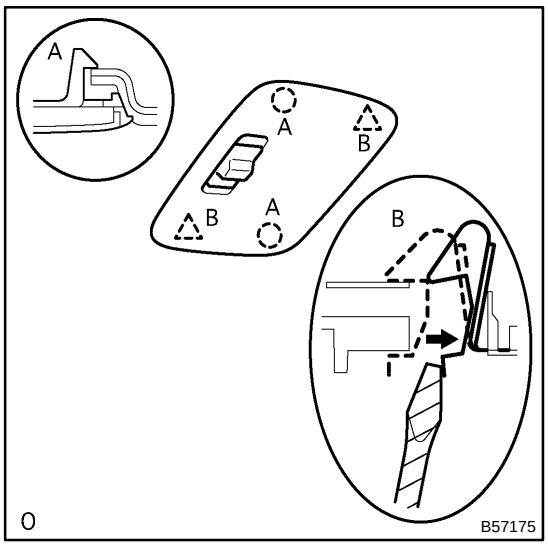

(b) Using a screwdriver, remove the room lamp assembly No.1 then disconnect the connector.

HINT:
Tape the screwdriver tip before use.

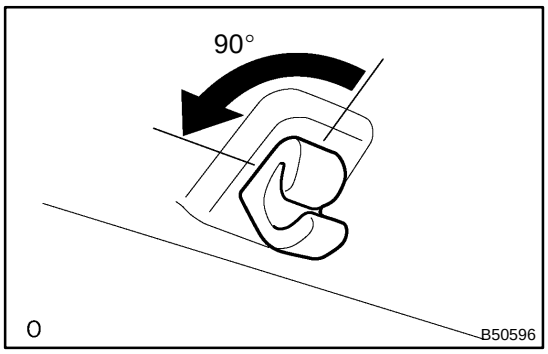

40. REMOVE VISOR HOLDER

(a) Remove the holder of the sun visor by turning it to the left.

41. REMOVE SUN ROOF OPENING TRIM MOULDING(W/ SLIDING ROOF)

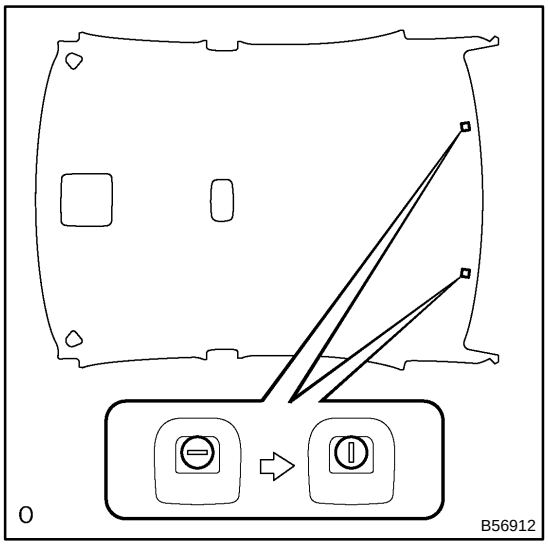

42. REMOVE ROOF HEADLINING ASSY

(a) Remove the 2 sunshade trim holders.
(b) w/ Erectro chromic inner mirror:
Remove the inner rear view mirror cover.
(c) Tear off the tape on the adhered part of the wire harness.

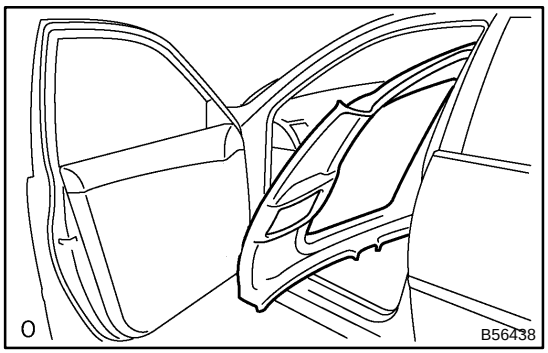

(d) Remove the headlining assembly from the passenger's door.

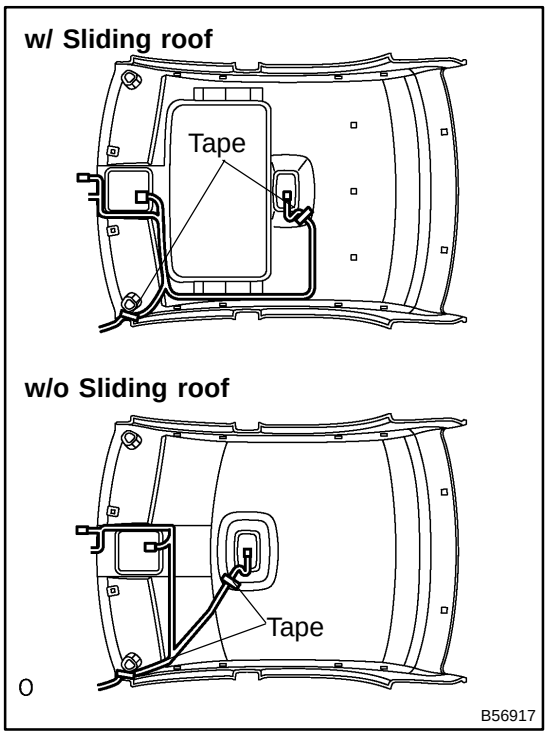

43. INSTALL ROOF HEADLINING ASSY

(a) Align the markings, then install the wire harness with tape.
HINT:
Be careful for dirt or foreign objects not to stick to the adhered part when peeling the double–stick tape.
(b) Attach the roof wire harness across the adhered part
NOTICE:
Roof wire harness should be attached securely.

44. INSTALL FRONT SEAT ASSEMBLY LH
(Power Seat Type: See page 72–7, 72–14, Manual Seat Type: See page 72–20, 72–27)

45. INSTALL FRONT SEAT ASSEMBLY RH
(Power Seat Type: See page 72–7, 72–14, Manual Seat Type: See page 72–20, 72–27)

IGNITION OR STARTER SWITCH ASSY

8001R–01

REPLACEMENT

1. REMOVE INSTRUMENT PANEL SUB–ASSY LOWER
(See page 71–12)

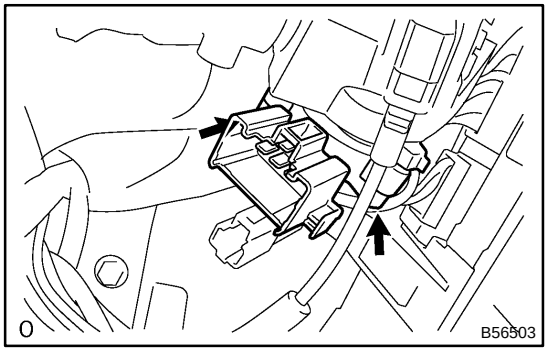

2. REMOVE IGNITION OR STARTER SWITCH ASSY

(a) Disconnect the ignition switch connector and unlock warning switch connector.
(b) Remove the clamp.
(c) Remove the 2 screws and ignition switch.

8001S–01

INSPECTION

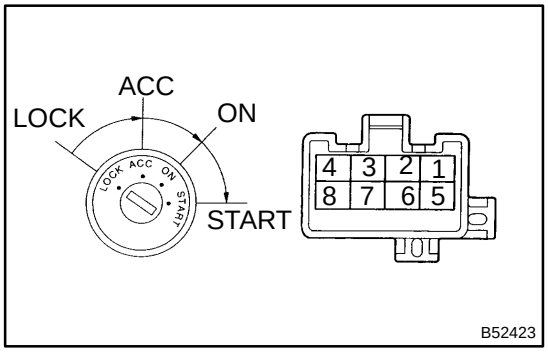

1. INSPECT IGNITION OR STARTER SWITCH ASSY

(a) Inspect the ignition switch continuity.

Standard:

Switch position	Tester connection	Specified condition
LOCK	–	No continuity
ACC	2 ⇔ 3	Continuity
ON	2 ⇔ 3 ⇔ 4 6 ⇔ 7	Continuity
START	1 ⇔ 2 ⇔ 4 6 ⇔ 7 ⇔ 8	Continuity

If the continuity is not as specified, replace the switch.

CRUISE CONTROL MAIN SWITCH ASSY

8201M–02

REPLACEMENT

1. **DISCONNECT BATTERY NEGATIVE TERMINAL**
2. **REMOVE STEERING WHEEL COVER LOWER NO.2**

3. **REMOVE STEERING WHEEL COVER LOWER NO.3(W/O STEERING PAD SWITCH 4 SPOKE STEERING WHEEL)**

4. **REMOVE CONNECTOR COVER(W/ STEERING PAD SWITCH 4 SPOKE STEERING WHEEL)**
   (See page 82–5)
5. **REMOVE STEERING WHEEL COVER LOWER NO.3(3 SPOKE STEERING WHEEL ASSY)**

6. **INSPECT PLACE FRONT WHEELS FACING STRAIGHT AHEAD**
7. **REMOVE HORN BUTTON ASSY**
   (See page 60–15)
8. **REMOVE STEERING WHEEL ASSY**

   SST 09950–50013 (09951–05010, 09952–05010, 09953–05020, 09954–05021)
9. **REMOVE STEERING PAD SWITCH(W/ STEERING PAD SWITCH 4 SPOKE STEERING WHEEL)**
   (See page 82–5)

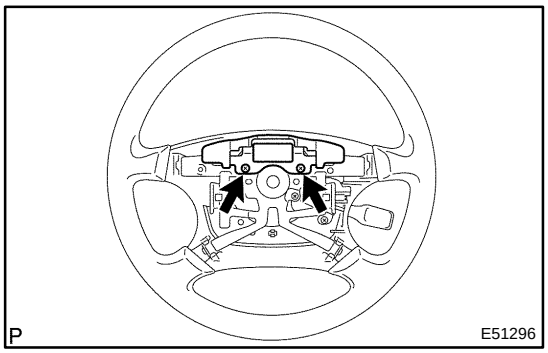

10. REMOVE CRUISE CONTROL MAIN SWITCH ASSY

(a) 4 spoke steering wheel assy:
Remove the 2 screws and steering wheel damper.

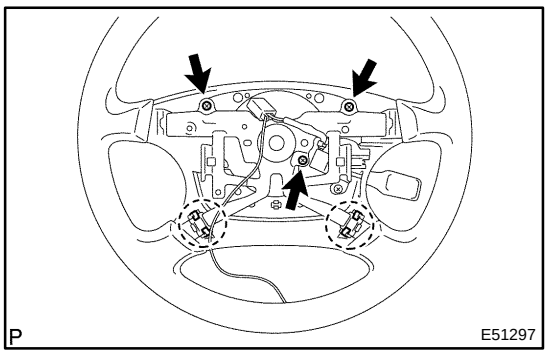

(b) 4 Spoke steering wheel assy:
Remove the 3 screws.

(c) 4 spoke steering wheel assy:
Disengage the 2 claws and remove the steering wheel boss cover LWR.

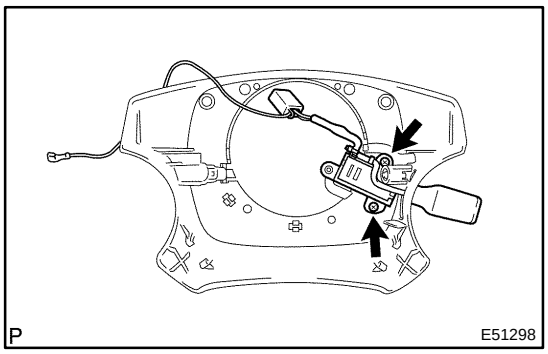

(d) 4 spoke steering wheel assy:
Remove the 2 screws and cruise control main switch assy.

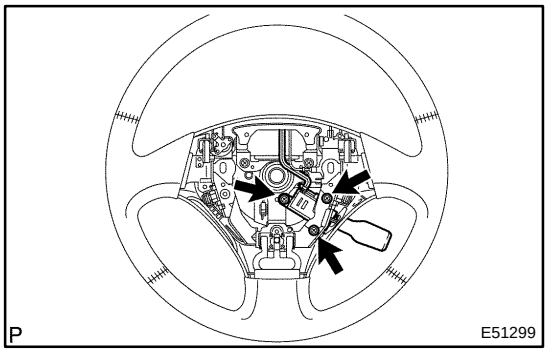

(e) 3 spoke steering wheel assy:
Remove the 3 screws.

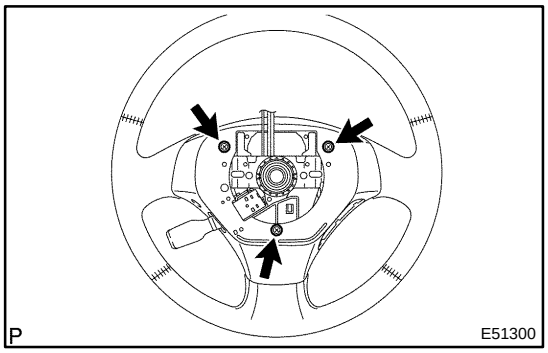

(f) 3 spoke steering wheel assy:
Reverse the steering wheel, remove the 3 screws and cruise control main switch assy.

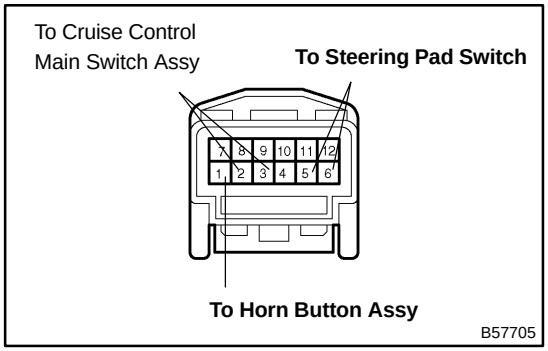

(g) Disengage the wiring pins other than the cruise control main switch assy from the connector, and pull them out.

11. CENTER SPIRAL CABLE(See page 60–25)
12. INSTALL STEERING WHEEL ASSY
(See page 50–9 or 50–22)
13. INSPECT STEERING WHEEL CENTER POINT
(See page 50–9 or 50–22)
14. INSPECT HORN BUTTON ASSY
(See page 60–15)
15. INSTALL HORN BUTTON ASSY
(See page 60–15)

16. INSPECT SRS WARNING LIGHT

CLUTCH SWITCH ASSY

8201K–01

REPLACEMENT

1. **REMOVE FRONT DOOR SCUFF PLATE LH**
   (See page 71–12)
2. **REMOVE COWL SIDE TRIM SUB–ASSY LH**
   (See page 71–12)
3. **REMOVE INSTRUMENT PANEL SUB–ASSY UPPER**
   (See page 71–12)
4. **REMOVE INSTRUMENT PNL INSERT SUB–ASSY LWR LH(TMMK MADE)**
   (See page 71–12)

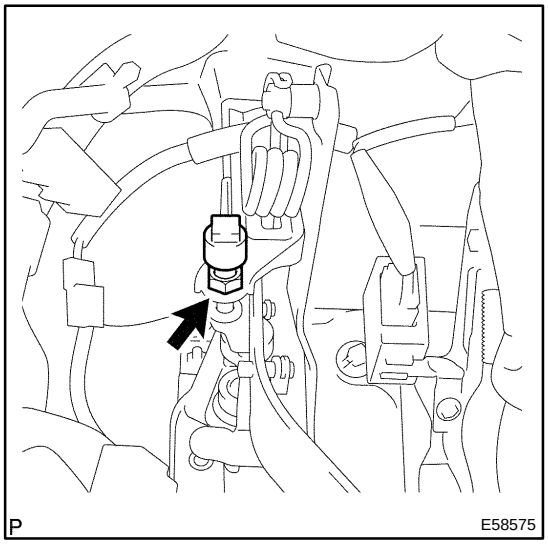

5. **REMOVE CLUTCH SWITCH ASSY**

(a) Disconnect the connector.
(b) Loosen the nut and remove the clutch switch assy.

STEERING PAD SWITCH

8201L–01

REPLACEMENT

1. **DISCONNECT BATTERY NEGATIVE TERMINAL(See page 60–1)**
2. **REMOVE STEERING WHEEL COVER LOWER NO.2**

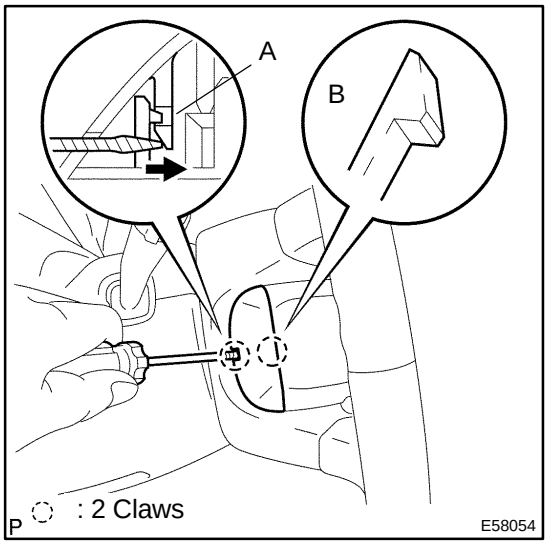

3. **REMOVE CONNECTOR COVER**

(a) Using a screwdriver, disengage the claw(A).

HINT:

Tape the screwdriver tip, before use.

(b) Disengage the claw(B) and remove the connector cover.

4. **REMOVE HORN BUTTON ASSY (See page 60–15)**

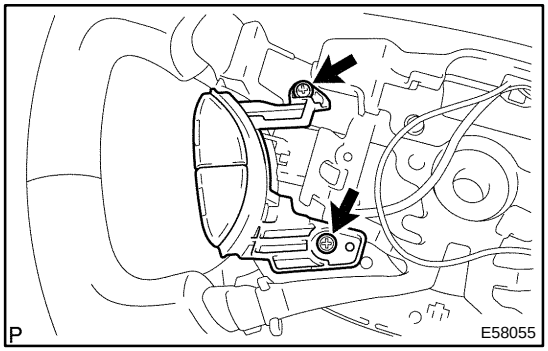

5. **REMOVE STEERING PAD SWITCH**

(a) Disconnect the connector.

(b) Remove the 2 screws and steering pad switch.

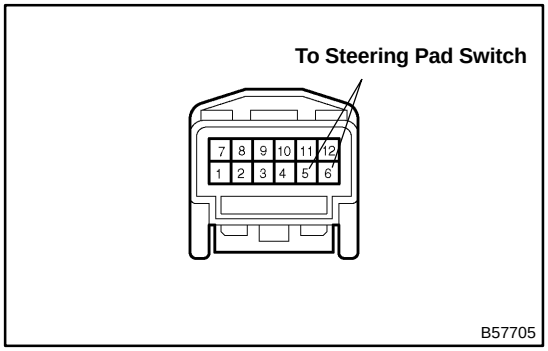

(c) Disengage the wiring 2 pins from the connector, and pull them out.

6. INSTALL HORN BUTTON ASSY
(See page 60–15)
7. INSPECT HORN BUTTON ASSY
(See page 60–15)
8. INSPECT SRS WARNING LIGHT

OUTSIDE VEHICLE

9900V–02

GENERAL MAINTENANCE

These are maintenance and inspection items which are considered to be the owner's responsibility. They can be done by the owner or they can have them done at a service shop.
These items include those which should be checked on a daily basis, those which, in most cases, do not require special tools and those which are considered to be reasonable for the owner to do. Items and procedures for general maintenance are as follows.

1. GENERAL NOTES

- Maintenance items may vary from country to country. Check the owner's manual supplement in which the maintenance schedule is shown.
- Every service item in the periodic maintenance schedule must be performed.
- Periodic maintenance service must be performed according to whichever interval in the periodic maintenance schedule occurs first, the odometer reading (miles) or the time interval (months).
- Maintenance service after the last period should be performed at the same interval as before unless noted.
- Failure to do even one of the items can cause the engine to run poorly and increase the exhaust emissions.

2. TIRES

(a) Check the pressure with a gauge. If necessary, make adjustment.
(b) Check for cuts, damage or excessive wear.

3. WHEEL NUTS

(a) When checking the tires, check the nuts for looseness or for missing nuts. If necessary, tighten them.

4. TIRE ROTATION (See page 28–1)

(a) Check the owner's manual supplement in which the maintenance schedule is shown.

5. WINDSHIELD WIPER BLADES

(a) Check for wear or cracks whenever they do not wipe clean. If necessary, replace them.

6. FLUID LEAKS

(a) Check the underneath of the vehicle for leaking fuel, oil, water or other fluid.
(b) If you smell gasoline fumes or notice any leak, find and correct the cause.

7. DOORS AND ENGINE HOOD

(a) Check that all the doors and the tailgate operate smoothly, and that all the latches lock securely.
(b) Check that the engine hood secondary latch prevents the hood from opening when the primary latch is released.

INSIDE VEHICLE

9900W–02

GENERAL MAINTENANCE

These are maintenance and inspection items which are considered to be the owner's responsibility. They can be done by the owner or they can have them done at a service shop.
These items include those which should be checked on a daily basis, those which, in most cases, do not require (special) tools and those which are considered to be reasonable for the owner to do. Items and procedures for general maintenance are as follows.

1. GENERAL NOTES

- Maintenance items may vary from country to country. Check the owner's manual supplement in which the maintenance schedule is shown.
- Every service item in the periodic maintenance schedule must be performed.
- Periodic maintenance service must be performed according to whichever interval in the periodic maintenance schedule occurs first, the odometer reading (miles) or the time interval (months).
- Maintenance service after the last period should be performed at the same interval as before unless noted.
- Failure to do even one of the items can cause the engine to run poorly and increase the exhaust emissions.

2. LIGHTS

(a) Check that the headlights, stop lights, taillights, turn signal lights, and other lights are all working.
(b) Check the headlight aiming.

3. WARNING LIGHTS AND BUZZERS

(a) Check that all the warning lights and buzzers function properly.

4. HORN

(a) Check that the horn works normally.

5. WINDSHIELD GLASS

(a) Check for scratches, pits or abrasions.

6. WINDSHIELD WIPER AND WASHER

(a) Check the operation of the wipers and washer.
(b) Check that the wipers do not streak.

7. WINDSHIELD DEFROSTER

(a) Check that air comes out from the defroster outlet when operating the heater or air conditioner at defroster mode.

8. REAR VIEW MIRROR

(a) Check that the rear view mirror is mounted securely.

9. SUN VISORS

(a) Check that the sun visors move freely and are mounted securely.

10. STEERING WHEEL

(a) Check that the steering wheel has the specified freeplay. Be alert for changes in steering condition, such as hard steering, excessive freeplay or strange noises.

11. SEATS

(a) Check that all the front seat controls such as seat adjusters, seatback recliner, etc. operate smoothly.
(b) Check that all the latches lock securely in any position.
(c) Check that the locks hold securely in any latched position.
(d) Check that the head restraints move up and down smoothly and that the locks hold securely in any latched position.
(e) For folding–down of the rear seat backs, check that the latches lock securely.

12. SEAT BELTS

(a) Check that the seat belt system such as the buckles, retractors and anchors operate properly and smoothly.

(b) Check that the belt webbing is not cut, frayed, worn or dameged.

13. ACCELERATOR PEDAL

(a) Check the pedal for smooth operation, uneven pedal effort or catching.

14. CLUTCH PEDAL (See page 42–7)

(a) Check the pedal for smooth operation.

(b) Check that the pedal has the proper freeplay.

15. BRAKE PEDAL (See page 32–6)

(a) Check the pedal for smooth operation.

(b) Check that the pedal has the proper reserve distance and freeplay.

(c) Check the brake booster function.

16. BRAKES

(a) At a safe place, check that the brakes do not pull to one side when applied.

17. PARKING BRAKE (See page 33–2)

(a) Check that the lever has the proper travel.

(b) On a safe incline, check that the vehicle is held securely with only the parking brake applied.

18. AUTOMATIC TRANSMISSION ”PARK” MECHANISM

(a) On a safe incline, check that the vehicle is held securely with the selector lever in the ”P” position and all the brakes released.

UNDER HOOD

9900X–02

GENERAL MAINTENANCE

1. GENERAL NOTES

- Maintenance items may vary from country to country. Check the owner's manual supplement in which the maintenance schedule is shown.
- Every service item in the periodic maintenance schedule must be performed.
- Periodic maintenance service must be performed according to whichever interval in the periodic maintenance schedule occurs first, the odometer reading (miles) or the time interval (months).
- Maintenance service after the last period should be performed at the same interval as before unless noted.
- Failure to do even one of the items can cause the engine to run poorly and increase the exhaust emissions.

2. WINDSHIELD WASHER FLUID

(a) Check that there is sufficient fluid in the tank.

3. ENGINE COOLANT LEVEL

(a) Check that the coolant level is between the "FULL" and "LOW" lines on the see–through reservoir.

4. RADIATOR AND HOSES

(a) Check that the front of the radiator is clean and not blocked by leaves, dirt or bugs.

(b) Check the hoses for cracks, kinks, rot or loose connections.

5. BATTERY ELECTROLYTE LEVEL

(a) Check that the electrolyte level of all the battery cells is between the upper and lower level lines on the case.

6. BRAKE FLUID LEVEL

(a) Check that the brake fluid levels are near the upper level line on the see–through reservoirs.

7. ENGINE DRIVE BELT

(a) Check the drive belt for fraying, cracks, wear or oiliness.

8. ENGINE OIL LEVEL

(a) Check the level on the dipstick with the engine turned off.

9. POWER STEERING FLUID LEVEL

(a) Check the level on the dipstick.

(b) The level should be in the "HOT" or "COLD" range depending on the fluid temperature.

10. AUTOMATIC TRANSMISSION FLUID LEVEL

(a) Park the vehicle on a level surface.

(b) With the engine idling and the parking brake applied, shift the selector into all the positions from "P" to "L", and then shift into the "P" position.

(c) Pull out the dipstick and wipe off the fluid with a clean shop rag. Re–insert the dipstick and check that the fluid level is in the "HOT" range.

(d) Perform this check with the fluid at the normal driving temperature (70 – 80˚C, 158 – 176˚F).

HINT:

Wait until the engine cools down (approx. 30 min.) before checking the fluid level after extended driving at high speed, in hot weather, in heavy traffic or pulling a trailer.

11. EXHAUST SYSTEM

(a) If any change in the sound of the exhaust or the smell of the exhaust fumes is noticed, locate and correct the cause.

ENGINE

ON–VEHICLE INSPECTION

9900Y–02

HINT:

Inspect these items when the engine is cold.

1. 1MZ–FE:
REPLACE TIMING BELT (See page 14–206)

2. INSPECT DRIVE BELT (2AZ–FE: See page 14–5, 1MZ–FE: See page 14–140)

3. REPLACE SPARK PLUGS (2AZ–FE: See page 18–1, 1MZ–FE: See page 18–3)

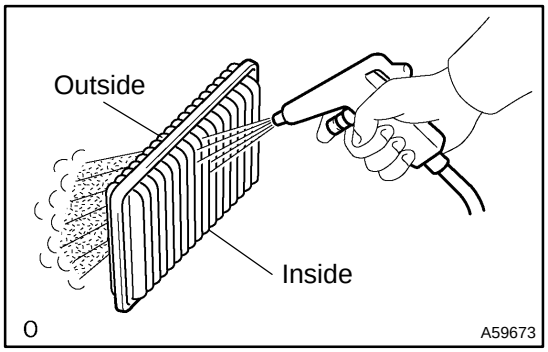

4. INSPECT AIR FILTER

(a) Remove the air filter.

(b) Visually check that the air filter is not excessively damaged or oily.

If necessary, replace the air filter.

(c) Clean the filter with compressed air.
First blow from the inside thoroughly, and then blow from the outside of the filter.

(d) Reinstall the air filter.

5. REPLACE AIR FILTER

(a) Replace the air filter with a new one.

6. REPLACE ENGINE OIL AND OIL FILTER
(2AZ–FE: See page 17–7, 1MZ–FE: See page 17–22)

7. REPLACE ENGINE COOLANT (2AZ–FE: See page 16–6, 1MZ–FE: See page 16–20)

8. INSPECT GASKET IN FUEL TANK CAP
(2AZ–FE: See page 12–1, 1MZ–FE: See page 12–11)

9. INSPECT FUEL LINES AND CONNECTIONS AND FUEL TANK VAPOR VENT SYSTEM HOSES AND FUEL TANK BANDS

(a) Visually check the fuel lines for cracks, leakage, loose connections, deformation or tank band looseness.

10. INSPECT EXHAUST PIPES AND MOUNTINGS

(a) Visually check the pipes, hangers and connections for severe corrosion, leaks or damage.

11. INSPECT VALVE CLEARANCE (2AZ–FE: See page 14–7, 1MZ–FE: See page 14–142)

BRAKE

ON–VEHICLE INSPECTION

9900Z–02

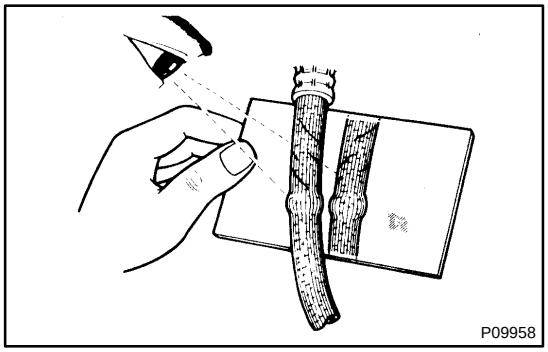

1. INSPECT BRAKE LINE PIPES AND HOSES

HINT:

Check in a well–lighted area. Check the entire circumference and length of the brake hoses using a mirror as required. Turn the front wheels fully right or left before checking the front brake.

(a) Check all the brake lines and hoses for:
- Damage
- Wear
- Deformation
- Cracks
- Corrosion
- Leaks
- Bends
- Twists

(b) Check all the clamps for tightness and connections for leakage.

(c) Check that the hoses and lines are clear of sharp edges, moving parts and the exhaust system.

(d) Check that the lines install in grommets pass through the center of the grommets.

2. INSPECT FRONT BRAKE PADS AND DISCS (See page 32–25)

3. INSPECT REAR BRAKE PADS AND DISCS (See page 32–33)

4. INSPECT REAR BRAKE LININGS AND DRUMS (See page 32–39)

5. INSPECT OR CHANGE BRAKE FLUID (See page 32–4)
Fluid: SAE J1703 or FMVSS No.116 DOT3

CHASSIS

9901A–01

ON–VEHICLE INSPECTION

1. INSPECT STEERING LINKAGE

(a) Check the steering wheel freeplay. (See page 50–3)

(b) Check the steering linkage for looseness or damage.

(1) Check that the tie rod ends do not have excessive play.

(2) Check that the dust seals and boots are not damaged.

(3) Check that the boot clamps are not loose.

2. INSPECT STEERING GEAR HOUSING OIL

(a) Check the steering gear housing for oil leakage.

If leakage is found, check and repair the cause.

3. INSPECT BALL JOINTS AND DUST COVERS

(a) Inspect the ball joints for excessive looseness.

(1) Jack up the front of the vehicle and place wooden blocks with a height of 180 – 200 mm (7.09 – 7.87 in.) under the front tires.

(2) Lower the jack until there becomes about half a load on the front coil spring. Place stands under the vehicle for safety.

(3) Check that the front wheels are pointing straight ahead, and block them with chocks.

(4) Using a lever, pry up the end of the lower arm, and check the amount of play.

Maximum ball joint vertical play: 0 mm (0 in.)

If there is any play, replace the ball joint.

(b) Check the dust cover for damage.

4. INSPECT DRIVE SHAFT BOOTS

(a) Check the drive shaft boots for clamp looseness, oil leakage or damage.

5. CHECK TRANSAXLE OIL (FLUID)

(a) Visually check the transaxle for oil (fluid) leakage.

If leakage is found, check and repair the cause.

6. ROTATE TIRES (See page 28–1)

BODY

9901B–01

ON–VEHICLE INSPECTION

1. Canada:

TIGHTEN BOLTS AND NUTS ON CHASSIS AND BODY

(a) Where necessary, tighten all the parts of the chassis.
- Front axle and suspension
- Drive train
- Rear axle and suspension
- Brake system
- Engine mounting, etc.

(b) Where necessary, tighten all the parts of the body.
- Seat belt system
- Seats
- Doors and hood
- Body mountings
- Fuel tank
- Exhaust pipe system, etc.

2. REPLACE AIR CONDITIONING FILTER

(a) Remove the glove compartment assembly.
(b) Remove the filter case from the filter outlet.
(c) Remove the filter from the filter case.
(d) Replace the filter with a new one.
(e) Installation is in the reverse order of removal.